•REVISED 03-2019: CHANGED U-BOLT CONNECTION TO IMPROVE CONSTRUCTABILITY. (U-BOLT DIMENSION "S" SHORTENED FROM $11\frac{1}{2}$" TO $5\frac{1}{2}$" FOR 50-100 FT TRUSS SPANS AND SHORTENED FROM 12" TO 6" FOR 105-130 FT TRUSS SPANS. U-BOLT THREAD LENGTH CHANGED FROM 3" TO $2\frac{1}{2}$". ELIMINATED HOLES IN W6 x 20 FLANGE FURTHEST FROM CHORD.) INCREASED MAXIMUM CANTILEVER LENGTH OF DMS RUNWAY SUPPORT BRACKET VERTICAL W6 x 20 MEMBER FROM 2'-6 TO 2'-9. MODIFIED HANDRAIL POST BASE PLATE FASTENER NOTE AND DETAIL K / SECTION N-N FASTENER NOTE TO ADDRESS CHANGE IN ASTM SPECIFICATIONS. ADDED DETAIL K FASTENER DETAIL TO IMPROVE CLARITY. UPDATED BRIDGE ENGINEER SIGNATURE.
•STEELOVERHEADSIGNTRUSS.DGN - SOST-13-11 - THIS SHEET ISSUED 03-2013.

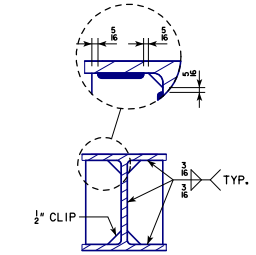

TYPICAL STIFFENER DETAIL

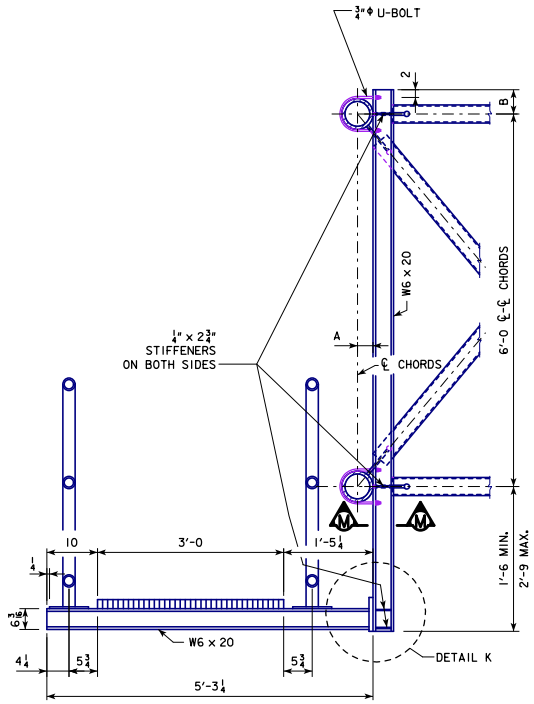

SECTION L-L
TYPICAL RUNWAY SECTION

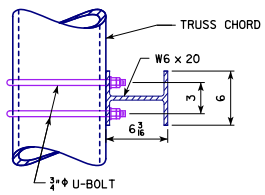

SECTION M-M

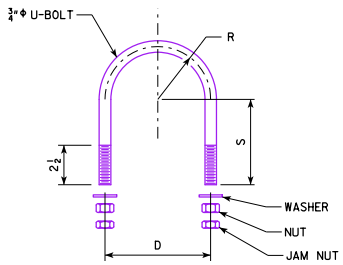

U-BOLT DETAIL

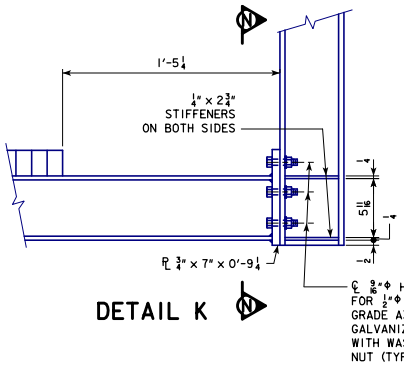

DETAIL K

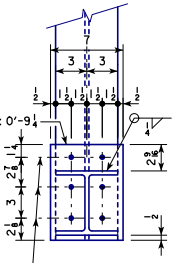

SECTION N-N
FASTENERS NOT SHOWN

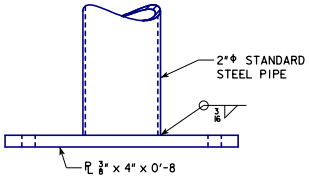

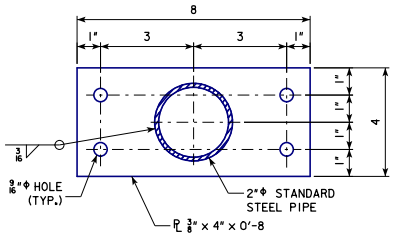

HANDRAIL POST BASE PLATE

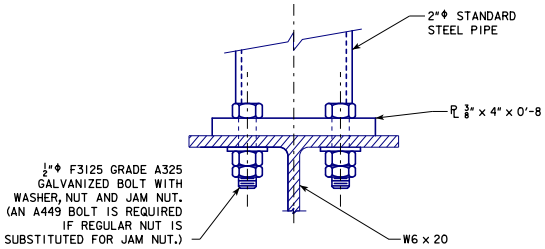

END ELEVATION OF
HANDRAIL POST BASE

DIMENSION TABLE

SPAN	TRUSS CHORD	A	B	U-BOLT DIMENSIONS		
				D	R	S
50' - 100'	5"Φ EXTRA-STRONG STEEL PIPE	$2\frac{25}{32}$	$5\frac{1}{4}$	$6\frac{7}{16}$	$3\frac{7}{32}$	$5\frac{1}{2}$
105' - 130'	6"Φ EXTRA-STRONG STEEL PIPE	$3\frac{5}{16}$	$5\frac{3}{4}$	$7\frac{1}{2}$	$3\frac{3}{4}$	6

SEE STANDARD SHEET SOST-12-11 FOR LOCATION OF SECTION L-L.

03-2019
LATEST REVISION DATE

APPROVED BY BRIDGE ENGINEER

IOWADOT Highway Division

STANDARD DESIGN

STEEL OVERHEAD SIGN TRUSS

SEPTEMBER, 2011

DMS RUNWAY DETAILS

50'-130' SPANS

SOST-13-11