PCC SIDEWALK
NHSN-018-7(65)--2R-19

LETTING DATE
12/19/2017

CHICKASAW Co.

INDEX OF SHEETS

No.	DESCRIPTION
A Sheets	**Title Sheets**
A.1	Title Sheet
A.2	Location Map Sheet
B Sheets	**Typical Cross Sections and Details**
B.1	Typical Cross Sections and Details
C Sheets	**Quantities and General Information**
C.1 - 2	Estimate Reference Information and Project Quantities
D Sheets	**Mainline Plan and Profile Sheets**
* D.1 - 6	Plan Sidewalk
G Sheets	**Survey Sheets**
G.1	Vertical Control, Reference Ties and Bench Marks
J Sheets	**Traffic Control and Staging Sheets**
J.1	Traffic Control Plan
L Sheets	**Geometric, Staking and Jointing Sheets**
L.1 - 2	Intersection Details
S Sheets	**Sidewalk Sheets**
* S .1	Sidewalk Legend & Symbol Information Sheet
* S .2 - 4	Sidewalk Plan Sheets
	* Color Plan Sheets

IOWA DOT

Highway Division

PLANS OF PROPOSED IMPROVEMENT ON THE

PRIMARY ROAD SYSTEM

CHICKASAW COUNTY

PCC SIDEWALK

In Fredericksburg (ADA - District 2)

SCALES: As Noted

Refer to the Proposal Form for list of applicable specifications.

Value Engineering Saves. Refer to Article 1105.15 of the Specifications.

REVISIONS

TOTAL	19
PROJECT IDENTIFICATION NUMBER	16-19-018-010
PROJECT NUMBER	NHSN-018-7(65)--2R-19
R.O.W. PROJECT NUMBER	

For Project Location Map
Refer to Sheet A.2

IOWA ONE CALL
1-800-292-8989
www.iowaonecall.com
811 Know what's below. Call before you dig.

LICENSED PROFESSIONAL ENGINEER
JEROD P. GROSS
16018
IOWA

I hereby certify that this engineering document was prepared by me or under my direct personal supervision and that I am a duly licensed Professional Engineer under the laws of the State of Iowa.

Jerod P. Gross 10/12/2017

Jerod P. Gross, P.E. Date

License Number 16018

My License Renewal Date is December 31, 2017

Pages or sheets covered by this seal:
A.1-A.2, B.1, C.1-C.2, D.1-D.6, G.1, J.1, L.1-L.2, S.1-S.4

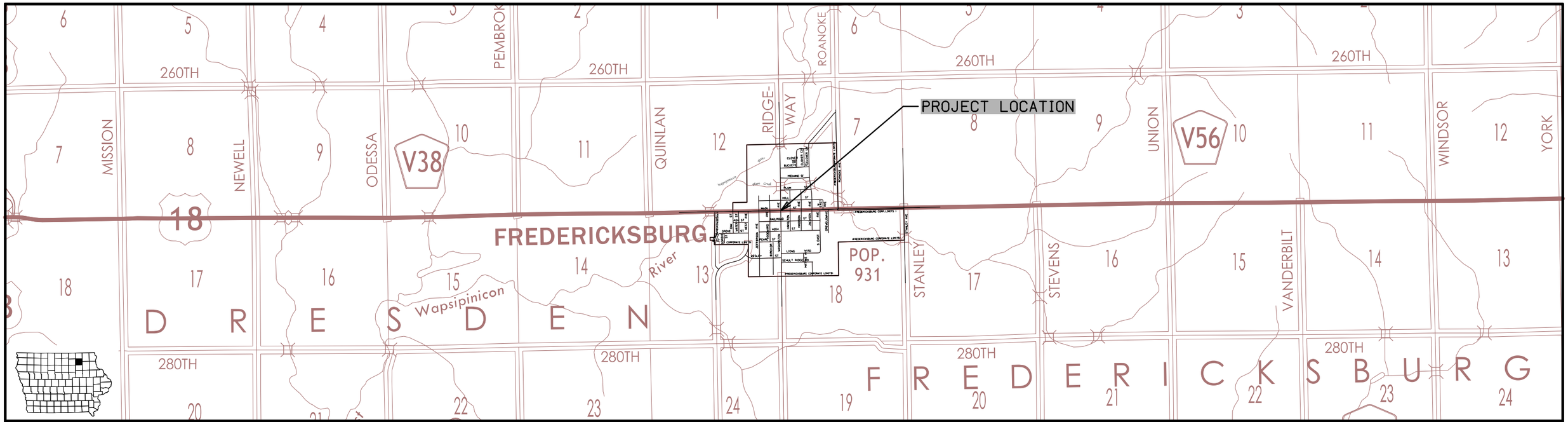

Not to Scale

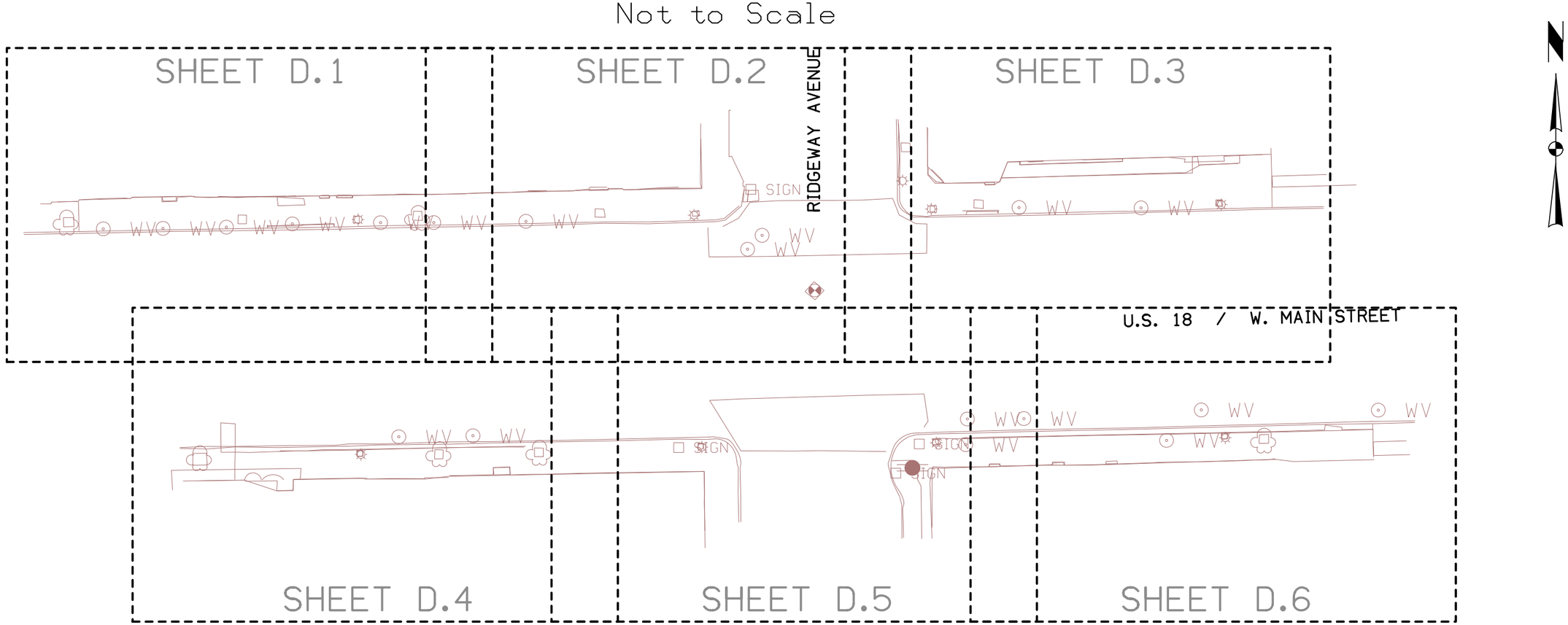

FILE NO.	ENGLISH	DESIGN TEAM SNYDER & ASSOCIATES	CHICKASAW COUNTY	PROJECT NUMBER NHSN-018-7(65)--2R-19	SHEET NUMBER A.2

4:24:47 PM 10/12/2017 JSUNDQUIST J:\2012_projects\112.0800N\Cadd\Design\00000611a01.sht

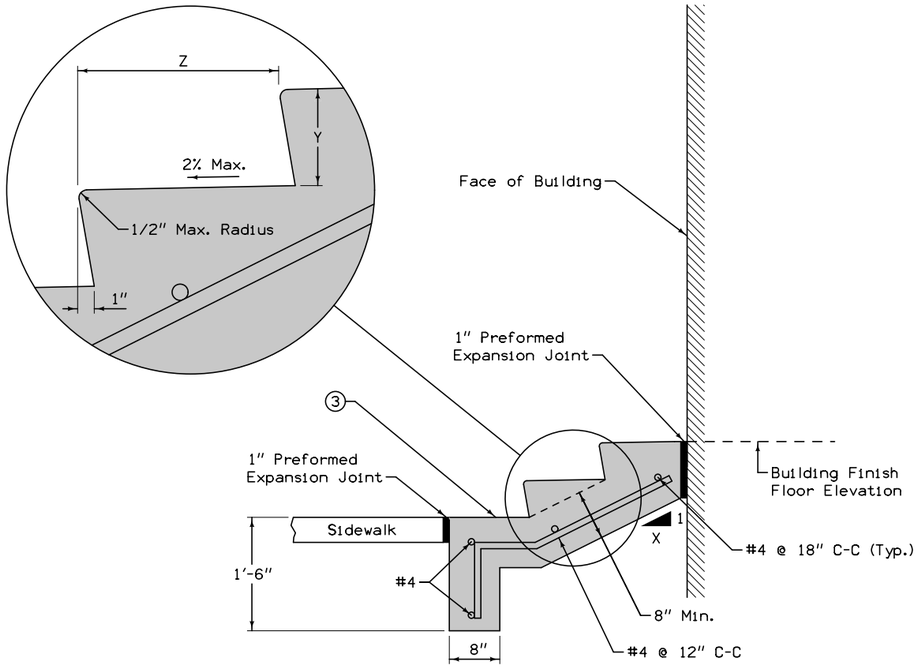

	Rise 1	Tread 2
X	Y	Z
2	6"	12"
3	5"	15"
4	4"	16"

Provide a minimum of 2 inches of cover for all reinforcing. Ensure all risers are an equal height and all treads are an equal depth within a flight of stairs.

1 Minimum riser height is 4 inches. Maximum riser height is 7 inches.

2 Minimum tread depth is 11 inches.

3 Construct cross to match adjacent sidewalk.

DETAIL 1: CONCRETE STEPS

Not to Scale

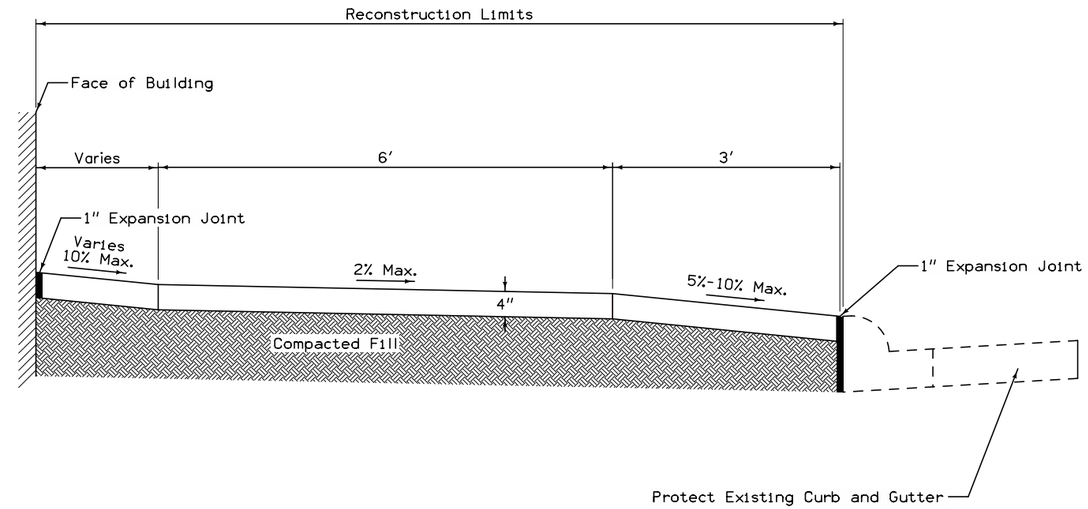

DETAIL 3: TYPICAL SIDEWALK DETAIL

Not to Scale

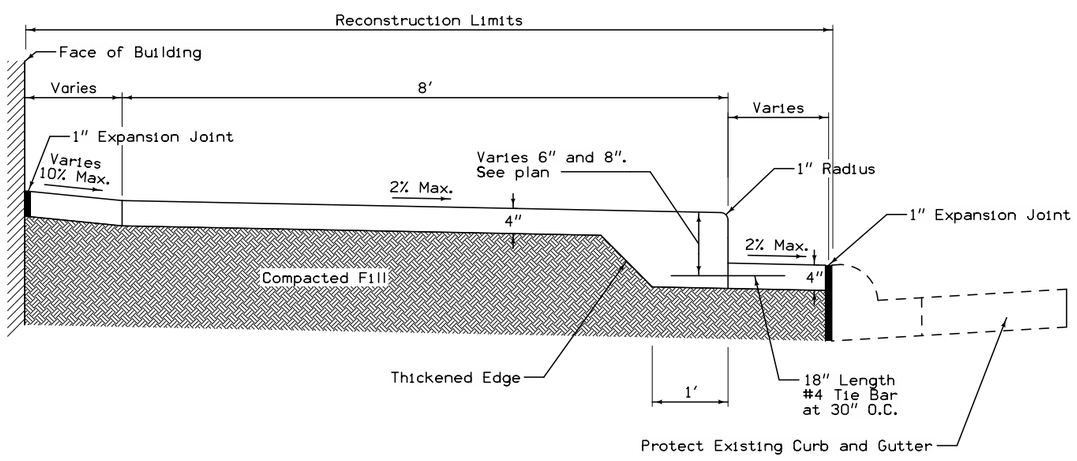

DETAIL 2: DOUBLE CURB SIDEWALK

Not to Scale

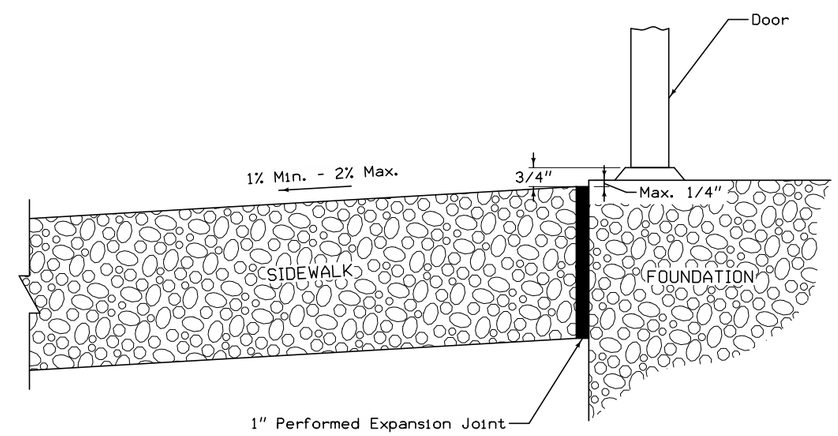

DETAIL 4: DOORWAY ENTRANCE

Not to Scale

100-0A
10-28-97

ESTIMATED ROADWAY QUANTITIES
(1 DIVISION PROJECT)

Item No.	Item Code	Item	Unit	Total	As Built Qty.
1	2102-2710070	EXCAVATION, CLASS 10, ROADWAY AND BORROW	CY	62.0	
2	2401-6745635	REMOVAL OF EXISTING HANDRAIL	LS	1.0	
3	2510-6745850	REMOVAL OF PAVEMENT	SY	173.0	
4	2511-6745900	REMOVAL OF SIDEWALK	SY	945.8	
5	2511-7526004	SIDEWALK, P.C. CONCRETE, 4 IN.	SY	604.7	
6	2511-7526006	SIDEWALK, P.C. CONCRETE, 6 IN.	SY	28.4	
7	2511-7528101	DETECTABLE WARNINGS	SF	58.0	
8	2524-6765010	REMOVE AND REINSTALL SIGN AS PER PLAN	EACH	3.0	
9	2526-8285000	CONSTRUCTION SURVEY	LS	1.0	
10	2527-9263112	PAINTED PAVEMENT MARKINGS, HIGH-BUILD WATERBORNE	STA	5.3	
11	2528-8445110	TRAFFIC CONTROL	LS	1.0	
12	2528-8445113	FLAGGER	EACH		
13	2529-5070110	PATCHES, FULL-DEPTH FINISH, BY AREA	SY	114.5	
14	2529-5070120	PATCHES, FULL-DEPTH FINISH, BY COUNT	EACH	4.0	
15	2533-4980005	MOBILIZATION	LS	1.0	
16	2599-9999005	CONCRETE STEPS	EACH	10.0	
17	2599-9999018	SIDEWALK, P.C. CONCRETE 4 IN., DOUBLE CURB	SY	380.3	
18	2601-2634105	MULCHING, BONDED FIBER MATRIX	ACRE	0.1	
19	2601-2636044	SEEDING AND FERTILIZING (URBAN)	ACRE	0.1	
20	2602-0000309	PERIMETER AND SLOPE SEDIMENT CONTROL DEVICE, (9")	LF	1500.0	
21	2602-0000350	REMOVAL OF PERIMETER AND SLOPE SEDIMENT CONTROL DEVICE	LF	1500.0	

105-4
10-18-11

STANDARD ROAD PLANS

The following Standard Road Plans apply to construction work on this project.

Number	Date	Title
EC-204	04-18-17	Perimeter and Slope Sediment Control Devices
MI-220	10-20-15	Detectable Warnings and Pedestrian Ramp
PM-110	04-16-13	Line Types
PR-102	04-21-15	Full Depth PCC Patch without Dowels
PV-101	10-17-17	Joints
PV-102	10-18-16	PCC Curb Details
SI-881	10-17-17	Special Signs for Workzones
TC-1	04-16-13	Work Not Affecting Traffic (Two-Lane or Multi-Lane)
TC-202	04-21-15	Work Within 15 ft of Traveled Way
TC-212	04-16-13	Spot Location Lane Closure with Flaggers
TC-419	04-19-16	Lane Closure on Undivided Highway
TC-601	10-18-11	Pedestrian Detour

110-5
MODIFIED

SIDEWALK REMOVAL

* Not a bid item

Street	Quadrant	Area	Saw Cut*	Remarks
		SY	LF	
U.S. 18 / Ridgeway Ave	NW	308.0	20.0	
U.S. 18 / Ridgeway Ave	NE	176.4	106.0	
U.S. 18 / Washington Ave	SE	223.6	8.0	
U.S. 18 / Washington Ave	SW	237.8	30.0	
	Total	945.8	164.0	

100-1D
10-18-05

PROJECT DESCRIPTION

This project involves the reconstruction of the downtown City of Fredericksburg block to meet current ADA guidelines.

100-4A
10-29-02

ESTIMATE REFERENCE INFORMATION

Item No.	Item Code	Description
1	2102-2710070	EXCAVATION, CLASS 10, ROADWAY AND BORROW Includes all necessary earthwork for the curb return and sidewalk improvements. Refer to D, L, and S Sheets for details.
2	2401-6745635	REMOVAL OF EXISTING HANDRAIL Refer to D Sheets for location.
3	2510-6745850	REMOVAL OF PAVEMENT Refer to Tab 110-1. Includes composite roadway pavement and curb and gutter.
4	2511-6745900	REMOVAL OF SIDEWALK Refer to Tab 110-5.
5	2511-7526004	SIDEWALK, P.C. CONCRETE, 4 IN.
6	2511-7526006	SIDEWALK, P.C. CONCRETE, 6 IN.
7	2511-7528101	DETECTABLE WARNINGS Refer to Tab 113-1.
8	2524-6765010	REMOVE AND REINSTALL SIGN AS PER PLAN Remove signs and store in safe location. Reinstall in designated location following sidewalk construction. Any damage to signs shall be reparied at the Contractor's expense. Each sign/post combination removed/reinstalled will be counted once and paid for at the contract unit price for each.
9	2526-8285000	CONSTRUCTION SURVEY Item is for construction staking at locations required on Tab 113-10 in the S Sheets.
10	2527-9263112	PAINTED PAVEMENT MARKINGS, HIGH-BUILD WATERBORNE Refer to Tab 108-22 for quantities.
11	2528-8445110	TRAFFIC CONTROL See Traffic Control Plan on Sheet J.1.
13	2529-5070110	PATCHES, FULL-DEPTH FINISH, BY AREA
14	2529-5070120	PATCHES, FULL-DEPTH FINISH, BY COUNT Refer to Tab 102-6C. Place BT-3 joints around perimeter of all patches. Place L-2 joint at locations of existing joints or cracks in adjacent pavement. Curb and gutter within patching area is included in patching quantities, refer to D and L Sheets for locations and details.
16	2599-9999005	CONCRETE STEPS Includes all material, labor, and equipment to construct concrete steps for building entrances. Refer to Sheet B.1 for typcial and D Sheets for locations. The contractor will be paid the contract unit price for each concrete step installed.
17	2599-9999018	SIDEWALK, P.C. CONCRETE 4 IN., DOUBLE CURB Includes all material, labor, and equipment to construct the double curb along the southwest and southeast quadrants of the U.S. 18 and Washingtion Avenue intersection. Refer to B Sheet for typical and D Sheets for locations. The contractor will be paid the contract unit price per square yard of sidewalk paved.
18	2601-2634105	MULCHING, BONDED FIBER MATRIX Mulch all areas designated for seeding, at a minimum rate of 3,000 lb / acre.
19	2601-2636044	SEEDING AND FERTILIZING (URBAN) For all areas designated by the Engineer. Seed and fertilize prior to mulching. Prepare seed, fertilize, and seed according to Article 2601.03, C, 4 of the Standard Specifications. Use ground driven equipment.
20	2602-0000309	PERIMETER AND SLOPE SEDIMENT CONTROL DEVICE, (9")
21	2602-0000350	REMOVAL OF PERIMETER AND SLOPE SEDIMENT CONTROL DEVICE For placement behind back of curb throughout the project limits. All material removed shall become property of the Contractor.

112-4
MODIFIED

CURBS AND RAISED ISLANDS

Refer to PV-20, PV-102, and 6000s Detail Series.

(1) Bid Item

Street	Quadrant	Offset	Island Interior Area (1)	Curb and Gutter			Remarks
				Curb Type	Gutter Width	Length (1)	
			SY		FT	LF	
U.S. 18 / Ridgeway Ave	NW			4" Standard PCC	2.5	46.0	Refer to L Sheets for details
U.S. 18 / Ridgeway Ave	NE			4" Standard PCC	2.5	49.0	Refer to L Sheets for details
U.S. 18 / Washington Ave	SE			6" Standard PCC	2.5	52.0	Refer to L Sheets for details
U.S. 18 / Washington Ave	SW			4" Standard PCC	2.5	53.0	Refer to L Sheets for details
					Total	200.0	

290-02
04-21-15

SMALL QUANTITY CONCRETE TESTING

- Test air and slump once per 30 cy placed, or minimum of once per day.
- Verification gradations will not be required for this project. However, the Contractor will be expected to provide certified plant inspection.
- The Contractor has the option of using the following minimum opening times in lieu of flexural testing:
  - 48 hours for pedestrian traffic
  - 72 hours for curb and gutter or patching

290-01
04-15-14

SIDEWALK CONSTRAINTS

1. Widths:
   Widths listed in the S sheets are minimums.

2. Cross Slopes:
   Construct all sidewalks, curb ramps, and landings/turning spaces at a target cross slope of 1.5%. Cross slopes exceeding 2.0% will not be allowed, except for areas tying into existing pavement. In these areas, transition from existing pavement cross slope to a cross slope of less than 2.0% within one panel at a rate not to exceed 1.0% per foot.

3. Longitudinal Slopes:
   a. Sidewalk:
      i. Roadway slope exceeds 5.0%: Sidewalk longitudinal slope exceeding the roadway slope by more than 2.0% will not be allowed.
      ii. Roadway slope 5.0% or less: Sidewalk longitudinal slope exceeding 5.0% will not be allowed.
   b. Ramps:
      i. Ramps 15.0’ in length or less: Longitudinal slope exceeding 8.3% will not be allowed.
      ii. Ramps greater than 15.0’ in length: Construct with the longitudinal slope necessary to conform to the design.

4. Landing/Turning Spaces:
   Longitudinal and Transverse slopes exceeding 2.0% will not be allowed.

110-1
MODIFIED

REMOVAL OF PAVEMENT

Refer to Tabulation 102-5

* Not a Bid Item

Street	Quadrant	Side	Pavement Type	Area (SY)	Saw Cut* (LF)	Remarks
U.S. 18 / Ridgeway Ave	NW		Composite	38.3	66.0	
U.S. 18 / Ridgeway Ave	NE		Composite	44.1	69.0	
U.S. 18 / Washington Ave	SE		Composite	40.0	74.0	
U.S. 18 / Washington Ave	SW		Composite	50.6	74.0	
			Total:	173.0	283.0	

113-1
MODIFIED

SIDEWALKS

See MI-220 and S Sheets

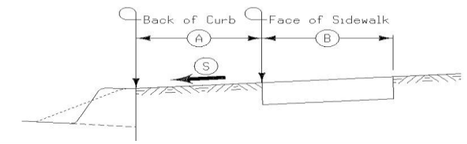

Street	Quadrant	Side	A (FT)	B (FT)	S (%)	4" PCC Sidewalk (SY)	6" PCC Sidewalk (SY)	4" PCC with Double Curb (SY)	Detectable Warnings (SF)	Remarks
U.S. 18 / Ridgeway Ave	NW					313.1	6.1		18	
U.S. 18 / Ridgeway Ave	NE					189.6	6.3		10	
U.S. 18 / Washington Ave	SE					21.9	10.2	198.7	10	
U.S. 18 / Washington Ave	SW					80.1	5.7	181.6	20	
					Total	604.7	28.4	380.3	58	

102-6C
MODIFIED

FULL-DEPTH PATCHES

Refer to Standard Roads Plans PR-101, PR-102, PR-103, PR-104 and PR-140.

Location: Street	Quadrant	Lane (L, R, or B)	Dimension: Length (FT)	Width (FT)	Patch Thickness (IN)	PCC Patches: With Dowels (PR-103) (SY)	Without Dowels (PR-102) (SY)	C R C (PR-104) (SY)	HMA Patches (SY)	Composite HMA (TON)	Subbase Patches (PR-140) (SY)	Subbase Patch w/ 'EF' Joint (PR-101) (SY)	Patch Subdrain (PR-101 or PR-140) (No.)	'BT-3' Joints (No.)	'CT' Joints (No.)	'EF' Joints (PR-101) (No.)	Anchor Lugs Removal (No.)	Remarks
U.S. 18 / Ridgeway Ave	NW				10.0		27.9							26				
U.S. 18 / Ridgeway Ave	NE				10.0		26.5							27				
U.S. 18 / Washington Ave	SE				10.0		29.3							29				
U.S. 18 / Washington Ave	SW				10.0		30.7							29				
				Total:			114.5							111				

108-22
MODIFIED

PAVEMENT MARKING LINE TYPES

See PM-110

*BCY4 - Place on the same side of the roadway to match existing markings near the project.
**NPY4 - For estimating purposes only. No Passing Zone Lines will be located in the field.
***MNY4 - Factor of 1.00 as value includes number of 4-inch passes to cover median nose area.

STY6: Standard Curb 6" (Yellow) @ 3.03
DCY4: Double Centerline (Yellow) @ 2.00
NPY4: No Passing Zone Line (Yellow) @ 1.25
BLW4: Broken Lane Line (White) @ 0.25
ELW4: Edge Line Right (White) @ 1.00
ELY4: Edge Line Left (Yellow) @ 1.00

Location: Street	Quadrant	Dir. of Travel	Marking Type	Side: L	C	R	Length by Line Type (Unfactored): STY6 (STA)	DCY4 (STA)	NPY4** (STA)	BLW4 (STA)	ELW4 (STA)	ELY4 (STA)										Remarks
U.S. 18 / Ridgeway Ave	NW		Highbuild Waterborne Paint				0.43															
U.S. 18 / Ridgeway Ave	NE		Highbuild Waterborne Paint				0.43															
U.S. 18 / Washington Ave	SE		Highbuild Waterborne Paint				0.43															
U.S. 18 / Washington Ave	SW		Highbuild Waterborne Paint				0.44															
			Factored Total: Highbuild Waterborne Paint				5.24	-	-	-	-	-	-	-	-	-	-	-	-	-	-	
			Bid Quantity: Painted Pavement Markings, Highbuild Waterborne							5.24												

Key Notes:

1. Protect Buildings
2. Protect Tree
3. Protect Pole Footing
4. Field Verify Existing Conditions. Remove and replace Building Step if not Integral with Building Foundation. Protect otherwise. Refer to B-Sheet for Step Detail Typical.
5. Remove Wooden Stairs and Replace with PCC Steps. Refer to B-Sheet for Step Typical.
6. Remove and replace at least 2 Panels to ensure Designated ADA Pedestrian Path meets Iowa DOT ADA Design Standards.
7. Protect All Curb Stops.
8. See Detail 3 on Sheet B.1.

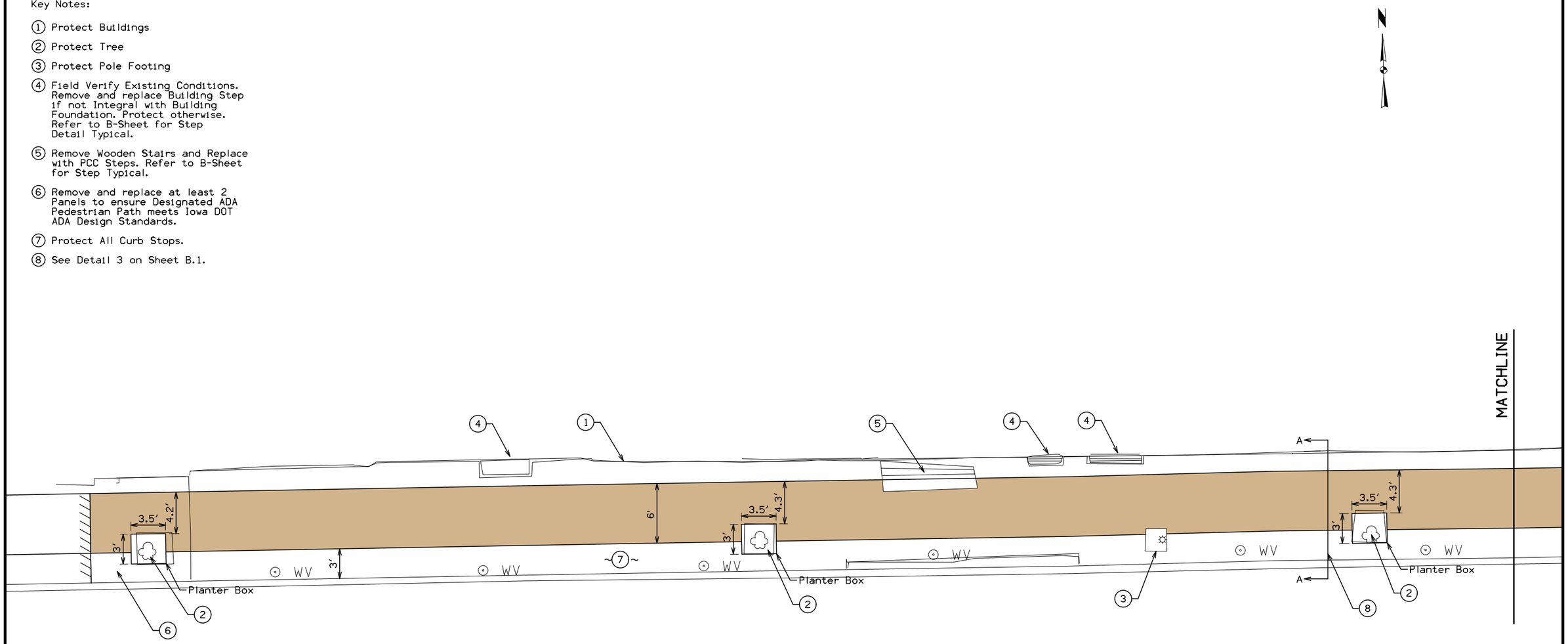

Legend

Designated ADA Pedestrian Path

Full Depth Sawcut

U.S. 18 / W. MAIN STREET

0 FEET 5

FILE NO.	ENGLISH	DESIGN TEAM SNYDER & ASSOCIATES	CHICKASAW COUNTY	PROJECT NUMBER NHSN-018-7(65)--2R-19	SHEET NUMBER D.1

4:26:27 PM 10/13/2017 J:\2012_projects\112.0800N\Cadd\Design\00000611d01.sht

Key Notes:

1. Protect Buildings
2. Protect Pole
3. Protect Stoops
4. Remove Existing Pavement and Replace with Full Depth PCC Pavement
5. Protect All Curb Stops
6. Remove and Reinstall Sign.
7. See Detail 3 on SHeet B.1.

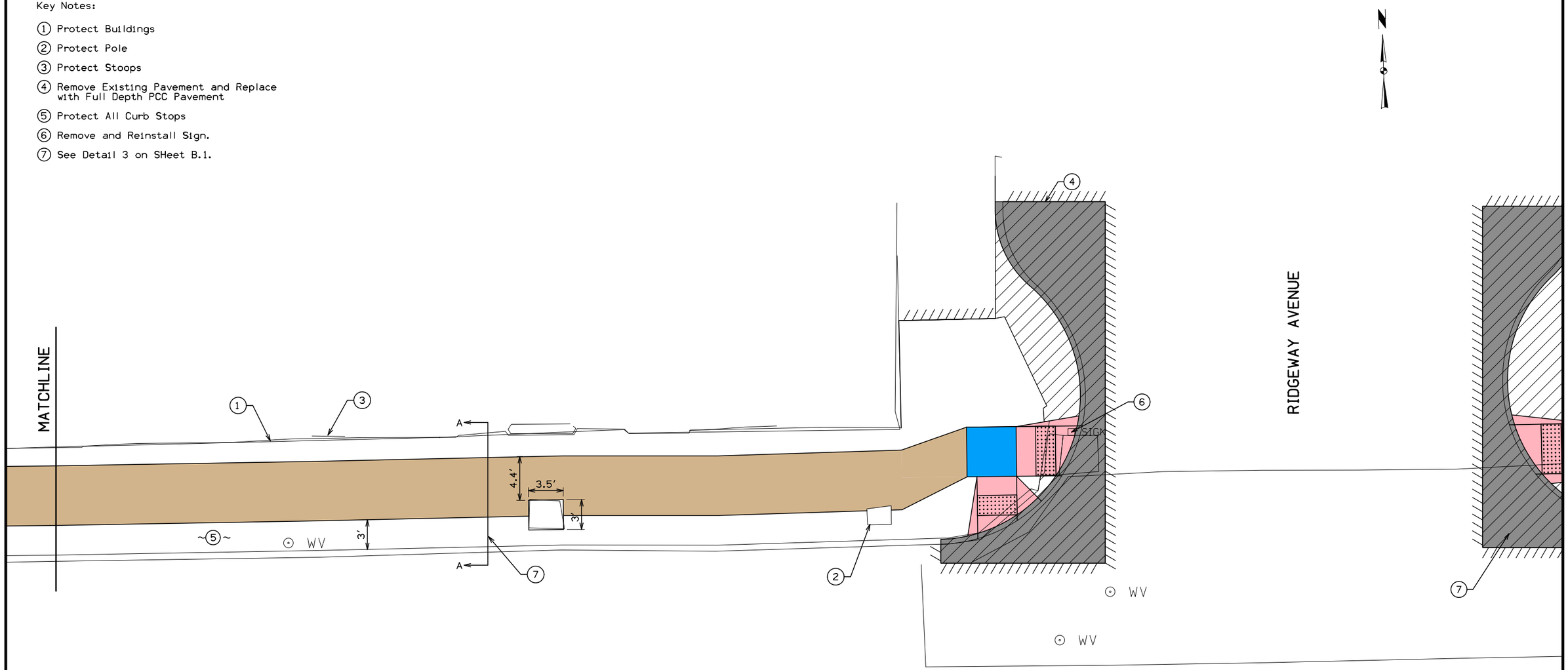

Legend

- Designated ADA Pedestrian Path
- Pavement Removals
- PCC Full Depth
- Full Depth Sawcut

U.S. 18 / W. MAIN STREET

0 5 FEET

Refer to L Sheets for Curb Geometry Details

Refer to S Sheets for Curb Ramp Staking Information

FILE NO.	ENGLISH	DESIGN TEAM SNYDER & ASSOCIATES	CHICKASAW COUNTY	PROJECT NUMBER NHSN-018-7(65)--2R-19	SHEET NUMBER D.2

4:26:28 PM 10/13/2017 J:\2012_projects\112.0800N\Cadd\Design\00000611d01.sht

Key Notes:

1. Protect Buildings
2. Protect Tree
3. Protect Pole/Footing
4. Remove Pavement Along Joint and Protect Existing Pavement.
5. Protect All Curb Stops
6. Remove at least 2 Panels to ensure Designated ADA Path meets Iowa DOT ADA Design Standards.
7. Protect Steps

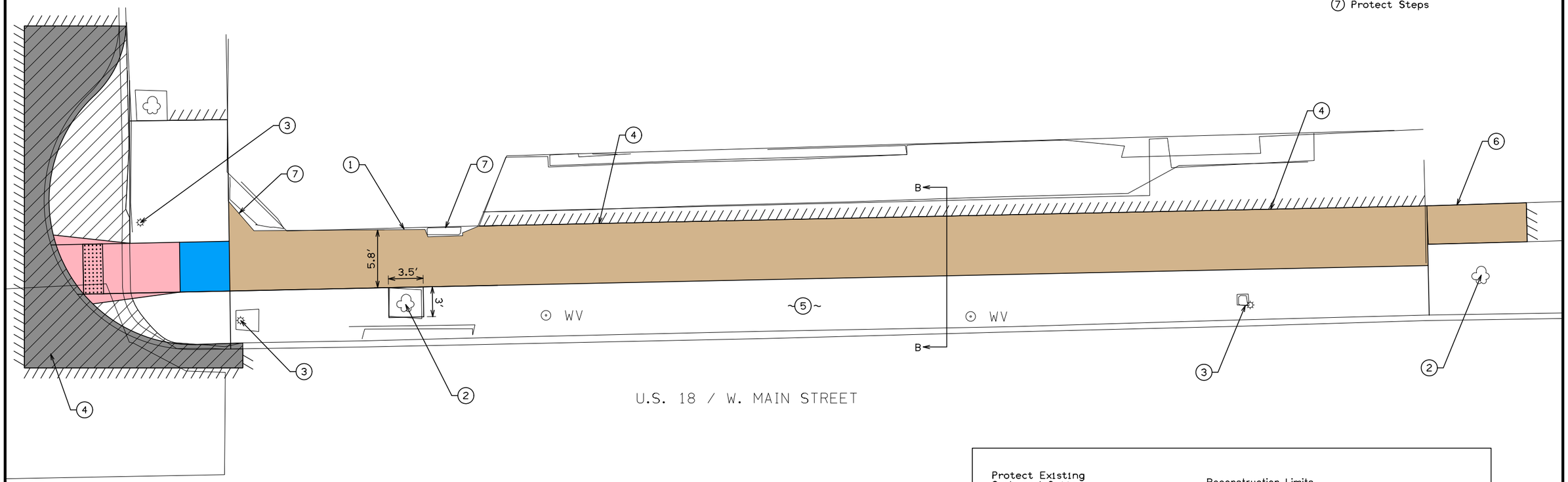

Legend

- Designated ADA Pedestrian Path
- Pavement Removals
- PCC Full Depth
- Full Depth Sawcut

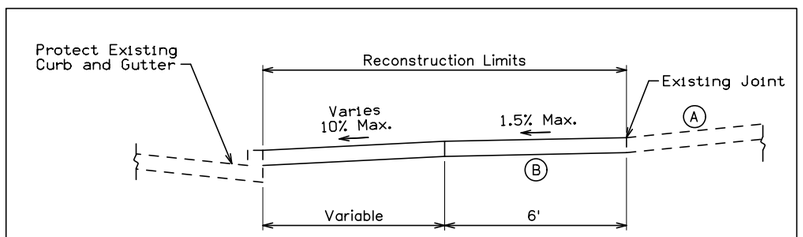

Section B-B

A Protect Existing Pavement

B Designated ADA Pedestrian Path. Refer to Detail 3 on B.1 Sheet for Sidewalk Typical.

Sidewalk Cross Section

Not to Scale

0 FEET 5

Refer to L Sheets for Curb Geometry Details

Refer to S Sheets for Curb Ramp Staking Information

FILE NO.	ENGLISH	DESIGN TEAM SNYDER & ASSOCIATES	CHICKASAW COUNTY	PROJECT NUMBER NHSN-018-7(65)--2R-19	SHEET NUMBER D.3

4:26:28 PM 10/13/2017 J:\2012_projects\112.0800N\Cadd\Design\00000611d01.sht

U.S. 18 / W. MAIN STREET

Key Notes:

1. Protect Buildings
2. Protect Tree
3. Protect Pole Footing
4. Field Verify Existing Conditions. Remove and replace Building Step if not Integral with Building Foundation. Protect otherwise. Refer to B.1 Sheet for Step Detail Typical.
5. Protect All Curb Stops
6. Do not remove Pavement
7. Remove at least 2 Panels to ensure Designated ADA Path meets Iowa DOT ADA Design Standards.
8. See Detail 2 on Sheet B.1.

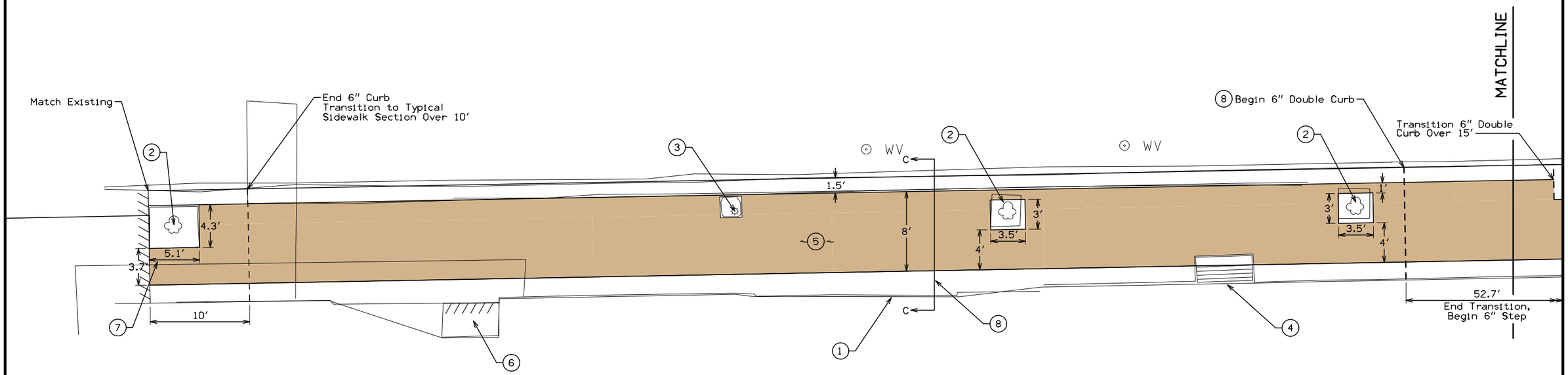

Legend

Designated ADA Pedestrian Path

Full Depth Sawcut ///

0 5 FEET

FILE NO.	ENGLISH	DESIGN TEAM SNYDER & ASSOCIATES	CHICKASAW COUNTY	PROJECT NUMBER NHSN-018-7(65)--2R-19	SHEET NUMBER D.4

4:26:28 PM 10/13/2017 J:\2012_projects\112.0800N\Cadd\Design\00000611d01.sht

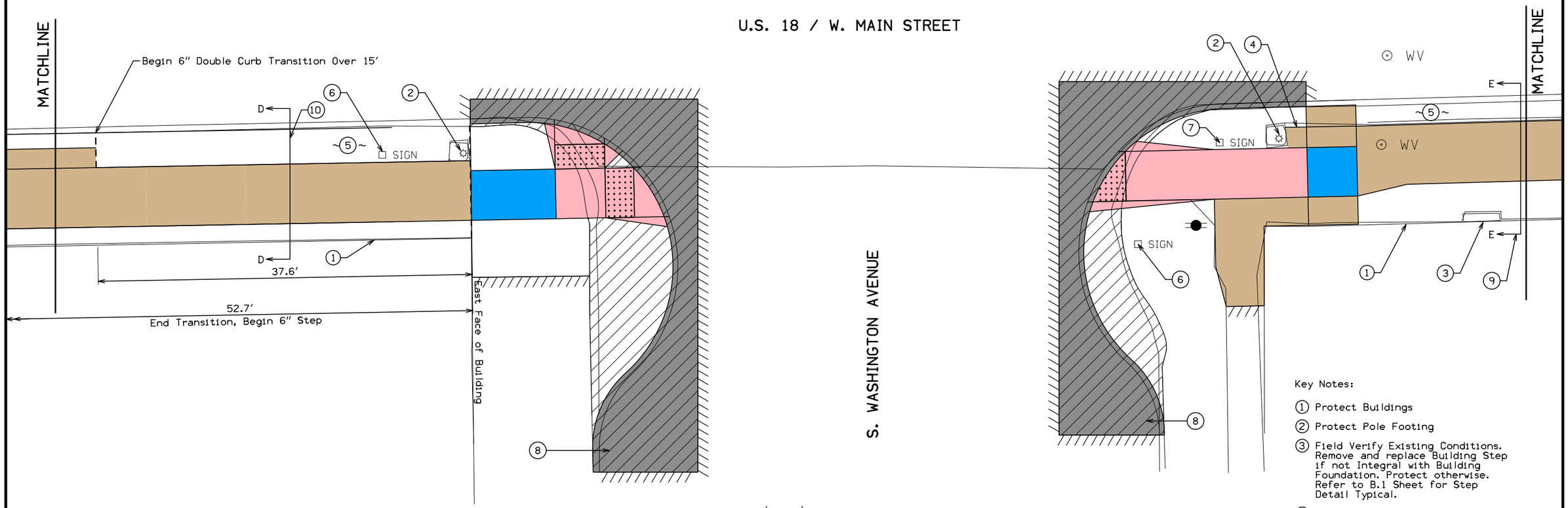

Key Notes:

1. Protect Buildings
2. Protect Pole Footing
3. Field Verify Existing Conditions. Remove and replace Building Step if not Integral with Building Foundation. Protect otherwise. Refer to B.1 Sheet for Step Detail Typical.
4. End 8" Step at Light Pole Footing
5. Protect All Curb Stops
6. Protect Sign
7. Remove and Reinstall Sign
8. Remove Existing Pavement and Replace with Full Depth PCC Pavement.
9. See Detail 2 on Sheet B.1.
10. See Detail 3 on Sheet B.1.

Legend

- Designated ADA Pedestrian Path
- Pavement Removals
- PCC Full Depth
- Full Depth Sawcut

0 5 FEET

Refer to L Sheets for Curb Geometry Details

Refer to S Sheets for Curb Ramp Staking Information

FILE NO.	ENGLISH	DESIGN TEAM SNYDER & ASSOCIATES	CHICKASAW COUNTY	PROJECT NUMBER NHSN-018-7(65)--2R-19	SHEET NUMBER D.5

U.S. 18 / W. MAIN STREET

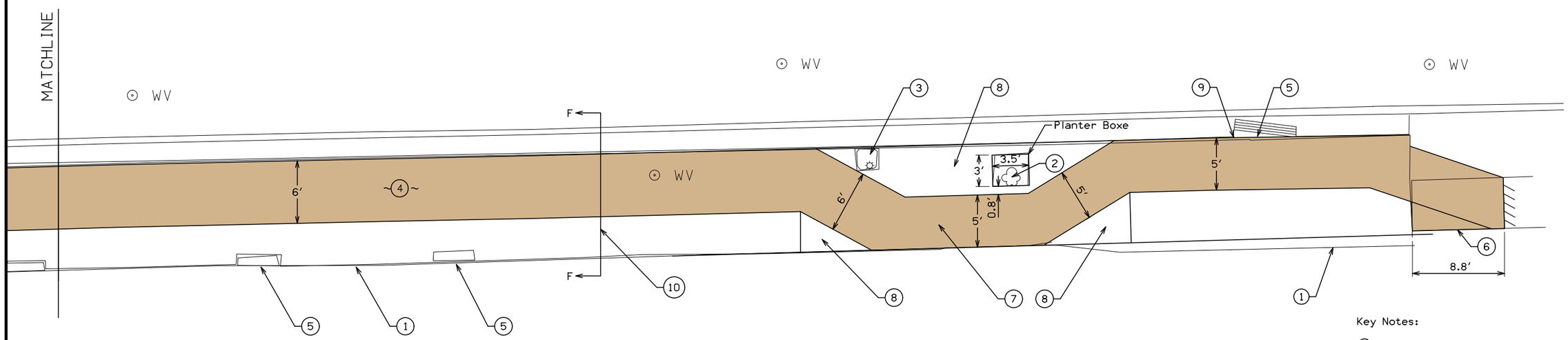

Key Notes:

1. Protect Buildings
2. Protect Tree
3. Protect Pole Footing
4. Protect All Curb Stops
5. Field Verify Existing Conditions. Remove and replace Building Step if not Integral with Building Foundation. Protect otherwise. Refer to B.1 Sheet Detail 1 for Step Detail Typical.
6. Remove Replace Existing Sidewalk. Ensure Sidewalk meets Iowa DOT ADA Design Standard.
7. Narrow Designated ADA Pedestrian Path to 5' Wide.
8. Special Shaping
9. Remove Handrail
10. See Detail 2 on Sheet B.1

Legend

Designated ADA Pedestrian Path

Full Depth Sawcut ///

0 5 FEET

FILE NO.	ENGLISH	DESIGN TEAM SNYDER & ASSOCIATES	CHICKASAW COUNTY	PROJECT NUMBER NHSN-018-7(65)--2R-19	SHEET NUMBER D.6

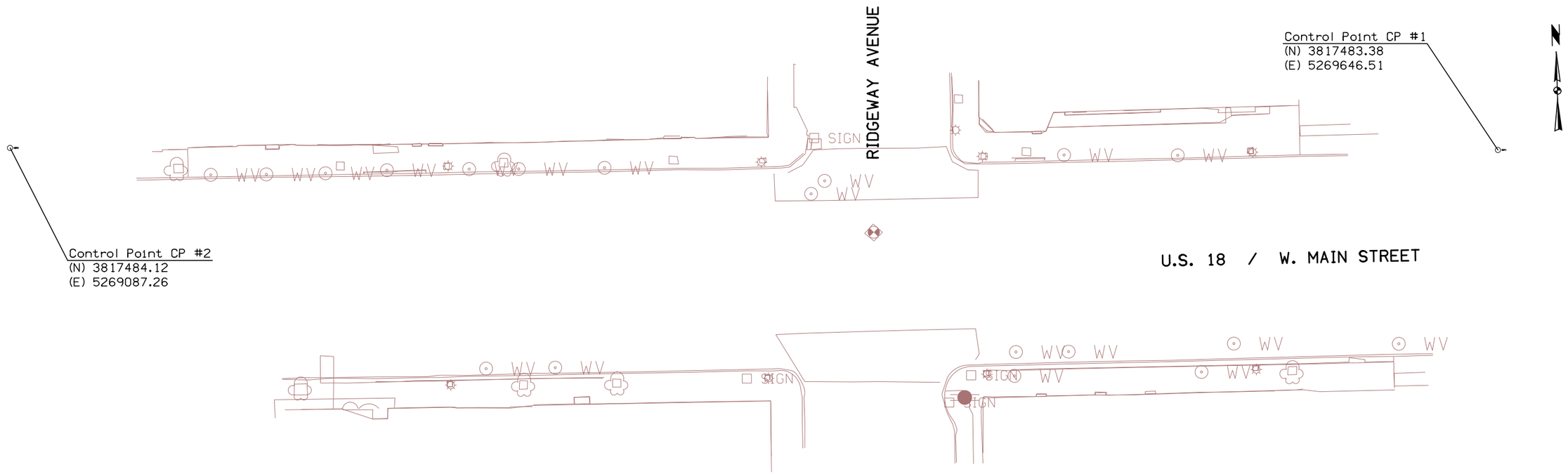

CONTROL POINTS:

CP #1 - Center of Nut of Curb Stop in Sidewalk South of Post Office and ±5′ West of Light Pole.

CP #2 - Set PK Nail South of Community Center in Sidewalk Joint ±2′ East of Flag Pole.

BENCHMARKS:

BM #1 - "Cut X" Hydrant Bolt at Southwest Corner of Community Center and North of U.S. 18 / Main Street.

0 FEET 20

FILE NO.	ENGLISH	DESIGN TEAM SNYDER & ASSOCIATES	CHICKASAW COUNTY	PROJECT NUMBER NHSN-018-7(65)--2R-19	SHEET NUMBER G.1

TRAFFIC CONTROL PLAN

All routes are to remain open to traffic.

Coordinate work with adjacent businesses.

Maintain all current traffic control conditions with temporary signage, as required, until permanent signage has been reinstalled.

Only 4 continuous blocks will be permitted to be under construction at a time. These may include:
- One block of sidewalk being excavated and removed.
- One block of sidewalk being prepared for pouring, preparing of subgrade, and forming.
- One block of sidewalk being placed.
- One block of sidewalk being finished, including seeding and soil preparation.
- Lane closures as necessary will be per the TC-series of Standard Road Plans shown elsewhere.

Note:

All Dimensions From Back of Curb Unless Otherwise Noted.

Circular Curve Data						
Name	Δ	D	T	L	E	R
Curve 1	137° 39′ 17″	35° 8′ 36″	37.44	34.84	25.65	14.50
Curve 2	49° 20′ 28″	212° 57′ 28″	4.59	8.61	1.00	10.00
Curve 3	44° 48′ 17″	212° 57′ 28″	4.12	7.82	0.82	10.00
Curve 4	137° 43′ 24″	35° 8′ 36″	37.50	34.85	25.71	14.50

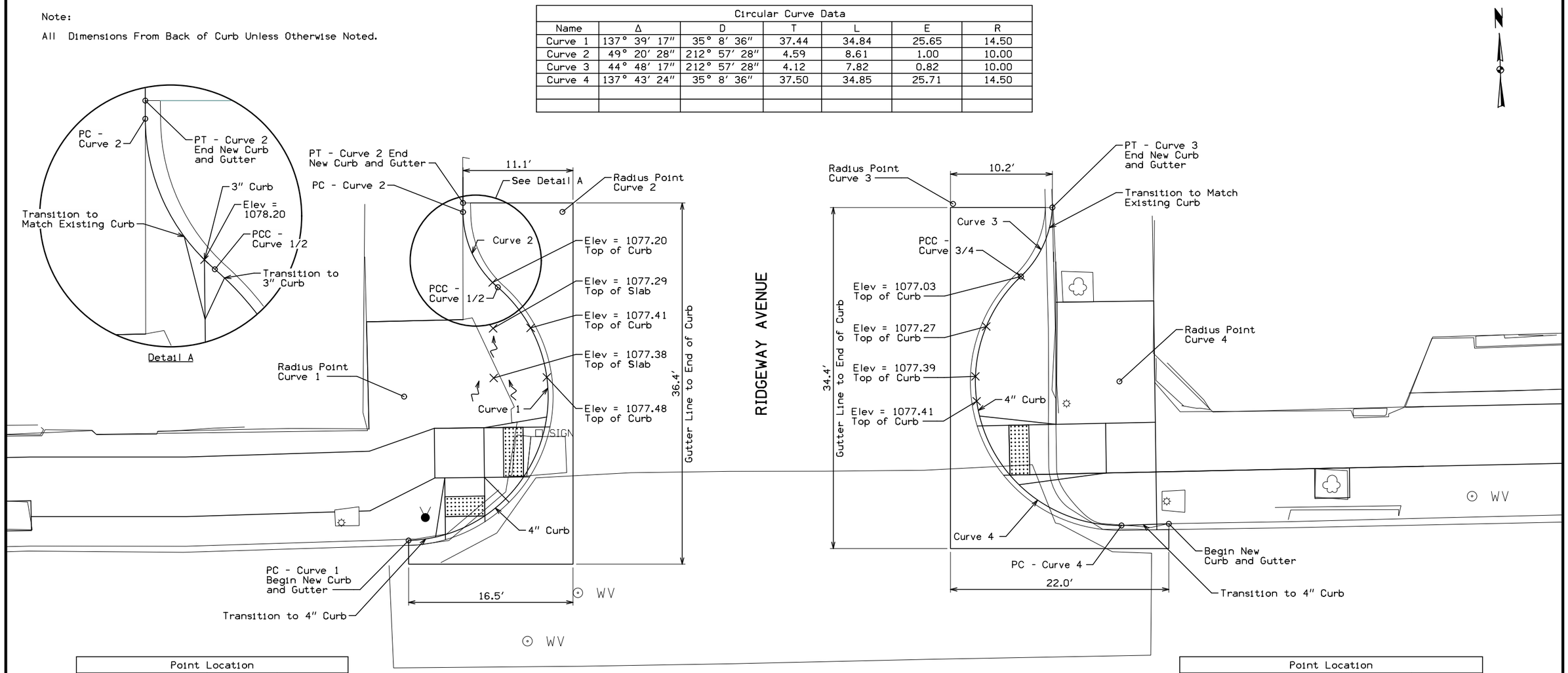

Point Location		
Name	X	Y
PC - Curve 2	5269381.92	3817510.06
Radius Point Curve 2	5269391.92	3817510.07
PCC - Curve 1/2	5269385.41	3817502.48
Radius Point Curve 1	5269375.98	3817491.46
PC - Curve 1	5269376.44	3817476.97

Point Location		
Name	X	Y
PT - Curve 3	5269441.23	3817510.51
Radius Point Curve 3	5269431.24	3817510.87
PCC - Curve 3/4	5269438.08	3817503.57
Radius Point Curve 4	5269447.99	3817492.99
PC - Curve 4	5269448.20	3817478.49
Begin New Curb and Gutter	5269452.97	3817478.65

U.S. 18 / W. MAIN STREET

0 20 FEET

FILE NO.	ENGLISH	DESIGN TEAM SNYDER & ASSOCIATES	CHICKASAW COUNTY	PROJECT NUMBER NHSN-018-7(65)--2R-19	SHEET NUMBER L.1

4:24:51 PM 10/12/2017 JSUNDQUIST J:\2012_projects\112.0800N\Cadd\Design\00000611L01.sht

U.S. 18 / W. MAIN STREET

Note:

All Dimensions From Back of Curb Unless Otherwise Noted.

Circular Curve Data						
Name	Δ	D	T	L	E	R
Curve 1	139° 22′ 36″	35° 8′ 36″	39.17	35.27	27.27	14.50
Curve 2	49° 07′ 54″	212° 57′ 28″	4.57	8.58	1.00	10.00
Curve 3	136° 28′ 24″	35° 8′ 36″	36.32	34.54	24.61	14.50
Curve 4	48° 59′ 33″	212° 57′ 28″	4.56	8.55	0.99	10.00

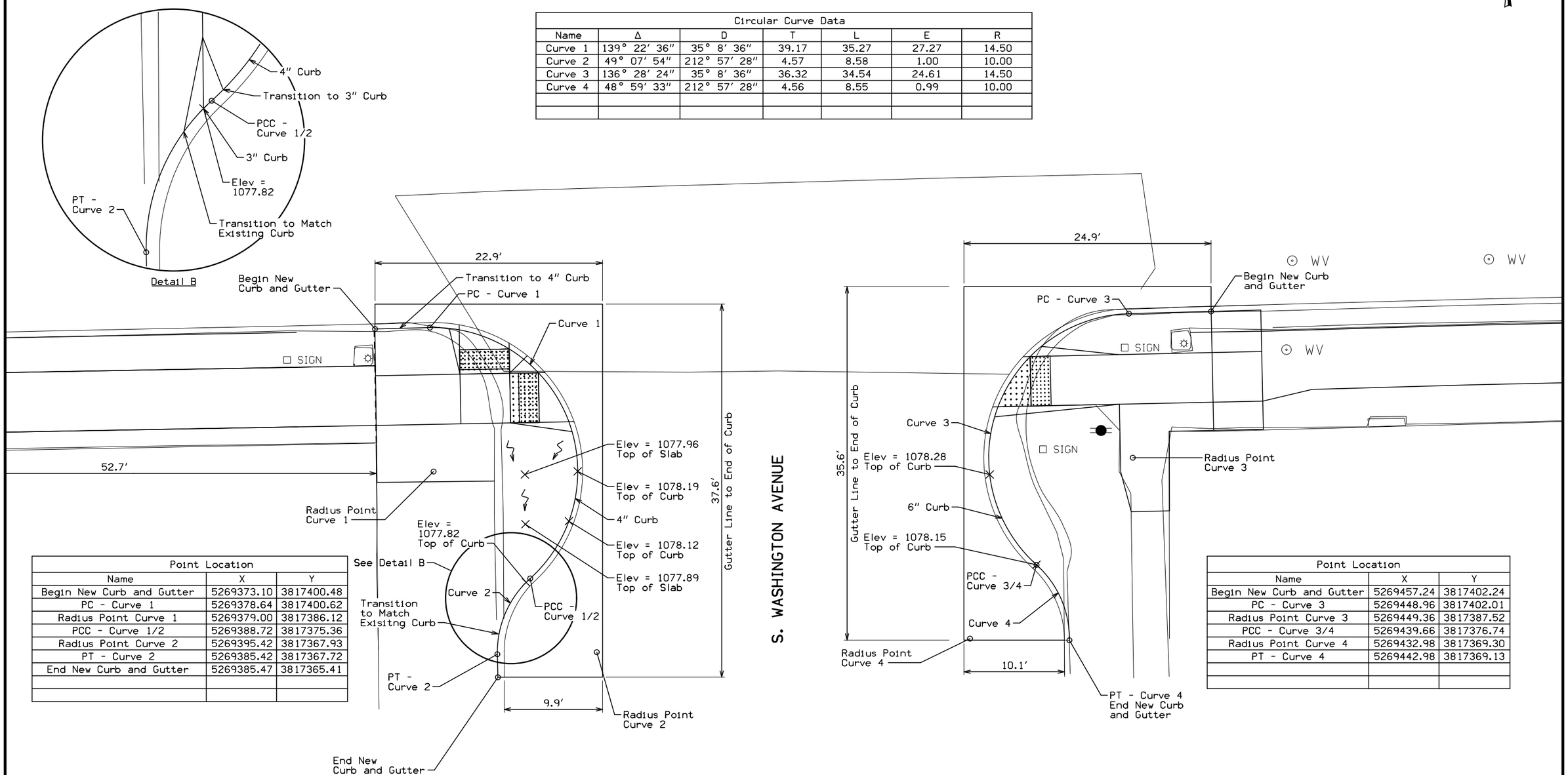

Point Location		
Name	X	Y
Begin New Curb and Gutter	5269373.10	3817400.48
PC - Curve 1	5269378.64	3817400.62
Radius Point Curve 1	5269379.00	3817386.12
PCC - Curve 1/2	5269388.72	3817375.36
Radius Point Curve 2	5269395.42	3817367.93
PT - Curve 2	5269385.42	3817367.72
End New Curb and Gutter	5269385.47	3817365.41

Point Location		
Name	X	Y
Begin New Curb and Gutter	5269457.24	3817402.24
PC - Curve 3	5269448.96	3817402.01
Radius Point Curve 3	5269449.36	3817387.52
PCC - Curve 3/4	5269439.66	3817376.74
Radius Point Curve 4	5269432.98	3817369.30
PT - Curve 4	5269442.98	3817369.13

FILE NO.	ENGLISH	DESIGN TEAM SNYDER & ASSOCIATES	CHICKASAW COUNTY	PROJECT NUMBER NHSN-018-7(65)--2R-19	SHEET NUMBER L.2

4:24:51 PM 10/12/2017 JSUNDQUIST J:\2012_projects\112.0800N\Cadd\Design\00000611L01.sht

SURVEY SYMBOLS

- MH Utility Access (Manhole)
- IN Storm Sewer Intake
- FHD Fire Hydrants
- SIGN SI Sign
- TDC Tree Deciduous
- PLG Location of General Photo
- BLD Building or Foundation
- LIN Miscellaneous Line
- TP TPD Telephone Pedestal
- PPA Power Pole Co. 1
- PR Electic Riser Pole
- LUM Luminaire
- MIS Miscellaneous
- WV WV Water Valve
- RET Retaining Walls
- Flg FLG Flag Poles
- COS Square Bridge Pier Column
- GDL Guard Rail Steel
- COR Round Bridge Pier Column
- SIGN SL Speed Limit Sign
- GP GP Guard Post (Less Than 4 Posts)
- SWK Sidewalk
- GU Gutter In Front of Curb
- CU Back of Curb
- CON Concrete or A/C Slab
- EP Edge of Paved Roads (ML or SR)
- EG Edge of Gravel Road

UTILITY LEGEND

PLAN VIEW COLOR LEGEND OF PLAN AND PROFILE SHEETS

LINEWORK	Design Color No.	
Green	(2)	Existing Topographic Features and Labels
Blue	(1)	Proposed Alignment, Stationing, Tic Marks, and Alignment Annotation
Magenta	(5)	Existing Utilities

SHADING	Design Color No.	
Tan	(8)	Proposed Sidewalk Shading
Blue, Light	(230)	Proposed Sidewalk Landing Shading
Pink	(11)	Proposed Sidewalk Ramp Shading
Magenta	(5)	Detectable Warning
Yellow	(4)	Highlight for Critical Notes or Features
Red	(3)	Delineates Restricted Areas
Lavender	(9)	Temporary Pavement Shading
Gray, Light	(48)	Proposed Pavement Shading
Gray, Med	(80)	Proposed Granular Shading
Gray, Dark	(112)	Proposed Grade and Pave Shading
Brown, Light	(236)	Grading Shading

- Reference Point
- Station
- Survey Line
- Section Corner
- Ground Line Intercept
- Saw Cut
- Guardrail
- Clearing & Grubbing Area
- Pavement Removal

RIGHT-OF-WAY LEGEND

- Proposed Right-of-Way
- Existing and Proposed Right-of-Way
- Easement and Existing Right-of-Way
- Borrow
- Easement (Temporary)
- Easement
- Excess
- A/C Access Control

SIDEWALK LEGEND AND SYMBOL INFORMATION SHEET

(COVERS SHEET SERIES S)

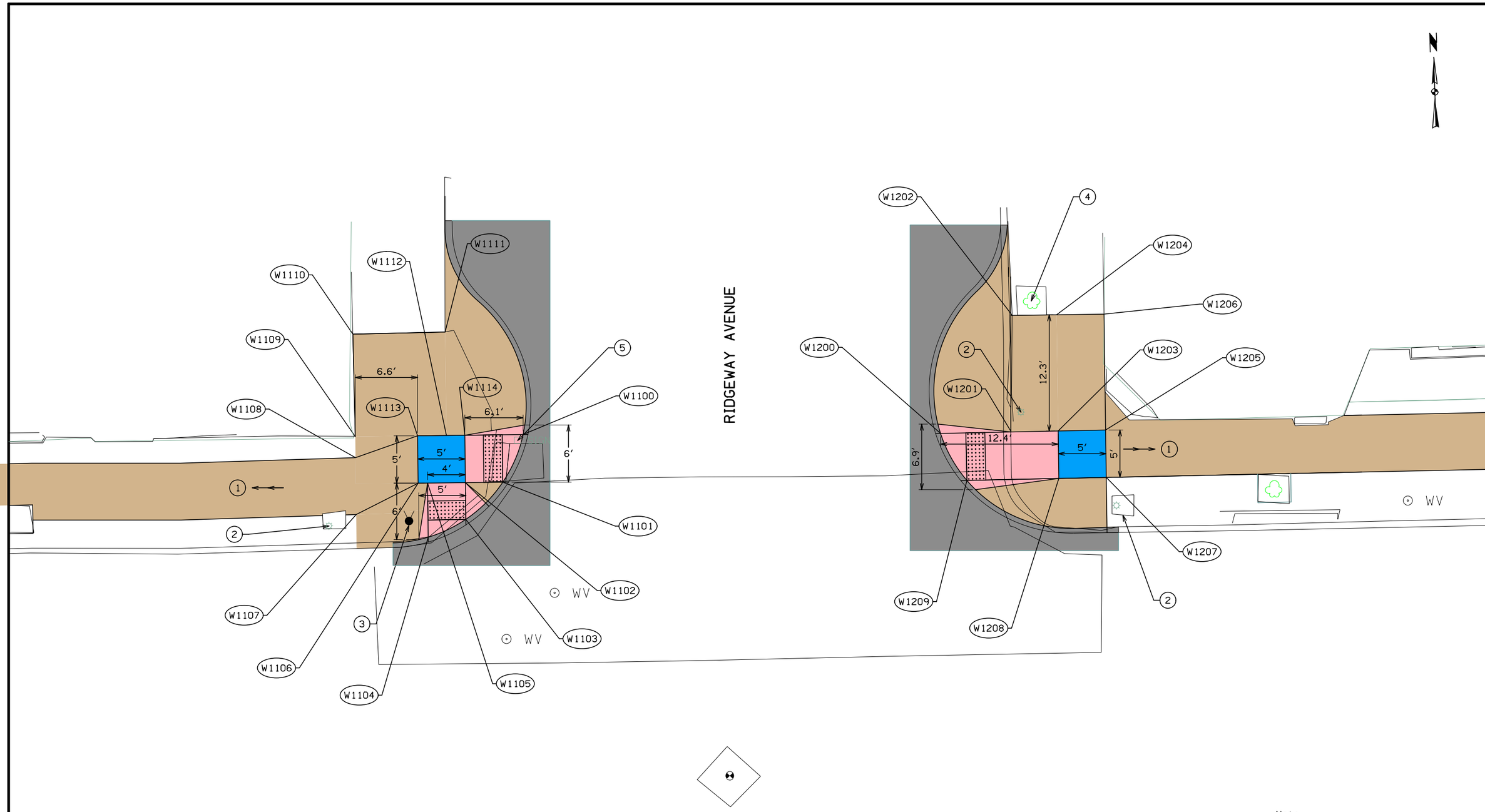

U.S. 18 / W. MAIN STREET

0 FEET 5

Note:

1. Refer to D Sheets
2. Protect Light Pole and Footing
3. Protect Fire Hydrant
4. Protect Tree
5. Remove and Reinstall Sign

FILE NO.	ENGLISH	DESIGN TEAM SNYDER & ASSOCIATES	CHICKASAW COUNTY	PROJECT NUMBER NHSN-018-7(65)--2R-19	SHEET NUMBER S.2

4:24:52 PM 10/12/2017 JSUNDQUIST J:\2012_projects\112.0800N\Cadd\Design\00000611s2.sht

U.S. 18 / W. MAIN STREET

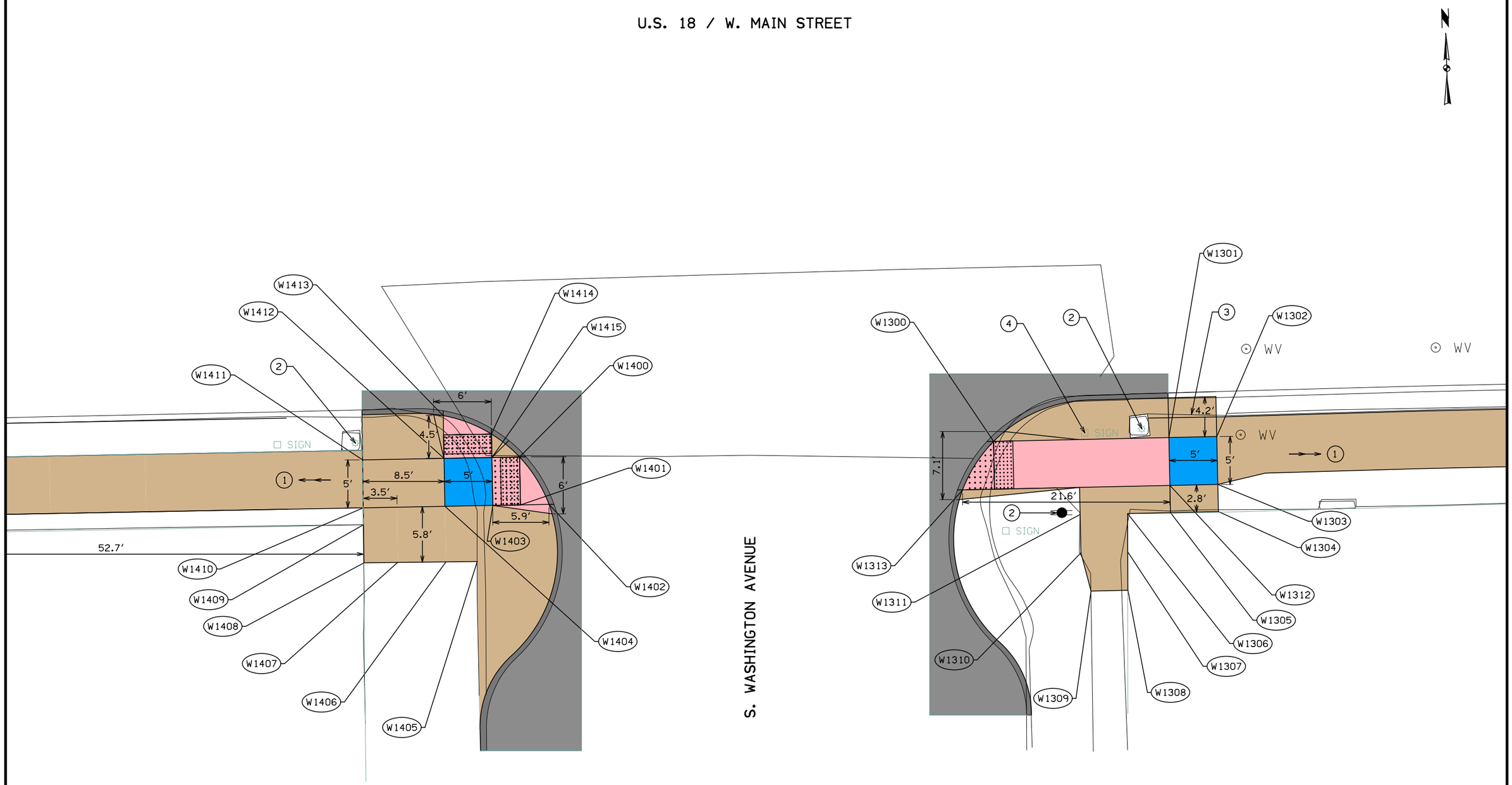

Note:

1. Refer to D Sheets
2. Protect Light Pole and Footing
3. Continue 8" Step to Light Pole Footing
4. Remove and Reinstall Sign

0 FEET 5

FILE NO.	ENGLISH	DESIGN TEAM SNYDER & ASSOCIATES	CHICKASAW COUNTY	PROJECT NUMBER NHSN-018-7(65)--2R-19	SHEET NUMBER S.3

4:24:53 PM 10/12/2017 JSUNDQUIST J:\2012_projects\112.0800N\Cadd\Design\00000611s2.sht

SIDEWALK COMPLIANCE

See S Sheets

* Does not include curb
(1) Staking required by Contracting Authority per Article 2511.03 of the Standard Specifications.

Point to Point		Sidewalk Designation	Distance*	Δ Elevation	Slope	Acceptable Constructed Range	Staking Required on this Quadrant? (1)	Measured Slope	Initials	Remarks		FOR INFORMATION ONLY: VALUES USED TO DETERMINE DESIGNED SLOPES			
			FT	FT	%	Pos. or Neg.		%				Point	Station	Offset	Elevation
1100	1114	Ramp Running Slope	6.15	0.23	3.7%	0.5% to 8.3%						1100	Ridgeway Ave	NW	1077.24
1101	1102	Ramp Running Slope	3.95	0.25	6.3%	0.5% to 8.3%						1101	Ridgeway Ave	NW	1077.14
1102	1103	Ramp Running Slope	3.88	-0.31	-8.0%	0.5% to 8.3%	Yes			Slope required to match existing conditions		1102	Ridgeway Ave	NW	1077.39
1102	1106	Landing/Turning Space	5.00	0.07	1.5%	0.1% to 2.0%						1103	Ridgeway Ave	NW	1077.08
1102	1114	Landing/Turning Space	5.00	0.08	1.5%	0.1% to 2.0%						1104	Ridgeway Ave	NW	1077.02
1104	1105	Ramp Running Slope	5.71	0.43	7.5%	0.5% to 8.3%	Yes			Slope required to match existing conditions		1105	Ridgeway Ave	NW	1077.45
1106	1107	Sidewalk Running Slope	6.94	0.07	0.9%	0.5% to 5.0%						1106	Ridgeway Ave	NW	1077.47
1106	1113	Landing/Turning Space	5.00	0.08	1.6%	0.1% to 2.0%	Yes			Slope required to match existing conditions		1107	Ridgeway Ave	NW	1077.53
1107	1108	Sidewalk Cross Slope	5.00	0.07	1.4%	0.5% to 2.0%						1108	Ridgeway Ave	NW	1077.60
1108	1109	Sidewalk Cross Slope	2.23	0.03	1.3%	0.5% to 2.0%						1109	Ridgeway Ave	NW	1077.63
1108	1113	Sidewalk Running Slope	6.94	-0.05	-0.8%	0.5% to 5.0%						1110	Ridgeway Ave	NW	1077.46
1109	1110	Sidewalk Running Slope	10.80	-0.17	-1.6%	0.5% to 5.0%						1111	Ridgeway Ave	NW	1077.41
1109	1113	Sidewalk Cross Slope	6.57	-0.09	-1.3%	0.5% to 2.0%						1112	Ridgeway Ave	NW	1077.50
1110	1111	Match Existing Cross Slope	9.73	-0.05	-0.5%	Match Existing						1113	Ridgeway Ave	NW	1077.55
1111	1112	Sidewalk Running Slope	10.91	0.09	0.8%	0.5% to 5.0%						1114	Ridgeway Ave	NW	1077.47
1113	1114	Ramp Cross Slope	5.00	-0.08	-1.6%	0.1% to 2.0%	Yes			Slope required to match existing conditions					
1200	1203	Ramp Running Slope	12.41	0.89	7.2%	0.5% to 8.3%						1200	Ridgeway Ave	NE	1077.07
1201	1202	Sidewalk Running Slope	12.30	-0.16	-1.3%	0.5% to 5.0%						1201	Ridgeway Ave	NE	1077.58
1202	1204	Match Existing Cross Slope	4.66	0.26	5.6%	Match Existing						1202	Ridgeway Ave	NE	1077.42
1203	1204	Sidewalk Running Slope	12.30	-0.28	-2.3%	0.5% to 5.0%						1203	Ridgeway Ave	NE	1077.96
1203	1205	Landing/Turning Space	5.00	0.07	1.4%	0.1% to 2.0%						1204	Ridgeway Ave	NE	1077.68
1203	1208	Landing/Turning Space	5.00	-0.08	-1.5%	0.1% to 2.0%						1205	Ridgeway Ave	NE	1078.03
1204	1206	Match Existing Cross Slope	5.00	0.23	4.6%	Match Existing						1206	Ridgeway Ave	NE	1077.91
1205	1206	Sidewalk Running Slope	12.22	-0.12	-1.0%	0.5% to 5.0%						1207	Ridgeway Ave	NE	1077.96
1205	1207	Landing/Turning Space	5.00	-0.07	-1.4%	0.1% to 2.0%						1208	Ridgeway Ave	NE	1077.88
1207	1208	Landing/Turning Space	5.00	-0.08	-1.5%	0.1% to 2.0%						1209	Ridgeway Ave	NE	1077.19
1208	1209	Ramp Running Slope	9.71	-0.69	-7.1%	0.5% to 8.3%									
1300	1301	Ramp Running Slope	18.29	1.41	7.7%	0.5% to 8.3%	Yes			Slope required to match existing conditions		1300	Washington Ave	SE	1077.84
1301	1302	Landing/Turning Space	5.00	0.08	1.5%	0.1% to 2.0%						1301	Washington Ave	SE	1079.25
1301	1312	Landing/Turning Space	5.00	0.08	1.5%	0.1% to 2.0%						1302	Washington Ave	SE	1079.33
1302	1303	Landing/Turning Space	5.00	0.08	1.5%	0.1% to 2.0%						1303	Washington Ave	SE	1079.41
1303	1304	Sidewalk Cross Slope	2.83	0.02	0.8%	0.5% to 2.0%						1304	Washington Ave	SE	1079.43
1303	1312	Landing/Turning Space	5.00	-0.08	-1.5%	0.1% to 2.0%						1305	Washington Ave	SE	1079.39
1304	1305	Sidewalk Running Slope	5.00	-0.05	-0.9%	0.5% to 5.0%						1306	Washington Ave	SE	1079.04
1305	1306	Sidewalk Running Slope	4.47	-0.35	-7.7%	0.5% to 8.7%				Slope required to match existing conditions		1307	Washington Ave	SE	1078.90
1305	1312	Sidewalk Cross Slope	2.84	-0.06	-1.9%	0.5% to 2.0%	Yes			Slope required to match existing conditions		1308	Washington Ave	SE	1078.76
1306	1307	Ramp Running Slope	4.00	-0.14	-3.5%	0.5% to 8.3%						1309	Washington Ave	SE	1078.64
1306	1311	Sidewalk Cross Slope	4.96	-0.29	-5.8%	0.5% to 6.8%				Slope required to match existing conditions		1310	Washington Ave	SE	1078.70
1307	1308	Sidewalk Running Slope	4.00	-0.14	-3.5%	0.5% to 5.0%						1311	Washington Ave	SE	1078.75
1307	1310	Sidewalk Cross Slope	4.89	-0.20	-4.1%	0.5% to 5.1%				Slope required to match existing conditions		1312	Washington Ave	SE	1079.33
1308	1309	Match Existing Cross Slope	3.84	-0.12	-3.1%	Match Existing						1313	Washington Ave	SE	1077.68
1309	1310	Sidewalk Running Slope	4.11	0.06	1.5%	0.5% to 5.0%									
1310	1311	Sidewalk Running Slope	4.00	0.05	1.2%	0.5% to 5.0%									
1312	1313	Ramp Running Slope	21.64	-1.65	-7.6%	0.5% to 8.3%	Yes			Slope required to match existing conditions					
1400	1402	Ramp Cross Slope	5.00	0.05	1.0%	0.1% to 2.0%						1400	Washington Ave	SW	1077.83
1400	1405	Ramp Running Slope	2.89	0.08	2.8%	0.5% to 8.3%						1401	Washington Ave	SW	1077.93
1401	1402	Ramp Running Slope	2.97	-0.05	-1.7%	0.5% to 8.3%						1402	Washington Ave	SW	1077.88
1402	1403	Ramp Running Slope	2.89	0.08	2.9%	0.5% to 8.3%						1403	Washington Ave	SW	1077.96
1403	1404	Landing/Turning Space	5.00	0.08	1.5%	0.1% to 2.0%						1404	Washington Ave	SW	1078.04
1403	1415	Landing/Turning Space	5.00	-0.07	-1.5%	0.1% to 2.0%						1405	Washington Ave	SW	1077.91
1404	1406	Sidewalk Running Slope	5.80	0.04	0.7%	0.5% to 5.0%						1406	Washington Ave	SW	1078.08
1404	1410	Sidewalk Running Slope	8.52	0.13	1.5%	0.5% to 5.0%						1407	Washington Ave	SW	1078.31
1404	1412	Landing/Turning Space	5.00	-0.08	-1.5%	0.1% to 2.0%						1408	Washington Ave	SW	1078.36
1405	1406	Match Existing Cross Slope	3.28	0.17	5.2%	Match Existing						1409	Washington Ave	SW	1078.24
1406	1407	Match Existing Cross Slope	5.04	0.23	4.6%	Match Existing						1410	Washington Ave	SW	1078.17
1407	1408	Match Existing Cross Slope	3.51	0.05	1.4%	Match Existing						1411	Washington Ave	SW	1078.09
1408	1409	Sidewalk Running Slope	3.97	-0.12	-3.0%	0.5% to 5.0%						1412	Washington Ave	SW	1077.96
1409	1410	Sidewalk Running Slope	1.77	-0.07	-4.0%	0.5% to 5.0%						1413	Washington Ave	SW	1077.59
1410	1411	Sidewalk Cross Slope	5.00	-0.08	-1.5%	0.5% to 2.0%						1414	Washington Ave	SW	1077.71
1411	1412	Sidewalk Running Slope	8.49	-0.13	-1.5%	0.5% to 5.0%						1415	Washington Ave	SW	1077.89
1412	1413	Ramp Running Slope	4.47	-0.37	-8.3%	0.5% to 8.3%	Yes			Proposed slope is maximum allowed					
1412	1415	Landing/Turning Space	5.00	-0.07	-1.5%	0.1% to 2.0%									
1414	1415	Ramp Running Slope	2.45	0.18	7.3%	0.5% to 8.3%									