BRIDGE REPAIR
MB-034-5(500)163-77-68

LETTING DATE
12-17-2013

MONROE COUNTY

CONVENTIONAL SIGNS

- DIVIDED HIGHWAY
- PAVED ROAD
- BITUMINOUS ROAD
- GRAVEL ROAD
- EARTH ROAD
- INTERSTATE HIGHWAY
- UNITED STATES HIGHWAY
- STATE HIGHWAY
- COUNTY HIGHWAY
- RAILROAD
- PIPELINE
- AIRPORT
- HYDROLOGY
- BRIDGE
- STATE BOUNDARY
- COUNTY BOUNDARY
- CORPORATE LIMIT LINE
- TOWNSHIP LINE
- SECTION LINE

Iowa Department of Transportation
Highway Division

PLANS OF PROPOSED IMPROVEMENTS ON THE

PRIMARY ROAD SYSTEM

MONROE COUNTY

BRIDGE REPAIR

US 34 OVER B.N.S.F. R.R.
4.5 MI. WEST OF IA 5

THE IOWA DEPARTMENT OF TRANSPORTATION STANDARD SPECIFICATIONS FOR HIGHWAY AND BRIDGE CONSTRUCTION, SERIES 2012, PLUS APPLICABLE GENERAL SUPPLEMENTAL SPECIFICATIONS, DEVELOPMENTAL SPECIFICATIONS, SUPPLEMENTAL SPECIFICATIONS AND SPECIAL PROVISIONS SHALL APPLY TO CONSTRUCTION WORK ON THIS PROJECT.

TOTAL SHEETS
32
PROJECT NUMBER
MB-034-5(500)163-77-68
R.O.W. PROJECT NUMBER
PROJECT IDENTIFICATION NUMBER
12-68-034-020

INDEX OF SHEETS

REVISIONS

DESIGN NO. 113 — DESIGN NO. 213

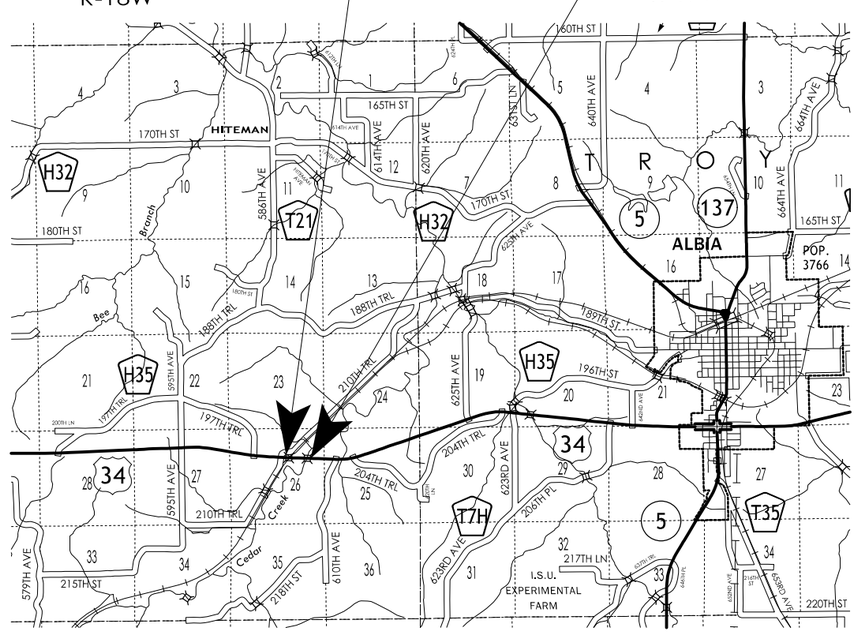

LOCATION MAP

IOWA ONE CALL
1-800-292-8989
www.iowaonecall.com
811 Know what's below. Call before you dig.

STANDARD ROAD PLANS

STANDARD ROAD PLANS ARE LISTED ON SHEET NUMBER C.1

DESIGN DATA RURAL

2012	AADT	2450	V.P.D.
202	AADT		V.P.D.
202	DHV		V.P.H.
TRUCKS		26	%
Total Design ESALs			

INDEX OF SEALS

SHEET NO.	NAME	TYPE
1	DAVID L. BARE	STRUCTURAL DESIGN
A.1	PAUL W. FLATTERY	ROADWAY DESIGN

STRUCTURAL DESIGN

LICENSED PROFESSIONAL ENGINEER David L. Bare 15597 IOWA

I hereby certify that this engineering document was prepared by me or under my direct personal supervision and that I am a duly licensed Professional Engineer under the laws of the State of Iowa.

Signature — Date 9-27-2013

David L. Bare
Printed or Typed Name

My license renewal date is December 31, 2014

Pages or sheets covered by this seal: SHEETS 1 THRU 22 OF 32

PROJECT DIRECTORY NAME: 6803402012

DESIGN TEAM	DLB / JDC / RDM	ENGLISH	IOWA DOT * OFFICE OF BRIDGES AND STRUCTURES	FILE NO. 30708	MONROE COUNTY	PROJECT NUMBER MB-034-5(500)163-77-68	SHEET NUMBER 1

ESTIMATED BRIDGE REPAIR QUANTITIES

ITEM NO.	ITEM CODE	ITEM	UNIT	TOTAL	AS BUILT QUAN.
1	2401-6750001	REMOVALS, AS PER PLAN	LS	1.00	
2	2403-0100000	STRUCTURAL CONCRETE (MISCELLANEOUS)	CY	6.3	
3	2404-7775005	REINFORCING STEEL, EPOXY COATED	LB	633	
4	2413-1100000	PREFORMED ELASTIC NEOPRENE JOINT	LF	44	
5	2413-1200000	STEEL EXTRUSION JOINT WITH NEOPRENE	LF	39.2	
6	2413-1200100	NEOPRENE GLAND INSTALLATION AND TESTING	LF	39.2	
7	2508-0970000	CONTAINMENT	LS	1.00	
8	2508-0991000	PAINTING OF STRUCTURAL STEEL	LS	1.00	
9	2533-4980005	MOBILIZATION	LS	1.00	

ESTIMATE REFERENCE INFORMATION

ITEM NO.	ITEM CODE	DESCRIPTION
1	2401-6750001	**REMOVALS, AS PER PLAN** INCLUDES ALL WORK FOR REMOVAL AND OFF-SITE DISPOSAL OF CONCRETE FROM SLAB, CURB, AND RAIL ALONG WITH THE EXISTING EXPANSION DEVICE. REMOVAL OF SCHEDULED ITEMS SHALL BE IN ACCORDANCE WITH SECTION 2401, OF THE STANDARD SPECIFICATIONS. ANY DAMAGE TO MATERIAL NOT TO BE REMOVED SHALL BE THE RESPONSIBILITY OF THE CONTRACTOR AND REPAIRED AT NO EXTRA COST TO THE STATE.
2	2403-0100000	**STRUCTURAL CONCRETE (MISCELLANEOUS)** INCLUDES CLEANING EXISTING CONCRETE RAIL AND ABUTMENT SEATS, FURNISHING AND PLACING CONCRETE SEALER. INCLUDES ANY EXCAVATION NECESSARY TO PERFORM REPAIRS.
3	2404-7775005	**REINFORCING STEEL, EPOXY COATED** INCLUDES MECHANICAL SPLICE ASSEMBLIES.
4	2413-1100000	**PREFORMED ELASTIC NEOPRENE JOINT** - -
5	2413-1200000	**STEEL EXTRUSION JOINT WITH NEOPRENE** INCLUDES ALL NECESSARY HARDWARE AND ACCESSORIES INCLUDING THE ANCHORAGE SYSTEM, TEMPORARY ERECTION MATERIAL AND THE $\frac{3}{8}$" BARRIER PLATES WITH THEIR ANCHORAGE SYSTEM. EXCLUDES INSTALLATION OF NEOPRENE GLAND.
6	2413-1200100	**NEOPRENE GLAND INSTALLATION AND TESTING** INCLUDES INSTALLATION OF NEOPRENE GLAND AND WATER TESTING OF JOINT.
7	2508-0970000	**CONTAINMENT** - -
8	2508-0991000	**PAINTING OF STRUCTURAL STEEL** - -
9	2533-4980005	**MOBILIZATION** - -

NOTE:
ROADWAY QUANTITIES SHOWN ELSEWHERE IN THESE PLANS.

DESIGN FOR REPAIRS TO A 37° 19' L.A. SKEW

190'-0 x 30'-0 CONTINUOUS
I-BEAM BRIDGE

58'-0 END SPANS 74'-0 INTERIOR SPAN

QUANTITIES

STA. 583+37.00 (US 34) OCTOBER, 2013

MONROE COUNTY

IOWA DEPARTMENT OF TRANSPORTATION - HIGHWAY DIVISION

DESIGN SHEET NO. 1 OF 13 FILE NO. 30708 DESIGN NO. 113

GENERAL NOTES:

THIS DESIGN IS FOR REPAIRS TO THE EXISTING 190'-0 x 30'-0 CONTINUOUS I-BEAM BRIDGE, WITH A 37° 19' L.A. SKEW, ON U.S. 34 OVER B.N.S.F. R.R. COPIES OF ORIGINAL DESIGN PLANS WILL BE MADE AVAILABLE TO THE CONTRACTOR. CONTACT THE OFFICE OF CONTRACTS - HIGHWAY DIVISION - IOWA D.O.T. - AMES. DIMENSIONS SHOWN ON THESE PLANS ARE BASED ON DESIGN PLANS.

REPAIR SHALL CONSIST OF THE FOLLOWING:

1. REMOVING AND REPLACING EXISTING EXPANSION JOINT ON EAST ABUTMENT WITH STRIP SEAL EXTRUSION JOINT.
2. REBUILDING TOP OF BACKWALL AND INSTALLING COMPRESSION SEAL ON WEST ABUTMENT.
3. REMOVING AND RECONSTRUCTING PORTIONS OF THE CURB AND RETROFIT RAIL.
4. APPLYING CONCRETE SEALER TO THE EXISTING BARRIER RAILS.
5. CLEAN AND SEAL ABUTMENT SEATS.
6. CLEAN AND PAINT ABUTMENT BEARING PLATE AND BEARING DEVICES.

CONSTRUCTION SHALL BE DONE IN STAGES WITH AT LEAST ONE LANE OF TRAFFIC MAINTAINED AT ALL TIMES IN ACCORDANCE WITH "TRAFFIC CONTROL PLAN" NOTE.

CONSTRUCTION STAGES I & II AS DETAILED ON THESE PLANS MAY BE REVERSED AT THE CONTRACTOR'S OPTION SUBJECT TO THE ENGINEER'S APPROVAL.

ALL DIMENSIONS AND DETAILS SHOWN IN THESE PLANS PERTINENT TO NEW CONSTRUCTION IN RELATION TO EXISTING PORTIONS OF THE STRUCTURE SHALL BE VERIFIED IN THE FIELD BY THE BRIDGE CONTRACTOR BEFORE STARTING CONSTRUCTION.

FAINT LINES ON PLANS INDICATE EXISTING PORTIONS OF THE BRIDGE.

UTILITY COMPANIES AND MUNICIPALITIES WHOSE FACILITIES ARE SHOWN ON THE PLANS OR KNOWN TO BE WITHIN THE CONSTRUCTION LIMITS SHALL BE NOTIFIED BY THE CONTRACTOR OF THE CONSTRUCTION STARTING DATE.

MINIMUM CLEAR DISTANCE FROM FACE OF CONCRETE TO NEAR REINFORCING BAR IS TO BE 2" UNLESS OTHERWISE NOTED OR SHOWN.

ALL EXPOSED CORNERS 90° OR SHARPER ARE TO BE FILLETED WITH A $\frac{3}{4}$" DRESSED AND BEVELED STRIP.

ALL REINFORCING STEEL IS TO BE GRADE 60 AND EPOXY COATED.

ALL CONCRETE REMOVAL LINES SHALL BE INITIATED WITH A $\frac{3}{4}$" SAWCUT.

THE LUMP SUM BID FOR "REMOVALS, AS PER PLAN" SHALL INCLUDE ALL COSTS ASSOCIATED WITH REMOVING THE FOLLOWING: 1) TOP OF EXISTING BACKWALLS 2) PORTIONS OF SLAB, CURB, AND RETROFIT RAIL, AND 3) EXISTING EXPANSION JOINTS. REMOVAL OF SCHEDULED ITEMS SHALL BE IN ACCORDANCE WITH SECTION 2401 OF THE SPECIFICATIONS. ANY DAMAGE TO ANY STEEL OR CONCRETE NOT TO BE REMOVED SHALL BE THE RESPONSIBILITY OF THE CONTRACTOR AND REPAIRED AT NO EXTRA COST TO THE STATE.

EXISTING REINFORCING BARS THAT ARE EXPOSED BY CONCRETE REMOVAL SHALL BE CLEANED AND CAREFULLY INCORPORATED INTO THE NEW WORK WHERE NOTED OR SHOWN. REINFORCING BARS WHICH ARE DAMAGED OR RENDERED UNSERVICEABLE BY REMOVAL OPERATIONS SHALL BE REPLACED AS DIRECTED BY THE ENGINEER AT NO ADDITIONAL COST TO THE STATE.

KEYWAY DIMENSIONS SHOWN ON THE PLANS ARE BASED ON NOMINAL DIMENSIONS UNLESS STATED OTHERWISE. IN ADDITION, THE BEVEL USED ON THE KEYWAY SHALL BE LIMITED TO A MAXIMUM OF 10 DEGREES FROM VERTICAL.

THESE BRIDGE PLANS LABEL ALL REINFORCING STEEL WITH ENGLISH NOTATION (5a1 IS $\frac{5}{8}$ INCH DIAMETER BAR). ENGLISH REINFORCING STEEL RECEIVED IN THE FIELD MAY DISPLAY THE FOLLOWING "BAR DESIGNATION". THE "BAR DESIGNATION" IS THE STAMPED IMPRESSION ON THE REINFORCING BARS, AND IS EQUIVALENT TO THE BAR DIAMETER IN MILLIMETERS.

ENGLISH SIZE	3	4	5	6	7	8	9	10	11
BAR DESIGNATION	10	13	16	19	22	25	29	32	36

SEAL EXISTING CONCRETE RAILING AND DECK IN ACCORDANCE WITH ARTICLE 2413.03,G, OF THE STANDARD SPECIFICATIONS. IF NEW SECTIONS OF RAIL ARE CONSTRUCTED, THE NEW SECTIONS SHALL NOT BE SEALED. ALL COSTS ASSOCIATED WITH CLEANING AND SEALING OF THE CONCRETE RAILS SHALL BE INCLUDED IN THE UNIT PRICE BID ITEM "STRUCTURAL CONCRETE".

THE BRIDGE CONTRACTOR SHALL DRESS UP THE SLOPES AROUND THE WINGS WHICH ARE DISTURBED DURING CONSTRUCTION. THIS WORK SHALL BE CONSIDERED INCIDENTAL AND NO EXTRA PAYMENT WILL BE MADE.

THE TOP OF THE ABUTMENT BACKWALLS AS SHOWN SHALL BE CONSTRUCTED USING STRUCTURAL CONCRETE CLASS C. PROMPTLY AFTER THE CONCRETE HAS BEEN PLACED AND VIBRATED AS PROVIDED IN ARTICLES 2403.03, C, AND 2403.03, D, OF THE STANDARD SPECIFICATIONS, IT SHALL BE HAND FINISHED TO PROVIDE A SMOOTH SURFACE WITH THE PROPER CROWN. THE CONTRACTOR MAY ELECT TO USE FORMWORK WHICH IS MARKED OR TRIMMED TO THE CORRECT ELEVATION AND CROWN TO PROVIDE THE LIMITS FOR THE HAND FINISHING.

ANY EXCAVATION REQUIRED IS TO BE CONSIDERED INCIDENTAL AND NO EXTRA PAYMENT WILL BE MADE.

THE 5a1 AND 5a2 BARS IN THE ABUTMENT BACKWALLS SHALL BE SPLICED AT THE LOCATIONS SHOWN USING MECHANICAL SPLICE ASSEMBLIES. MECHANICAL SPLICE ASSEMBLIES CONSIST OF MECHANICAL SPLICERS AND REINFORCING SPLICE BARS AS REQUIRED TO FACILITATE THE USE OF THE MECHANICAL SPLICER. THE MECHANICAL SPLICE ASSEMBLY USED SHALL MEET THE REQUIREMENTS OF MATERIALS IM 451 APPENDIX E. REINFORCING SPLICE BARS SHALL BE A MINIMUM OF $\frac{5}{8}$ INCH DIAMETERS.

ALL MECHANICAL SPLICE ASSEMBLIES TO BE USED SHALL BE EPOXY COATED.

THE COST OF ALL SPLICE ASSEMBLIES IS TO BE INCLUDED IN THE PRICE BID FOR "REINFORCING STEEL EPOXY COATED" AND NO SEPARATE PAYMENT WILL BE MADE. THE WEIGHT OF MECHANICAL SPLICE ASSEMBLIES IS NOT INCLUDED IN THE QUANTITY SHOWN FOR "REINFORCING STEEL EPOXY COATED". A TOTAL OF 4 EPOXY COATED SPLICE ASSEMBLIES WILL BE REQUIRED.

ABUTMENT BEARINGS (SOLE PLATES AND MASONRY PLATES) ARE TO BE CLEANED AND PAINTED. CLEANING BY VACUUM BLASTING OR BY A NON-BLASTING METHOD IS REQUIRED. SURFACE TO BE PAINTED SHALL BE PREPARED IN ACCORDANCE WITH STEEL STRUCTURES PAINTING COUNCIL (SSPC) SP3. SURFACES OF THE ABUTMENT BEARINGS ARE TO BE GIVEN ONE COAT OF BOTH A RUST INHIBITOR TYPE PRIMER AND FINAL COAT AS APPROVED BY THE ENGINEER. THE COLOR OF THE DRY PAINT SHOULD APPROXIMATE THE COLOR OF CONCRETE. THIS WORK SHALL BE MEASURED AND PAID FOR AT THE CONTRACT UNIT PRICE PER LUMP SUM FOR THE BID ITEM, "PAINTING OF STRUCTURAL STEEL".

CONTAINMENT AND DISPOSAL OF WASTE SHALL BE IN ACCORDANCE WITH SECTION 2508 OF THE STANDARD SPECIFICATIONS. ALL COSTS ASSOCIATED WITH HAULING AND DEPOSITING OF WASTE AT THE DESIGNATED SITE/FACILITY SHALL BE THE RESPONSIBILITY OF THE CONTRACTOR AND INCLUDED IN THE CONTRACT PRICE BID FOR THE "CONTAINMENT" ITEM.

A SCRAPE SAMPLE WAS TAKEN FROM AN AREA OF THIS BRIDGE TO GET AN INDICATION OF THE EXISTENCE OF AND LEVEL OF TOTAL CHROMIUM AND TOTAL LEAD. ANALYSIS OF TOTAL LEAD ON THIS SAMPLE WAS 545 PARTS PER MILLION (PPM). ANALYSIS OF TOTAL CHROMIUM ON THIS SAMPLE WAS 184 PPM. THESE ANALYSES SHOW THE EXISTENCE OF THESE TWO TOXIC CONSTITUENTS. LEVELS INDICATED BY THESE TESTS COULD CREATE CONDITIONS ABOVE REGULATORY LIMITS FOR HEALTH AND SAFETY REQUIREMENTS. NO OTHER CONSTITUENTS WERE ANALYZED. THE BIDDER SHOULD NOT RELY ON THE DEPARTMENT'S TESTING AND ANALYSIS FOR ANY PURPOSE OTHER THAN AS AN INDICATION OF THE EXISTENCE OF THESE TWO TOXIC CONSTITUENTS.

SPECIFICATIONS:

DESIGN: AASHTO SERIES OF 2002.
CONSTRUCTION: IOWA DEPARTMENT OF TRANSPORTATION STANDARD SPECIFICATIONS FOR HIGHWAY AND BRIDGE CONSTRUCTION, SERIES 2012, PLUS APPLICABLE GENERAL SUPPLEMENTAL SPECIFICATIONS, DEVELOPMENTAL SPECIFICATIONS, SUPPLEMENTAL SPECIFICATIONS AND SPECIAL PROVISIONS SHALL APPLY TO CONSTRUCTION WORK ON THIS PROJECT.

DESIGN STRESSES:

DESIGN STRESSES FOR THE FOLLOWING MATERIALS ARE IN ACCORDANCE WITH THE AASHTO STANDARD SPECIFICATIONS FOR HIGHWAY BRIDGES, SERIES OF 2002.
REINFORCING STEEL IN ACCORDANCE WITH SECTION 8, GRADE 60.
CONCRETE IN ACCORDANCE WITH SECTION 8, f'c = 3,500 PSI.

STRUCTURAL STEEL IN ACCORDANCE WITH SECTION 10 ASTM A709 GRADE 36 AND GRADE 50 (AASHTO M270 GRADE 36 AND GRADE 50).

DOWEL SETTING NOTE:

THE 5b2 AND 6e1 BARS MAY BE SET AS DOWELS IN DRILLED HOLES. HOLES ARE TO BE 10" DEEP. THE DOWELS SHALL BE INSTALLED IN ACCORDANCE WITH THE MANUFACTURER'S RECOMMENDATIONS. EITHER OF THE FOLLOWING SYSTEMS MAY BE USED AS A BONDING AGENT FOR VERTICAL DOWELS, BUT ONLY SYSTEM "A" MAY BE USED FOR HORIZONTAL DOWELS:

A. POLYMER GROUT SYSTEM IN ACCORDANCE WITH ARTICLE 2301.03, E, OF THE STANDARD SPECIFICATIONS.
B. HYDRAULIC CEMENT GROUT SYSTEMS. DRILLED HOLES ARE TO BE $2\frac{1}{2}$ TIMES THE DOWEL DIAMETER AND ARE TO BE BLOWN CLEAN WITH COMPRESSED AIR IMMEDIATELY PRIOR TO PLACING GROUT. THE HYDRAULIC CEMENT GROUT SHALL BE ONE OF THOSE APPROVED IN MATERIALS I.M. 491.13 AND SHALL BE USED IN ACCORDANCE WITH THE MANUFACTURER'S RECOMMENDATIONS.

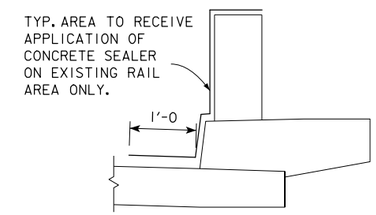

DETAIL OF CONCRETE SEALER AREA

CONCRETE PLACEMENT SUMMARY - BRIDGE

SECTION	WEST ABUTMENT	EAST ABUTMENT	TOTAL
ABUTMENT BACKWALL & CURB	1.9	1.9	3.8
ABUTMENT SLAB & CURB	0.0	2.0	2.0
BARRIER RAIL	0.2	0.3	0.5
TOTAL (CU. YDS.)	2.1	4.2	6.3

TRAFFIC CONTROL PLAN

NOTE: THE ROADWAY WILL BE OPEN TO THRU TRAFFIC. REFER TO THE TRAFFIC CONTROL PLAN SHOWN ELSEWHERE IN THESE PLANS.

LOCATION:

U.S. 34 OVER B.N.S.F. R.R.
T-72N R-18W
SECTION 26
GUILFORD TOWNSHIP
MONROE COUNTY
FHWA NO. 037380
MAINT. NO. 6863.2S034
LATITUDE: 41.0110533
LONGITUDE: -92.8914578

DESIGN HISTORY AT THIS SITE

DES. NO.	TYPE OF WORK
462	ORIGINAL DESIGN
185	OVERLAY & RETROFIT RAIL
102	END SECTIONS

DESIGN FOR REPAIRS TO A 37° 19' L.A. SKEW

190'-0 x 30'-0 CONTINUOUS I-BEAM BRIDGE

58'-0 END SPANS 74'-0 INTERIOR SPAN

GENERAL NOTES

STA. 583+37.00 (US 34) OCTOBER, 2013

MONROE COUNTY

IOWA DEPARTMENT OF TRANSPORTATION - HIGHWAY DIVISION

DESIGN SHEET NO. 2 OF 13 FILE NO. 30708 DESIGN NO. 113

PRELIM. / FINAL	DRAWN	CHK'D	REV'D	APP'D	DATE
	PMK	FEJ			11-18-12

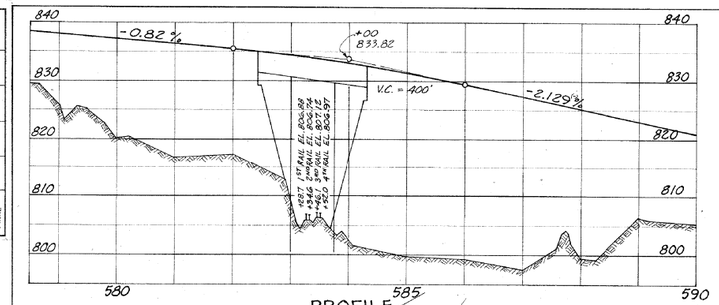

PROFILE

SCALES: L-100' HOR. 1" = 10' VERT.

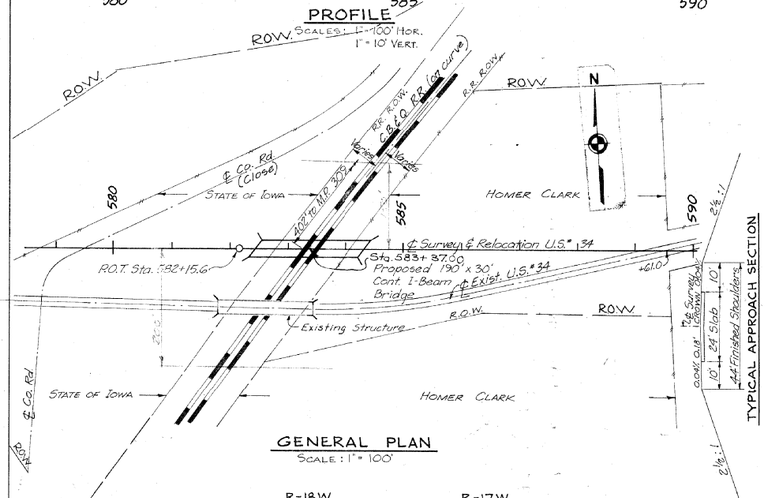

GENERAL PLAN

SCALE: 1" = 100'

TYPICAL APPROACH SECTION

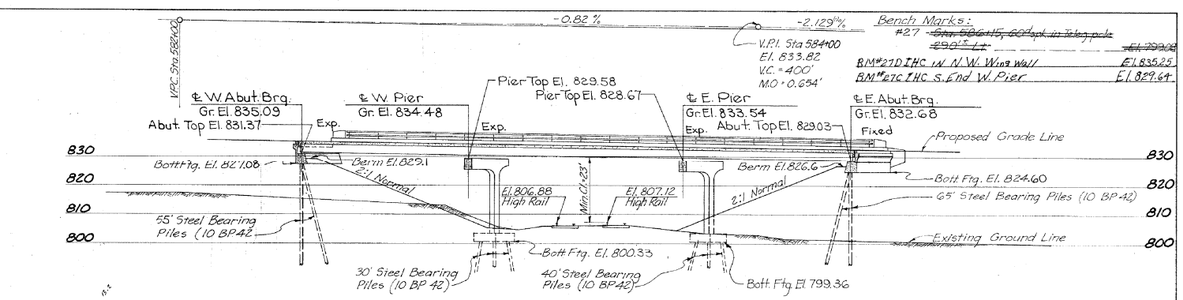

LONGITUDINAL SECTION

SCALE: 1" = 20'

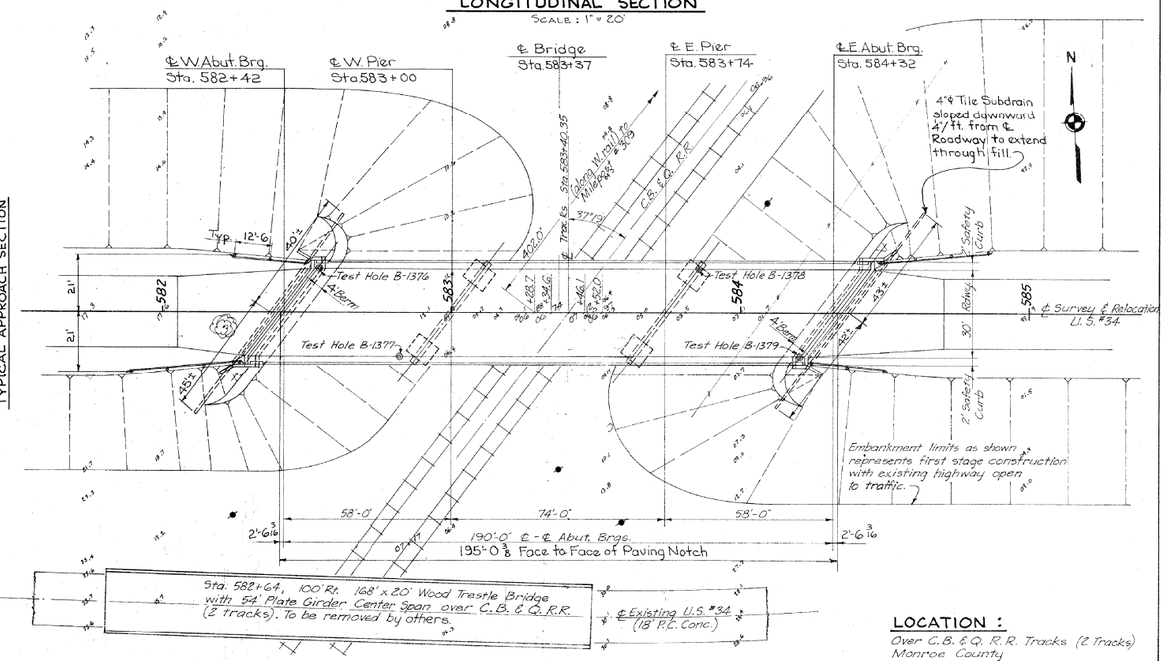

SITUATION PLAN

SCALE: 1" = 20'

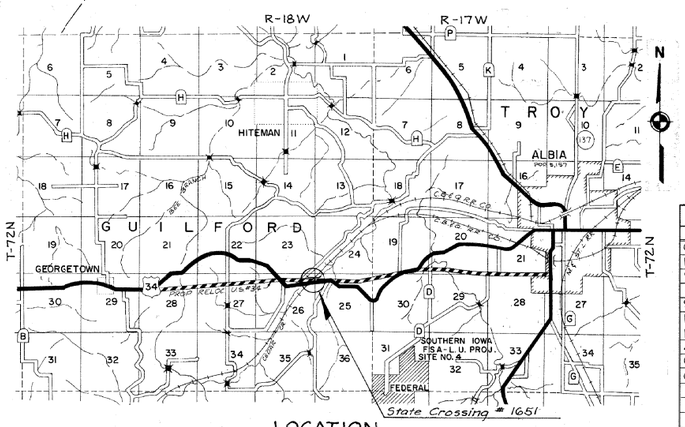

LOCATION

SCALE: 1" = 1 MILE

TOTAL ESTIMATED QUANTITES					
Item	Unit	Super.	2 Abut.	2 Piers	Total
Concrete	c.y.	192.4	19.9	92.7	365.0
Reinforcing Steel	lb.	59,847	8848	15210	83,905
Structural Steel	lb.	148,975	—	—	148,975
Aluminum Handrail (℄-℄ End Posts)	L.F.	—	—	—	368.0
OR					OR
Steel Handrail (℄-℄ End Posts)	L.F.	—	—	—	366.7
10 BP 42 Steel | Furnish	L.F.	—	8@55 8@65	14@30 14@40	1940
Bearing Piling | Drive	L.F.	—	8@55 8@65	14@30 14@40	1940
4" ϕ Tile Subdrain	L.F.	—	—	—	170
Granular Backfill	Tons	—	—	—	170
Class 20 Excavation	c.y.	—	200	127	327

Note: For Sounding Data see Sheet 2 of 11.

LOCATION:
Over C.B. & Q. R.R. Tracks (2 Tracks)
Monroe County
Guilford Twp.
Section 26
T-72N, R-18W
On Relocation U.S. #34

Design For 37°19' Skew
190' x 30' CONTINUOUS I-BEAM BRIDGE
58'-0 End Spans 74'-0 Interior Span
Concrete Floor & Substructure Tubular Rail
GENERAL & SITUATION PLANS
Station 583+37.00 Project No. F-FG-1027(12)
MONROE COUNTY
IOWA STATE HIGHWAY COMMISSION
April 1963 Iowa Crossing No. 1651 Sheet 1 of 11

THIS SHEET FROM ORIGINAL DESIGN PLANS IS INCLUDED FOR INFORMATION ONLY.

DESIGN FOR REPAIRS TO A 37° 19' L.A. SKEW

190'-0 x 30'-0 CONTINUOUS I-BEAM BRIDGE

58'-0 END SPANS 74'-0 INTERIOR SPAN

SITUATION PLAN

STA. 583+37.00 (US 34) OCTOBER, 2013

MONROE COUNTY

IOWA DEPARTMENT OF TRANSPORTATION - HIGHWAY DIVISION

DESIGN SHEET NO. 3 OF 13 FILE NO. 30708 DESIGN NO. 113

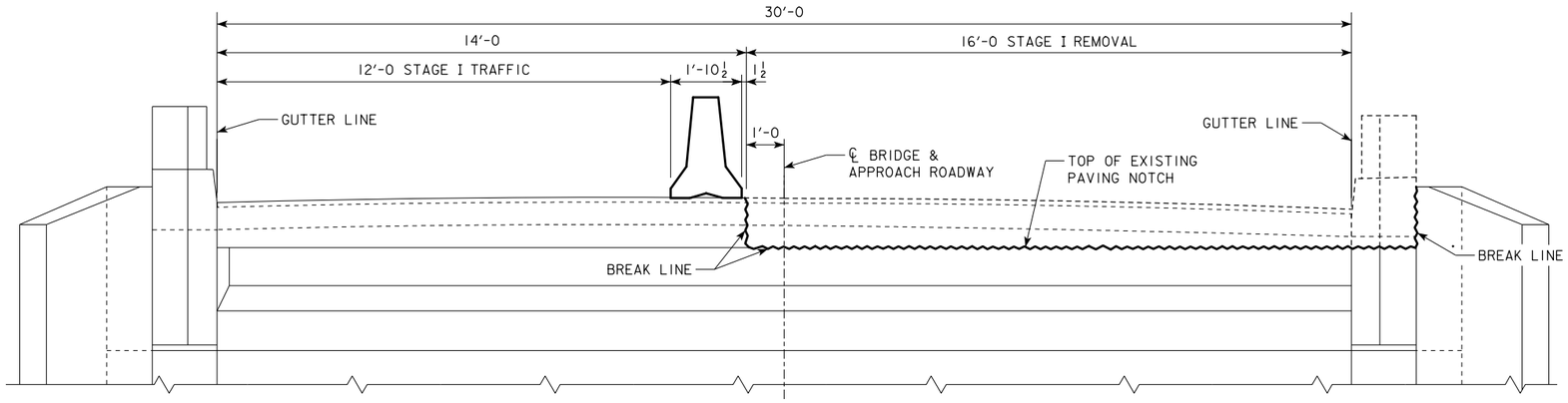

STAGE I REMOVAL

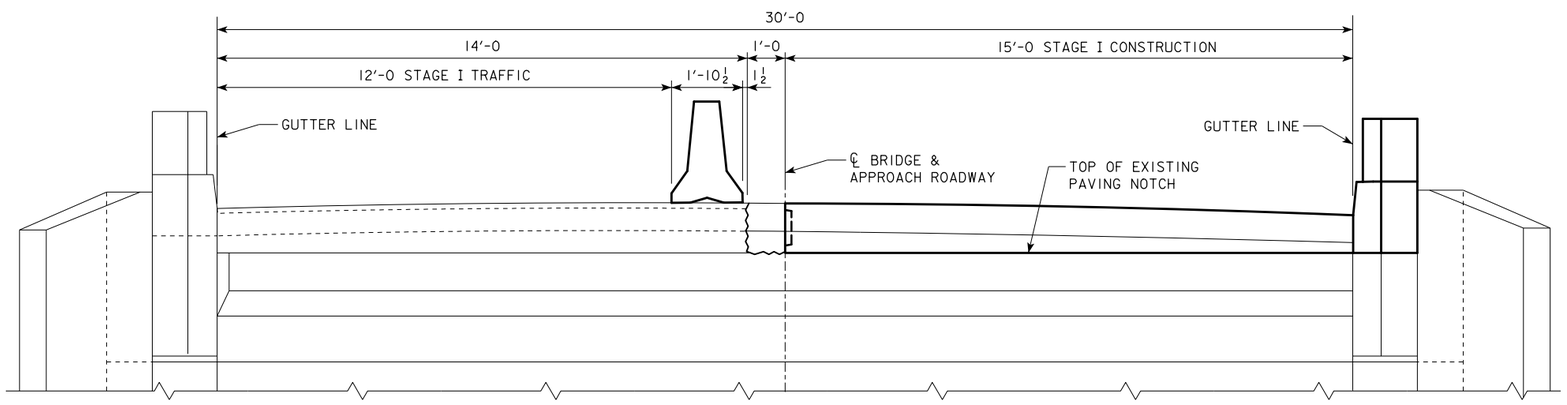

STAGE I CONSTRUCTION

DESIGN FOR REPAIRS TO A 37° 19' L.A. SKEW

190'-0 x 30'-0 CONTINUOUS
I-BEAM BRIDGE

58'-0 END SPANS 74'-0 INTERIOR SPAN

STAGE I DETAILS

STA. 583+37.00 (US 34) OCTOBER, 2013

MONROE COUNTY

IOWA DEPARTMENT OF TRANSPORTATION - HIGHWAY DIVISION

DESIGN SHEET NO. 4 OF 13 FILE NO. 30708 DESIGN NO. 113

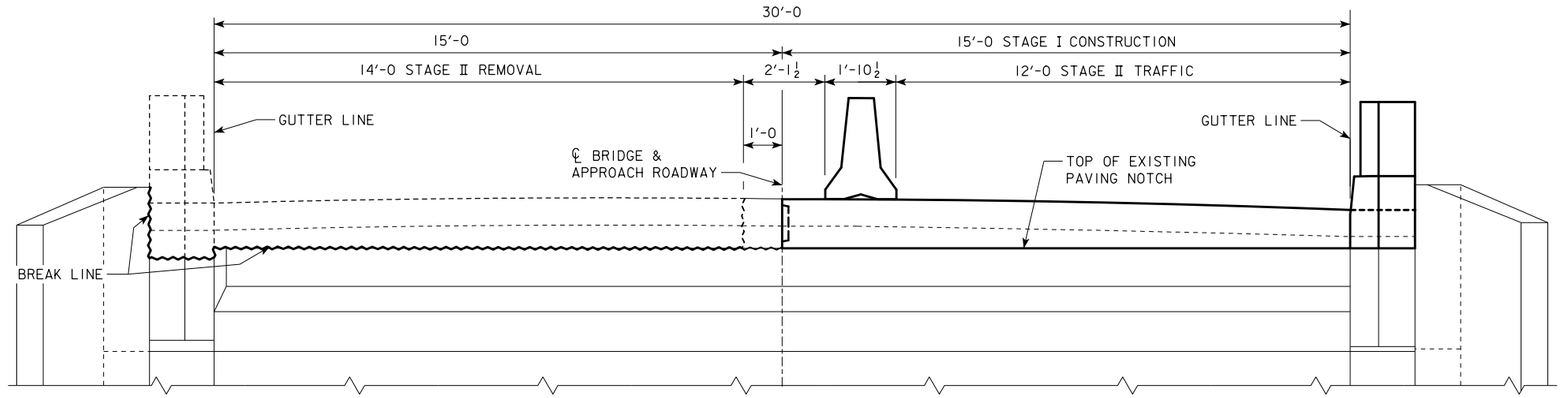

STAGE II REMOVAL

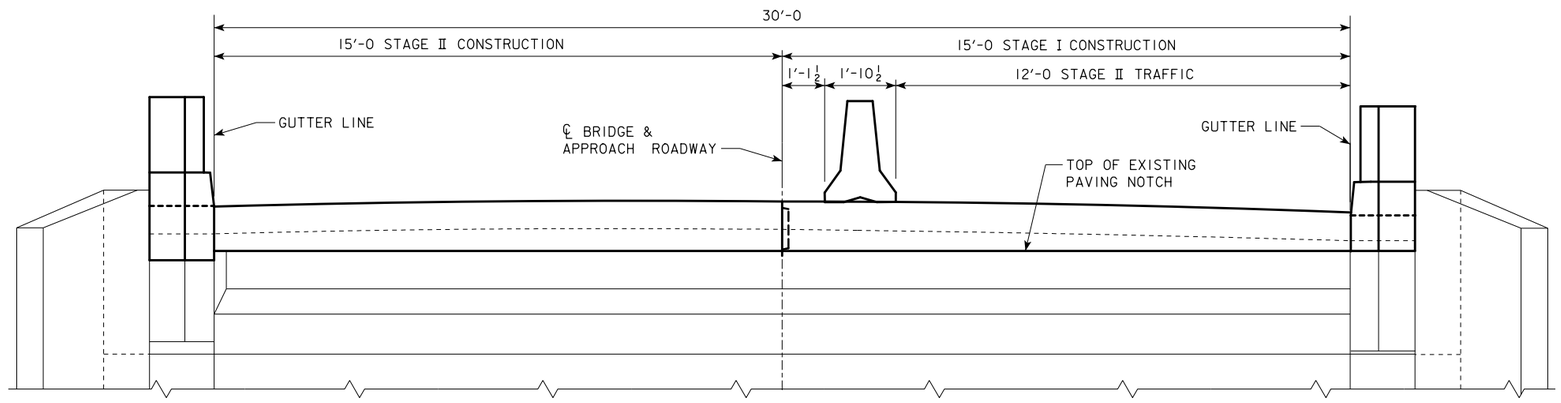

STAGE II CONSTRUCTION

DESIGN FOR REPAIRS TO A 37° 19' L.A. SKEW

190'-0 x 30'-0 CONTINUOUS I-BEAM BRIDGE

58'-0 END SPANS 74'-0 INTERIOR SPAN

STAGE II DETAILS

STA. 583+37.00 (US 34) OCTOBER, 2013

MONROE COUNTY

IOWA DEPARTMENT OF TRANSPORTATION - HIGHWAY DIVISION

DESIGN SHEET NO. 5 OF 13 FILE NO. 30708 DESIGN NO. 113

EPOXY REINFORCING BAR LIST - ONE ABUTMENT

BAR	LOCATION	SHAPE	NO.	LENGTH	WEIGHT
5a1	BACKWALL, TRANSV., STAGE 1	—	2	19'-5	41
5a2	BACKWALL, TRANSV., STAGE 2	—	2	17'-11	37
5a3	BACKWALL TO CURB DOWELS	⌐	3	5'-7	17
5a4	BACKWALL TO CURB DOWELS	⌐	1	5'-4	6
5b1	BACKWALL HAIRPIN	⊏	38	1'-10	73
5b2	BACKWALL, VERTICAL, DOWEL	L	38	1'-9	69
	EPOXY REINFORCING - TOTAL (LBS.)				243

BENT BAR DETAILS

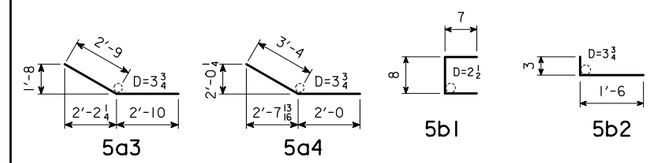

NOTE: ALL DIMENSIONS ARE OUT TO OUT. D = PIN DIAMETER.

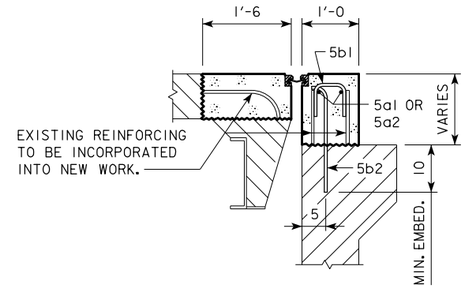

PART SECTION A-A

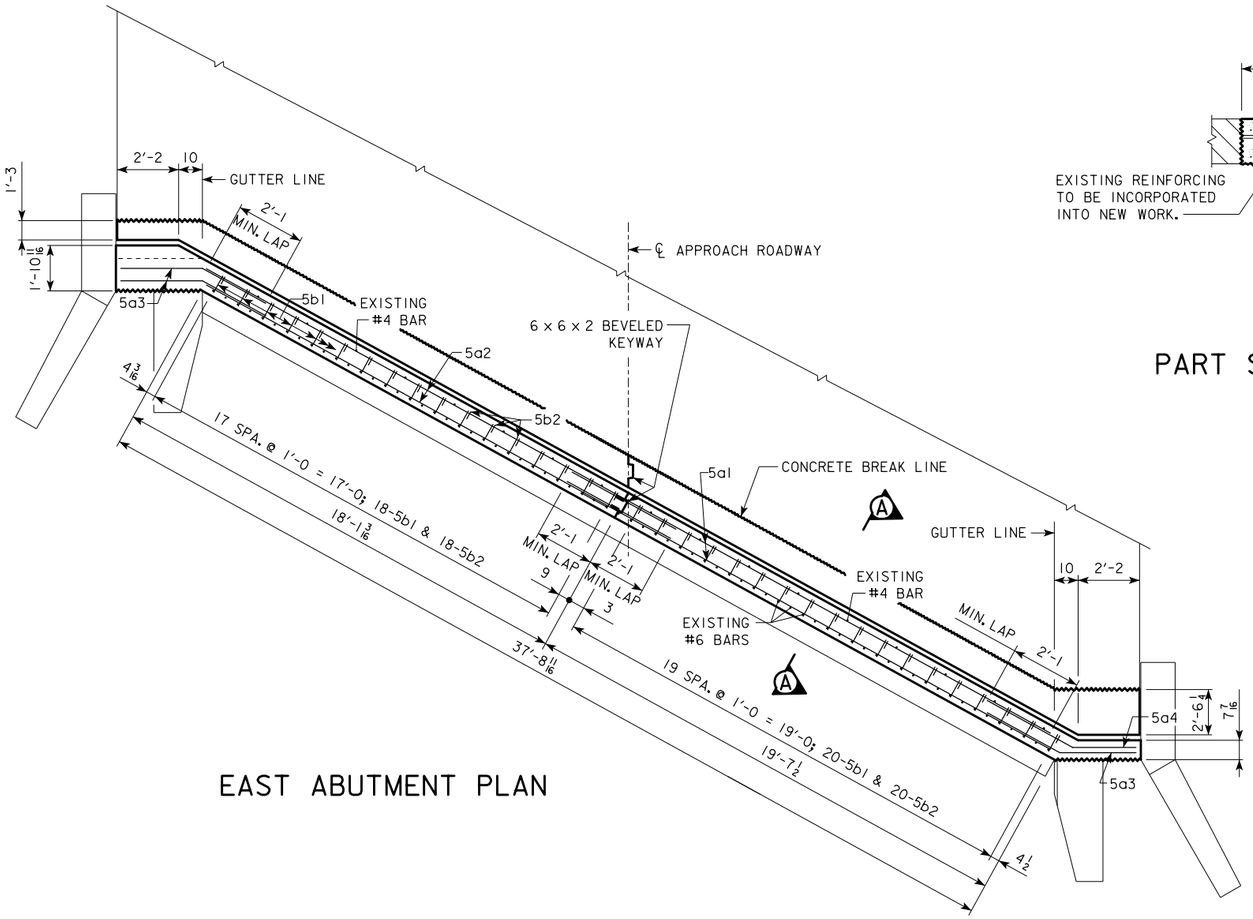

EAST ABUTMENT PLAN

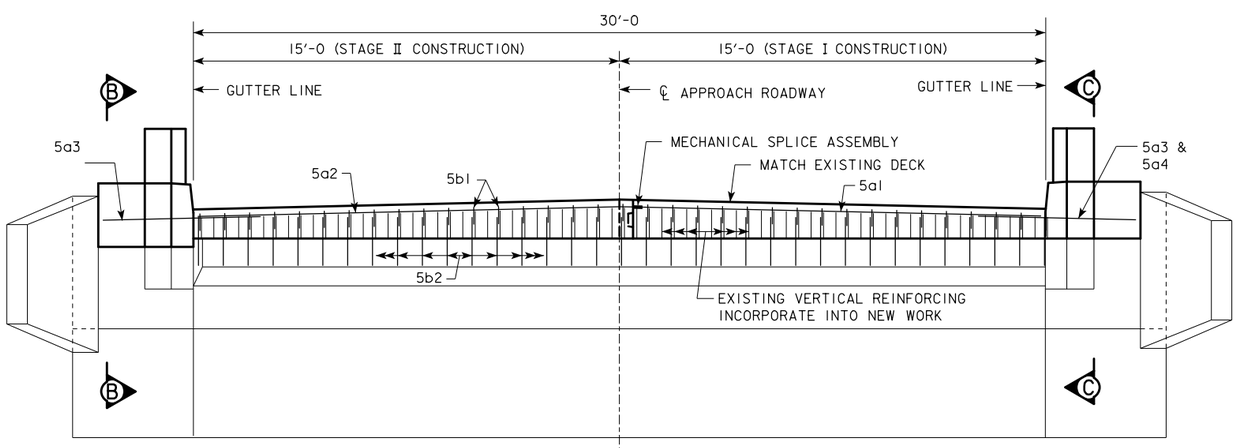

EAST ABUTMENT REAR ELEVATION

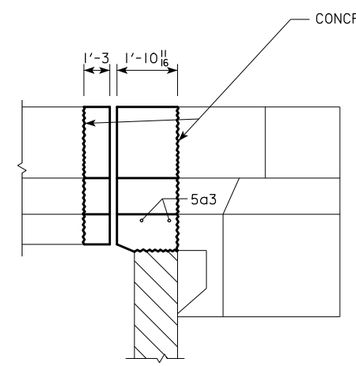

PART SECTION B-B

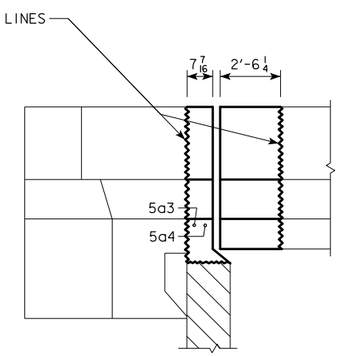

PART SECTION C-C

DESIGN FOR REPAIRS TO A 37° 19' L.A. SKEW

190'-0 x 30'-0 CONTINUOUS I-BEAM BRIDGE

58'-0 END SPANS — 74'-0 INTERIOR SPAN

EAST ABUTMENT REPAIR DETAILS

STA. 583+37.00 (US 34) — OCTOBER, 2013

MONROE COUNTY

IOWA DEPARTMENT OF TRANSPORTATION - HIGHWAY DIVISION

DESIGN SHEET NO. 6 OF 13 FILE NO. 30708 DESIGN NO. 113

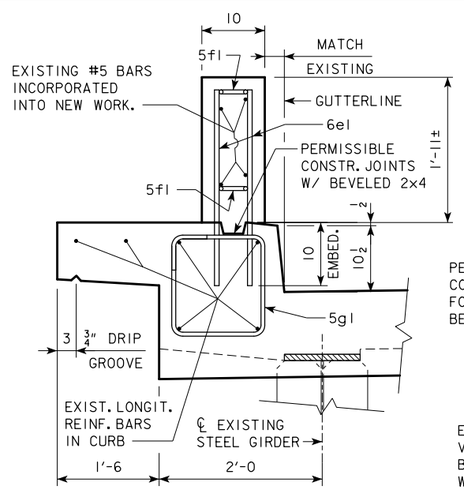

SECTION F-F

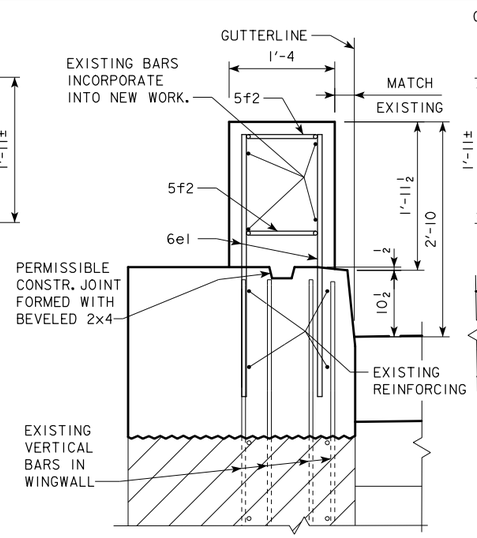

SECTION G-G

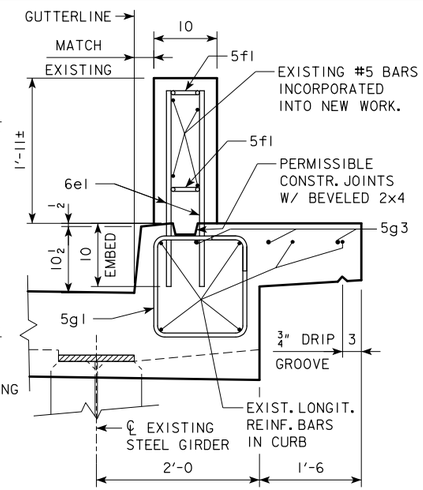

SECTION J-J

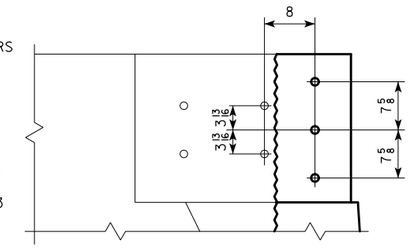

SECTION H-H

PROVIDE 3 HOLES FORMED WITH 1"Φ PLASTIC CONDUITON EACH SIDE. COST TO BE INCLUDED IN UNIT PRICE BID FOR "STRUCTURAL CONCRETE (MISC)".

NOTE:
FIELD CUT EXISTING BARS TO MAINTAIN 2" MINIMUM CLEARANCE.

EPOXY COATED REINF. BAR LIST - ONE END

BAR	LOCATION	SHAPE	NO.	LENGTH	WEIGHT
6e1	BARRIER RAIL, VERTICAL	——	10	2'-7	39
5f1	BARRIER RAIL, HORIZONTAL HAIRPIN	⊐	4	2'-4	10
5f2	BARRIER RAIL, HORIZONTAL HAIRPIN	⊐	2	1'-5	3
5f3	BARRIER RAIL, HORIZONTAL HAIRPIN	⊐	2	2'-9	6
5g1	CURB TRANSVERSE HOOP	□	5	6'-0	31
5g2	WALL, LONGITUDINAL	——	6	0'-11	6
5g3	CURB, LONGITUDINAL	——	3	2'-2	7
	REINFORCING STEEL EPOXY COATED - TOTAL (LBS)				102

BENT BAR DETAILS

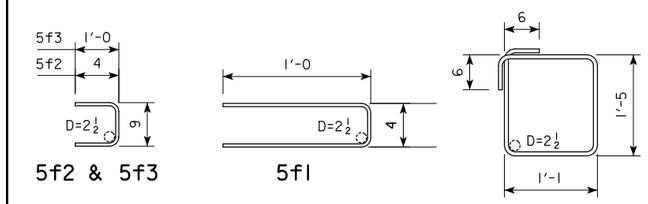

NOTE: ALL DIMENSIONS ARE OUT TO OUT. D=PIN DIAMETER

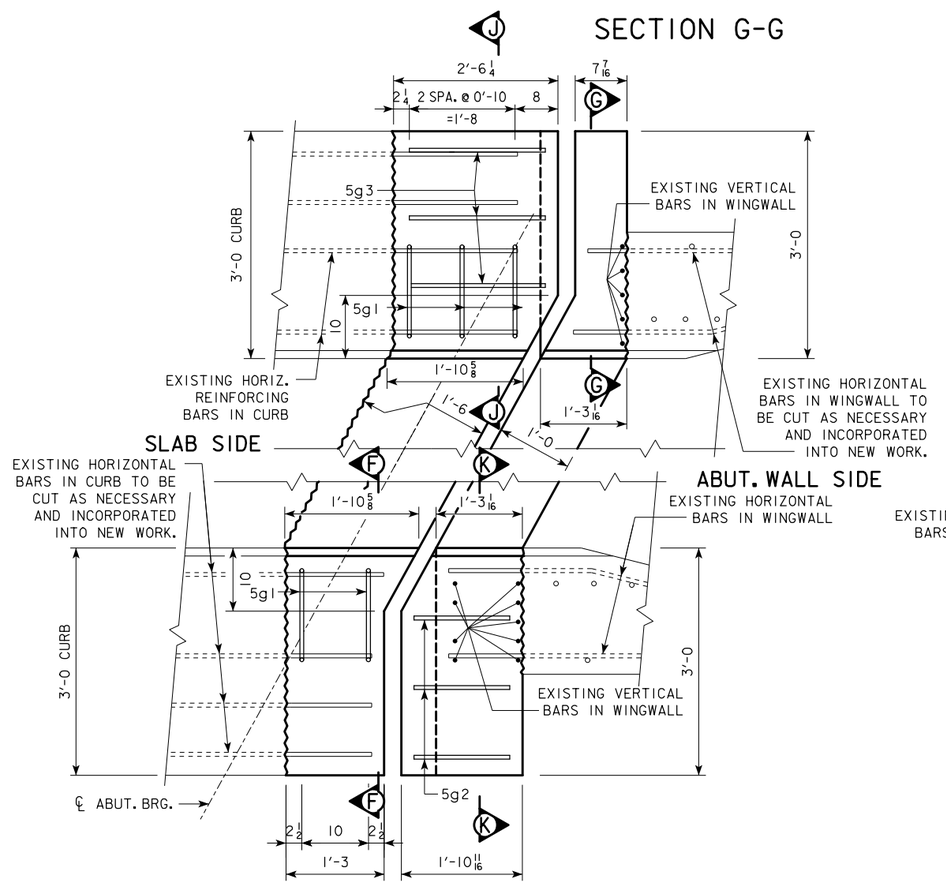

PART PLAN
(RAIL NOT SHOWN)

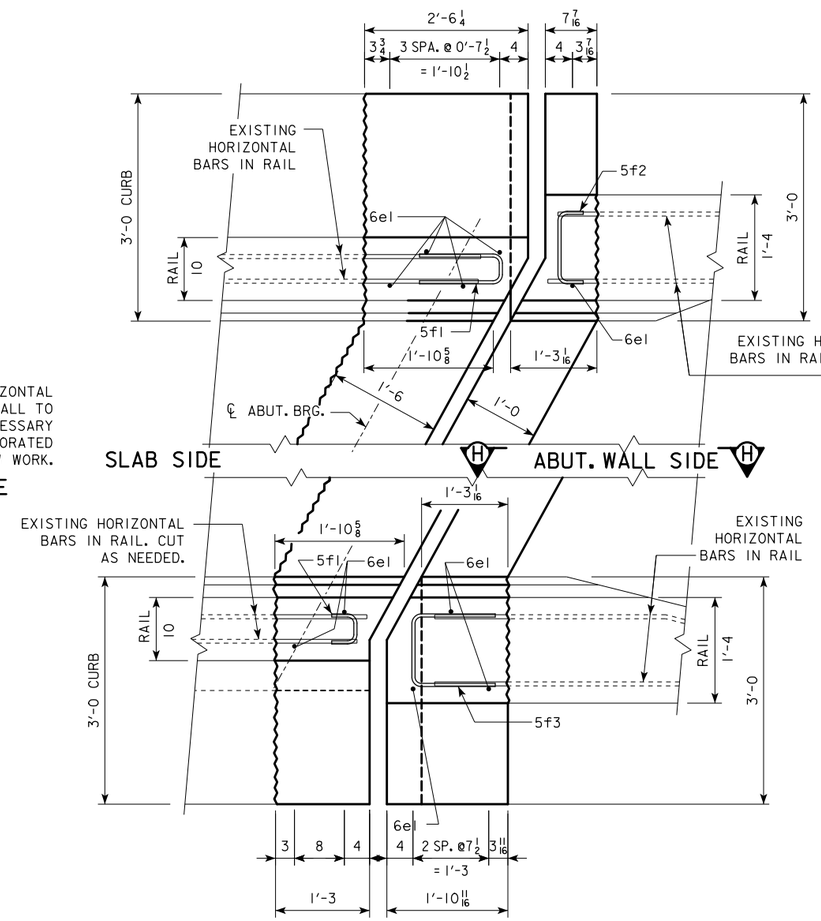

PART PLAN
(SHOWING RAIL)

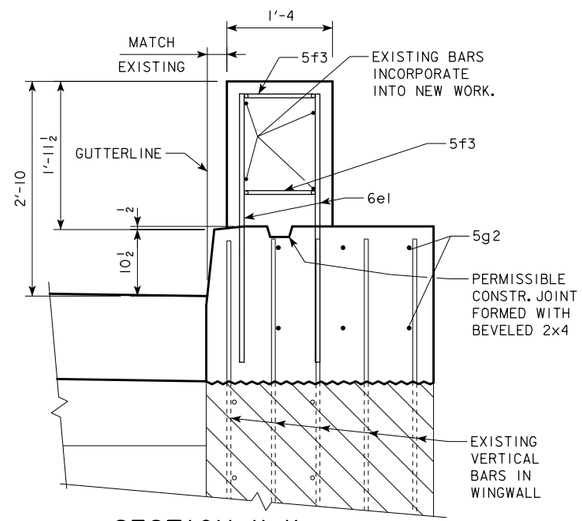

SECTION K-K

DESIGN FOR REPAIRS TO A 37° 19' L.A. SKEW

190'-0 x 30'-0 CONTINUOUS I-BEAM BRIDGE

58'-0 END SPANS — 74'-0 INTERIOR SPAN

EAST ABUTMENT REPAIR DETAILS

STA. 583+37.00 (US 34) — OCTOBER, 2013

MONROE COUNTY

IOWA DEPARTMENT OF TRANSPORTATION - HIGHWAY DIVISION

DESIGN SHEET NO. 7 OF 13 FILE NO. 30708 DESIGN NO. 113

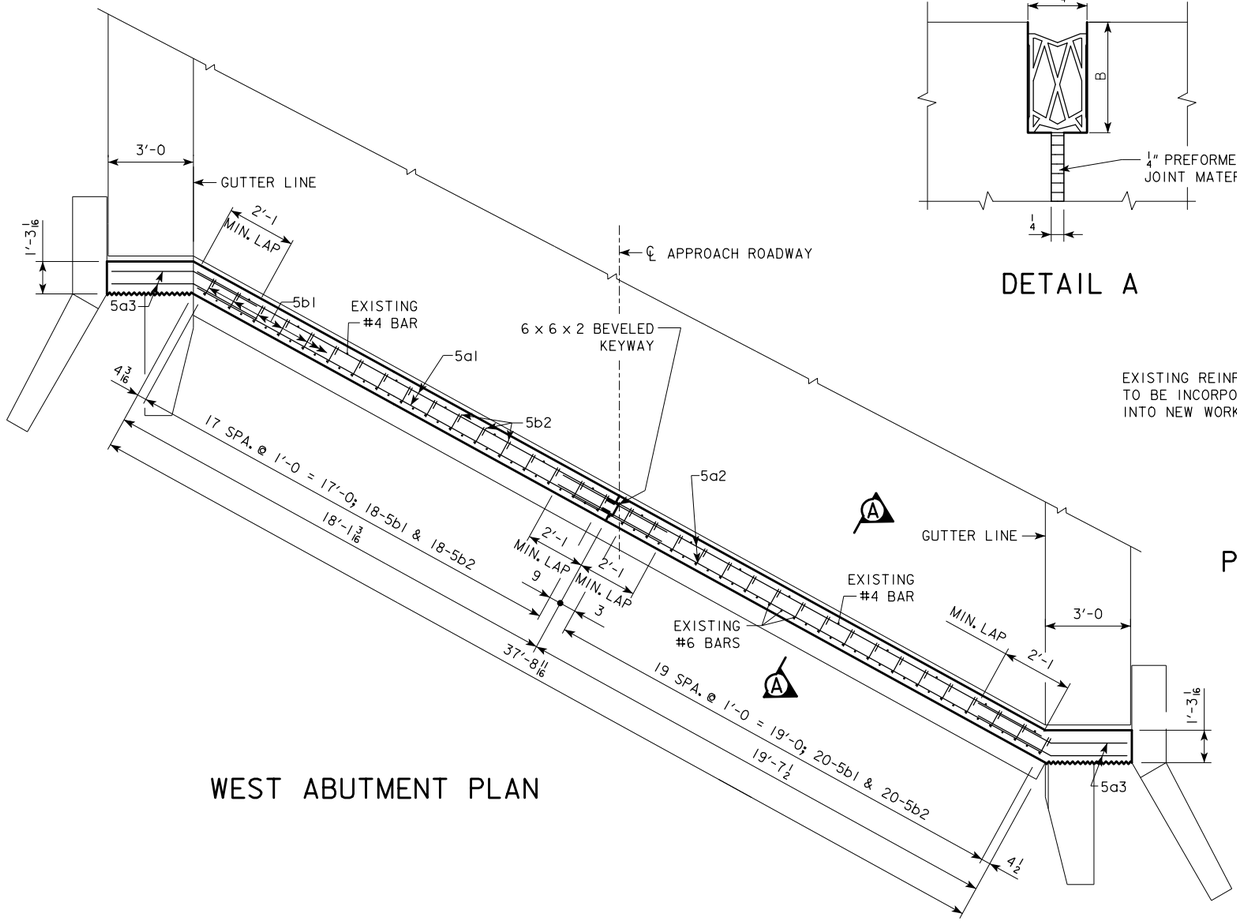

WEST ABUTMENT PLAN

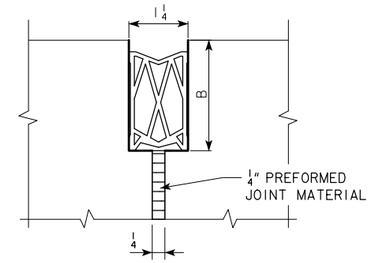

DETAIL A

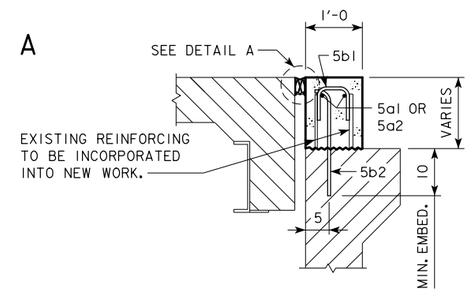

PART SECTION A-A

EPOXY REINFORCING BAR LIST - ONE ABUTMENT

BAR	LOCATION	SHAPE	NO.	LENGTH	WEIGHT
5a1	BACKWALL, TRANSV., STAGE 1	—	2	17'-11	37
5a2	BACKWALL, TRANSV., STAGE 2	—	2	19'-5	41
5a3	BACKWALL TO CURB DOWELS	⌐	4	5'-7	23
5b1	BACKWALL HAIRPIN	⊏	38	1'-10	73
5b2	BACKWALL, VERTICAL, DOWEL	L	38	1'-9	69
	EPOXY REINFORCING - TOTAL (LBS.)				243

BENT BAR DETAILS

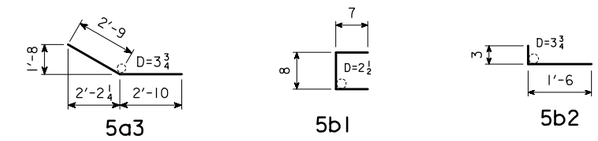

NOTE: ALL DIMENSIONS ARE OUT TO OUT. D = PIN DIAMETER.

NOTE:
THE NUMBER OF FEET OF PREFORMED ELASTIC NEOPRENE JOINT INSTALLED SHALL BE PAID FOR AT THE CONTRACT UNIT PRICE PER FOOT BASED ON PLAN QUANTITIES. THE PRICE FOR "PREFORMED ELASTIC NEOPRENE JOINT" SHALL BE FULL COMPENSATION FOR INSTALLING THE NEW JOINT AND RECONSTRUCTING THE GROOVE IN THE EXISTING DECK AND NEW TOP OF BACK WALL.

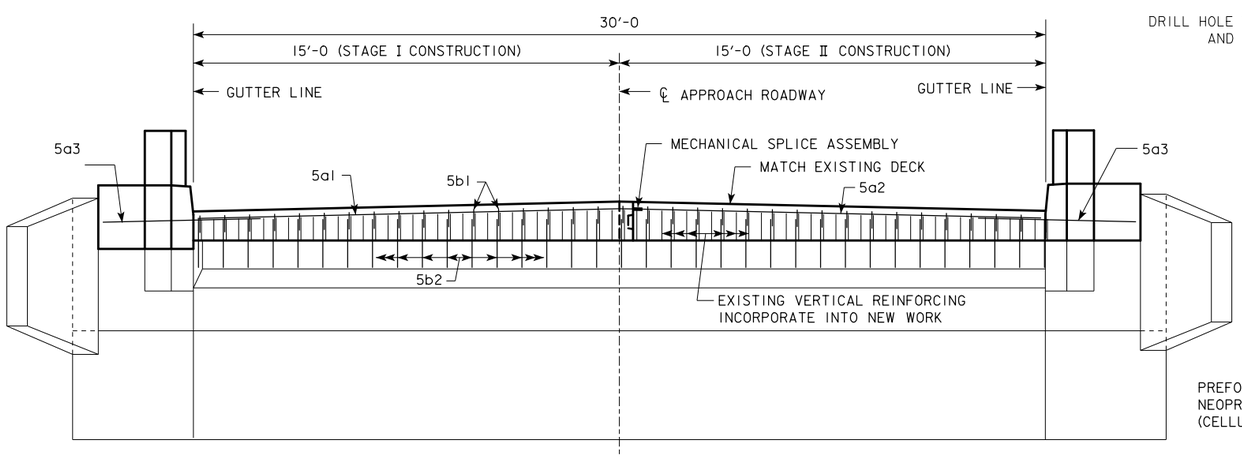

WEST ABUTMENT REAR ELEVATION

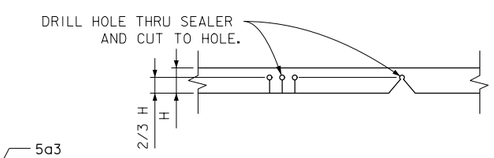

TYPICAL BEND DETAIL
FOR COMPRESSION SEAL

TABLE OF APPROVED EXPANSION DEVICES

MANUFACTURER	TYPE	GROOVE DEPTH "B"	
WATSON BOWMAN AND ACME CORP.	WG-200	1 1/2"	
DS BROWN	CV-1752	2 7/16"	
APPROVED EQUAL			

NOTE:
THE GROOVE FOR THE PREFORMED ELASTIC NEOPRENE JOINT SHALL BE RECONSTRUCTED IN THE EXISTING DECK AND TOP OF BACKWALL AS DETAILED ON THIS SHEET. THE SIDES OF THE GROOVE SHALL BE CUT SMOOTH AND ALLOW FOR PROPER SEALING BETWEEN THE CONCRETE AND COMPRESSION SEAL.

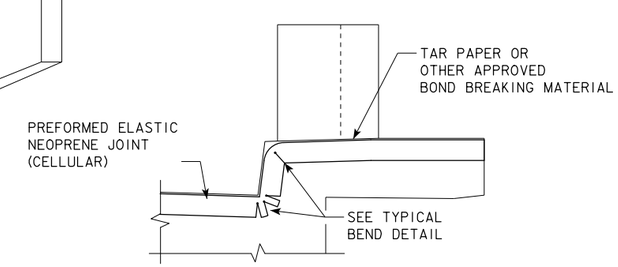

DESIGN FOR REPAIRS TO A 37° 19' L.A. SKEW

190'-0 x 30'-0 CONTINUOUS I-BEAM BRIDGE

58'-0 END SPANS 74'-0 INTERIOR SPAN

WEST ABUTMENT REPAIR DETAILS

STA. 583+37.00 (US 34) OCTOBER, 2013

MONROE COUNTY

IOWA DEPARTMENT OF TRANSPORTATION - HIGHWAY DIVISION

DESIGN SHEET NO. 8 OF 13 FILE NO. 30708 DESIGN NO. 113

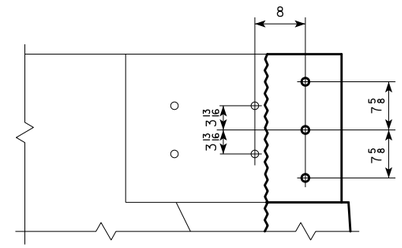

SECTION H-H

PROVIDE 3 HOLES FORMED WITH 1"Φ PLASTIC CONDUITON EACH SIDE. COST TO BE INCLUDED IN UNIT PRICE BID FOR "STRUCTURAL CONCRETE (MISC)".

EPOXY COATED REINF. BAR LIST - ONE END

BAR	LOCATION	SHAPE	NO.	LENGTH	WEIGHT
6e1	BARRIER RAIL, VERTICAL	——	6	2'-7	23
5f1	BARRIER RAIL, HORIZONTAL HAIRPIN	⊐	4	2'-7	11
5g1	WALL, LONGITUDINAL	——	12	0'-11	11
	REINFORCING STEEL EPOXY COATED - TOTAL (LBS)				45

BENT BAR DETAILS

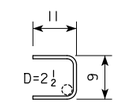

5f1

NOTE: ALL DIMENSIONS ARE OUT TO OUT. D=PIN DIAMETER

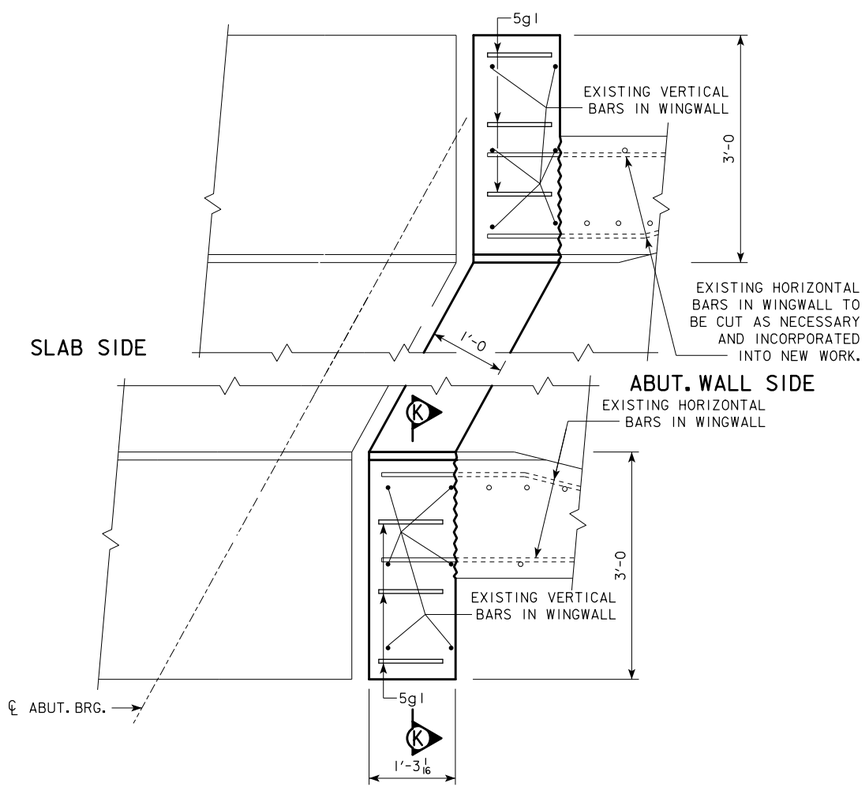

PART PLAN

(RAIL NOT SHOWN)

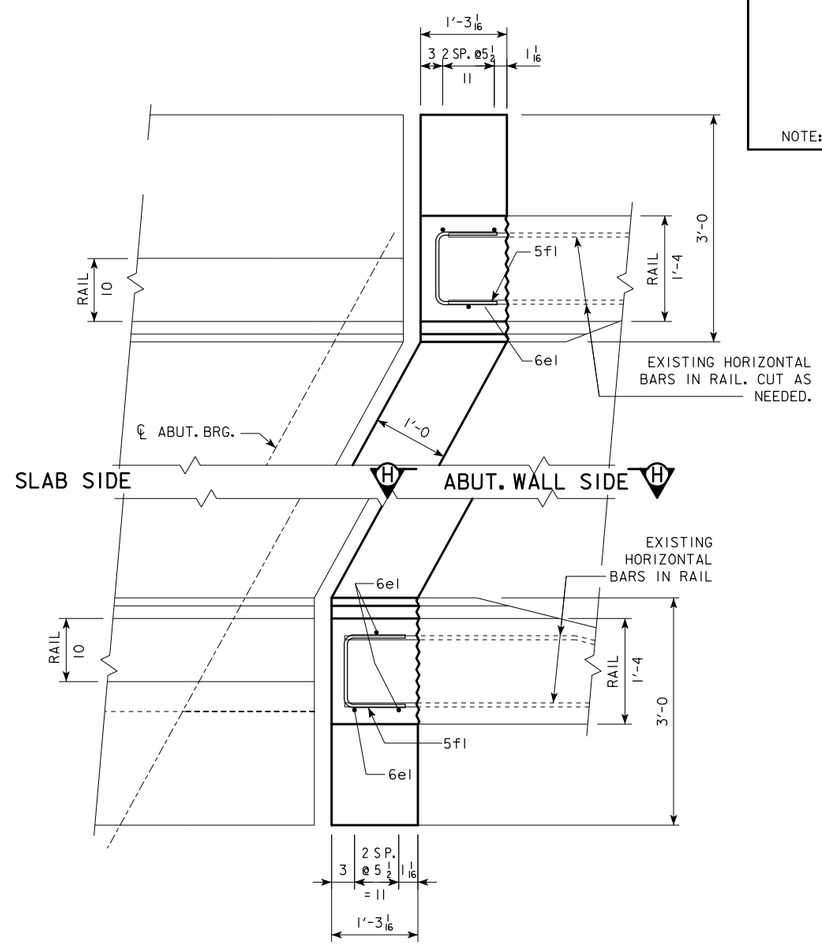

PART PLAN

(SHOWING RAIL)

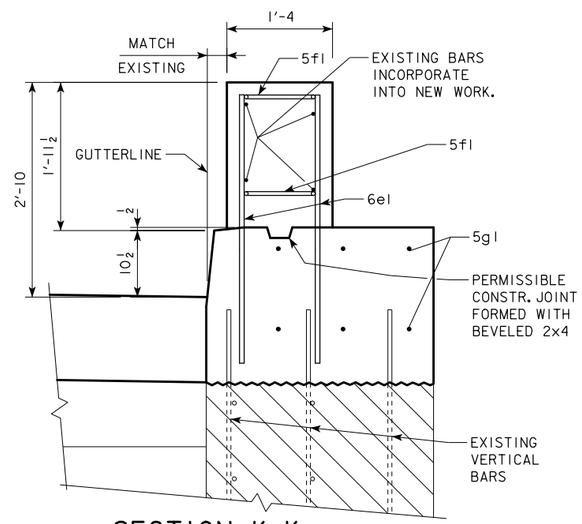

SECTION K-K

DESIGN FOR REPAIRS TO A 37° 19' L.A. SKEW

190'-0 x 30'-0 CONTINUOUS I-BEAM BRIDGE

58'-0 END SPANS 74'-0 INTERIOR SPAN

WEST ABUTMENT REPAIR DETAILS

STA. 583+37.00 (US 34) OCTOBER, 2013

MONROE COUNTY

IOWA DEPARTMENT OF TRANSPORTATION - HIGHWAY DIVISION

DESIGN SHEET NO. 9 OF 13 FILE NO. 30708 DESIGN NO. 113

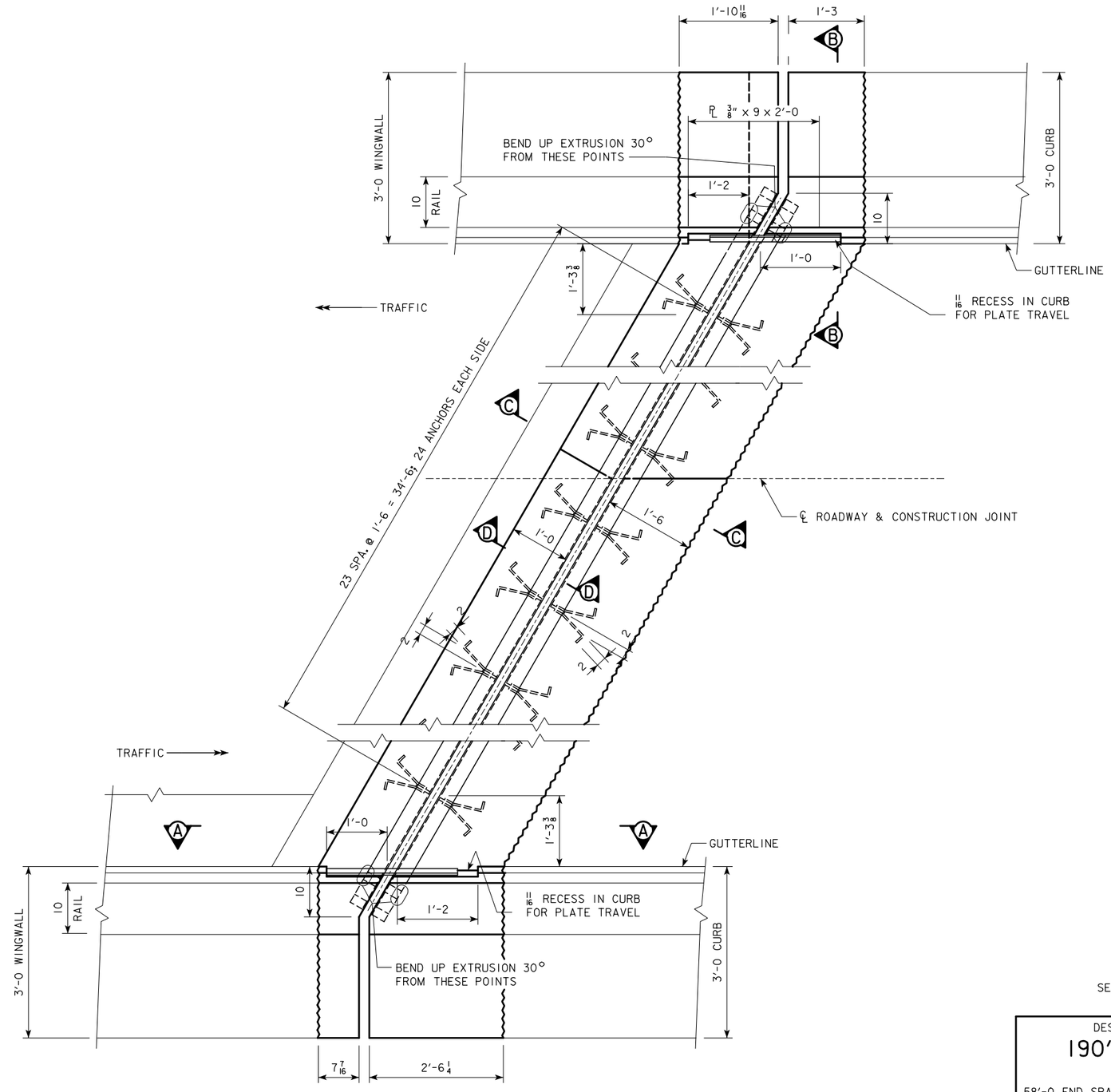

PART PLAN

(RAIL SHOWN)
EAST ABUTMENT SHOWN

SEE DESIGN SHEET NO. 11 FOR DETAILS OF SECTIONS A-A, B-B, C-C, AND D-D.

DESIGN FOR REPAIRS TO A 37° 19' L.A. SKEW

190'-0 x 30'-0 CONTINUOUS I-BEAM BRIDGE

58'-0 END SPANS 74'-0 INTERIOR SPAN

EAST ABUT. EXPANSION DEVICE DETAILS

STA. 583+37.00 (US 34) OCTOBER, 2013

MONROE COUNTY

IOWA DEPARTMENT OF TRANSPORTATION - HIGHWAY DIVISION

DESIGN SHEET NO. 10 OF 13 FILE NO. 30708 DESIGN NO. 113

STAGE CONSTRUCTION NOTES:

FIELD SPLICES IN THE STEEL EXTRUSION SHALL BE MADE IN THE LOCATIONS DETAILED. PIECES SHALL BE JOINED WITH A PRE-QUALIFIED PARTIAL PENETRATION SINGLE-V-GROOVE WELD AS DETAILED. ALL SURFACES NOT IN CONTACT WITH CONCRETE ARE TO BE GROUND FLUSH. NO WELD SHALL BE PERMITTED IN THE INTERNAL SECTION OF THE EXTRUSION WHERE THE NEOPRENE GLAND IS TO BE LOCATED.

STEEL EXTRUSIONS ARE TO BE INSTALLED IN STAGES.

GALVANIZED COATING DAMAGED BY FIELD WELDING SHALL BE REPAIRED IN ACCORDANCE WITH MATERIALS IM 140.

ALL CURB PLATES INCLUDING THEIR ANCHORAGES SHALL BE GALVANIZED.

NOTE:
SEE DESIGN SHEET 10 FOR EXPANSION DEVICE NOTES CONTAINING THE STEEL EXTRUSION NOTES, NEOPRENE GLAND NOTES, AND WATERTIGHT INTEGRITY TESTING AND REPAIR NOTES.

NOTE:
JOINT SETTINGS FOR OTHER TEMPERATURES ARE PROPORTIONAL. TEMPERATURES SHOWN ARE CONCRETE DECK TEMPERATURES ON THE UNDERSIDE OR SHADED PORTION OF THE DECK.

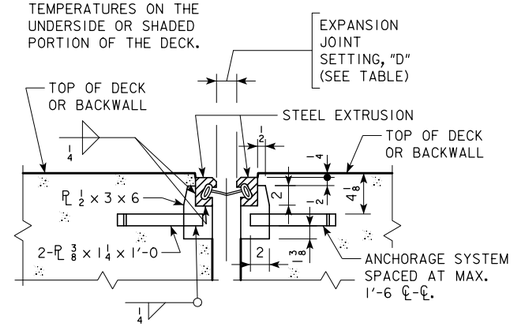

SECTION C-C

∗ M.I.T. = MAXIMUM INSTALLATION TEMPERATURE.

TABLE OF JOINT SETTINGS				
NEOPRENE GLAND	∗ M.I.T.	JOINT OPENING "D" AT TEMP. OF		
		90°F	50°F	10°F
SE-300	90°	1 1/2"	2"	2 7/16"

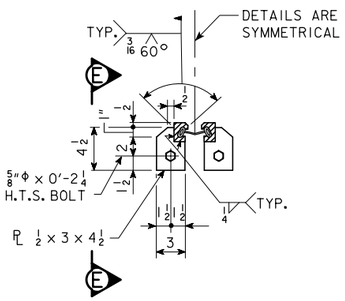

EXTRUSION FIELD SPLICE DETAIL

SECTION D-D

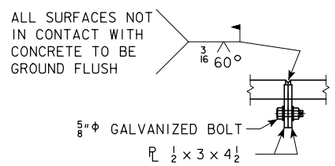

VIEW E-E

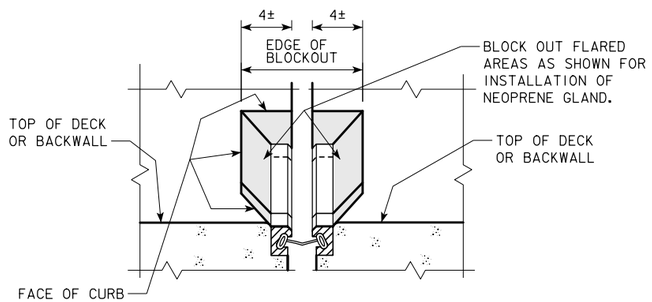

BLOCKOUT DETAIL

(NOT SHOWING CURB COVER PLATE)
(DRAWN FOR 0° SKEW FOR ILLUSTRATION PURPOSES)

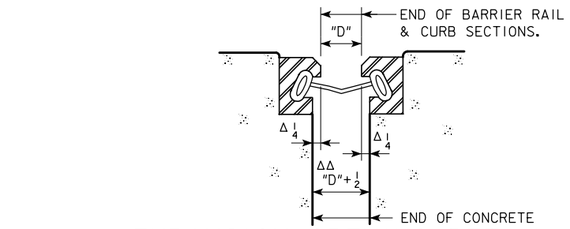

EXPANSION OPENING DETAIL

Δ THIS DIMENSION MAY VARY SLIGHTLY DEPENDING ON MANUFACTURER FURNISHING THE JOINT.

ΔΔ USED FOR ALL OUT TO OUT DIMENSIONS OF SLAB. THE DIMENSION MAY VARY SLIGHTLY DEPENDING ON MANUFACTURER FURNISHING THE JOINT.

CONTRACTOR TO NOTE THAT THE CAP SCREW ANCHORAGE SYSTEM FOR THE 3/8" BARRIER PLATES ARE ALWAYS TO BE PLACED ON THE ONCOMING TRAFFIC SIDE.

NOTE: IT IS INTENDED THAT THE 11/16 INCH RECESSED AREA BE FORMED SO THAT WHEN THE 3/8" BENT PLATE IS INSTALLED THE PLATE WILL BE ABLE TO MOVE FREELY IN THIS RECESSED AREA.

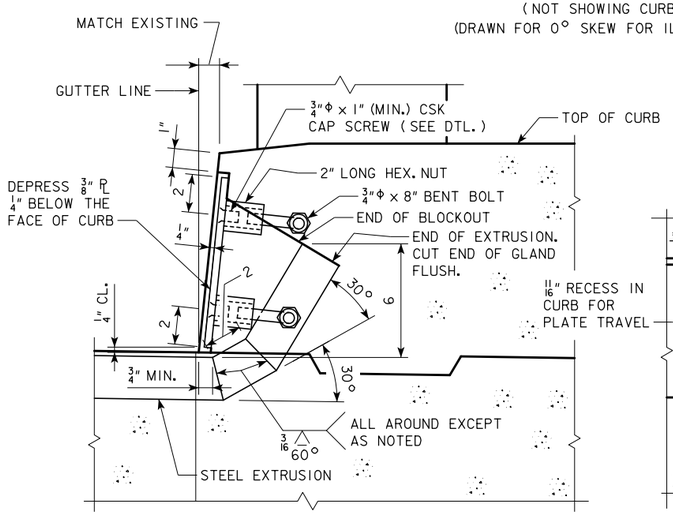

SECTION B-B

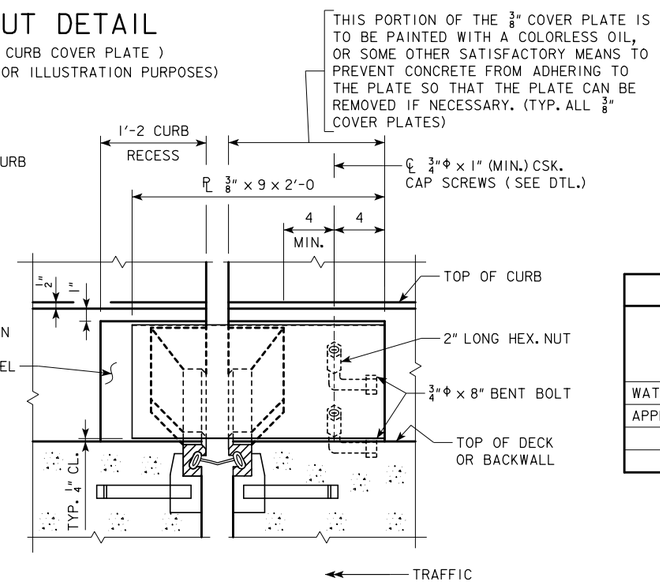

SECTION A-A

(DRAWN FOR 0° SKEW FOR ILLUSTRATION PURPOSES)

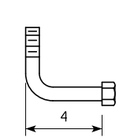

3/4Φ x 8" BENT BOLT DETAIL

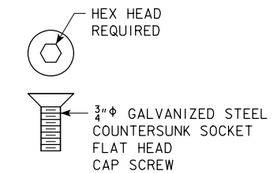

CAP SCREW DETAIL

TABLE OF APPROVED EXPANSION DEVICES			
MANUFACTURER	TYPE OF STEEL EXTRUSION	NEOPRENE GLAND	MINIMUM OPENING FOR GLAND INSTALLATION
WATSON-BOWMAN & ACME CORP.	A	SE-300	1 1/2"
APPROVED EQUAL			

CURB PLATE NOTE:

THE MATERIAL USED FOR THE CURB PLATES IS TO BE ASTM A-36 STEEL. THE BOLTS SHALL MEET THE REQUIREMENTS OF ASTM A-307. THE PLATES, BOLTS, NUTS, AND CAP SCREWS ARE TO BE GALVANIZED IN ACCORDANCE WITH ARTICLE 4100.07 OF THE STANDARD SPECIFICATIONS.

SEE DESIGN SHEET NO. 10 FOR LOCATIONS OF SECTIONS A-A, B-B, C-C, AND D-D.

DESIGN FOR REPAIRS TO A 37° 19' L.A. SKEW

190'-0 x 30'-0 CONTINUOUS I-BEAM BRIDGE

58'-0 END SPANS 74'-0 INTERIOR SPAN

EAST ABUT. EXPANSION DEVICE DETAILS

STA. 583+37.00 (US 34) OCTOBER, 2013

MONROE COUNTY

IOWA DEPARTMENT OF TRANSPORTATION - HIGHWAY DIVISION

DESIGN SHEET NO. 11 OF 13 FILE NO. 30708 DESIGN NO. 113

STEEL EXTRUSION NOTES:

THE CONTRACTOR SHALL SUBMIT FOR APPROVAL SHOP DRAWINGS OF THE EXPANSION DEVICES SHOWING LAYOUT, MATERIAL TO BE USED, AND PROVISIONS FOR THE HOLDING DEVICE DURING PLACEMENT OF CONCRETE.

THE EXPANSION DEVICE SHALL BE GALVANIZED AFTER WELDING. ALL CURB PLATES INCLUDING THEIR ANCHORAGES SHALL BE GALVANIZED.

THE EXPANSION DEVICE IS TO BE PARALLEL TO GRADE.

CAP SCREWS SHALL BE COUNTERSUNK $\frac{1}{16}$" BELOW TOP OF THE PLATE. THE MINIMUM GRADE OF STRUCTURAL STEEL FOR THE EXPANSION DEVICE SHALL BE ASTM A36.

BLOCKOUT DETAILS MAY BE ALTERED FROM THOSE SHOWN PROVIDED THE GLAND MAY BE INSTALLED AND REMOVED IF NECESSARY AND THE CURB AREA REMAINS WATERTIGHT.

SHOP SPLICES OF THE STEEL EXTRUSION WILL BE PERMITTED. PRIOR TO MAKING SHOP SPLICES STEEL EXTRUSION PIECES SHALL HAVE A MINIMUM LENGTH OF 15 FEET. THE INDIVIDUAL LENGTH OF PIECES SHALL BE CHOSEN SO THAT A MINIMUM NUMBER OF SPLICES IS REQUIRED. ALL PIECES SHALL BE JOINED WITH A PREQUALIFIED PARTIAL PENETRATION SINGLE GROOVE WELD AS DETAILED, AND ALL SURFACES NOT IN CONTACT WITH CONCRETE ARE TO BE GROUND FLUSH. NO WELD SHALL BE PERMITTED IN THE INTERNAL SECTION OF THE EXTRUSION WHERE THE NEOPRENE GLAND IS TO BE LOCATED.

THE NUMBER OF FEET OF STEEL EXTRUSION INSTALLED SHALL BE PAID FOR AT THE CONTRACT PRICE PER FOOT BASED ON PLAN QUANTITIES. THE PRICE BID FOR "STEEL EXTRUSION JOINT W/NEOPRENE" SHALL INCLUDE THE COST OF FURNISHING BUT NOT THE COST OF INSTALLING THE NEOPRENE GLAND. THE CONTRACT PRICE BID FOR "STEEL EXTRUSION JOINT W/NEOPRENE" SHALL BE FULL COMPENSATION FOR FURNISHING AND INSTALLING STEEL EXTRUSIONS. THIS WORK WILL CONSIST OF FURNISHING ALL REQUIRED MATERIALS, (INCLUDING THE $\frac{3}{8}$" PLATES AT THE CURBS AND THEIR ANCHORAGE SYSTEMS), AND THE INSTALLATION AND ADJUSTMENT OF THE EXPANSION JOINTS IN ACCORDANCE WITH THE DETAILS SHOWN ON THE PLANS AND AS DIRECTED BY THE ENGINEER. THE FURNISHING AND INSTALLATION OF ALL NECESSARY HARDWARE AND ACCESSORIES AS SUPPLIED BY THE EXPANSION JOINT MANUFACTURER ARE TO BE INCLUDED IN THIS WORK, INCLUDING THE ANCHORAGE SYSTEM AND ANY TEMPORARY ERECTION MATERIAL. ALL WORK AND MATERIALS FOR THE INSTALLATION OF THE EXPANSION JOINTS ARE TO COMPLY WITH THE WRITTEN RECOMMENDATIONS OF THE EXPANSION JOINT MANUFACTURER.

NEOPRENE GLAND NOTES:

THE NEOPRENE GLAND IS TO BE PLACED AS ONE CONTINUOUS PIECE FROM END TO END OF THE STEEL EXTRUSION.

THE NEOPRENE GLAND SHALL CONFORM TO ASTM-2628 MODIFIED TO EXCLUDE RECOVER TEST AND COMPRESSION SET.

THE CONTRACTOR SHALL INSTALL THE GLAND ABOVE THE MINIMUM TEMPERATURE OF 45° AND THE MINIMUM OPENING SHOWN IN THESE PLANS. THE DECK TEMPERATURE SHALL BE MEASURED BY RECORDING THE SURFACE TEMPERATURES ON THE UNDERSIDE OF THE DECK ADJACENT TO THE JOINTS. IF THE DECK TEMPERATURE DOES NOT FALL WITHIN THE SPECIFIED TEMPERATURE RANGE BEFORE THE CONTRACTOR HAS COMPLETED ALL OTHER REQUIRED WORK, IT WILL BE NECESSARY FOR THE CONTRACTOR TO RETURN TO THE PROJECT SITE TO COMPLETE INSTALLATION AND TESTING OF THE NEOPRENE GLAND. IF THE CONTRACTOR IS REQUIRED TO RETURN TO THE PROJECT SITE AFTER ALL OTHER REQUIRED WORK HAS BEEN COMPLETED, THE CONTRACTOR SHALL COMPLETE INSTALLATION AND TESTING OF NEOPRENE GLAND AT NO EXTRA CHARGE TO THE STATE.

THE NUMBER OF FEET OF NEOPRENE GLAND INSTALLED SHALL BE PAID FOR AT THE CONTRACT PRICE PER FOOT BASED ON PLAN QUANTITIES. THE PRICE FOR "NEOPRENE GLAND INSTALLATION AND TESTING" SHALL BE FULL COMPENSATION FOR INSTALLING AND TESTING OF THE NEW NEOPRENE GLAND. THIS WORK WILL CONSIST OF CLEANING THE EXTRUSION, INSTALLATION OF THE NEOPRENE GLAND AND WATER TIGHT TESTING OF THE EXPANSION JOINT SYSTEM. ALL WORK AND MATERIALS NECESSARY FOR THE INSTALLATION OF THE NEOPRENE GLAND SHALL COMPLY WITH THE RECOMMENDATIONS OF THE EXPANSION JOINT MANUFACTURER. THE PRICE BID FOR "NEOPRENE GLAND INSTALLATION AND TESTING" SHALL INCLUDE ALL WATERTIGHT INTEGRITY TESTING, LEAK REPAIRS AS DIRECTED BY THE ENGINEER, AND SUBSEQUENT WATERTIGHT TESTING UNTIL A LEAK FREE INSTALLATION IS ACHIEVED.

WATERTIGHT INTEGRITY TESTING AND REPAIR NOTES:

AFTER INSTALLATION OF EACH NEOPRENE GLAND, THE CONTRACTOR SHALL PERFORM WATERTIGHT INTEGRITY TESTS AT THE DECK LEVEL TO DETECT ANY LEAKAGE. THE TESTS ARE TO CHECK FOR LEAKAGE AT THE UPTURNED ENDS OF THE EXPANSION DEVICE AND FOR LEAKAGE ALONG THE EXPANSION DEVICE ACROSS THE DECK AND ANY MEDIANS OR SIDEWALKS. THE CONTRACTOR MAY CONDUCT A SINGLE TEST OF THE ENTIRE DEVICE INCLUDING UPTURNED ENDS OR MAY CONDUCT SEPARATE TESTS OF UPTURNED ENDS AND ONE OR MORE TESTS OF OVERLAPPING LENGTHS BETWEEN THE UPTURNED ENDS.

AT EACH UPTURNED END OF THE EXPANSION DEVICE, THE CONTRACTOR SHALL BLOCK OUT ON THE DECK AT LEAST 3 FEET OF THE EXPANSION DEVICE LEADING TO THE UPTURNED END AND FLOOD THE AREA. A MINIMUM WATER DEPTH OF 3" SHALL BE MAINTAINED AT THE GUTTERLINE FOR AT LEAST 30 MINUTES. DURING THE TEST, THE INSPECTOR SHALL OBSERVE FOR ANY OVERFLOW AT THE UPTURNED END. AT THE CONCLUSION OF THE TEST THE INSPECTOR WILL EXAMINE THE UNDERSIDE OF THE JOINT FOR LEAKAGE. THE EXPANSION DEVICE IS CONSIDERED WATERTIGHT IF THE INSPECTOR OBSERVES NO OVERFLOW DURING THE TEST AND IF NO DRIPPING WATER OR WATER DROPLETS ARE VISIBLE IN THE UNDERDECK AREAS NEAR THE UPTURNED END.

THE CONTRACTOR SHALL TEST THE EXPANSION DEVICE BETWEEN UPTURNED ENDS BY BLOCKING OUT AND COVERING THE DEVICE WITH PONDED OR FLOWING WATER TO A DEPTH OF AT LEAST 1" AT ALL POINTS, FOR AT LEAST 30 MINUTES. VERTICAL CURB SURFACES MAY BE TESTED WITH AN UNNOZZLED HOSE DELIVERING APPROXIMATELY ONE GALLON PER MINUTE DIRECTED TO FLOW OVER THE ENTIRE CURB HEIGHT FOR 30 MINUTES. AT THE CONCLUSION OF THE TEST, THE INSPECTOR WILL EXAMINE THE UNDERSIDE OF THE JOINT FOR LEAKAGE. THE EXPANSION DEVICE IS CONSIDERED WATERTIGHT IF NO DRIPPING WATER OR WATER DROPLETS ARE VISIBLE IN THE UNDERDECK AREAS ALONG THE FULL LENGTH OF THE EXPANSION JOINT. DAMP CONCRETE THAT DOES NOT SHOW DRIPPING WATER OR WATER DROPLETS IS NOT CONSIDERED A SIGN OF LEAKAGE.

IF THE EXPANSION DEVICE LEAKS AT AN UPTURNED END OR ALONG ITS LENGTH, THE CONTRACTOR SHALL LOCATE THE LEAK(S) AND TAKE REPAIR MEASURES TO STOP THE LEAKAGE. THE REPAIR MEASURES SHALL BE AS RECOMMENDED BY THE MANUFACTURER AND APPROVED BY THE ENGINEER PRIOR TO BEGINNING CORRECTIVE WORK.

IF MEASURES TO ELIMINATE LEAKAGE ARE TAKEN, THE CONTRACTOR SHALL PERFORM SUBSEQUENT WATERTIGHT INTEGRITY TESTS SUBJECT TO THE SAME CONDITIONS AS THE ORIGINAL TEST.

DESIGN FOR REPAIRS TO A 37° 19' L.A. SKEW

190'-0 x 30'-0 CONTINUOUS I-BEAM BRIDGE

58'-0 END SPANS 74'-0 INTERIOR SPAN

EAST ABUT. EXPANSION DEVICE DETAILS

STA. 583+37.00 (US 34) OCTOBER, 2013

MONROE COUNTY

IOWA DEPARTMENT OF TRANSPORTATION - HIGHWAY DIVISION

DESIGN SHEET NO. 12 OF 13 FILE NO. 30708 DESIGN NO. 113

THIS IS A 3D FILE THAT CAN BE VIEWED ELECTRONICALLY.
YOU WILL BE ABLE TO ZOOM IN OR OUT, PAN, ROTATE, ETC.

THIS STRUCTURE SHALL BE CONSTRUCTED FROM DIMENSIONS SHOWN ON THE PREVIOUS SHEETS. THIS SHEET IS INTENDED TO CLARIFY THE DESIGN DETAILS AS AN AID IN REPAIR OF THE STRUCTURE. CLICK ON THE DEFAULT VIEW ICON (THE HOUSE ICON) IN ADOBE ACROBAT READER TO RETURN TO THE ORIGINAL VIEW.

D.S. BROWN EXPANSION DEVICE SHOWN. SIMILAR FOR WATSON-BOWMAN & ACME CORP. EXPANSION DEVICE.

DESIGN FOR REPAIRS TO A 37° 19' L.A. SKEW

190'-0 x 30'-0 CONTINUOUS I-BEAM BRIDGE

58'-0 END SPANS 74'-0 INTERIOR SPAN

3D VIEW FOR ELECTRONIC VIEWING

STA. 583+37.00 (US 34) OCTOBER, 2013

MONROE COUNTY

IOWA DEPARTMENT OF TRANSPORTATION - HIGHWAY DIVISION

DESIGN SHEET NO. 13 OF 13 FILE NO. 30708 DESIGN NO. 113

ESTIMATED BRIDGE REPAIR QUANTITIES

ITEM NO.	ITEM CODE	ITEM	UNIT	TOTAL	AS BUILT QUAN.
1	2104-2713020	EXCAVATION, CLASS 13, CHANNEL	CY	1,760.0	
2	2401-6750001	REMOVALS, AS PER PLAN	LS	1.00	
3	2402-0425031	GRANULAR BACKFILL	TON	2,300.0	
4	2403-0100000	STRUCTURAL CONCRETE (MISCELLANEOUS)	CY	40.8	
5	2404-7775005	REINFORCING STEEL, EPOXY COATED	LB	4,257	
6	2507-3250005	ENGINEERING FABRIC	SY	1,975.0	
7	2507-6800061	REVETMENT, CLASS E	TON	2,100.0	
8	2508-0970000	CONTAINMENT	LS	1.00	
9	2508-0991000	PAINTING OF STRUCTURAL STEEL	LS	1.00	
10	2533-4980005	MOBILIZATION	LS	1.00	

ESTIMATE REFERENCE INFORMATION

ITEM NO.	ITEM CODE	DESCRIPTION
1	2104-2713020	**EXCAVATION, CLASS 13, CHANNEL** INCLUDES ALL WORK IN PREPARATION OF GRADE FOR PLACEMENT OF REVETMENT INCLUDING EXCAVATION TO THE LIMITS SHOWN ON THE DRAWINGS, BACKFILL UTILIZING EXCAVATED MATERIAL, CUTTING EXISTING WOOD PILING AND VEGETATION, AND DISPOSAL OF EXCESS EXCAVATED MATERIAL. THE BOUNDING LIMITS IN ACCORDANCE WITH ARTICLE 2402.04, B, OF THE STANDARD SPECIFICATIONS ARE NOT APPLICABLE. EXCESS EXCAVATED MATERIAL SHALL BE DISPOSED OF BY THE CONTRACTOR OFF OF THE PROJECT SITE.
2	2401-6750001	**REMOVALS, AS PER PLAN** INCLUDES ALL WORK FOR REMOVAL AND OFF-SITE DISPOSAL OF PORTIONS OF THE EXISTING SLAB, CURB, RAIL, AND BACKWALL CONCRETE. REMOVAL OF SCHEDULED ITEMS SHALL BE IN ACCORDANCE WITH SECTION 2401, OF THE STANDARD SPECIFICATIONS. ANY DAMAGE TO MATERIAL NOT TO BE REMOVED SHALL BE THE RESPONSIBILITY OF THE CONTRACTOR AND REPAIRED AT NO EXTRA COST TO THE STATE.
3	2402-0425031	**GRANULAR BACKFILL** ESTIMATED AT 1.7 TON/CY. GRANULAR BACKFILL WILL BE MEASURED IN TONS OF MATERIAL PLACED. INCLUDES FURNISH AND PLACEMENT OF BACKFILL MATERIAL DUE TO AN ANTICIPATED DEFICIT IN ON-SITE EXCAVATED MATERIAL. GRANULAR BACKFILL SHALL NOT BE PROCURED AND DELIVERED TO THE SITE UNTIL COMPLETION OF ROUGH GRADING INDICATES ADDITIONAL MATERIAL IS NEEDED TO FINISH TO THE LINES AND GRADES SHOWN ON THE DRAWINGS, OR AS DIRECTED BY THE ENGINEER.
4	2403-0100000	**STRUCTURAL CONCRETE (MISCELLANEOUS)** INCLUDES CLEANING AND SEALING EXISTING CONCRETE RAIL, CURB AND ABUTMENT SEATS.
5	2404-7775005	**REINFORCING STEEL, EPOXY COATED** INCLUDES MECHANICAL SPLICERS IN THE ABUTMENT BACKWALL.
6	2507-3250005	**ENGINEERING FABRIC** ENGINEERING FABRIC SHALL BE MATERIAL AS SPECIFIED FOR EMBANKMENT EROSION CONTROL IN ACCORDANCE WITH ARTICLE 4196.01,B,3, OF THE STANDARD SPECIFICATIONS.
7	2507-6800061	**REVETMENT, CLASS E** ESTIMATED AT 1.6 TON/CY.
8	2508-0970000	**CONTAINMENT** - -
9	2508-0991000	**PAINTING OF STRUCTURAL STEEL** INCLUDES COST OF PREPARING AND PAINTING THE ABUTMENT BEARING STRUCTURAL STEEL AS NOTED IN THESE PLANS. REFER TO SECTION 2508 OF THE STANDARD SPECIFICATIONS.
10	2533-4980005	**MOBILIZATION** - -

NOTE:
ROADWAY QUANTITIES SHOWN ELSEWHERE IN THESE PLANS.

DESIGN FOR REPAIRS TO A 15° L.A. SKEW

205'-0 x 30'-0 PRESTRESSED PRETENSIONED CONCRETE BEAM BRIDGE

63'-11½ & 59'-9½ END SPANS 81'-3 INTERIOR SPAN

QUANTITIES

STA. 593+15.00 (US 34) OCTOBER, 2013

MONROE COUNTY

IOWA DEPARTMENT OF TRANSPORTATION - HIGHWAY DIVISION

DESIGN SHEET NO. 1 OF 8 FILE NO. 30708 DESIGN NO. 213

GENERAL NOTES

THIS DESIGN IS FOR REPAIRS TO THE EXISTING 205'-0 x 30'-0 PRETENSIONED PRESTRESSED CONCRETE BEAM BRIDGE, WITH A 15° L.A. SKEW, ON HWY 34 OVER CEDAR CREEK. COPIES OF ORIGINAL DESIGN PLANS WILL BE MADE AVAILABLE TO THE CONTRACTOR. CONTACT THE OFFICE OF CONTRACTS - HIGHWAY DIVISION - IOWA D.O.T. - AMES.

REPAIR SHALL CONSIST OF THE FOLLOWING:

1. INSTALL CONCRETE TEMPORARY BARRIER RAIL TO REDIRECT TRAFFIC AWAY FROM WORK AREA.
2. REMOVE ABUTMENT BACKWALLS, DIAPHRAGMS, CURB, AND BARRIER END SECTIONS AS DETAILED IN THIS PLAN.
3. CONSTRUCT SEMI-INTEGRAL ABUTMENTS.
4. SEAL THE ENDS OF ALL BEAMS FOR A DISTANCE OF 3 FEET AT BOTH ABUTMENT ENDS OF BEAMS.
5. CLEAN AND REPAINT THE RUSTED ABUTMENT BEARING PLATES.
6. CLEAN AND SEAL CONCRETE RAILS.
7. RECONSTRUCT RETROFIT RAIL END SECTIONS.
8. CONSTRUCT NEW 70' LONG APPROACH SECTIONS AND UPDATE GUARDRAIL.
9. RESHAPE BERMS AND PLACE RIPRAP.

CONSTRUCTION SHALL BE DONE IN STAGES WITH AT LEAST ONE LANE TRAFFIC MAINTAINED AT ALL TIMES IN ACCORDANCE WITH "TRAFFIC CONTROL PLAN" NOTE.

CONSTRUCTION STAGES 1 & 2 AS DETAILED ON THESE PLANS MAY BE REVERSED AT THE CONTRACTOR'S OPTION SUBJECT TO THE ENGINEER'S APPROVAL. SEE ROAD SHEETS INCLUDED IN THIS PLAN FOR DETAILS.

ALL DIMENSIONS AND DETAILS SHOWN ON THESE PLANS PERTINENT TO NEW CONSTRUCTION SHALL BE VERIFIED IN THE FIELD BY THE CONTRACTOR BEFORE STARTING CONSTRUCTION.

FAINT LINES ON PLANS INDICATE EXISTING PORTIONS OF THE BRIDGE.

MINIMUM CLEAR DISTANCE FROM FACE OF CONCRETE TO NEAR REINFORCING BAR IS TO BE 2" UNLESS OTHERWISE NOTED OR SHOWN.

UTILITY COMPANIES WHOSE FACILITIES ARE SHOWN ON THE PLANS OR KNOWN TO BE WITHIN THE CONSTRUCTION LIMITS SHALL BE NOTIFIED BY THE BRIDGE CONTRACTOR OF THE STARTING DATE.

THE BRIDGE CONTRACTOR WILL BE THE ONLY CONTRACTOR AT THE SITE AND IS RESPONSIBLE FOR THE COMPLETION OF ALL WORK AS DETAILED AND NOTED IN THESE PLANS.

ALL CONCRETE REMOVALS SHALL BE INITIATED WITH A $\frac{3}{4}$" SAWCUT. ALL SLAB AND LONGITUDINAL CURB AND RETROFIT RAIL REINFORCING EXPOSED IS TO BE INCORPORATED INTO NEW CONSTRUCTION.

KEYWAY DIMENSIONS SHOWN ON THE PLANS ARE BASED ON NOMINAL DIMENSIONS UNLESS STATED OTHERWISE. IN ADDITION, THE BEVEL USED ON THE KEYWAY SHALL BE LIMITED TO A MAXIMUM OF 10 DEGREES FROM VERTICAL.

IF NECESSARY TO PREVENT DAMAGE TO THE END OF THE BRIDGE DECK OR BACKWALL FROM CONSTRUCTION EQUIPMENT, AN APPROPRIATE METHOD OF PROTECTION APPROVED BY THE ENGINEER SHALL BE PROVIDED BY THE BRIDGE CONTRACTOR AT NO ADDITIONAL COST.

THE TOP AND INTERIOR FACES OF THE EXISTING CONCRETE RAILING AND ONE FOOT OF DECK FROM GUTTERLINE ARE TO BE CLEANED AND SEALED IN ACCORDANCE WITH STANDARD SPECIFICATION 2403.03,P,3. IF NEW SECTIONS OF RAIL ARE CONSTRUCTED, THE NEW SECTIONS SHALL NOT BE SEALED. ALL COSTS ASSOCIATED WITH CLEANING AND SEALING OF THE CONCRETE RAILS SHALL BE INCLUDED IN THE UNIT PRICE BID ITEM "STRUCTURAL CONCRETE (MISCELLANEOUS)".

THESE BRIDGE PLANS LABEL ALL REINFORCING STEEL WITH ENGLISH NOTATION (5a1 IS $\frac{5}{8}$ INCH DIAMETER BAR). ENGLISH REINFORCING STEEL RECEIVED IN THE FIELD MAY DISPLAY THE FOLLOWING "BAR DESIGNATION". THE "BAR DESIGNATION" IS THE STAMPED IMPRESSION ON THE REINFORCING BARS, AND IS EQUIVALENT TO THE BAR DIAMETER IN MILLIMETERS.

ENGLISH SIZE	3	4	5	6	7	8	9	10	11
BAR DESIGNATION	10	13	16	19	22	25	29	32	36

PRESENT FLOOR THICKNESS IS ABOUT $7\frac{1}{2}$ INCHES, INCLUDING THE EXISTING OVERLAY. THE CONTRACTOR SHALL EXERCISE CARE IN REMOVING CONCRETE IN ORDER TO PREVENT UNNECESSARY UNBONDING OF REINFORCING STEEL.

CLEANING THE ABUTMENT BEARING PLATES BY VACUUM BLASTING OR BY A NON-BLASTING METHOD IS REQUIRED. SURFACES SHALL BE PREPARED IN ACCORDANCE WITH STEEL STRUCTURES PAINTING COUNCIL (SSPC) SP3. SURFACES ARE TO BE GIVEN ONE COAT OF BOTH A RUST INHIBITOR TYPE PRIMER AND FINAL COAT AS APPROVED BY THE ENGINEER. THE COLOR OF THE DRY PAINT SHOULD APROXIMATE THE COLOR OF CONCRETE. THIS WORK SHALL BE INCLUDED IN THE PRICE BID ITEM "PAINTING OF STRUCTURAL STEEL".

A SCRAPE SAMPLE WAS TAKEN FROM AN AREA OF THIS BRIDGE TO GET AN INDICATION OF THE EXISTENCE OF AND LEVEL OF TOTAL CHROMIUM AND TOTAL LEAD. ANALYSIS OF TOTAL LEAD ON THIS SAMPLE WAS 8190 PPM. ANALYSIS OF TOTAL CHROMIUM ON THIS SAMPLE WAS 747 PPM. THESE ANALYSES SHOW THE EXISTENCE OF THESE TWO TOXIC CONSTITUENTS. LEVELS INDICATED BY THESE TESTS COULD CREATE CONDITIONS ABOVE REGULATORY LIMITS FOR HEALTH AND SAFETY REQUIREMENTS. NO OTHER CONSTITUENTS WERE ANALYZED. THE BIDDER SHOULD NOT RELY ON THE DEPARTMENT'S TESTING AND ANALYSIS FOR ANY PURPOSE OTHER THAN AS AN INDICATION OF THE EXISTENCE OF THESE TWO TOXIC CONSTITUENTS.

CONTAINMENT AND DISPOSAL OF WASTE SHALL BE IN ACCORDANCE WITH SECTION 2508. ALL COSTS ASSOCIATED WITH HAULING AND DEPOSITING OF WASTE AT THE DESIGNATED FACILITY SHALL BE THE RESPONSIBILITY OF THE CONTRACTOR AND INCLUDED IN THE PRICE BID FOR "CONTAINMENT".

THE SMALL AMOUNT OF EXCAVATION AND BACKFILL REQUIRED TO CONSTRUCT THE BACKWALL SHALL BE INCIDENTAL TO THE COST OF THE APPROACH PAVEMENT.

MECHANICAL COUPLES WILL BE REQUIRED FOR LONGITUDINAL REINFORCING STEEL IN THE ABUTMENT.

IT SHALL BE THE BRIDGE CONTRACTOR'S RESPONSIBILITY TO PROVIDE SITES FOR EXCESS MATERIAL (EXCAVATION OR BROKEN CONCRETE). NO PAYMENT FOR OVERHAUL WILL BE ALLOWED FOR MATERIAL HAULED TO THESE SITES.

IT WILL BE NECESSARY TO SUPPORT THE EARTH AND/OR GRANULAR MATERIAL BEHIND THE ABUTMENT DURING RECONSTRUCTION OF THE ABUTMENT BACKWALLS BY SOME METHOD APPROVED BY THE ENGINEER.

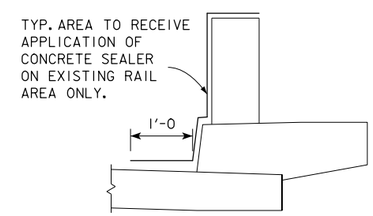

DETAIL OF CONCRETE SEALER AREA

BRIDGE SEAT SHALL RECIEVE APPLICATION OF CONCRETE SEALER AT ABUTMENTS.

LOCATION:

US 34 OVER CEDAR CREEK
T-72N R-18W
SECTIONS 26
GUILFORD TWP.
MONROE COUNTY
BRIDGE MAINT. NO. 6863.4S034
FHWA NO. 037390
LATITUDE 41.01111627
LONGITUDE -92.8950930

SPECIFICATIONS:

DESIGN: AASHTO SERIES OF 2002.
CONSTRUCTION: IOWA DEPARTMENT OF TRANSPORTATION STANDARD SPECIFICATIONS FOR HIGHWAY AND BRIDGE CONSTRUCTION, SERIES 2012, PLUS APPLICABLE GENERAL SUPPLEMENTAL SPECIFICATIONS, DEVELOPMENTAL SPECIFICATIONS, SUPPLEMENTAL SPECIFICATIONS AND SPECIAL PROVISIONS SHALL APPLY TO CONSTRUCTION WORK ON THIS PROJECT.

DESIGN STRESSES:

DESIGN STRESSES FOR THE FOLLOWING MATERIALS ARE IN ACCORDANCE WITH THE AASHTO STANDARD SPECIFICATIONS FOR HIGHWAY BRIDGES, SERIES OF 2002.
REINFORCING STEEL IN ACCORDANCE WITH SECTION 8, GRADE 60.
CONCRETE IN ACCORDANCE WITH SECTION 8, f'c = 3,500 PSI.

TRAFFIC CONTROL PLAN

NOTE: THE ROADWAY WILL BE OPEN TO THRU TRAFFIC. REFER TO THE TRAFFIC CONTROL PLAN SHOWN ELSEWHERE IN THESE PLANS.

DESIGN HISTORY AT THIS SITE

DES. NO.	TYPE OF WORK
562	ORIGINAL DESIGN
189	DECK OVERLAY & RETROFIT RAIL
202	BARRIER RAIL END SECTION

DESIGN FOR REPAIRS TO A 15° L.A. SKEW

205'-0 x 30'-0 PRESTRESSED PRETENSIONED CONCRETE BEAM BRIDGE

$63'-11\frac{1}{2}$ & $59'-9\frac{1}{2}$ END SPANS 81'-3 INTERIOR SPAN

GENERAL NOTES

STA. 593+15.00 (US 34) OCTOBER, 2013

MONROE COUNTY

IOWA DEPARTMENT OF TRANSPORTATION - HIGHWAY DIVISION

DESIGN SHEET NO. 2 OF 8 FILE NO. 30708 DESIGN NO. 213

BENCH MARK NO. 28 (DESIGN NUMBER 562) - STA 593+85, 110'± LT., SQUARE ON NE ABUTMENT WING WALL - ELEV.=804.55

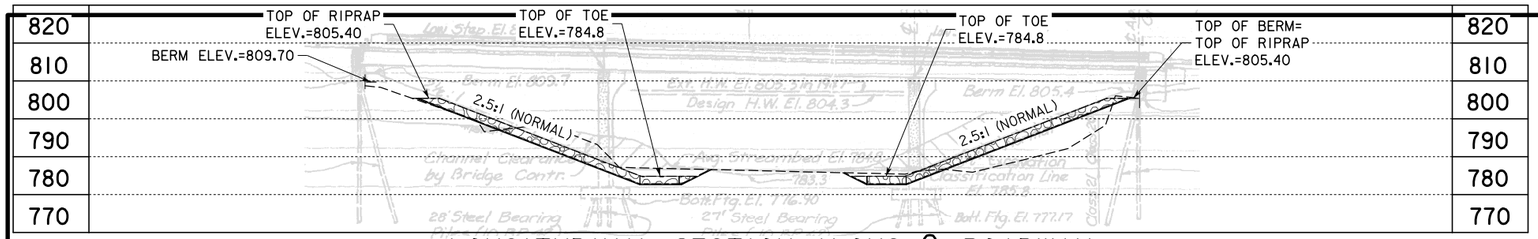

LONGITUDINAL SECTION ALONG ℄ ROADWAY

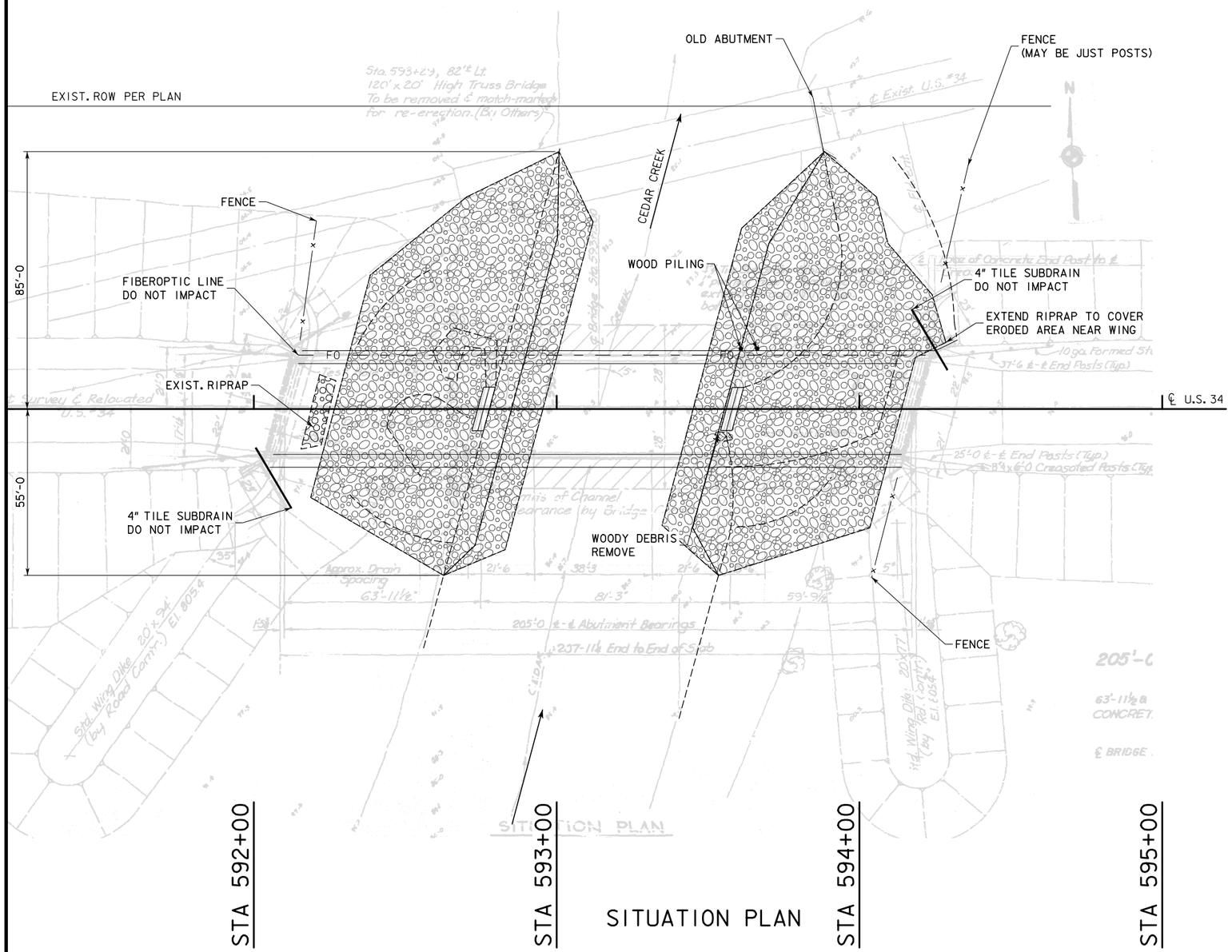

SITUATION PLAN

GENERAL NOTES:

THIS DESIGN IS FOR STREAMBANK REPAIRS TO THE EXISTING 205'-0 X 30' PRETENSIONED PRESTRESSED CONCRETE BEAM (PPCB) BRIDGE ON U.S. 34 OVER CEDAR CREEK, 4.4 MILES WEST OF IA 5, MONROE COUNTY. COPIES OF THE ORIGINAL DESIGN PLANS WILL BE MADE AVAILABLE TO THE CONTRACTOR. CONTACT THE OFFICE OF CONTRACTS - HIGHWAY DIVISION -IOWA D.O.T. - AMES.

THE REPAIR SHALL CONSIST OF THE FOLLOWING WORK.
REGRADE BOTH BERMS FROM ELEVATION 805.40 TO 782.80. THE BERM SHOULD BE GRADED AT 2.5:1 SLOPES FROM THE UPSTREAM ENDS OF THE PROJECT, THROUGH THE BRIDGE, TO ABOUT 35-FT. DOWNSTREAM OF THE BRIDGE BEFORE SLOPING TO TIE TO NATURAL GROUND. THE EAST BERM RIPRAP SHOULD TIE IN TO THE EXISTING OLD ABUTMENT.
EXCAVATE TO PROVIDE FOR AN ENTRENCHED TOE THAT IS 10-FT. WIDE ALONG BOTH BERMS.
SUITABLE EXCAVATED MATERIAL MAY BE USED AS BACKFILL MATERIAL. NO DEDUCTION HAS BEEN MADE TO THE ITEM FOR 'GRANULAR BACKFILL' FOR RE-USE OF MATERIAL.
THERE IS AN ERODED AREA ALONG THE NORTHEAST WING. EXCAVATION/GRADING AT THE WING SHOULD BE ONLY ENOUGH TO PROPERLY PLACE ENGINEERING FABRIC. THE PLANS SHOW A 4-INCH TILE BRIDGE SUBDRAIN THROUGH THIS WING. (THIS TILE WAS NOT SEEN DURING THE SITE VISIT.) THE CONTRACTOR IS TO TAKE CARE NOT TO DAMAGE THIS TILE.
THE EXPOSED OLD PILING IN THE CHANNEL SHOULD BE CUT FLUSH WITH THE CHANNEL BOTTOM.
EXCAVATION, REMOVAL OF OLD PILING AND ANY VEGETATION IS TO BE PAID FOR UNDER THE ITEM FOR 'EXCAVATION, CLASS 13, CHANNEL'.

PLACE CLASS E RIPRAP BLANKET 2 FT THICK UNDERLAIN WITH ENGINEERING FABRIC ON ALL GRADED AREAS OF THE BERMS AND BANKS, INCLUDING THE TOES AND THE ERODED AREA AT THE NORTHEAST WING.

THERE IS A FIBEROPTIC LINE ON THE UNDERSIDE OF THE DECK ALONG THE DOWNSTREAM (NORTH) SIDE OF THE BRIDGE. THIS SHOULD NOT BE IMPACTED BY THIS PROJECT. NO OTHER UTILITIES WERE NOTED WITHIN THE PROJECT AREA.

REMOVAL OF SCHEDULED ITEMS SHALL BE IN ACCORDANCE WITH SECTION 2401 OF THE SPECIFICATIONS. ANY DAMAGE TO MATERIAL NOT TO BE REMOVED SHALL BE THE RESPONSIBILITY OF THE CONTRACTOR AND REPAIRED AT NO EXTRA COST TO THE STATE.

DIMENSIONS AND ELEVATIONS SHOWN ON THESE PLANS ARE BASED ON DESIGN PLANS (DESIGN NUMBER 562). FEATURES FROM DESIGN NUMBER 562 ARE DRAWN VERY LIGHTLY ON THIS SHEET AND ARE FOR INFORMATION ONLY.
LOCATIONS OF FEATURES SHOWN ARE APPROXIMATE. FIELD VERIFICATION IS RECOMMENDED.

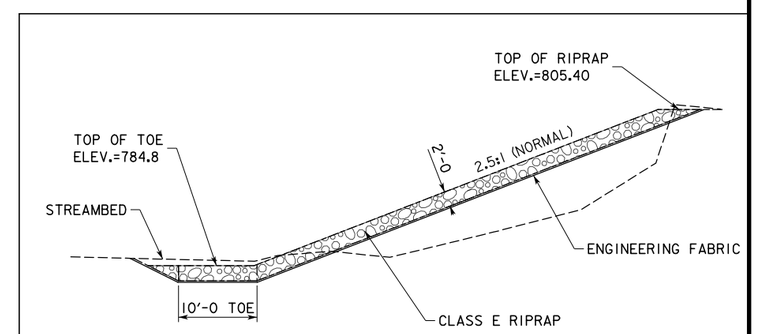

SCHEMATIC OF RIPRAP

LOCATION

U.S. 34 OVER CEDAR CREEK
T-72N R-18W
SECTION 26
GULLFORD TOWNSHIP
MONROE COUNTY
BRIDGE MAINT. NO. 6863.4S034
LATITUDE 41.010839° N
LONGITUDE -92.891394° W

HYDRAULIC DATA

DRAINAGE AREA= 102 MI^2
MAIN CHANNEL SLOPE= 7.10 FT./MI.

Q_{200} = 17,700 CFS
Q_{50} = 11,900 CFS
Q_{100} = 13,900 CFS
Q_{500} = 19,100 CFS

DESIGN FOR REPAIRS TO A 15° L.A. SKEW

205'-0 x 30'-0 PRESTRESSED PRETENSIONED CONCRETE BEAM BRIDGE

63'-11½ & 59'-9½ END SPANS 81'-3 INTERIOR SPAN

SITUATION PLAN - STREAMBANK REPAIR

STA. 593+15.00 (US 34) OCTOBER, 2013

MONROE COUNTY

IOWA DEPARTMENT OF TRANSPORTATION - HIGHWAY DIVISION

DESIGN SHEET NO. 3 OF 8 FILE NO. 30708 DESIGN NO. 213

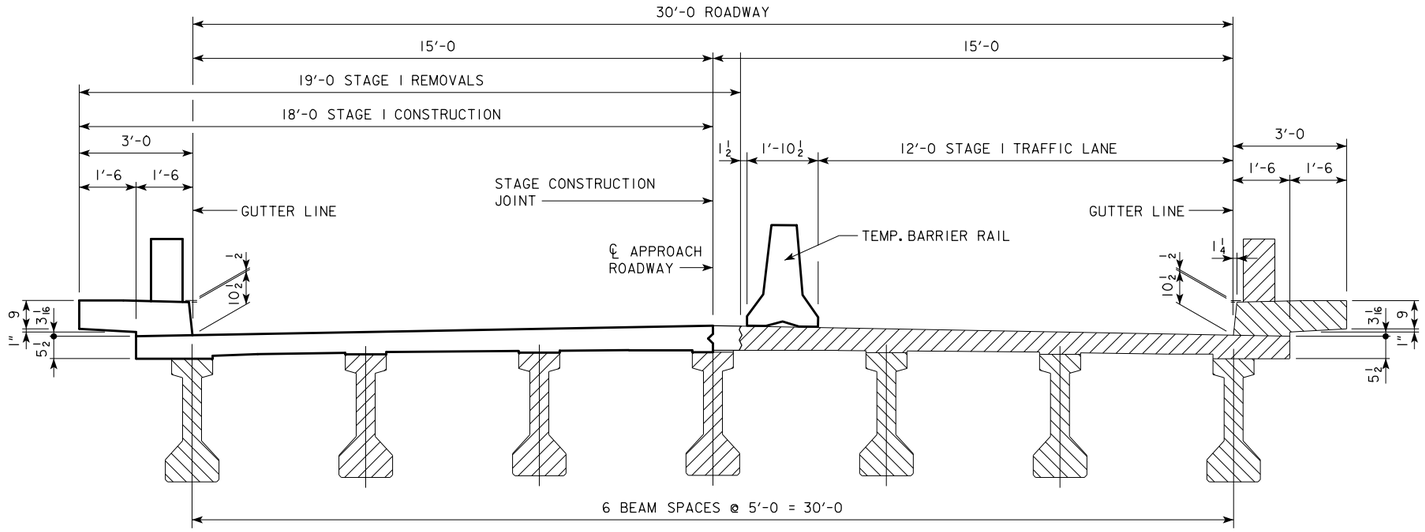

TYPICAL SECTION OF STAGE 1 CONSTRUCTION

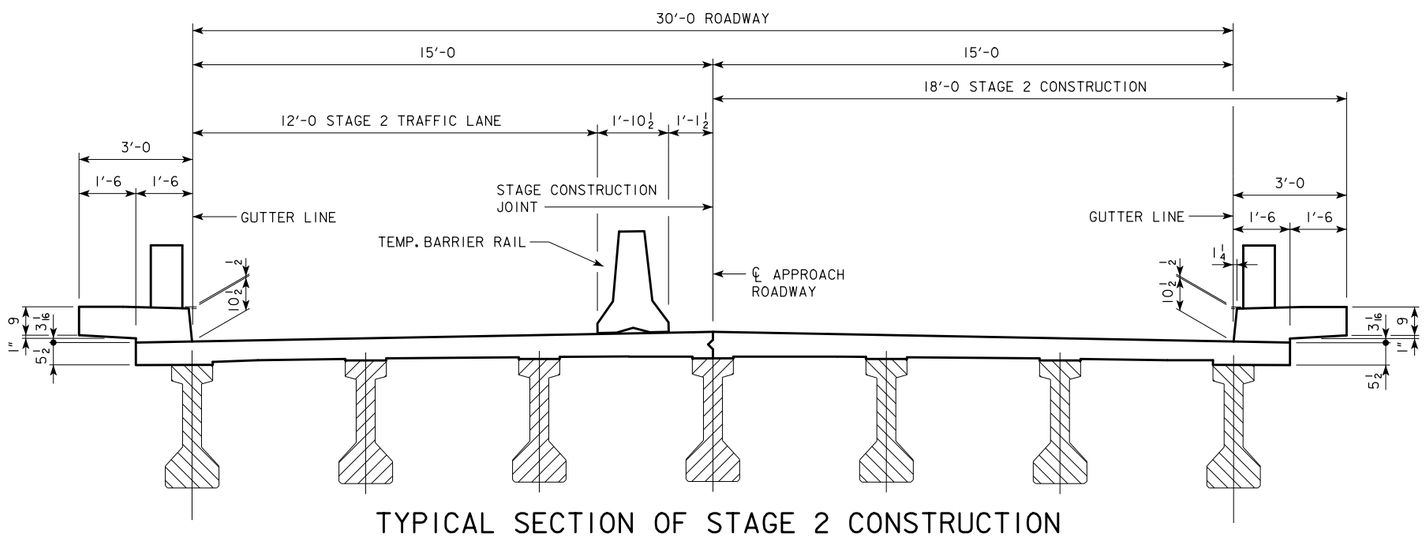

TYPICAL SECTION OF STAGE 2 CONSTRUCTION

DESIGN FOR REPAIRS TO A 15° L.A. SKEW

205'-0 x 30'-0 PRESTRESSED PRETENSIONED CONCRETE BEAM BRIDGE

63'-11½ & 59'-9½ END SPANS 81'-3 INTERIOR SPAN

STAGE CONSTRUCTION DETAILS

STA. 593+15.00 (US 34) OCTOBER, 2013

MONROE COUNTY

IOWA DEPARTMENT OF TRANSPORTATION - HIGHWAY DIVISION

DESIGN SHEET NO. 4 OF 8 FILE NO. 30708 DESIGN NO. 213

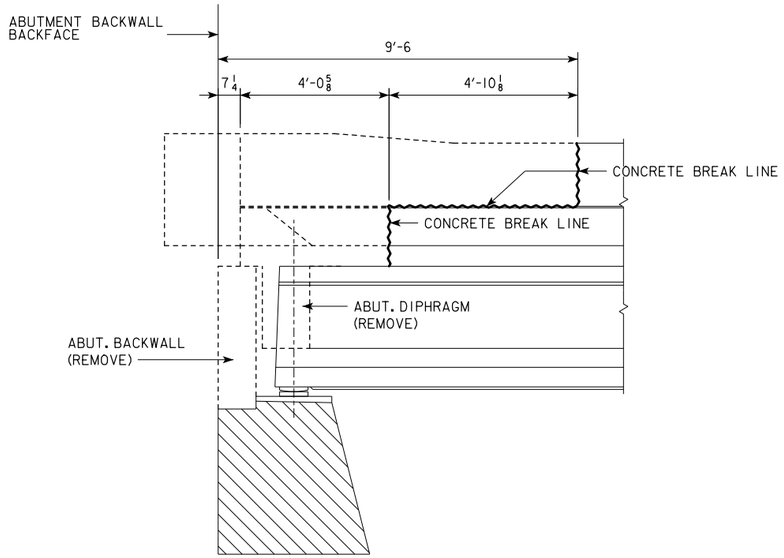

SECTION THRU ABUTMENT

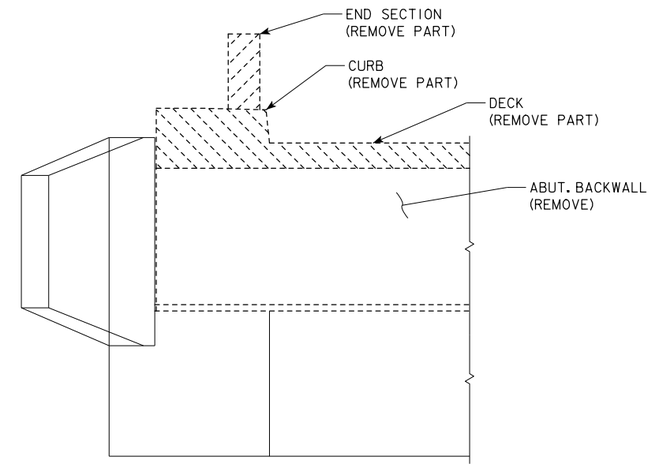

ABUTMENT REAR ELEVATION

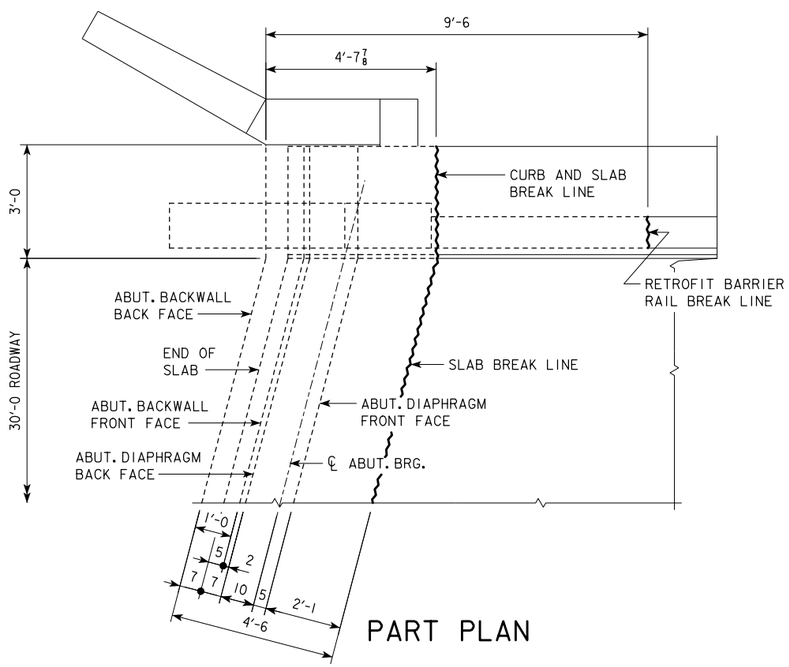

PART PLAN

DESIGN FOR REPAIRS TO A 15° L.A. SKEW

205'-0 x 30'-0 PRESTRESSED PRETENSIONED CONCRETE BEAM BRIDGE

63'-11 1/2 & 59'-9 1/2 END SPANS 81'-3 INTERIOR SPAN

REMOVAL DETAILS

STA. 593+15.00 (US 34) OCTOBER, 2013

MONROE COUNTY

IOWA DEPARTMENT OF TRANSPORTATION - HIGHWAY DIVISION

DESIGN SHEET NO. 5 OF 8 FILE NO. 30708 DESIGN NO. 213

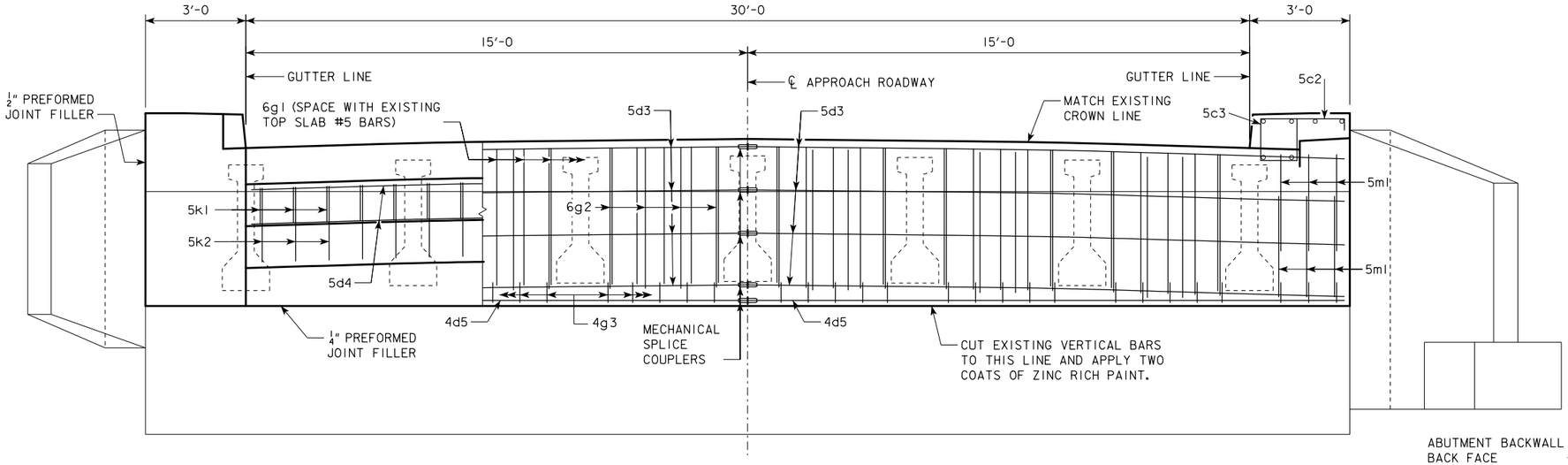

ABUTMENT REAR ELEVATION

ABUTMENT NOTES:

EXISTING SLAB AND CURB LONGITUDINAL BARS AND BEAM COIL TIES EXPOSED BY REMOVAL OPERATIONS SHALL BE CUT, CLEANED AND INCORPORATED INTO THE NEW WORK. BARS THAT ARE DAMAGED OR RENDERED UNSERVICABLE BY REMOVAL OPERATIONS SHALL BE REPLACED BY THE CONTRACTOR AT NO EXTRA COST TO THE STATE.

EXISTING ABUTMENT BACKWALL VERTICAL REINFORCING BARS EXPOSED BY CONCRETE REMOVAL OPERATIONS SHALL BE CUT, CLEANED AND GIVEN TWO COATS OF ZINC RICH PAINT.

MINIMUM CLEAR DISTANCE FROM FACE OF CONCRETE TO NEAR REINFORCING BAR IS TO BE 2" UNLESS OTHERWISE NOTED OR SHOWN.

IF NECESSARY TO PREVENT DAMAGE TO THE END OF THE BRIDGE DECK OR BACKWALL FROM CONSTRUCTION EQUIPMENT, AN APPROPRIATE METHOD OF PROTECTION APPROVED BY THE ENGINEER SHALL BE PROVIDED BY THE BRIDGE CONTRACTOR AT NO EXTRA COST TO THE STATE.

REFER TO DESIGN SHEET 8 FOR BARRIER RAIL DETAILS.

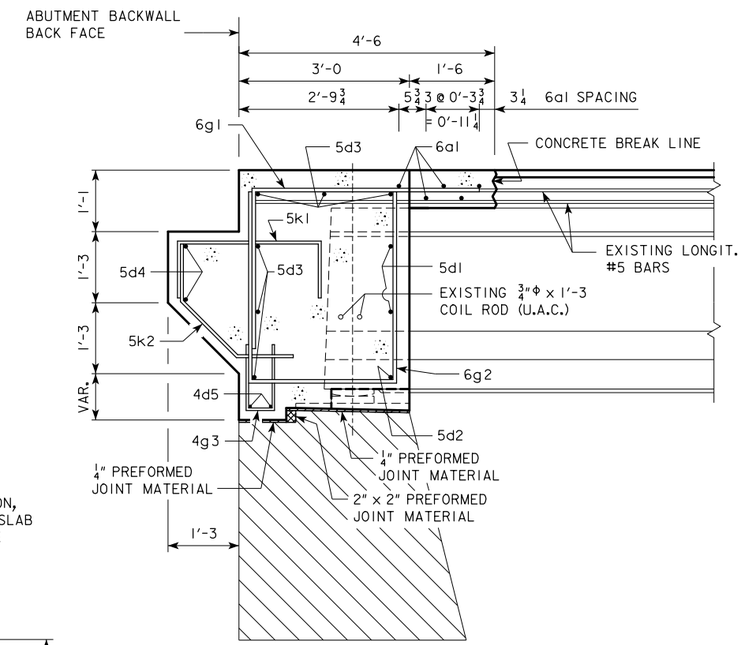

SECTION A-A

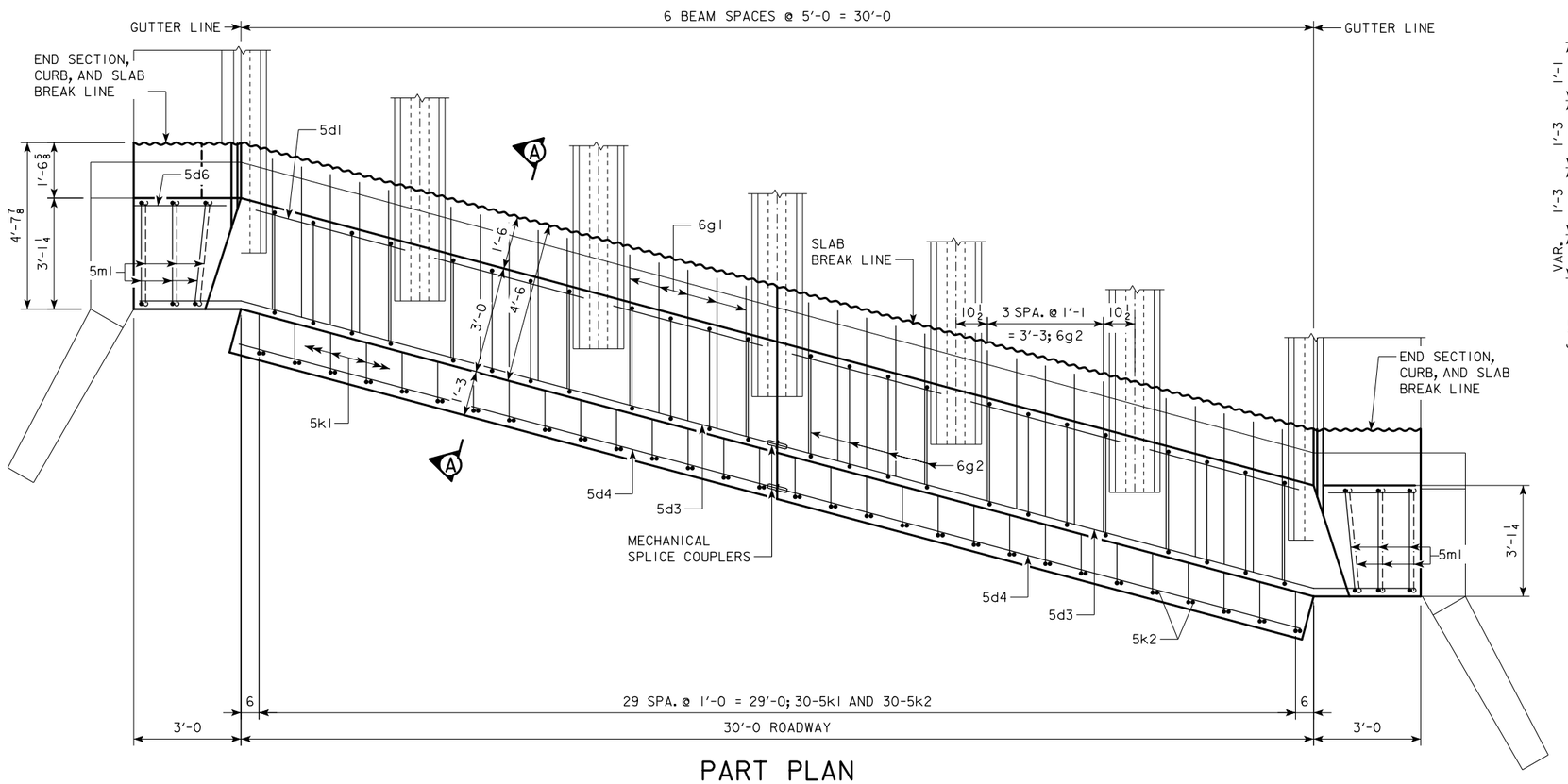

PART PLAN

SHOWING BACKWALL REINFORCING

DESIGN FOR REPAIRS TO A 15° L.A. SKEW

205'-0 x 30'-0 PRESTRESSED PRETENSIONED CONCRETE BEAM BRIDGE

63'-11½ & 59'-9½ END SPANS 81'-3 INTERIOR SPAN

ABUTMENT DETAILS

STA. 593+15.00 (US 34) OCTOBER, 2013

MONROE COUNTY

IOWA DEPARTMENT OF TRANSPORTATION - HIGHWAY DIVISION

DESIGN SHEET NO. 6 OF 8 FILE NO. 30708 DESIGN NO. 213

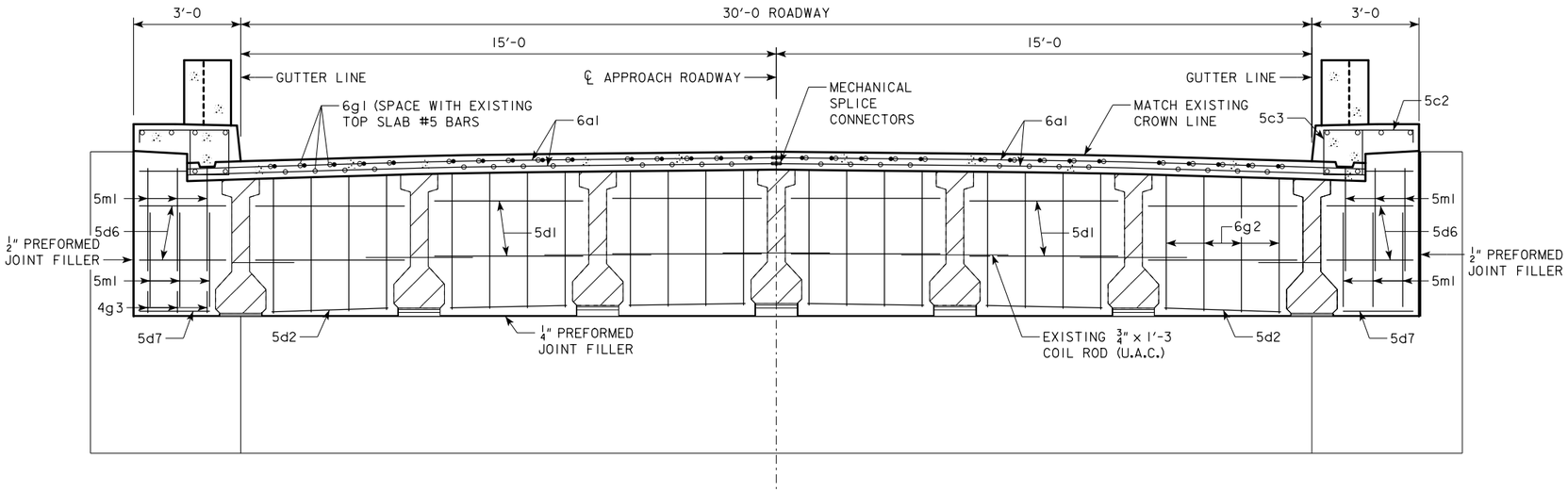

FRONT ABUTMENT ELEVATION

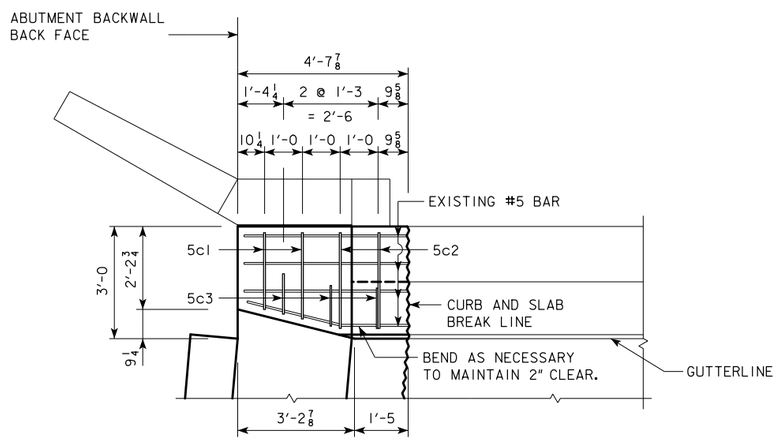

PART PLAN

SHOWING CURB REINFORCING

REINFORCING BAR LIST - ONE ABUTMENT

BAR	LOCATION	SHAPE	NO.	LENGTH	WEIGHT
6a1	SLAB, TRANSV., TOP & BOTT.	—	10	16'-11	254
5c1	CURB	⌐	4	VARIES	10
5c2	CURB	⌐	4	2'-10	12
5c3	CURB	⊏	6	4'-3	27
5d1	ABUT. DIAPHR., TRANSV., F.F.	—	12	4'-4	54
5d2	ABUT. DIAPHR., TRANSV., BOTT.	—	6	3'-5	21
5d3	ABUT. DIAPHR., TRANSV., TOP & B.F.	⟋	12	18'-4	229
5d4	PAVING SUPPORT, TRANSV.	—	4	15'-4	64
4d5	ABUT. DIAPHR., TRANSV., BOTT.	⟋	4	18'-4	49
5d6	ABUT. DIAPHR., ENDS	—	4	2'-8	11
5d7	ABUT. DIAPHR., ENDS, BOTT.	—	2	2'-4	5
6g1	ABUT. DIAPHR. & SLAB, TOP	⌐	30	7'-7	342
6g2	ABUT. DIAPHR., F.F.	⊔	24	9'-10	354
4g3	ABUT. DIAPHR., BOTT.	⊔	36	2'-6	60
5k1	PAVING SUPPORT	⌐	30	4'-4	136
5k2	PAVING SUPPORT	⌐	30	3'-5	107
5m1	ABUT. DIAPHR., ENDS	⊓	12	9'-6	119
				TOTAL (LBS.)	1854

BENT BAR DETAILS

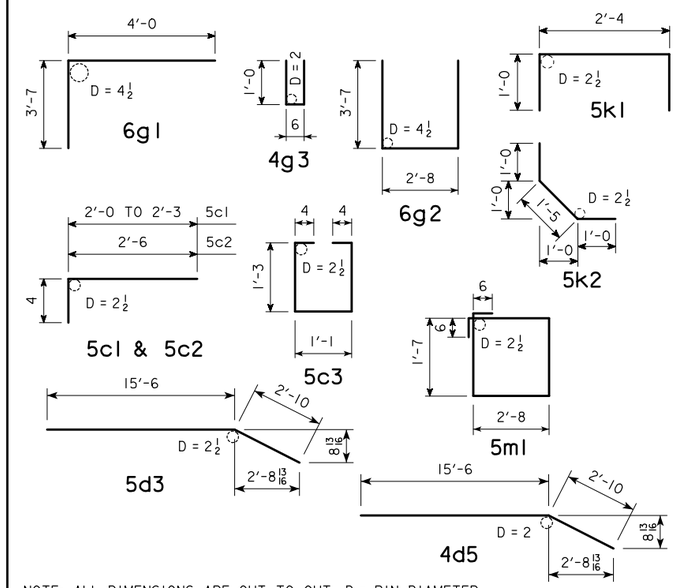

NOTE: ALL DIMENSIONS ARE OUT TO OUT. D = PIN DIAMETER.

CONCRETE PLACEMENT SUMMARY

CONCRETE		TOTAL
SLAB AND DIAPHRAGM	2 ABUTS. @ 18.6	37.2
CURB ENDS	4 @ 0.4	1.6
	TOTAL (CU. YDS.)	38.8

DESIGN FOR REPAIRS TO A 15° L.A. SKEW

205'-0 x 30'-0 PRESTRESSED PRETENSIONED CONCRETE BEAM BRIDGE

63'-11 1/2 & 59'-9 1/2 END SPANS — 81'-3 INTERIOR SPAN

ABUTMENT DETAILS

STA. 593+15.00 (US 34) — OCTOBER, 2013

MONROE COUNTY

IOWA DEPARTMENT OF TRANSPORTATION - HIGHWAY DIVISION

DESIGN SHEET NO. 7 OF 8 FILE NO. 30708 DESIGN NO. 213

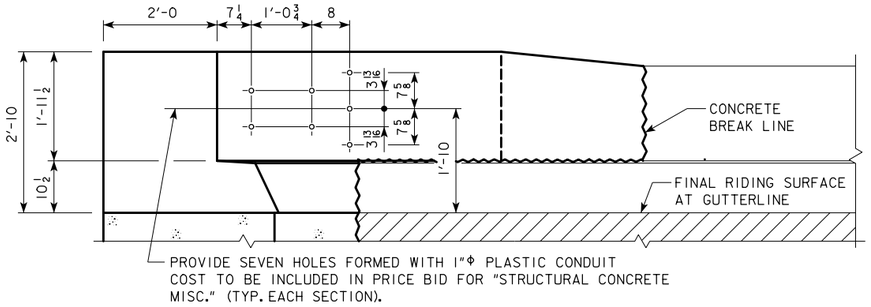

ELEVATION OF END SECTION

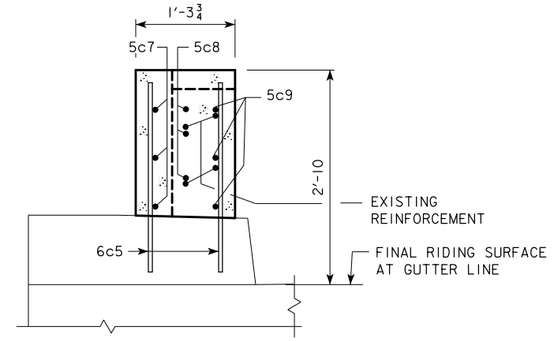

SECTION C-C

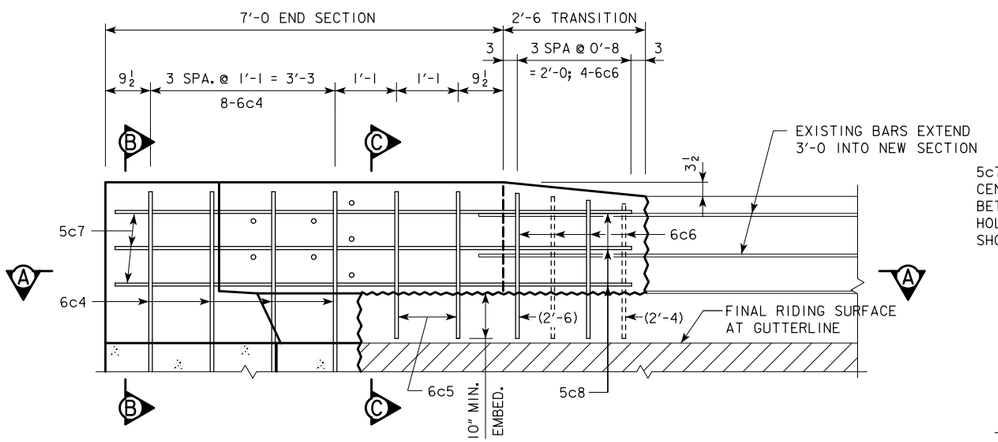

ELEVATION OF END SECTION

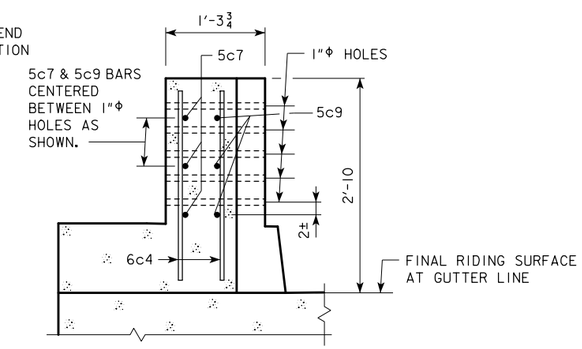

SECTION B-B

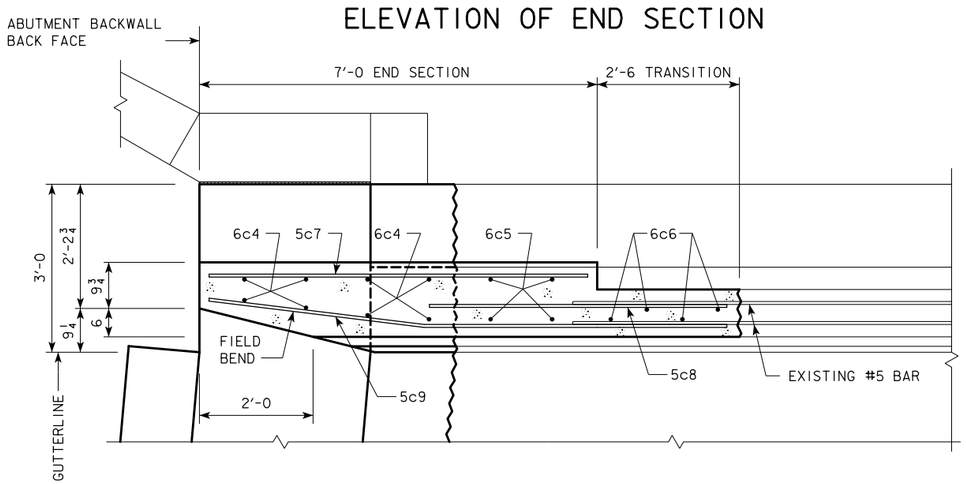

SECTION A-A

REINFORCING BAR LIST - FOUR END SECTIONS

BAR	LOCATION	SHAPE	NO.	LENGTH	WEIGHT
6c4	END SECTION, VERT.	—	32	3'-3	156
6c5	END SECTION, VERT.	—	16	2'-7	62
6c6	END SECTION, VERT.	—	16	VARIES	58
5c7	END SECTION, HORIZ.	—	12	6'-8	83
5c8	END SECTION, HORIZ.	—	12	6'-0	75
5c9	END SECTION, HORIZ.	—	12	9'-2	115
				TOTAL (LBS.)	549

CONCRETE PLACEMENT SUMMARY

CONCRETE		TOTAL
RAIL END SECTION	4 @ 0.5	2.0
	TOTAL (CU. YDS.)	2.0

THE 6c5 AND 6c6 BARS SHALL BE SET AS DOWELS IN DRILLED HOLES. HOLES ARE TO BE 10" DEEP. THE DOWELS SHALL BE INSTALLED IN ACCORDANCE WITH THE GROUT MANUFACTURER'S RECOMMENDATIONS. EITHER OF THE FOLLOWING SYSTEMS MAY BE USED AS A BONDING AGENT FOR VERTICAL DOWELS, BUT ONLY SYSTEM "A" MAY BE USED FOR HORIZONTAL DOWELS:

A. POLYMER GROUT SYSTEM IN ACCORDANCE WITH ARTICLE 2301.03, E OF THE STANDARD SPECIFICATIONS.
B. HYDRAULIC CEMENT GROUT SYSTEMS. DRILLED HOLES ARE TO BE 2 1/2 TIMES THE DOWEL DIAMETER AND ARE TO BE BLOWN CLEAN WITH COMPRESSED AIR IMMEDIATELY PRIOR TO PLACING GROUT. THE HYDRAULIC CEMENT GROUT SHALL BE ONE OF THOSE APPROVED IN MATERIALS I.M. 491.13 AND SHALL BE USED IN ACCORDANCE WITH THE MANUFACTURER'S RECOMMENDATIONS.

DESIGN FOR REPAIRS TO A 15° L.A. SKEW

205'-0 x 30'-0 PRESTRESSED PRETENSIONED CONCRETE BEAM BRIDGE

63'-11 1/2 & 59'-9 1/2 END SPANS — 81'-3 INTERIOR SPAN

BARRIER RAIL DETAILS

STA. 593+15.00 (US 34) — OCTOBER, 2013

MONROE COUNTY

IOWA DEPARTMENT OF TRANSPORTATION - HIGHWAY DIVISION

DESIGN SHEET NO. 8 OF 8 FILE NO. 30708 DESIGN NO. 213

INDEX OF SHEETS

Value Engineering Saves. Refer to Article 1105.15 of the Specifications.

NO MILEAGE SUMMARY

IOWA ONE CALL
1-800-292-8989
www.iowaonecall.com
811 Know what's below. Call before you dig.

Design No. 113 & 213
File No. 30708

INDEX OF SEALS

SHEET NO.	NAME	TYPE
A.1	Paul W. Flattery	Primary Signature Block

ROADWAY DESIGN

LICENSED PROFESSIONAL ENGINEER Paul W. Flattery 15282 IOWA

I hereby certify that this engineering document was prepared by me or under my direct personal supervision and that I am a duly licensed Professional Engineer under the laws of the State of Iowa.

Signature 08-22-2013 Date

Paul W. Flattery
Printed or Typed Name

My license renewal date is December 31, 2013

Pages or sheets covered by this seal: A.1, B.1-B.3, C.1-C.5, & J.1.

Shoulder Strengthening

HMA Shoulder

Shoulder Jointing:
Longitudinal joint: B

STATION TO STATION		2_P_HMA_ Modified (P) Feet
580+42	582+42	1
584+32	586+32	1
590+12.5	592+12.5	1
594+17.5	596+17.5	1

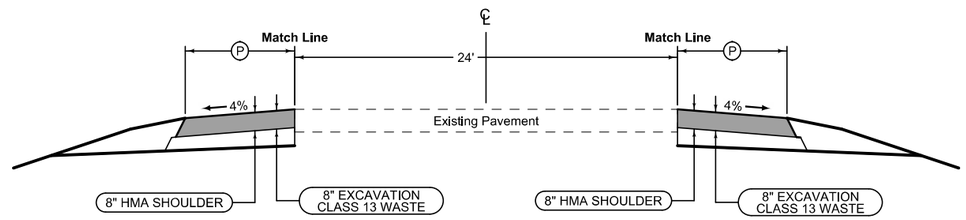

HMA Shoulder

Shoulder Jointing:
Longitudinal joint: B

STATION TO STATION		2_P_HMA_ Modified (P) Feet
580+42	582+42	1
584+32	586+32	1
590+12.5	592+12.5	1
594+17.5	596+17.5	1

1 See Typical 7156M & Tab.112-9M for shoulder quantities.

U.S.30

Design No. 113 & 213
File No. 30708

8212
10-16-12

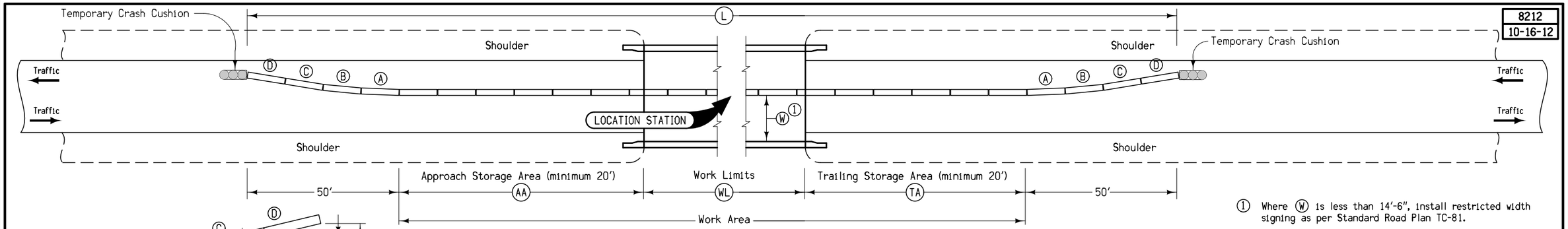

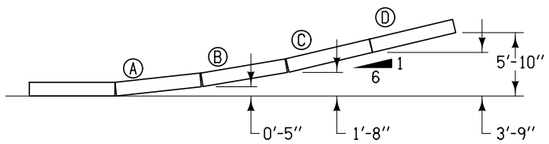

BARRIER OFFSETS FOR FLARE SECTIONS

1 Where W is less than 14′-6″, install restricted width signing as per Standard Road Plan TC-81.

Station	Side	AA	WL	TA	L	Anchored	W 1	Remarks
		Feet	Feet	Feet	Feet	X	Ft-Inches	
583+37	Rt.	50	190	50	390		12′-0″	Stage 1. (Design 113)
583+37	Lt.	50	190	50	390		12′-0″	Stage 2. (Design 113)
593+15	Rt.	50	345	50	545		12′-0″	Stage 1. (Design 213)
593+15	Lt.	50	345	50	545		12′-0″	Stage 2. (Design 213)
Totals:					1,870.0			

TEMPORARY CONCRETE BARRIER LAYOUT for Two-Way Traffic

Design No. 113 & 213
File No. 30708

ENGLISH	IOWA DOT	DESIGN TEAM FLATTERY/LUONG	MONROE COUNTY	PROJECT NUMBER MB-034-5(500)163--77-68	SHEET NUMBER B.2

7156M
Modified

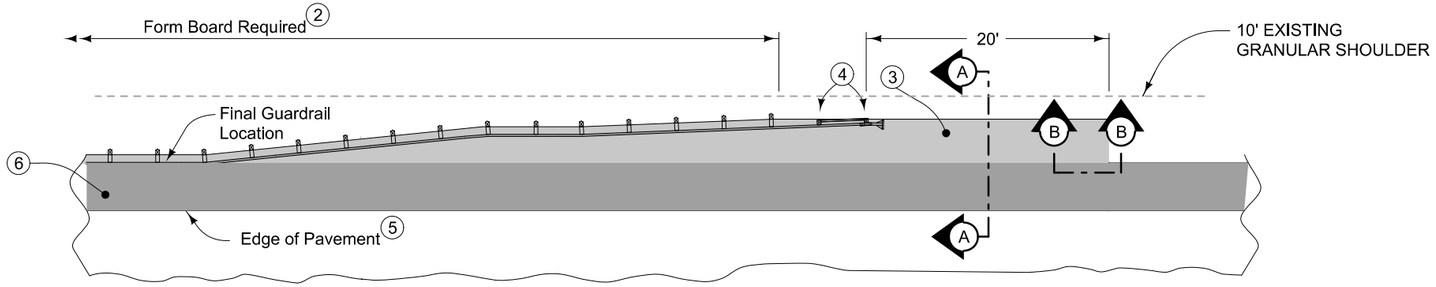

8" HMA Paved Shoulder at guardrail. 7" PCC may be substituted with the following jointing layout:

Match mainline pavement joint spacing. When mainline pavement is 8" or greater in thickness, place additional transverse 'C' joints in shoulder at mid-panel of the mainline pavement. Place longitudinal 'C' joint at W/2 from edge of mainline pavement when W is greater than 10' wide. Terminate longitudinal joint at transverse joint less than 10' in length.

Compaction of HMA is required to face of guardrail post. Hand compaction will be allowed under guardrail. Removal & reinstallation of guardrail will be allowed with no additional payment.

Refer to Shoulder tabulation (112-9) for quantities.

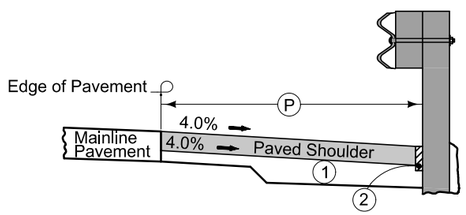

Typical Section with Form Board

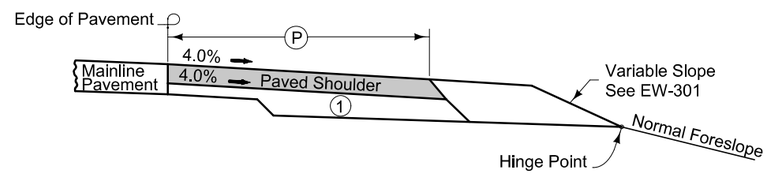

Section A-A

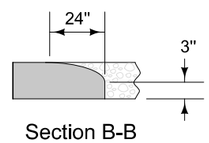

Section B-B
Roll down at granular shoulder or earth.

1. 6" subgrade treatment.
2. When guardrail posts are installed prior to construction of paved shoulder, nail 1" x 6" untreated form boards along the face of guardrail posts for the length shown. This board is to prevent shoulder material from contacting the sides of the posts and altering the function of the guardrail. Form board not required for final 2 posts.
3. Continue paved shoulder to existing paved shoulder or 20' beyond the end of guardrail.
4. Shoulder may be notched for final 2 posts or post sleeves may be installed through pavement.
5. 'KT-1' joint for PCC shoulder.
   'B' joint for HMA shoulder.
6. Shoulder Strengthening.

PAVED SHOULDER AT GUARDRAIL

Design No. 113 & 213
File No. 30708

100-1D
10-18-05

PROJECT DESCRIPTION

The project involves repair of the US.34 190' x 30' Continuous Steel Beam structure Bridge over BNSF RR 4.5 miles west of Jct. IA 5.
And 205' x 30' Continuous Steel Beam structure Bridge over Cedar Creek 4.5 miles west of Jct. IA 5.

100-0A
10-28-97

ESTIMATED ROADWAY QUANTITIES
(1 DIVISION PROJECT)

Item No.	Item Code	Item	Unit	Total	As Built Qty.
1	2102-2713090	EXCAVATION, CLASS 13, WASTE	CY	162.0	
2	2123-7450000	SHOULDER CONSTRUCTION, EARTH	STA	22.60	
3	2301-0690200	BRIDGE APPROACH, RK-20	SY	477.0	
4	2304-0100000	DETOUR PAVEMENT	SY	716.8	
5	2505-4008120	REMOVAL OF STEEL BEAM GUARDRAIL	LF	1,000.0	
6	2505-4008300	STEEL BEAM GUARDRAIL	LF	400.0	
7	2505-4008400	STEEL BEAM GUARDRAIL BARRIER TRANSITION SECTION	EACH	8	
8	2505-4021010	STEEL BEAM GUARDRAIL END ANCHOR, BOLTED	EACH	8	
9	2505-4021700	STEEL BEAM GUARDRAIL END TERMINAL	EACH	8	
10	2510-6745850	REMOVAL OF PAVEMENT	SY	400.0	
11	2527-9263109	PAINTED PAVEMENT MARKING, WATERBORNE OR SOLVENT-BASED	STA	28.30	
12	2527-9263131	WET RETROREFLECTIVE REMOVABLE TAPE MARKINGS	STA	18.40	
13	2527-9263180	PAVEMENT MARKINGS REMOVED	STA	31.40	
14	2528-8400048	TEMPORARY BARRIER RAIL, CONCRETE	LF	1,870.0	
15	2528-8400256	TEMPORARY TRAFFIC SIGNALS	EACH	4	
16	2528-8445110	TRAFFIC CONTROL	LS	1.00	
17	2528-8445113	FLAGGERS	EACH	See Proposal	
18	2551-0000110	TEMP CRASH CUSHION	EACH	8	

105-4
10-18-11

STANDARD ROAD PLANS

The following Standard Road Plans apply to construction work on this project.

Number	Date	Title
BA-201	10-19-10	Steel Beam Guardrail Barrier Transition Section
BA-202	10-18-11	Steel Beam Guardrail Bolted End Anchor
BA-205	10-18-11	Steel Beam Guardrail End Terminal
BA-250	10-18-11	Steel Beam Guardrail Installation at Concrete Barrier or Bridge End Post
BA-401	04-16-13	Temporary Barrier Rail (Precast Concrete)
BA-500	04-20-10	Temporary Crash Cushions Sand Barrel
PM-110	04-16-13	Line Types
RK-20	04-16-13	Double Reinforced 12" Approach
SI-173	04-20-10	Object Markers
TC-1	04-16-13	Work Not Affecting Traffic (Two-Lane or Multi-Lane)
TC-202	10-15-13	Shoulder Closure (One Lane)
TC-213	04-17-12	Lane Closure with Flaggers
TC-217	04-16-13	Lane Closure with Signals and TBR

100-4A
10-29-02

ESTIMATE REFERENCE INFORMATION

Item No.	Item Code	Description
1	2102-2713090	EXCAVATION, CLASS 13, WASTE
2	2123-7450000	SHOULDER CONSTRUCTION, EARTH
		Refer to Typical 7156M and Tab.112-9M for information.
-	-	-
3	2301-0690200	BRIDGE APPROACH, RK-20
		Refer to Tab.112-6 for information and location.
-	-	-
4	2304-0100000	DETOUR PAVEMENT
		Refer to Typical 7156M and Tab.112-9M for information.
-	-	-
5	2505-4008120	REMOVAL OF STEEL BEAM GUARDRAIL
		Refer to Tab.110-7A for information.
-	-	-
6	2505-4008300	STEEL BEAM GUARDRAIL
7	2505-4008400	STEEL BEAM GUARDRAIL BARRIER TRANSITION SECTION
8	2505-4021010	STEEL BEAM GUARDRAIL END ANCHOR, BOLTED
9	2505-4021700	STEEL BEAM GUARDRAIL END TERMINAL
		Refer to Tab.108-8A for information.
-	-	-
10	2510-6745850	REMOVAL OF PAVEMENT
		Refer to Tab.110-1 for information.
-	-	-
11	2527-9263109	PAINTED PAVEMENT MARKING, WATERBORNE OR SOLVENT-BASED
12	2527-9263131	WET RETROREFLECTIVE REMOVABLE TAPE MARKINGS
13	2527-9263180	PAVEMENT MARKINGS REMOVED
		Refer to Tab.108-22 for information.
-	-	-
14	2528-8400048	TEMPORARY BARRIER RAIL, CONCRETE
		Refer to Tab.108-33 and Typical 8212 for information. Only 935' TBR for initial set and 935' TBR for re-set.
-	-	-
15	2528-8400256	TEMPORARY TRAFFIC SIGNALS
		Refer to Tab.108-28 for information.
-	-	-
16	2528-8445110	TRAFFIC CONTROL
		Refer to Tab.108-23A for information.
-	-	-
17	2528-8445113	FLAGGERS
		- -
-	-	-
18	2551-0000110	TEMP CRASH CUSHION
		Refer to Tab.108-30 for information.
-	-	-

111-25
10-18-11

INDEX OF TABULATIONS

Design No. 113
File No. 30708

Design No. 213
File No. 30708

232-3C
Modified

EROSION CONTROL (NATIVE GRASS SEEDING)

Following the completion of work in a disturbed area, place seed and mulch on the disturbed area lying 8 feet or more beyond the shoulder as follows:

SEED MIX:

Big bluestem (Andropogon geradii)	6 lbs. PLS/Acre (7.0 kg/ha)
Indiangrass (Sorghastrum nutans)	6 lbs. PLS/Acre (7.0 kg/ha)
Little bluestem (Schizachyrium scoparium)	6 lbs. PLS/Acre (7.0 kg/ha)
Partridge Pea (Chamaecrista fasciculata)	4 lbs. PLS/Acre (4.5 kg/ha)
Sideoats grama (Bouteloua curtipendula)	4 lbs. PLS/Acre (4.5 kg/ha)
Canada wildrye (Elymus canadensis)	2 lbs. PLS/Acre (2.2 kg/ha)
Switchgrass (Panicum virgatum)	1 lbs. PLS/Acre (1.1 kg/ha)
Oats (Avena sativa)	32 lbs./Acre (36.0 kg/ha)

Big bluestem, Indiangrass, Canada wildrye and Little bluestem shall be debearded or equal to facilitate the application of seed.

Use mulch meeting the requirements of Sections 2601.03,E,2,a and 4169.07,A of the Standard Specifications.

Preparing the seedbed and furnishing and applying seed and mulch is incidental to mobilization and will not be paid for separately.

281-1
10-15-13

SECTION 404 PERMIT AND CONDITIONS

Construct this project according to the requirements of U.S. Army Corps of Engineers should read Nationwide, Permit No. should read 3. A copy of this permit is available from the Iowa DOT website (http://envpermits.iowadot.gov/CMEPortalENV/Home.aspx). The U.S. Army Corps of Engineers reserves the right to visit the site without prior notice.

262-6
10-18-05

UTILITIES (NOT A POINT 25 PROJECT)

This is NOT a POINT 25 project and is not subject to the provisions of IAC 761-115.25.

110-1
04-16-13

REMOVAL OF PAVEMENT

Refer to Tabulation 102-5

* Not a Bid Item

Begin Station	End Station	Side	Pavement Type	Area (SY)	Saw Cut* (LF)	Remarks
581+72.00	582+22.00	Both	PCC	133.3	24.0	
582+22.00	582+42.00	Both	PCC	66.7		
584+32.00	584+52.00	Both	PCC	66.7		
584+52.00	585+02.00	Both	PCC	133.3	24.0	
		Totals:		400.0		

108-28
08-01-08

TEMPORARY TRAFFIC SIGNALS

No.	Location Station	Type: One Lane Traffic	Type: Haul Road	Type: Intersection	Remarks
1	582+12.00	x			Design 113.
2	584+62.00	x			Design 113.
3	591+12.50	x			Design 213.
4	595+17.50	X			Design 213.

108-33
04-16-13

TEMPORARY BARRIER RAIL

Refer to BA-400 and BA-401

* Not a bid item. Anchorage requirements are based on TBR locations shown in the plans. TBR alignments that vary from what is shown in the plans may result in additional TBR sections requiring anchorage.

No.	Station to Station		Length (LF)	(Select One) Steel BA-400	(Select One) Concrete BA-401	Anchored* (Y/N)	Remarks
1	581+42.00	585+32.00	390.0		x	No	Stage 1. (Design 113)
2	581+42.00	585+32.00	390.0		x	No	Stage 2. (Design 113)
3	590+42.50	595+87.50	545.0		x	No	Stage 1. (Design 213)
4	590+42.50	595+87.50	545.0		x	No	Stage 2. (Design 213)
	Totals:		1870.0				

112-6
04-16-13

BRIDGE APPROACH SECTION

Refer to the RK-Series.

* Not a bid item

Location: Bridge Station	Location: End	Location: Skew Ahead Degrees LEFT	Location: Skew Ahead Degrees RIGHT	Approach Pavement: (T) Thickness (Inches)	Approach Pavement: Pay Length (FT)	Approach Pavement: Non-Reinf. Pavement Area (SY)	Approach Pavement: Single-Reinf. Pavement Area (SY)	Approach Pavement: Double-Reinf. Pavement Area (SY)	Fixed or Movable Abutment (F or M)	Subdrain: * Perforated Subdrain 4" (LF)	Subdrain: * Subdrain Outlet (STA)	Subdrain: Side	Subdrain: * Porous Backfill (CY)	Subdrain: Class 'A'* Crushed Stone Backfill (CY)	* Modified Subbase (TON)	* Polymer Grid (SY)	Remarks
593+15	East		15	12.0	70.9	80.0	53.3	105.2	F	--	--		--	--	259.040	271.9	
592+15	West		15	12.0	70.9	80.0	53.3	105.2	F	--	--		--	--	259.040	271.9	
Totals:						160.0	106.6	210.5							518.080	543.7	

102-5
10-16-12

EXISTING PAVEMENT

No.	Location: County	Location: Route	Location: Dir. of Travel	Location: Begin Milepost	Location: End Milepost	Year	Type	Project Number	Surface: Type	Surface: Depth (IN)	Base: Type	Base: Depth (IN)	Subbase: Type	Subbase: Depth (IN)	Removal: Type	Removal: Depth (IN)	Coarse Aggregate: Source	Coarse Aggregate: Type	Coarse Aggregate: Durability Class	Reinforcement: Type	Remarks
1	Monroe	34	Both	158.9	167.7	2003		NHSX-34-6(65)--3H-68	AAC	1.5	BAC	2					DURHAM MINE			C.LST.	
2	Monroe	34	Both	158.9	167.7	2003	W	NHSX-34-6(65)--3H-68	AAC	1.5	BAC		BAC	7			DURHAM MINE			C.LST.	
3	Monroe	34	Both	158.9	167.7	1983		EACF-34-6(28)--2K-68	AAC	1.5	TBB	1.5					LEMLEY			C.LST.	
4	Monroe	34	Both	158.9	167.7	1964		FN-FGN-1027	PCC	10							PLANO FIELD			C.LST.	

Design No. 113
File No. 30708

Design No. 213
File No. 30708

108-8A
10-19-10

STEEL BEAM GUARDRAIL AT CONCRETE BARRIER OR BRIDGE END POST

Refer to BA-200, BA-201, BA-202, BA-205, BA-250, SI-172, SI-173 and SI-211.

(1) See Standards for list of materials.

Location Station			Layout Lengths				Delineators and Object Markers					Bid Items (1)						
			VT1	VF	VT2	ET	Type	Delineator	Object Marker			End Anchor Bolted	Barrier Transition Section	Steel Beam Guardrail	End Terminal		Adapter	Remarks
								Type 1	Type 2	Type 3					Standard	Flared for Cable Connection		
						Terminal		White		OM-3L	OM-3R	BA-202	BA-201	BA-200	BA-205	BA-206	BA-210	
No.	Station	Offset	LF	LF	LF	LF		No.	No.	No.	No.	Type	No.	LF	No.	No.	No.	
1	582+42.00	--	53.125	--	--	50.0					1	B	1	25.0	1			Design 113.
2	582+42.00	--	115.625	--	--	50.0				1		B	1	87.5	1			Design 113.
3	584+32.00	--	53.125	--	--	50.0					1	B	1	25.0	1			Design 113.
4	584+32.00	--	115.625	--	--	50.0				1		B	1	87.5	1			Design 113.
5	592+12.50	--	53.125	--	--	50.0					1	A	1	25.0	1			Design 213.
6	592+12.50	--	40.625	50.00	--	50.0				1		A	1	62.5	1			Design 213.
7	594+17.50	--	53.125	--	--	50.0					1	A	1	25.0	1			Design 213.
8	594+17.50	--	40.625	50.00	--	50.0				1		A	1	62.5	1			Design 213.
	Totals:									4	4		8	400.0	8			

110-7A
04-17-12

REMOVAL OF STEEL BEAM GUARDRAIL

(1) Lane(s) to which the installation is adjacent.
(2) Includes length of End Terminals and End Anchors.

Location					Removal of Guardrail (2)
No.	Direction of Traffic (1)	Station to Station		Side	LF
1	EB	581+17.00	582+42.00	Rt.	125.0
2	WB	581+17.00	582+42.00	Lt.	125.0
3	EB	584+32.00	585+57.00	Rt.	125.0
4	WB	584+32.00	585+57.00	Lt.	125.0
5	EB	590+87.50	592+12.50	Rt.	125.0
6	WB	590+87.50	592+12.50	Lt.	125.0
7	EB	594+17.50	595+42.50	Rt.	125.0
8	WB	594+17.50	595+42.50	Lt.	125.0
			Totals:		1000.0

Design No. 113
File No. 30708

Design No. 213
File No. 30708

108-30
04-16-13

CRASH CUSHIONS

* Bid Item
(1) Lane(s) to which the installation is adjacent.
(2) Complete this section when using the Temporary Crash Cushion bid item and Earthwork is needed for Sand Barrel placement. Refer to BA-500

No.	Direction of Traffic (1)	Location Station	Side	Obstacle Width	Crash Cushion (Select One)*					Sand Barrel Details (2)					Earthwork*		Spare Parts Kit (Select One)*		Obstacle Description	Remarks
					Temporary	Temporary Redirective	Temporary Severe Use	Permanent	Permanent Severe Use	V Length	W Length	X Length	Y Length	Z Length	Excavation Class 10	Embankment in Place	Permanent	Permanent Severe Use		
				FT						FT	FT	FT	FT	FT	CY	CY	EACH	EACH		
1	EB	581+42.00	Rt.	2.00	1						24.25	5.25	3.25	12.00						Design 113
2	WB	581+42.00	Lt.	2.00	1						24.25	5.25	3.25	12.00						Design 113
3	EB	585+32.00	Rt.	2.00	1						24.25	5.25	3.25	12.00						Design 113
4	WB	585+32.00	Lt.	2.00	1						24.25	5.25	3.25	12.00						Design 113
5	EB	590+42.50	Rt.	2.00	1						24.25	5.25	3.25	12.00						Design 213
6	WB	590+42.50	Lt.	2.00	1						24.25	5.25	3.25	12.00						Design 213
7	EB	595+87.50	Rt.	2.00	1						24.25	5.25	3.25	12.00						Design 213
8	WB	595+87.50	Lt.	2.00	1						24.25	5.25	3.25	12.00						Design 213
		Totals:			8															

112-9M
Modified

SHOULDERS

(1) Lane(s) to which the shoulder is adjacent.
(2) Bid Item
(3) Applies only for Paved Shoulders constructed on project with existing granular shoulders.
(4) Does not include shrink.

Calculations assume a HMA unit weight (lbs/cf) of 0, a Special Backfill unit weight (lbs/cf) of 140, and a Granular Shoulder unit weight (lbs/cf) of 140.

Location					Quantities																		Remarks
Road Identification	Direction Of Traffic (1)	Station to Station		Side	P Width	G Width	L Length	Class 13 Waste (3)	Hot Mix Asphalt		Binder	Detour Pavement	Reinforced Paved Shoulder	Special Backfill				Modified Subbase	Granular Shoulder		Earth Shoulder Construction Alternates			
														HMA Alternate		PCC Alternate								
					FT	FT	FT	CY (2)	TON	TON/STA	TONS	SY (2)	SY (2)	TON (2)	TON/STA	TON (2)	TON/STA	CY (2)	TON (2)	TON/STA	STA (2)	HMA CY (4)	PCC CY (4)	
US.30	EB	580+42.00	582+42.00	Rt.	3.0		200.0	14.8				66.7									2.0			Shlds Strengthening.
US.30	EB	581+38.88	581+88.88	Rt.	2 to 0		50.0	1.2				5.6									0.5			Paved G/R.
US.30	EB	581+18.88	581+38.88	Rt.	2.0		20.0	1.0				4.4									0.2			Paved G/R.
US.30	WB	580+42.00	582+42.00	Lt.	3.0		200.0	14.8				66.7									2.0			Shlds Strengthening.
US.30	WB	580+76.38	581+26.38	Lt.	2 to 0		50.0	1.2				5.6									0.5			Paved G/R.
US.30	WB	580+56.38	580+76.38	Lt.	2.0		20.0	1.0				4.4									0.2			Paved G/R.
US.30	EB	584+32.00	586+32.00	Rt.	3.0		200.0	14.8				66.7									2.0			Shlds Strengthening.
US.30	EB	585+47.63	585+97.63	Rt.	0 to 2		50.0	1.2				5.6									0.5			Paved G/R.
US.30	EB	585+97.63	586+17.63	Rt.	2.0		20.0	1.0				4.4									0.2			Paved G/R.
US.30	WB	584+32.00	586+32.00	Lt.	3.0		200.0	14.8				66.7									2.0			Shlds Strengthening.
US.30	WB	584+85.13	585+35.13	Lt.	0 to 2		50.0	1.2				5.6									0.5			Paved G/R.
US.30	WB	585+35.13	585+55.13	Lt.	2.0		20.0	1.0				4.4									0.2			Paved G/R.
US.30	EB	590+12.50	592+12.50	Rt.	3.0		200.0	14.8				66.7									2.0			Shlds Strengthening.
US.30	EB	590+89.38	591+09.38	Rt.	2.0		20.0	1.0				4.4									0.2			Paved G/R.
US.30	EB	591+09.38	591+59.38	Rt.	2 to 0		50.0	1.2				5.6									0.5			Paved G/R.
US.30	WB	590+12.50	592+12.50	Lt.	3.0		200.0	14.8				66.7									2.0			Shlds Strengthening.
US.30	WB	590+51.88	590+71.88	Lt.	6.9		20.0	3.4				15.3									0.2			Paved G/R.
US.30	WB	590+71.88	591+21.88	Lt.	6.9 to 4.9		50.0	7.3				32.8									0.5			Paved G/R.
US.30	WB	591+21.88	591+71.88	Lt.	4.9 to 0		50.0	4.5				13.6									0.5			Paved G/R.
US.30	EB	594+17.50	596+17.50	Rt.	3.0		200.0	14.8				66.7									2.0			Shlds Strengthening.
US.30	EB	594+58.13	595+08.13	Rt.	0 to 4.9		50.0	4.5				13.6									0.5			Paved G/R.
US.30	EB	595+08.13	595+58.13	Rt.	4.9 to 6.9		50.0	7.3				32.8									0.5			Paved G/R.
US.30	EB	595+58.13	595+78.13	Rt.	6.9		20.0	3.4				15.3									0.2			Paved G/R.
US.30	WB	594+17.50	596+17.50	Lt.	3.0		200.0	14.8				66.7									2.0			Shlds Strengthening.
US.30	WB	594+70.63	595+20.63	Lt.	0 to 2		50.0	1.2				5.6									0.5			Paved G/R.
US.30	WB	595+20.63	595+40.63	Lt.	2.0		20.0	1.0				4.4									0.2			Paved G/R.
Totals:								162.0				716.8									22.6			

Design No. 113
File No. 30708

Design No. 213
File No. 30708

PAVEMENT MARKING LINE TYPES

See PM-110

*BCY4 - Place on the same side of the roadway to match existing markings near the project.
**NPY4 - For estimating purposes only. No Passing Zone Lines will be located in the field.
***MNY4 - Factor of 1.00 as value includes number of 4-inch passes to cover median nose area.

BCY4: Broken Centerline (Yellow) @ 0.25 DCY4: Double Centerline (Yellow) @ 2.00 NPY4: No Passing Zone Line (Yellow) @ 1.25 BLW4: Broken Lane Line (White) @ 0.25 ELW4: Edge Line Right (White) @ 1.00
ELY4: Edge Line Left (Yellow) @ 1.00

Location								Length by Line Type (Unfactored)															Remarks
Road ID	Station to Station		Dir. of Travel	Marking Type	Side			BCY4*	DCY4	NPY4**	BLW4	ELW4	ELY4										
					L	C	R	STA	STA	STA	STA	STA	STA	STA	STA	STA	STA	STA	STA	STA	STA	STA	
US.30	580+12.00	582+42.00	BOTH	Removal of Paint		x		2.30															
US.30	584+32.00	586+62.00	BOTH	Removal of Paint		x		2.30															
US.30	580+12.00	586+62.00	EB	Removal of Paint			x					6.50											
US.30	580+12.00	586+62.00	WB	Removal of Paint	x							6.50											
US.30	580+12.00	582+42.00	EB	Wet Retroreflective Removable Tape			x					2.30											
US.30	580+12.00	582+42.00	WB	Wet Retroreflective Removable Tape	x							2.30											
US.30	584+32.00	586+62.00	EB	Wet Retroreflective Removable Tape			x					2.30											
US.30	584+32.00	586+62.00	WB	Wet Retroreflective Removable Tape	x							2.30											
US.30	580+12.00	582+42.00	EB	Removal of Removable Tape			x					2.30											
US.30	580+12.00	582+42.00	WB	Removal of Removable Tape	x							2.30											
US.30	584+32.00	586+62.00	EB	Removal of Removable Tape			x					2.30											
US.30	584+32.00	586+62.00	WB	Removal of Removable Tape	x							2.30											
US.30	580+12.00	582+42.00	BOTH	Waterborne/Solvent Paint		x		2.30															
US.30	584+32.00	586+62.00	BOTH	Waterborne/Solvent Paint		x		2.30															
US.30	580+12.00	586+62.00	EB	Waterborne/Solvent Paint			x					6.50											
US.30	580+12.00	586+62.00	WB	Waterborne/Solvent Paint	x							6.50											
US.30	589+12.50	591+42.50	BOTH	Removal of Paint		x		2.30															
US.30	594+87.50	597+17.50	BOTH	Removal of Paint		x		2.30															
US.30	589+12.50	597+17.50	EB	Removal of Paint			x					8.05											
US.30	589+12.50	597+17.50	WB	Removal of Paint	x							8.05											
US.30	589+12.50	591+42.50	EB	Wet Retroreflective Removable Tape			x					2.30											
US.30	589+12.50	591+42.50	WB	Wet Retroreflective Removable Tape	x							2.30											
US.30	594+87.50	597+17.50	EB	Wet Retroreflective Removable Tape			x					2.30											
US.30	594+87.50	597+17.50	WB	Wet Retroreflective Removable Tape	x							2.30											
US.30	589+12.50	591+42.50	EB	Removal of Removable Tape			x					2.30											
US.30	589+12.50	591+42.50	WB	Removal of Removable Tape	x							2.30											
US.30	594+87.50	597+17.50	EB	Removal of Removable Tape			x					2.30											
US.30	594+87.50	597+17.50	WB	Removal of Removable Tape	x							2.30											
US.30	589+12.50	591+42.50	BOTH	Waterborne/Solvent Paint		x		2.30															
US.30	594+87.50	597+17.50	BOTH	Waterborne/Solvent Paint		x		2.30															
US.30	589+12.50	597+17.50	EB	Waterborne/Solvent Paint			x					6.50											
US.30	589+12.50	597+17.50	WB	Waterborne/Solvent Paint	x							6.50											
				Factored Total: Waterborne/Solvent Paint				2.30	-	-	-	26.00	-	-	-	-	-	-	-	-	-	-	
				Factored Total: Wet Retroreflective Removable Tape				-	-	-	-	18.40	-	-	-	-	-	-	-	-	-	-	
				Factored Total: Removal of Paint				2.30	-	-	-	29.10	-	-	-	-	-	-	-	-	-	-	
				Factored Total: Removal of Removable Tape				-	-	-	-	18.40	-	-	-	-	-	-	-	-	-	-	
				Bid Quantity: Painted Pavement Markings, Waterborne or Solvent-Based							28.30												
				Bid Quantity: Wet Retroreflective Removable Tape Markings							18.40												
				Bid Quantity: Pavement Markings Removed							31.40												
				Incidental Removal of Removable Tape							18.40												

Design No. 113
File No. 30708

Design No. 213
File No. 30708

108-23A
08-01-08

TRAFFIC CONTROL PLAN

One lane of through traffic will be maintained on US.34 at all times.

The contractor is to provide access at all times for adjacent property owners.

108-26A
08-01-08

STAGING NOTES

Stage 1: Shoulder Strengthening westbound lanes.

Stage 2: Shift traffic to westbound lanes
Build Bridge Approachs.
Shoulder Strengthening eastbound lanes.

Stage 3: Shift traffic to eastbound lanes.
Build Bridge Approachs.

102-15
08-01-08

TABULATION OF SPECIAL EVENTS

Event	Location	Date
None Provided.		

111-01
04-17-12

COORDINATED OPERATIONS

Other work in progress during the same period of time will include the construction of the projects listed. Coordinate operations with those of other contractors working within the same area.

Project	Type of Work
None Provided.	

Design No. 113
File No. 30708

Design No. 213
File No. 30708