Sometimes the use of older plan details placed into new plan details may cause arrowhead and dimension terminators to print on the wrong color. Below is shown a possible fix to correct the print discrepancy.

A couple of known instances that have happened, the use of shared cells from past cell placement and the use of a past version of the Bridge Office dimension library.

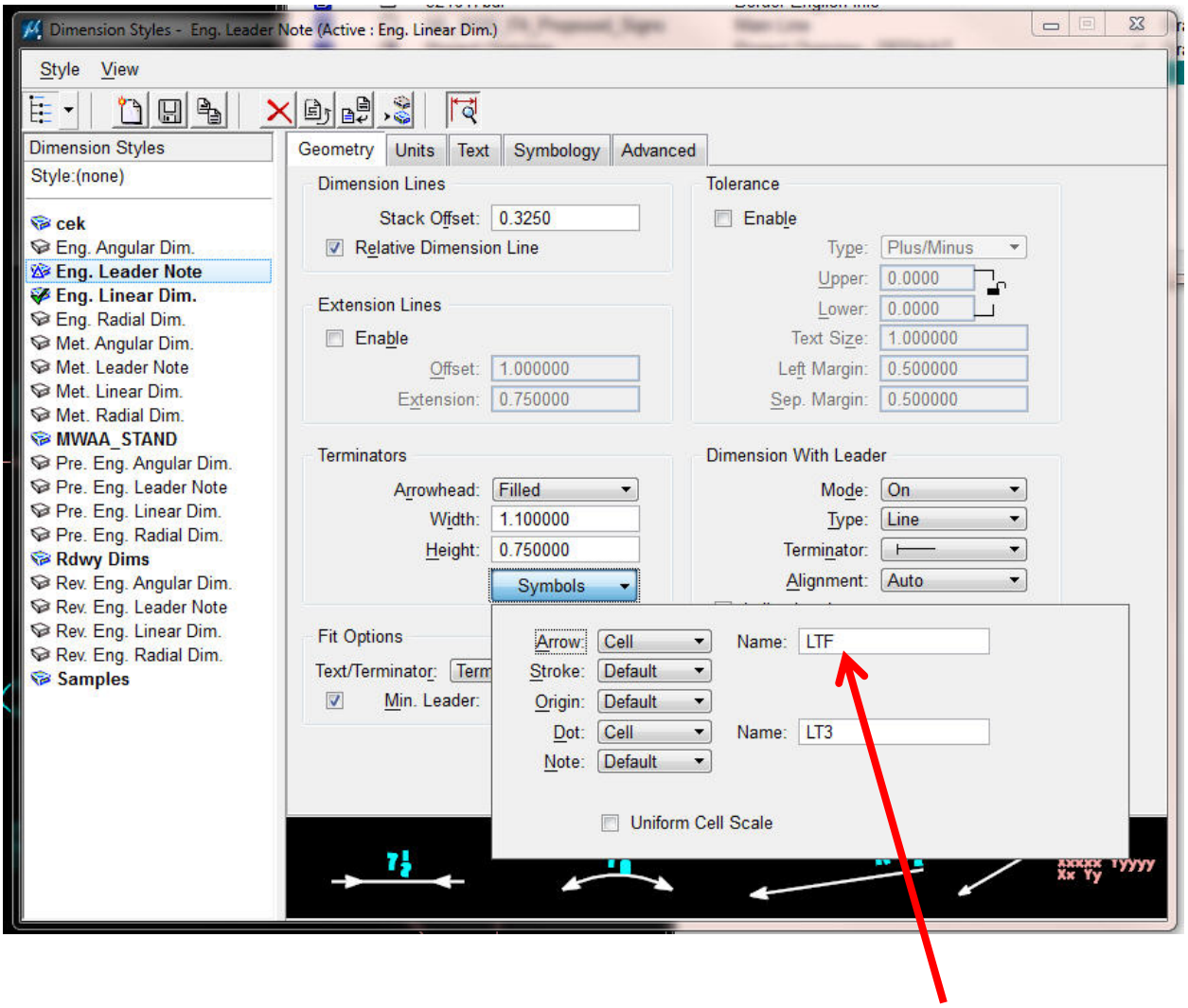

The old LTF arrowhead terminator has been known to cause problems in the past. The current LTAF terminator has been used to replace the LTF.

By updating the dimension styles from the library this would use the current LTAF linear terminator.

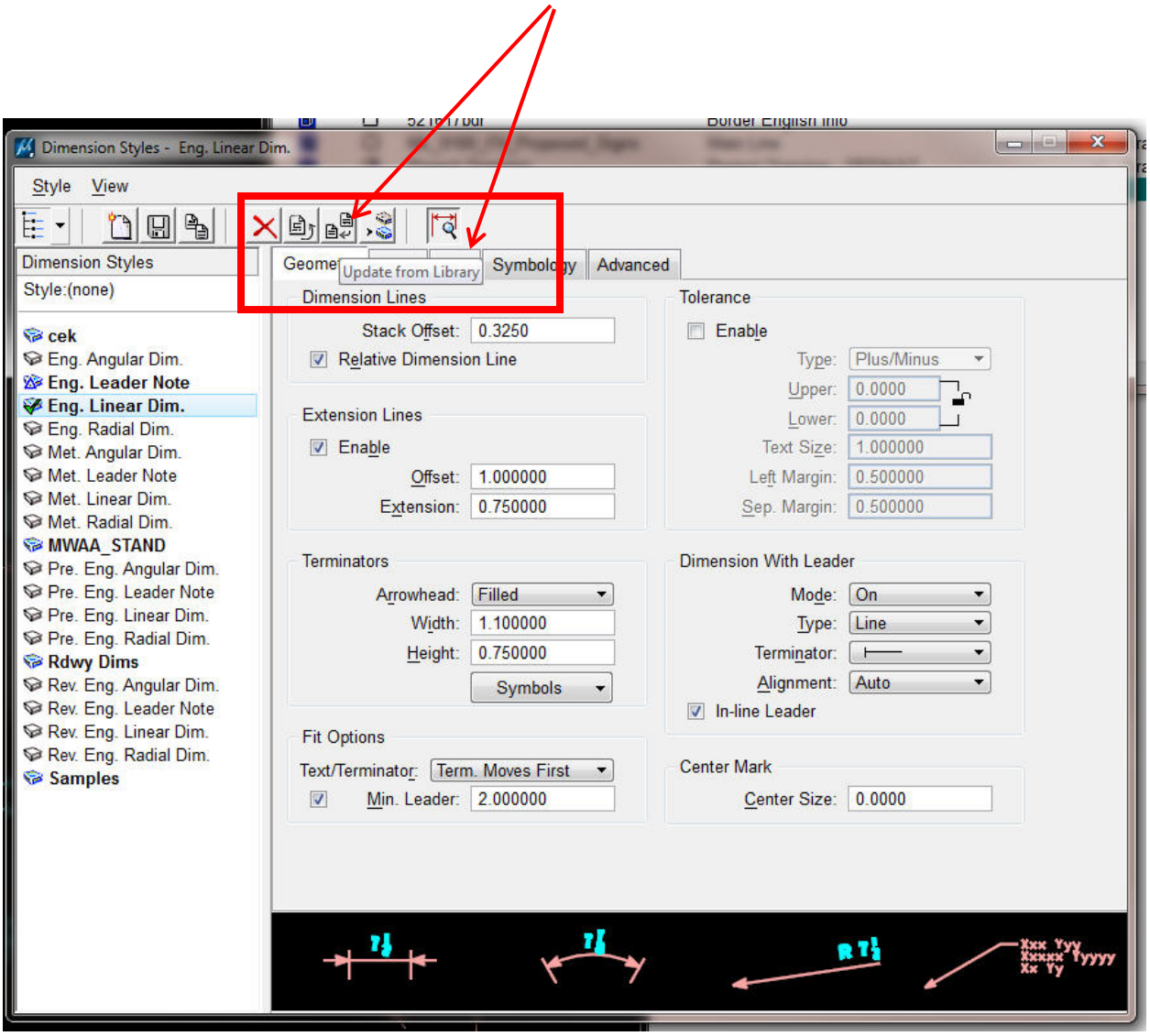

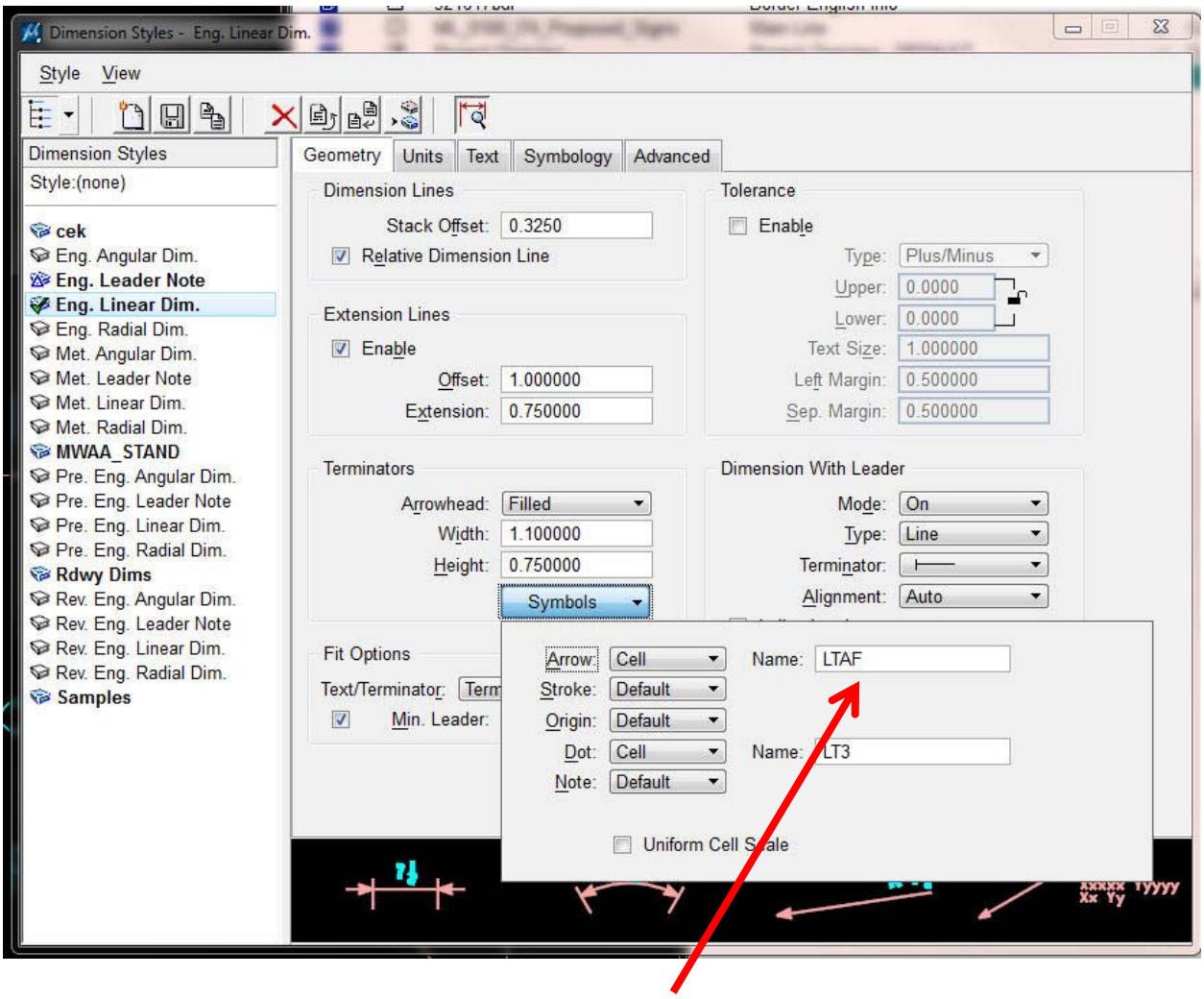

The current arrowhead cell being used in Bridge Office final design dimensions is LTAF.

Once the dimensions styles have been updated, then apply the correct style to the corresponding dimension that needs updated using the Change Dimension tool.

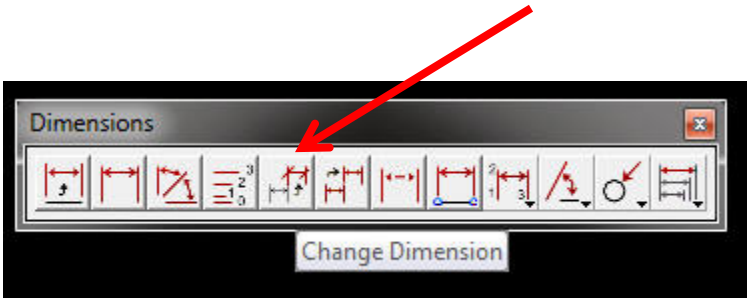

For the dimensions that have been "dropped" this would require the use of the "Replace Cells" tool to change the arrowhead from LTF to LTAF. The existing cells used were placed with "Use Shared Cells" check on. By having them placed this way it means that the properties of the cell are kept in the design file and not necessarily updated from the cell library. Updating one instance of a shared cell will update all the others in the file. Some of the dimensions are using a dot terminator (cell LT3). The best way to fix one of these existing terminators is to copy one of the dimensions

using this cell, drop the dimension and then use the “Replace Cells” tool updating the LT3 with the updated version with the same name.

Depending on what modifications have been done to the existing LTF cell, some of the changed arrowheads may require resizing or rotating for proper orientation, this does not always happen.

“Replace Global” will change all instances of the cells in the file. Using this tool to update the LTF cell, rather than replace, from current updated cell library should correct the print issue as well. The reason to replace the cell with LTAF would be to have all the arrowheads using the same cell as the current dimension styles use.

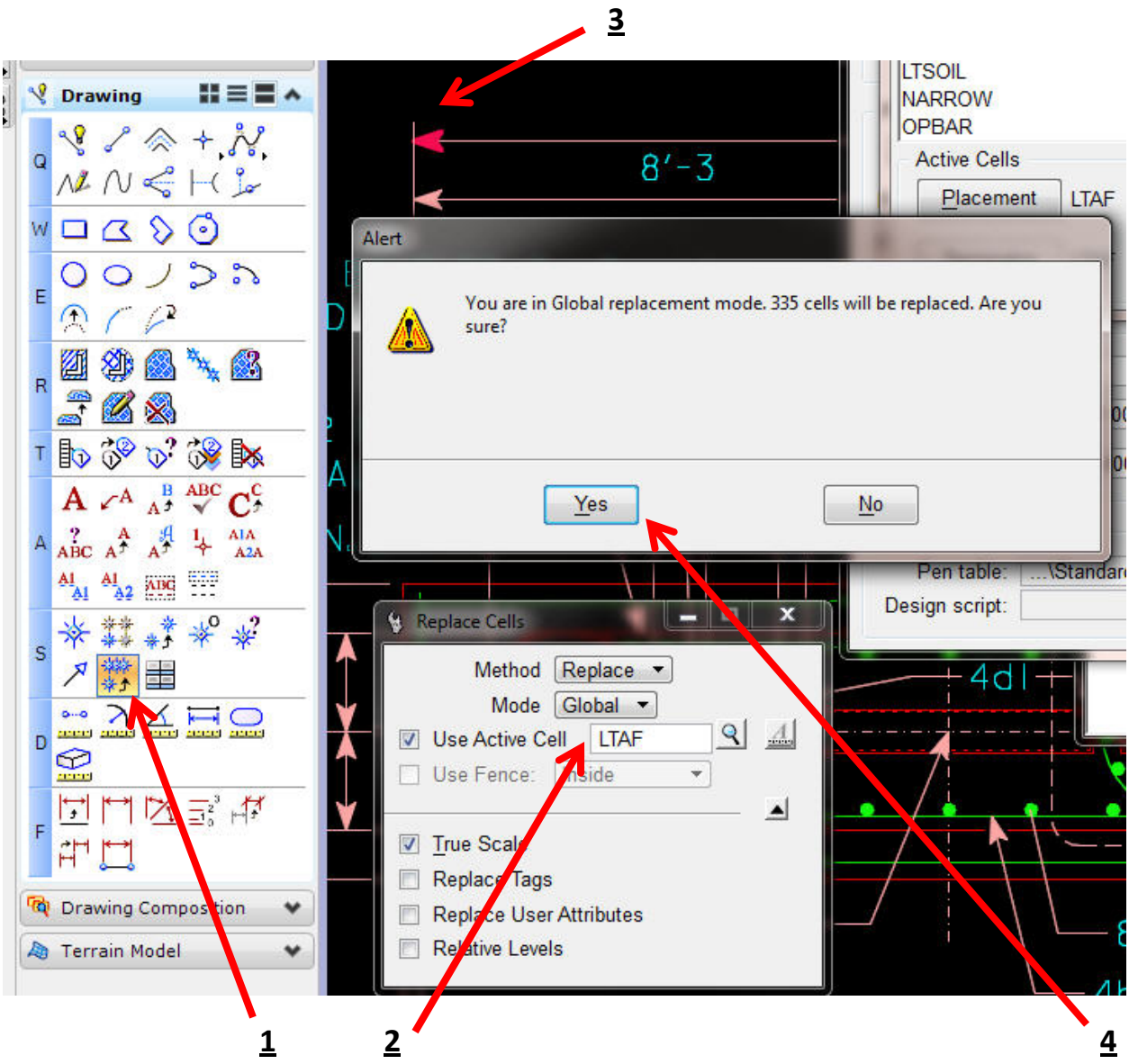

1) Select the “Replace Cells” tool.
2) Select the new replacement cell that will be replacing, or updating, the existing cell. Set Method to Update or Replace. Set Mode to Single or Global.
3) Select the existing cell that is to be replaced.
4) Select Yes to apply the change.

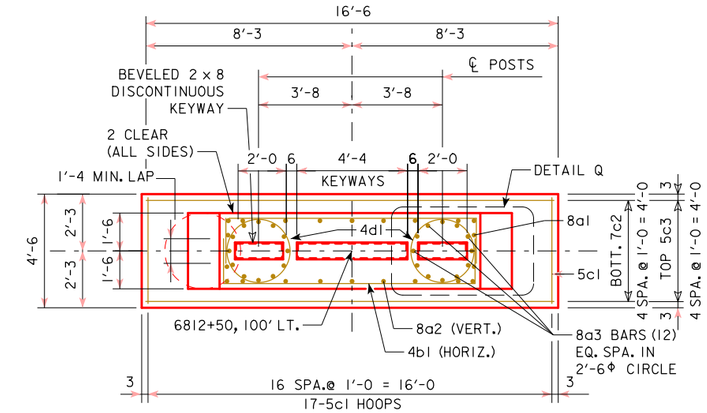

PLAN - OUTSIDE FOUNDATION

ANCHOR BOLT ASSEMBLIES NOT SHOWN

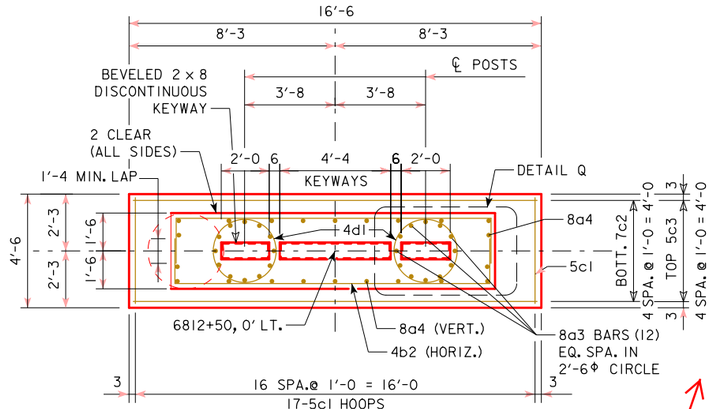

PLAN - MEDIAN FOUNDATION

ANCHOR BOLT ASSEMBLIES NOT SHOWN

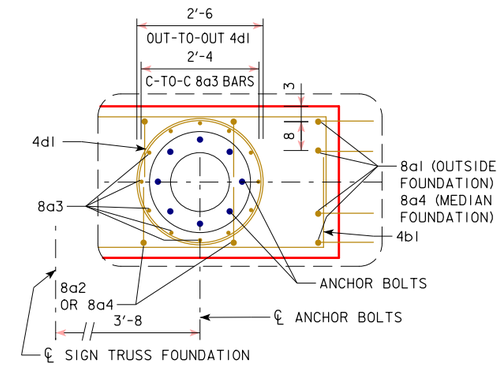

DETAIL Q

ANCHOR BOLT AND ANCHOR REINFORCING PLACEMENT

KEYWAY NOT SHOWN

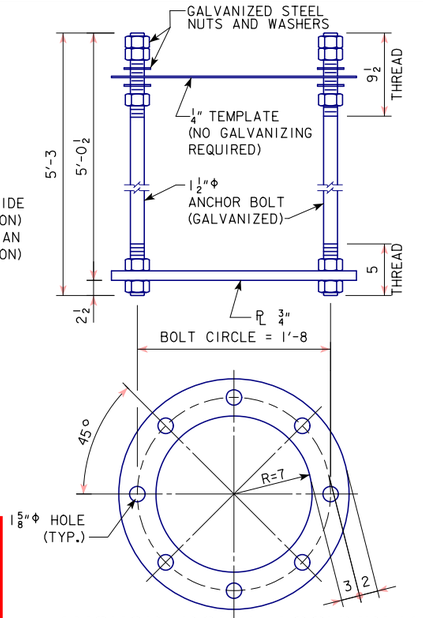

ANCHOR BOLT ASSEMBLY

Existing plan sheet as shown with print output discrepancies. Various arrowheads and dot terminators are printing wrong color.

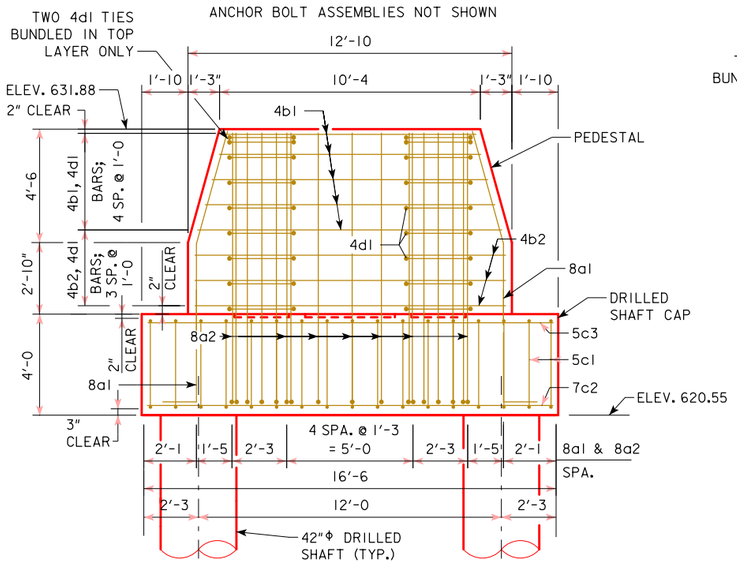

SIDE ELEVATION - OUTSIDE FOUNDATION

ANCHOR BOLT ASSEMBLIES NOT SHOWN

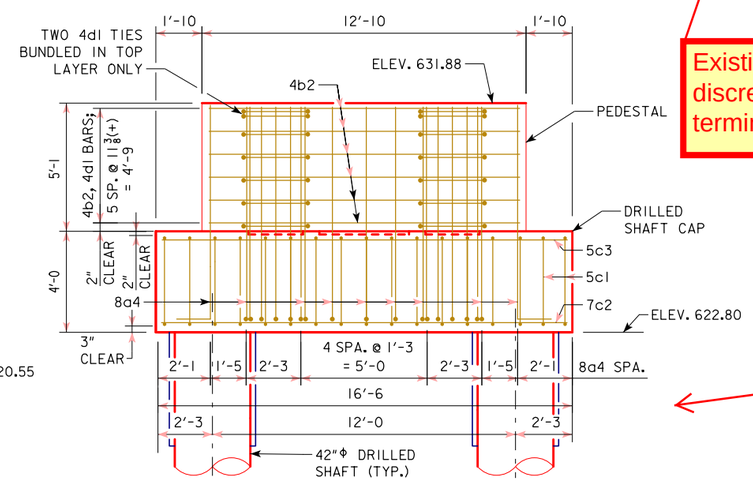

SIDE ELEVATION - MEDIAN FOUNDATION

ANCHOR BOLT ASSEMBLIES NOT SHOWN

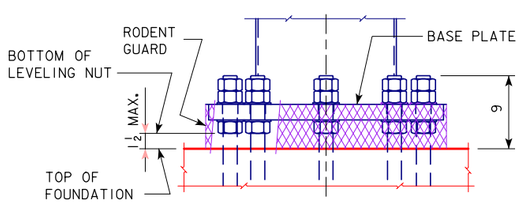

POST BASE DETAIL

SHOWING THE RODENT GUARD

THE RODENT GUARD SHALL BE PLACED AROUND THE BASE PLATE.
THE RODENT GUARD IS STAINLESS STEEL STANDARD GRADE WIRE CLOTH, 1/4" MAXIMUM OPENING WITH A MINIMUM WIRE DIAMETER OF AWG NO. 16 WITH A MINIMUM 2" LAP.

SECURE WIRE CLOTH TO BASE PLATE AFTER ERECTION WITH 3/4" STAINLESS STEEL BANDING. THE RODENT GUARD SHALL NOT EXTEND ABOVE THE TOP OF THE BASE PLATE.

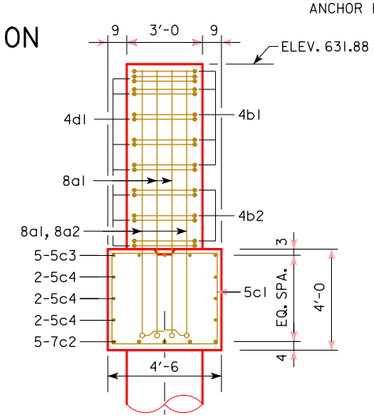

END ELEVATION OUTSIDE FOUNDATION

REINFORCING - 8a3 NOT SHOWN

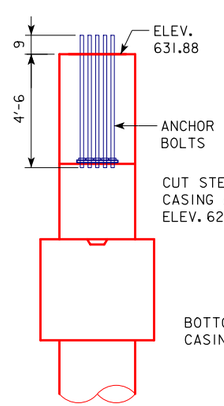

END ELEVATION

ANCHOR BOLTS

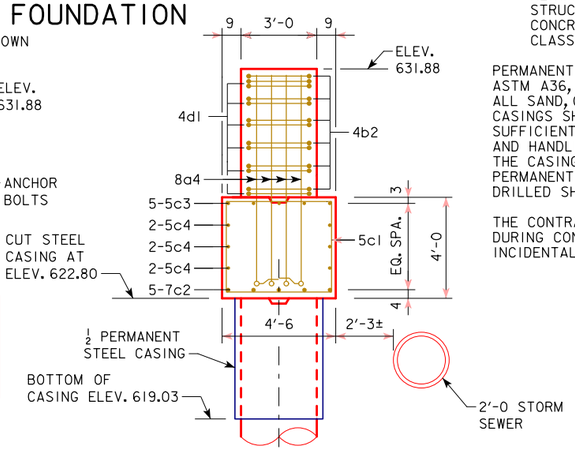

END ELEVATION MEDIAN FOUNDATION

REINFORCING - 8a3 NOT SHOWN

GENERAL NOTES:

THIS SHEET REPLACES IOWA DOT STANDARD SHEET SOST-17-11 AND IS APPLICABLE TO THIS PROJECT ONLY, FOR THE STEEL OVERHEAD SIGN TRUSS LOCATED AT STA. 6812+50. THIS SHEET SHALL NOT BE USED FOR ANY OTHER STEEL OVERHEAD SIGN TRUSS LOCATIONS.

STRUCTURAL CONCRETE, CLASS C, SHALL BE USED FOR THE FOUNDATION.

TWO ANCHOR BOLT ASSEMBLIES INCLUDING ANCHOR PLATES, TEMPLATES, NUTS (5 PER BOLT) AND WASHERS (2 PER BOLT) ARE REQUIRED PER FOUNDATION.

ALL ANCHOR BOLT MATERIALS AND GALVANIZING SHALL BE IN ACCORDANCE WITH ARTICLE 4187.01, C, 3 OF THE STANDARD SPECIFICATIONS.

PRICE BID FOR CONTRACT ITEMS SHALL INCLUDE ALL LABOR AND MATERIALS NECESSARY TO CONSTRUCT OVERHEAD SIGN TRUSS FOUNDATIONS AS DETAILED HEREON. THE COST OF FURNISHING AND INSTALLING ANCHOR BOLT ASSEMBLIES AND RODENT GUARDS ARE TO BE INCLUDED IN THE UNIT PRICE BID FOR STRUCTURAL CONCRETE. CONTRACT ITEMS FOR OVERHEAD SIGN TRUSS FOUNDATION CONSTRUCTION ARE:

- REINFORCING STEEL, EPOXY COATED - POUNDS
- REINFORCING STEEL - POUNDS
- STRUCTURAL CONCRETE (MISCELLANEOUS) - CUBIC YARDS
- CONCRETE DRILLED SHAFT, 42 IN. DIAMETER - LINEAR FEET
- CLASS 20 EXCAVATION - CUBIC YARDS

PERMANENT STEEL CASINGS FOR THE DRILLED SHAFTS SHALL BE OF MATERIAL MEETING ASTM A36, A242 OR A252 (GRADE 2 OR 3). PERMANENT CASINGS SHALL BE CLEAN OF ALL SAND, GRAVEL, BONDED CONCRETE, OR FOREIGN MATERIALS BEFORE USE. PERMANENT CASINGS SHALL BE OF AT LEAST THE THICKNESS SHOWN IN THESE PLANS AND OF SUFFICIENT STRENGTH TO RESIST DAMAGE AND DEFORMATION FROM TRANSPORTATION AND HANDLING, INSTALLATION STRESSES, AND ALL PRESSURES AND FORCES ACTING ON THE CASING DURING CONSTRUCTION. THE COST OF FURNISHING AND INSTALLING PERMANENT STEEL CASINGS SHALL BE INCLUDED WITH THE PRICE BID FOR "CONCRETE DRILLED SHAFT, 42 IN. DIAMETER."

THE CONTRACTOR SHALL TAKE CARE NOT TO DAMAGE THE 24 INCH STORM SEWER DURING CONSTRUCTION. ALL COST OF PROTECTING THE PIPE WILL BE CONSIDERED INCIDENTAL TO CONSTRUCTION AND NO DIRECT PAYMENT WILL BE MADE.

DRILLED SHAFT FOUNDATIONS FOR STEEL OVERHEAD SIGN TRUSS

FOUNDATION DETAILS

STATION 6812+50 — MAY 2018

SCOTT COUNTY

IOWA DEPARTMENT OF TRANSPORTATION - HIGHWAY DIVISION

DESIGN SHEET NO. 1 OF 2 — FILE NO. _____ — DESIGN NO. 1118

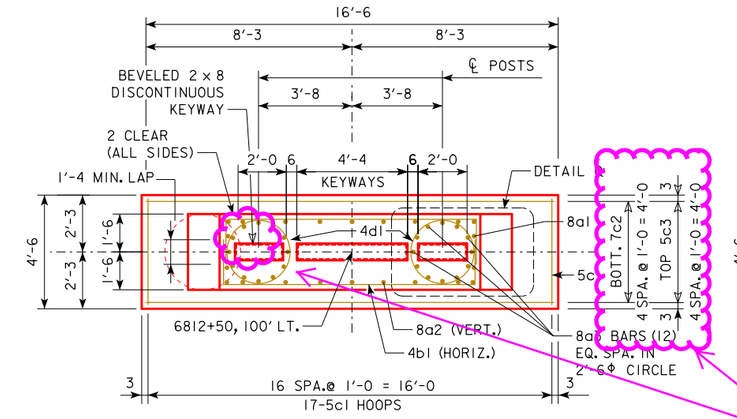

PLAN - OUTSIDE FOUNDATION

ANCHOR BOLT ASSEMBLIES NOT SHOWN

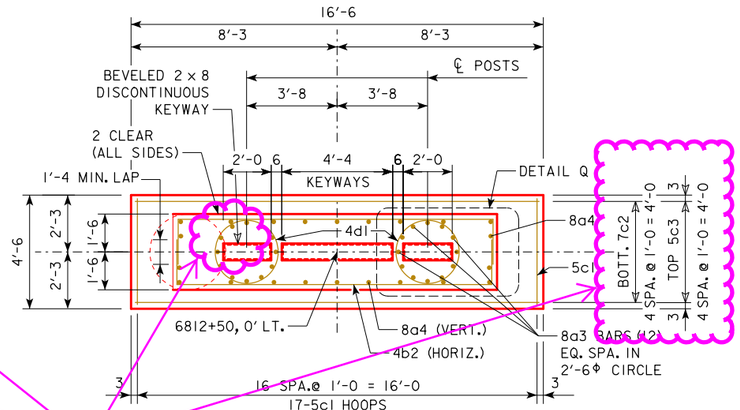

PLAN - MEDIAN FOUNDATION

ANCHOR BOLT ASSEMBLIES NOT SHOWN

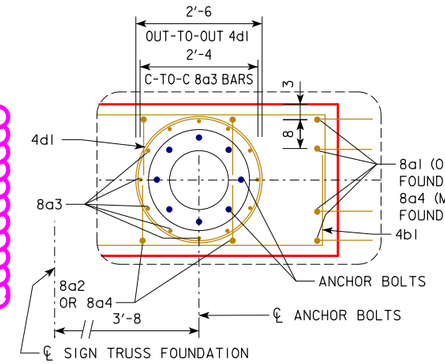

DETAIL Q

ANCHOR BOLT AND ANCHOR REINFORCING PLACEMENT

KEYWAY NOT SHOWN

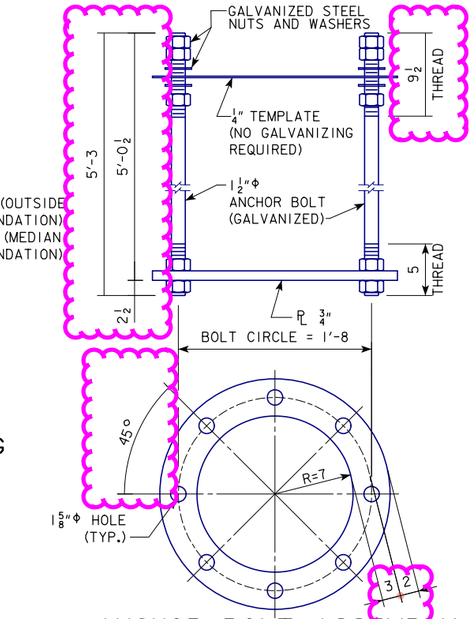

ANCHOR BOLT ASSEMBLY

Some arrowheads are unfilled linear elements that would need to be drawn filled or replaced with the proper arrowhead terminator.

Plan sheet as shown after "Replace Cells" tool was used to replace LTF cell with LTAF. Some dimensions need updated to fix terminator display.

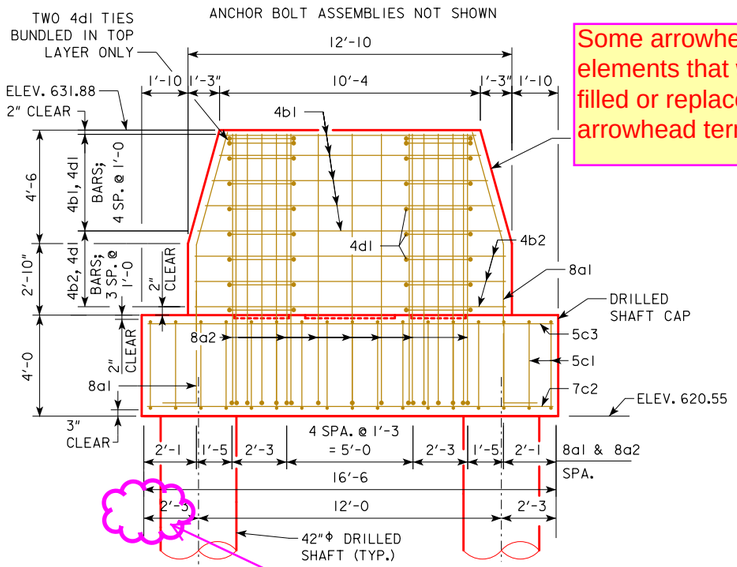

SIDE ELEVATION - OUTSIDE FOUNDATION

ANCHOR BOLT ASSEMBLIES NOT

Adjust linear element for text clarity.

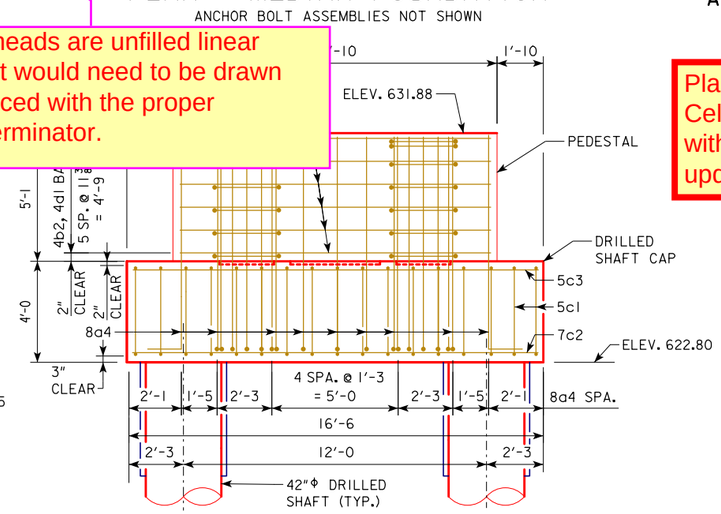

SIDE ELEVATION - MEDIAN FOUNDATION

ANCHOR BOLT ASSEMBLIES NOT SHOWN

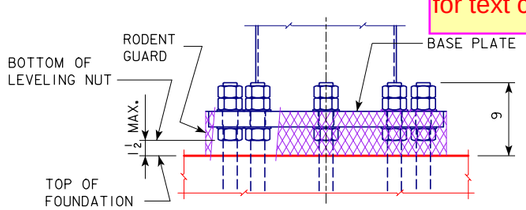

POST BASE DETAIL

SHOWING THE RODENT GUARD

THE RODENT GUARD SHALL BE PLACED AROUND THE BASE PLATE.
THE RODENT GUARD IS STAINLESS STEEL STANDARD GRADE WIRE CLOTH, 1/4" MAXIMUM OPENING WITH A MINIMUM WIRE DIAMETER OF AWG NO. 16 WITH A MINIMUM 2" LAP.

SECURE WIRE CLOTH TO BASE PLATE AFTER ERECTION WITH 3/4" STAINLESS STEEL BANDING. THE RODENT GUARD SHALL NOT EXTEND ABOVE THE TOP OF THE BASE PLATE.

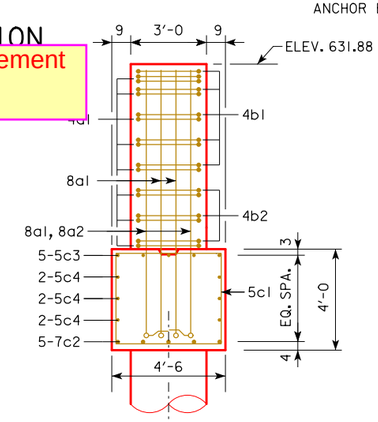

END ELEVATION OUTSIDE FOUNDATION

REINFORCING - 8a3 NOT SHOWN

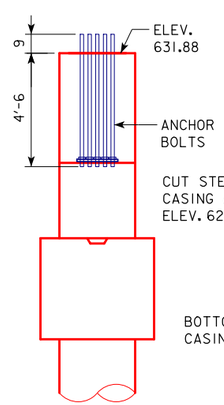

END ELEVATION

ANCHOR BOLTS

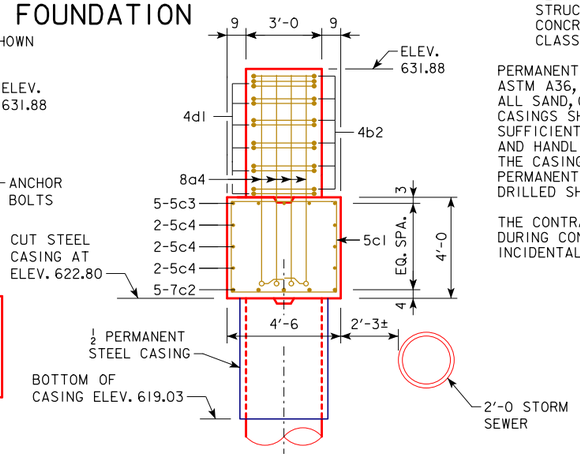

END ELEVATION MEDIAN FOUNDATION

REINFORCING - 8a3 NOT SHOWN

NOTES:

THIS SHEET REPLACES IOWA DOT STANDARD SHEET SOST-17-11 AND IS APPLICABLE TO THIS PROJECT ONLY, FOR THE STEEL OVERHEAD SIGN TRUSS LOCATED AT STA. 6812+50. THIS SHEET SHALL NOT BE USED FOR ANY OTHER STEEL OVERHEAD SIGN TRUSS LOCATIONS.

STRUCTURAL CONCRETE, CLASS C, SHALL BE USED FOR THE FOUNDATION.

TWO ANCHOR BOLT ASSEMBLIES INCLUDING ANCHOR PLATES, TEMPLATES, NUTS (5 PER BOLT) AND WASHERS (2 PER BOLT) ARE REQUIRED PER FOUNDATION.

ALL ANCHOR BOLT MATERIALS AND GALVANIZING SHALL BE IN ACCORDANCE WITH ARTICLE 4187.01, C, 3 OF THE STANDARD SPECIFICATIONS.

PRICE BID FOR CONTRACT ITEMS SHALL INCLUDE ALL LABOR AND MATERIALS NECESSARY TO CONSTRUCT OVERHEAD SIGN TRUSS FOUNDATIONS AS DETAILED HEREON. THE COST OF FURNISHING AND INSTALLING ANCHOR BOLT ASSEMBLIES AND RODENT GUARDS ARE TO BE INCLUDED IN THE UNIT PRICE BID FOR STRUCTURAL CONCRETE. CONTRACT ITEMS FOR OVERHEAD SIGN TRUSS FOUNDATION CONSTRUCTION ARE:

- REINFORCING STEEL, EPOXY COATED - POUNDS
- REINFORCING STEEL - POUNDS
- STRUCTURAL CONCRETE (MISCELLANEOUS) - CUBIC YARDS
- CONCRETE DRILLED SHAFT, 42 IN. DIAMETER - LINEAR FEET
- CLASS 20 EXCAVATION - CUBIC YARDS

PERMANENT STEEL CASINGS FOR THE DRILLED SHAFTS SHALL BE OF MATERIAL MEETING ASTM A36, A242 OR A252 (GRADE 2 OR 3). PERMANENT CASINGS SHALL BE CLEAN OF ALL SAND, GRAVEL, BONDED CONCRETE, OR FOREIGN MATERIALS BEFORE USE. PERMANENT CASINGS SHALL BE OF AT LEAST THE THICKNESS SHOWN IN THESE PLANS AND OF SUFFICIENT STRENGTH TO RESIST DAMAGE AND DEFORMATION FROM TRANSPORTATION AND HANDLING, INSTALLATION STRESSES, AND ALL PRESSURES AND FORCES ACTING ON THE CASING DURING CONSTRUCTION. THE COST OF FURNISHING AND INSTALLING PERMANENT STEEL CASINGS SHALL BE INCLUDED WITH THE PRICE BID FOR "CONCRETE DRILLED SHAFT, 42 IN. DIAMETER."

THE CONTRACTOR SHALL TAKE CARE NOT TO DAMAGE THE 24 INCH STORM SEWER DURING CONSTRUCTION. ALL COST OF PROTECTING THE PIPE WILL BE CONSIDERED INCIDENTAL TO CONSTRUCTION AND NO DIRECT PAYMENT WILL BE MADE.

DRILLED SHAFT FOUNDATIONS FOR STEEL OVERHEAD SIGN TRUSS FOUNDATION DETAILS

STATION 6812+50 — MAY 2018

SCOTT COUNTY

IOWA DEPARTMENT OF TRANSPORTATION - HIGHWAY DIVISION

DESIGN SHEET NO. 1 OF 2 — FILE NO. — DESIGN NO. 1118

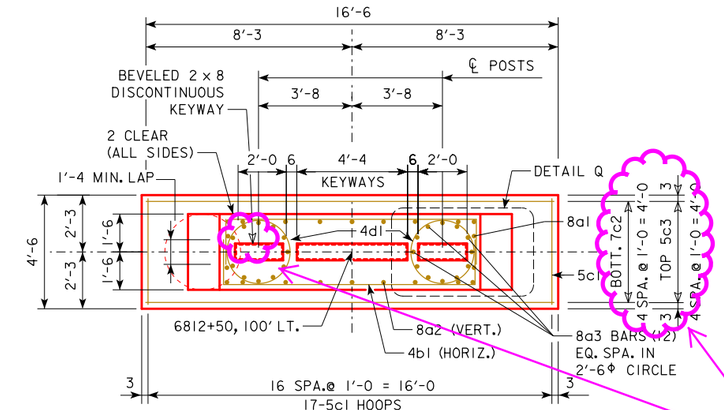

PLAN - OUTSIDE FOUNDATION

ANCHOR BOLT ASSEMBLIES NOT SHOWN

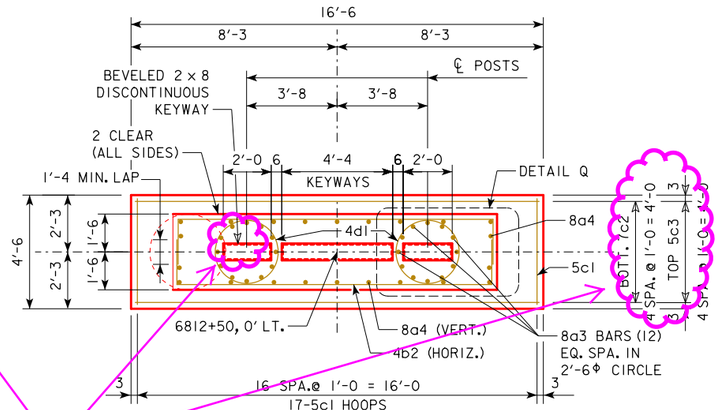

PLAN - MEDIAN FOUNDATION

ANCHOR BOLT ASSEMBLIES NOT SHOWN

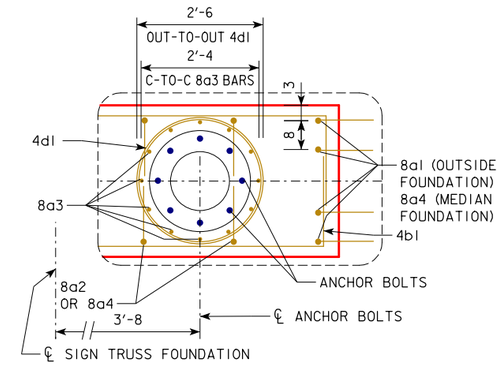

DETAIL Q

ANCHOR BOLT AND ANCHOR REINFORCING PLACEMENT

KEYWAY NOT SHOWN

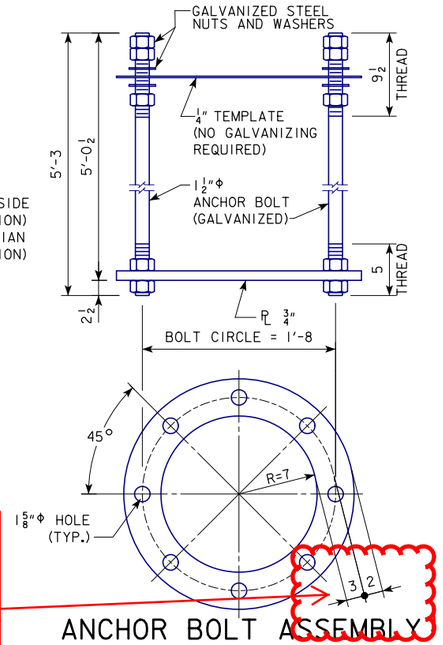

ANCHOR BOLT ASSEMBLY

Some arrowheads are unfilled linear elements that would need to be drawn filled or replaced with the proper arrowhead terminator.

Plan sheet as shown after the dimensions were updated to fix the terminator display. The LT3 cell used as the dot terminator was updated with the updated LT3 cell from the current brgFinal.cel cell library.

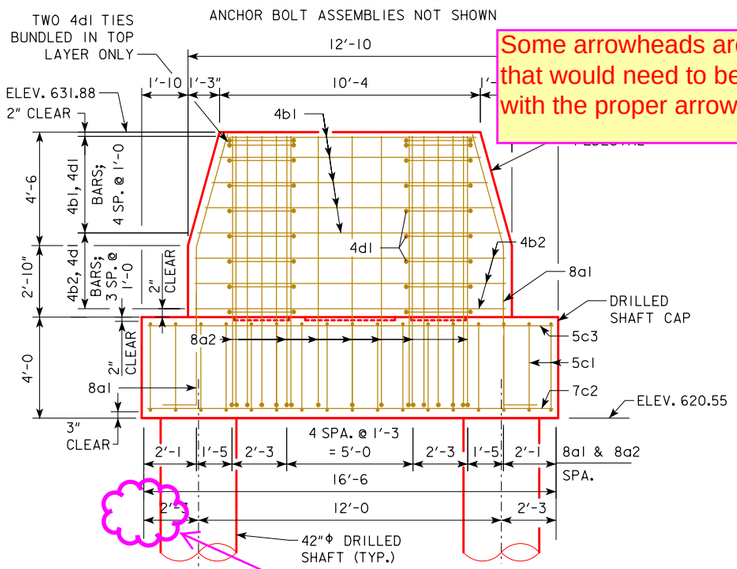

SIDE ELEVATION - OUTSIDE FOUNDATION

ANCHOR BOLT ASSEMBLIES NOT

Adjust linear element for text clarity.

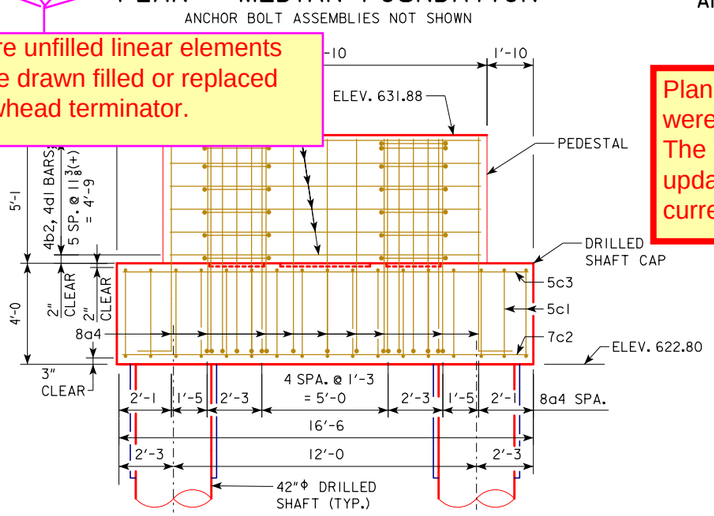

SIDE ELEVATION - MEDIAN FOUNDATION

ANCHOR BOLT ASSEMBLIES NOT SHOWN

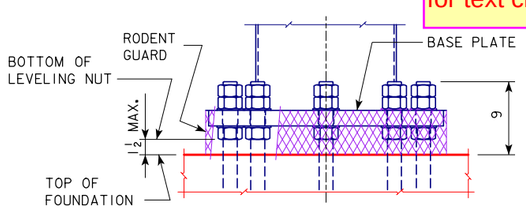

POST BASE DETAIL

SHOWING THE RODENT GUARD

THE RODENT GUARD SHALL BE PLACED AROUND THE BASE PLATE.
THE RODENT GUARD IS STAINLESS STEEL STANDARD GRADE WIRE CLOTH, 1/4" MAXIMUM OPENING WITH A MINIMUM WIRE DIAMETER OF AWG NO. 16 WITH A MINIMUM 2" LAP.

SECURE WIRE CLOTH TO BASE PLATE AFTER ERECTION WITH 3/4" STAINLESS STEEL BANDING. THE RODENT GUARD SHALL NOT EXTEND ABOVE THE TOP OF THE BASE PLATE.

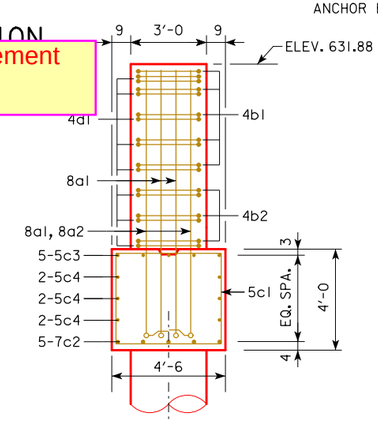

END ELEVATION

OUTSIDE FOUNDATION

REINFORCING - 8a3 NOT SHOWN

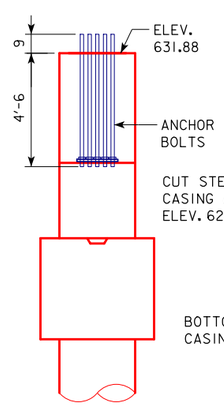

END ELEVATION

ANCHOR BOLTS

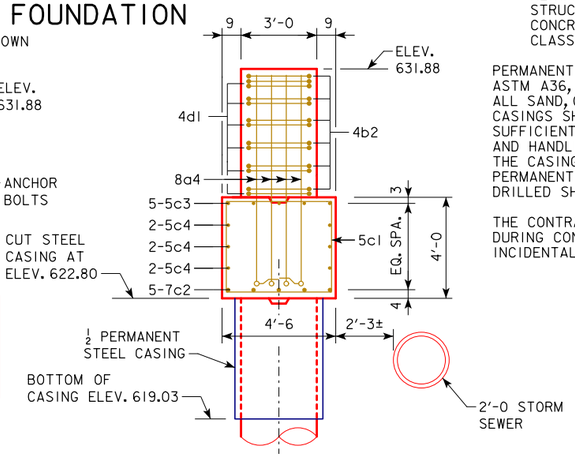

END ELEVATION

MEDIAN FOUNDATION

REINFORCING - 8a3 NOT SHOWN

STANDARD SHEET SOST-17-11 AND IS APPLICABLE TO STEEL OVERHEAD SIGN TRUSS LOCATED AT STA. 6812+50. THIS SHEET SHALL NOT BE USED FOR ANY OTHER STEEL OVERHEAD SIGN TRUSS LOCATIONS.

STRUCTURAL CONCRETE, CLASS C, SHALL BE USED FOR THE FOUNDATION.

TWO ANCHOR BOLT ASSEMBLIES INCLUDING ANCHOR PLATES, TEMPLATES, NUTS (5 PER BOLT) AND WASHERS (2 PER BOLT) ARE REQUIRED PER FOUNDATION.

ALL ANCHOR BOLT MATERIALS AND GALVANIZING SHALL BE IN ACCORDANCE WITH ARTICLE 4187.01, C, 3 OF THE STANDARD SPECIFICATIONS.

PRICE BID FOR CONTRACT ITEMS SHALL INCLUDE ALL LABOR AND MATERIALS NECESSARY TO CONSTRUCT OVERHEAD SIGN TRUSS FOUNDATIONS AS DETAILED HEREON. THE COST OF FURNISHING AND INSTALLING ANCHOR BOLT ASSEMBLIES AND RODENT GUARDS ARE TO BE INCLUDED IN THE UNIT PRICE BID FOR STRUCTURAL CONCRETE. CONTRACT ITEMS FOR OVERHEAD SIGN TRUSS FOUNDATION CONSTRUCTION ARE:

- REINFORCING STEEL, EPOXY COATED - POUNDS
- REINFORCING STEEL - POUNDS
- STRUCTURAL CONCRETE (MISCELLANEOUS) - CUBIC YARDS
- CONCRETE DRILLED SHAFT, 42 IN. DIAMETER - LINEAR FEET
- CLASS 20 EXCAVATION - CUBIC YARDS

PERMANENT STEEL CASINGS FOR THE DRILLED SHAFTS SHALL BE OF MATERIAL MEETING ASTM A36, A242 OR A252 (GRADE 2 OR 3). PERMANENT CASINGS SHALL BE CLEAN OF ALL SAND, GRAVEL, BONDED CONCRETE, OR FOREIGN MATERIALS BEFORE USE. PERMANENT CASINGS SHALL BE OF AT LEAST THE THICKNESS SHOWN IN THESE PLANS AND OF SUFFICIENT STRENGTH TO RESIST DAMAGE AND DEFORMATION FROM TRANSPORTATION AND HANDLING, INSTALLATION STRESSES, AND ALL PRESSURES AND FORCES ACTING ON THE CASING DURING CONSTRUCTION. THE COST OF FURNISHING AND INSTALLING PERMANENT STEEL CASINGS SHALL BE INCLUDED WITH THE PRICE BID FOR "CONCRETE DRILLED SHAFT, 42 IN. DIAMETER."

THE CONTRACTOR SHALL TAKE CARE NOT TO DAMAGE THE 24 INCH STORM SEWER DURING CONSTRUCTION. ALL COST OF PROTECTING THE PIPE WILL BE CONSIDERED INCIDENTAL TO CONSTRUCTION AND NO DIRECT PAYMENT WILL BE MADE.

DRILLED SHAFT FOUNDATIONS FOR STEEL OVERHEAD SIGN TRUSS FOUNDATION DETAILS

STATION 6812+50 — MAY 2018

SCOTT COUNTY

IOWA DEPARTMENT OF TRANSPORTATION - HIGHWAY DIVISION

DESIGN SHEET NO. 1 OF 2 FILE NO. _____ DESIGN NO. 1118