Iowa Culvert Hydraulics Software
Version 3.0

Software User's Manual
2016

You can click on an item in the Table of Contents to jump directly to that section.

Table of Contents

Introduction: Iowa Culverts Hydraulics Software, Version 3.0 3
Iowa DOT Culvert Program 4
Site Identification 5
Design-Q's 5
The Iowa Runoff Chart 5
Design-Q Table 6
Tailwater 8
Channel Cross-Section 8
Rating Curve 11
Q-Depth 12
Culvert Design 13
IDOT Standard Design 14
Tapered Inlet Design 15
Drop Inlet Design 18
General Design 24
Erosion 29
NE Scour Hole Design 29
NE Plunge Basin Design 31
Hec-14 Riprap Basin 36
Appendices 42
Appendix A: Hydraulic Design of Highway Culverts, HDS-5 42
Appendix B: Copying and Pasting Values 42
Appendix C: The Iowa Runoff Chart 43
Appendix D: Tailwater Computations 46
Appendix E: Tapered Inlet Design 48
Appendix F: Tapered Inlet Calculations 54
Appendix G: Drop Inlet Design 56
Appendix H: General Design Inlets Nomenclature 62
Appendix I: Inlet Control 63
Appendix J: Outlet Control 65
Appendix K: Exit Velocity 67
Appendix L: IDOT Standard Sizes 68
Appendix M: NE Scour Hole Design Methodology 75
Appendix N: NE Plunge Basin 77
Appendix O: Hec-14 Riprap Basin 78

Introduction: Iowa Culverts Hydraulics Software, Version 3.0

The Iowa Culvert Hydraulics Software was written to assist Consultants, City, County and State Engineers with the hydraulic design of culverts in Iowa. The software implements the methods and standards used by the Iowa Department of Transportation (IDOT) for the hydraulic design of culverts.

This user manual covers version 3 of the software.

This user manual can be accessed as a pdf file from the software, from the menu item "Help".

The software incorporates,

- Runoff Estimation
  - Iowa Runoff Chart
- Tailwater depth estimation from channel cross-section information
- Iowa DOT design methodologies for
  - Standard designs
  - Taper Inlets
  - Drop Inlets
- General Culvert Design calculations
- The design of energy dissipators for outlet erosion control
  - NE Scour Hole Design
  - NE Plunge Basic Design
  - HEC-14 Riprap Basin Design

Hydraulic calculations are based on the methods in the Hydraulic Design of Highway Culverts, Hydraulic Design Series 5, from the Federal Highway Administration, September 1985. See Appendix A for information on how to obtain a copy.

This manual discusses how to use the software, and the assumptions and equations used to perform the calculations. More detailed information on assumptions and equations are contained in a series of Appendices.

This software user manual is not a culvert design manual. The software is intended to provide assistance with the hydraulic design of culverts. Contact your appropriate city, county or IDOT agency to obtain detailed information on culvert design requirements and methods.

For version 1 of the software there were two versions: one using U.S. units and one using S.I. units. Generally, designs are done using one set of units or the other, but not both. You can install both programs (U.S. Units and S.I. Units). They are installed as separate pieces of software. This manual uses the U.S. units version of the software as the basis for discussion.

However, both versions function the same and this manual serves as the user manual for both versions. Only the units are different, and the units required are prominently displayed. For version 2.0 of the software only a version using U.S. Units in available.

Version 3.0 of the software uses only U.S. Units.

Iowa DOT Culvert Program

Version 3.0
Software Users Manual
2016

Acknowledgements

The Iowa Highway Research Board and the Iowa Department of Transportation funded the development of version 1.0 of this software through Research Project TR-447, "A Computer Program for the Hydraulic Design of Culverts".

Version 2.0 was funded by the Iowa Highway Research Board and the Iowa Department of Transportation through Research Project TR-504, "Extensions to the Iowa Culvert Hydraulics Software – The Design of Energy Dissipators".

Version 3.0 was funded by the Iowa Highway Research Board and the Iowa Department of Transportation through Research Project TR-655, "Updating the Iowa Culvert Hydraulics and Iowa Bridge Backwater Software".

Dave Claman of the Iowa DOT Office of Bridge & Structures served as the project manager. The project manager for Digital Control, Inc. was LaDon Jones.

The opinions, findings, and conclusions expressed in this publication are those of the author and not necessarily those of the Iowa Department of Transportation.

Disclaimer:

Although the Iowa Culvert Hydraulics (Iowa DOT Culvert Program) software and user's manual have been carefully prepared and tested, the Iowa Department of Transportation and Digital Control, Inc. makes no representation or warranty regarding the accuracy, correctness, or completeness of the computer program or of the information contained in the user's manual. The Iowa Department of Transportation and Digital Control, Inc. shall not be liable for any direct, indirect, consequential, or incidental damages resulting from the use of the software or the information contained herein.

Site Identification

Click “Site” on the main menu, then “Identification”, to activate the “Site Identification” form.

Enter the information, as needed, in the text boxes on the form.

Three of the entries in this form will appear on all printouts from the software. If an entry exists for “File Number” the information shown at the top of each printout is:

County
File Number
Structure Location (Station)

If an entry does not exist for “File Number” the information shown at the top of each printout is:

County
Project Number
Structure Location (Station)

The information is printed at the top of each printout to help ensure that the printouts can be associated with the correct project.

When you start a new design project you should fill in the Site Identification information first.

Use the “Print” button to print a copy of the Site Identification information.

Design-Q’s

The Iowa Runoff Chart

Click “Design-Q’s” at the top of the main form, then “Iowa Runoff Chart” to display the “Iowa Runoff Chart” form. Generally, the Iowa Runoff chart is used if the drainage area contributing to the culvert inlet is less than two square miles (1280 acres).

For more details on the Iowa Runoff Chart see Appendix C.

Enter the “Drainage Area”, in acres, contributing to the culvert inlet. Again the Iowa Runoff Chart should only be used for drainage areas of less than about 1280 acres (2 square miles). In fact, the software limits the maximum Drainage Area value for which Q’s will be computed to 1280 acres.

There are two options for determining the Land Factor (LF). You can select previously defined descriptions for Land Use and Slope, for which the LF factor has been specified, or you can enter your own LF factor.

To use a specified LF factor select a "Land Use" and "Slope" from the drop-down menus (See Appendix C for descriptions of Land Use and Slope). The LF factor is automatically set by the software based on the Land Use and Slope. This would be the usual procedure.

To enter your own LF factor click the "Specify" option button. This will enable two text boxes where you can enter a description for the Land Use and Slope and type in an LF value. The LF value must be greater than 0 and ≤ 1.

After entering the drainage area and selecting a land use and slope (or entering an LF value) click the "Compute Q's" button. This will compute the estimated runoff (Q) for the return periods shown in the table. The "Chart Q" is the Q from the Iowa Runoff Chart (Appendix C). The "Chart Q" is not a design flowrate. The design Q's are shown in the table for the range of return periods defined for the Iowa Runoff Chart.

The Frequency Factors (FF) shown in the table are adjustment factors associated with the return periods (see Appendix C).

You can copy a value or values from the table. To copy values, select the values you want to copy in the table, then right click and select "Copy".

Design-Q Table

If you are not using the Iowa Runoff Chart, for version 3 of the software you determine your Design Q's using methods not included in the software, then enter your design Q's into the software. The values entered in the Design Q Table can be copied to other parts of the software (General Culver Design) using the "Copy Q's" button on that form.

Click the "Design-Q's" menu item at the top of the main form, then select "Design Q Table" in the dropdown. If you have not opened the example problem, you will see the following.

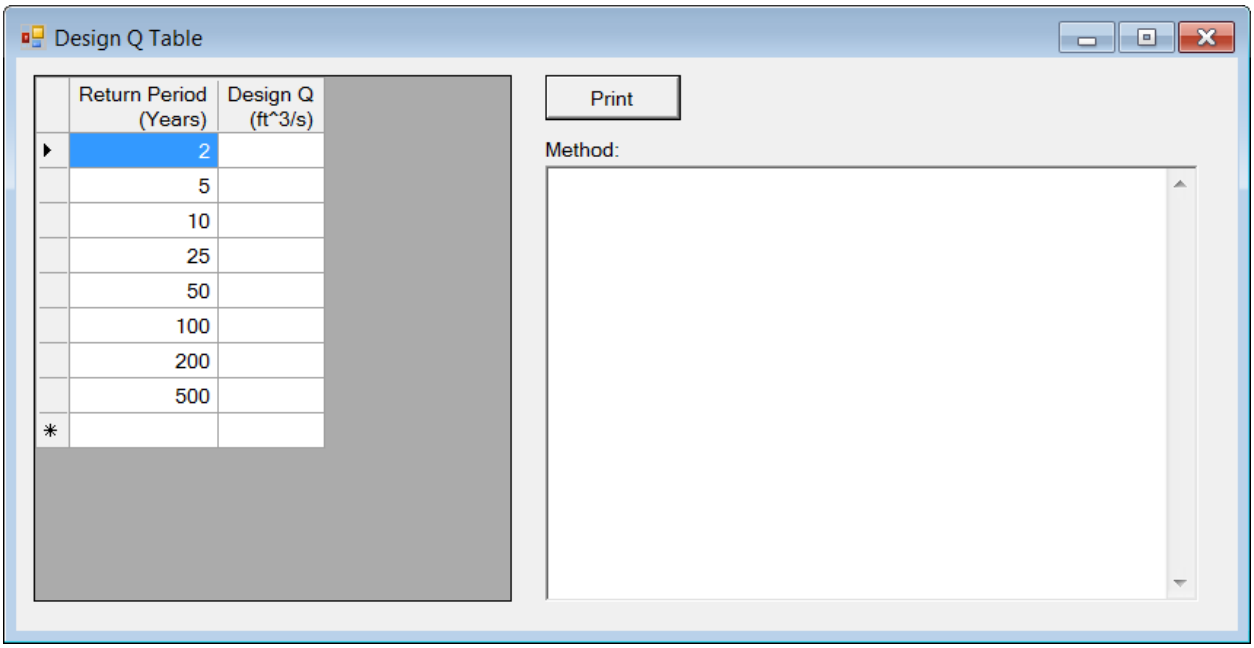

By default, the Return Periods shown are already entered to save you some typing. To enter the appropriate Design Q simply click the cell in the Design Q column and type in the value.

To enter new values, use the cell with the "*" at the left of the row.

To delete existing rows, select the rows you wish to delete and press the Delete key.

If you right click on the header row an editing menu will be displayed with Copy, Paste and Insert Rows, as shown below.

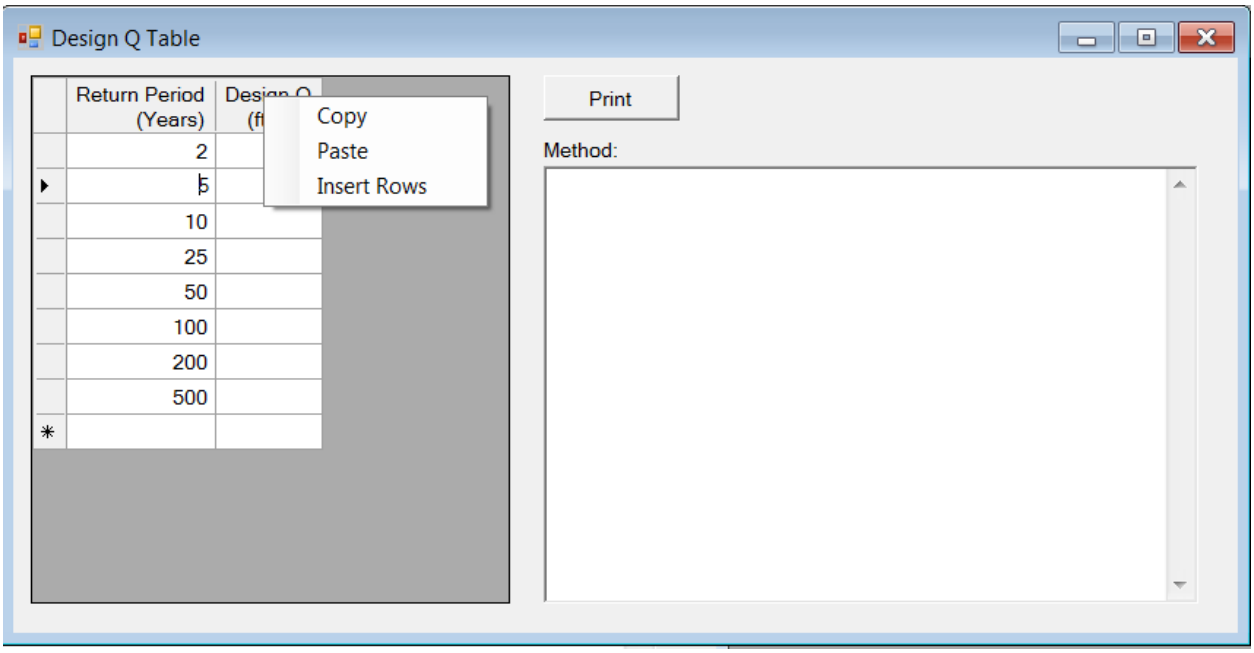

Copy will copy the selected rows from the Design Q table to the Clipboard.

Paste will paste values from the Clipboard into the table. You can, for example, copy values to the Clipboard using Excel, then Paste them into the table using this command.

Insert Rows will bring up a dialog box where you can enter the number of empty rows to insert above the currently selected row.

Tailwater

The tailwater sections of the software provide forms that can be used to estimate stage-discharge information based on channel cross-section and slope. This is typically used to estimate the tailwater depth at the culvert outlet due to the hydraulic characteristics of the channel downstream of the culvert.

Clicking "**Tailwater**" on the main menu displays the drop-down menu with links to:

Channel Cross-Section
Rating Curve
Q – Depth

Channel Cross-Section

The tailwater sections of the software provide forms that can be used to estimate stage-discharge information based on channel cross-section and slope. This is typically used to estimate the tailwater depth at the culvert outlet from the hydraulic characteristics of the channel downstream of the culvert.

Click "Tailwater", then "Channel Cross-Section" to bring up the "Tailwater: Channel Cross-Section" form. You use this form to enter the data describing the stream channel cross-section.

Channel Slope is the slope of the channel bottom in the direction of flow. Always enter the slope as a positive (>0) value.

Station values must be entered in ascending (increasing) order, although the first station does not need to be zero, and can be negative.

Elevation is the elevation of the channel bottom at the station.

The first station must have a Manning n value. Manning n values apply from the station they are entered at until another Manning n value is entered. Hence, you do not need to enter Manning n values for each station. You need to enter a Manning n for the first station, and then at each station where there is a change in Manning n value.

<u>Pop Up Edit Menu</u>

If you click the right mouse button in the table a pop up edit menu will be display which allows you to Copy, Paste, Insert Rows or Clear Values in Selected Cells. You first need to select the

area or row(s) in the grid you wish to perform the action on, then click the right mouse button and select the desired action. To select cells, you press and hold down the left mouse button and drag the mouse over the area you wish to select, then release the mouse button. If you need to delete data from the grid, select the information you wish to delete, then press the Delete (Del) key on your keyboard.

You can also use the keyboard to copy and/or paste data to the grid. To copy data, select the data you wish to copy and press Ctrl-C. To paste data to the grid, select the area you want to paste the data to and press Ctrl-V (or use the pop up menu).

See Appendix B for more information on copying and pasting.

Sort

The "Sort" button will sort the cross-section points, by Station value, from the lowest (smallest) to highest (largest) value. The main value of this button is if you need to add additional data. For example, if you accidentally left out a station or need to add an additional station, simply add the information to the end of the information in the grid, then click the "Sort" button. You can also right click on the grid and select Insert Rows to insert rows where you want to place the new values.

Over Bank Stations

"Left Over Bank Station" and "Right Over Bank Station" affect the computations of flow area to the left (Left Over Bank Station) and right (Right Over Bank Station) of the Over Bank Stations. You are not required to enter over bank stations.

The effect of entering an Over Bank Station is illustrated below. If a left overbank station is entered then areas to the left of the station (smaller station value) are not included in the flow area until the water surface elevation is above the elevation at the over bank station. This is illustrated in the "With Left Over Bank Station" figure. If there is not a left over bank station then the flow area will be included whenever the water surface elevation is above the channel bottom, as illustrated by "With No Left Over Bank Station".

When the water surface elevation is above a high point then all the flow area is included, regardless of whether or not there is an over bank station, as illustrated in the "Elevation above over bank" figure below.

If a right over bank station is entered, then the area(s) to the right (higher station) of the right over bank station are not included in the flow area until the water surface elevation exceeds the elevation at the right over bank station.

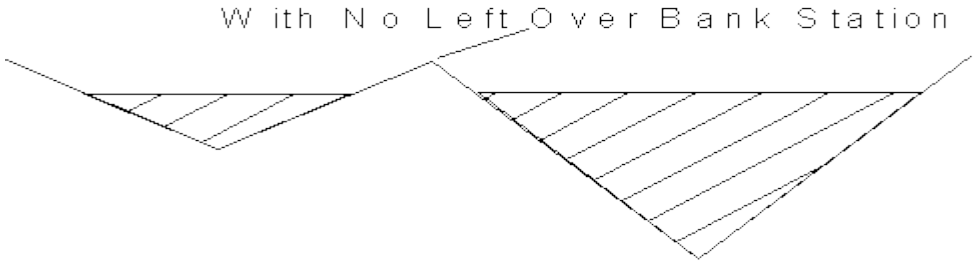
With No Left Over Bank Station

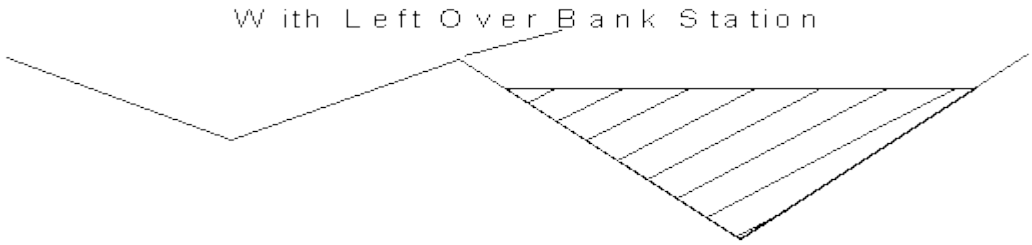
With Left Over Bank Station

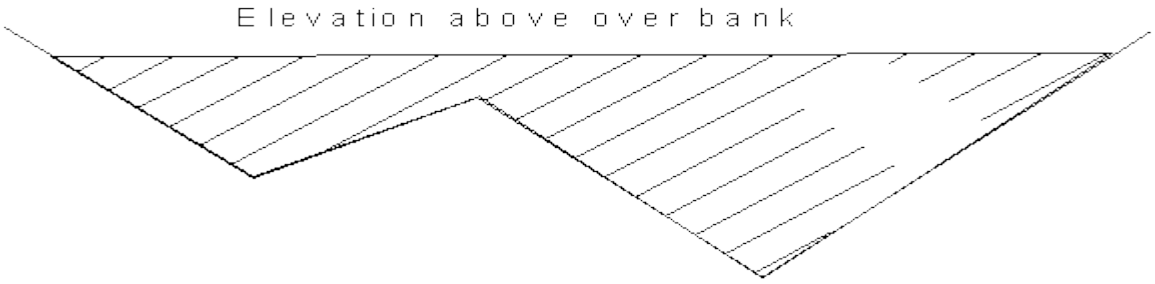
Elevation above over bank

Print the Cross-Section Data

To print the cross-section data table, click on “Print the Table”.

Plotting the Cross-Section

To plot the cross-section click the “Plot” button. The Manning n values and their range of coverage are shown at the top of the plot. The channel bottom is shown with a red line. If you have entered Over Bank Stations their locations are shown with a blue line, with a label of LOB for Left Over Bank and ROB for Right Over Bank.

Printing the Cross Section: To send a copy of the cross-section to the printer click the “Print the Plot” button. You need to “Plot” the Cross-Section before you can print it.

Rating Curve

Click “Tailwater”, then “Rating Curve” to bring up the “Tailwater Rating Curve” form. You can use this form to generate a table and plot of flowrate versus water surface elevation (and depth). The computations use the channel slope and channel cross-section information you have entered in the “Tailwater: Channel Cross-Section” form.

The only information you need to enter in this form is the “Step Size”. The flowrates are computed for elevations from the lowest elevation in the channel cross-section (depth = 0) to the lowest bank elevation. To determine the lowest bank elevation the software compares the elevation values at the first station and the last station. The flowrate is computed starting with the lowest channel elevation and the elevation is incremented by the step size, with computations continued until the lowest bank elevation is reached.

For example, if you enter a step size of 1 foot the flowrate (Q) will be computed at one-foot elevation increments of the water surface, starting with the lowest channel elevation.

After entering a step size click the “Compute/Plot Rating Curve” button. This will fill the table with the results of the computations and also plot flowrate (Q) versus water surface elevation and water surface depth.

You can send a copy of the table to the printer using the “Print the Table” button, and print a copy of the plot using the “Print the Plot” button.

To copy values from the table to the clipboard, select the values you want to copy, click the right mouse button and select “Copy” from the pop up menu.

You can also “Export” the values in the table to a comma delimited text file, using the “Export” button. This file can be opened in a text editor or imported into Excel.

The computations use the Manning Equation,

$$Q = \frac{1.49AR^{2/3}S^{1/2}}{n}$$

where n is the Manning coefficient, A is the cross-sectional area of flow, R is the hydraulic radius and S is the slope of the energy grade line. The slope of the energy grade line (S) is assumed equal to the channel slope (the value you enter for channel slope in the Tailwater: Channel Cross-Section form).

The Manning Equation can be written as,

$$Q = KS^{1/2}$$

where K is the conveyance,

$$K = \frac{1.49AR^{2/3}}{n}$$

<u>The rating curve table shows:</u>

Elevation: Elevation of the water surface.

Depth: Depth of the water surface. The depth is relative to the lowest elevation in the channel cross-section. The depth at the lowest elevation of the channel cross-section is assumed to be zero.

Q: The flowrate or discharge, computed using the Manning Equation.

Velocity: The average velocity, computed from the discharge (Q) divided by the cross-sectional area of flow (Area).

Area: The cross-sectional area of flow at the given water surface elevation (accounting for Left Over Bank and Right Over Bank stations, if entered).

Conveyance: The conveyance at the given water surface elevation, which can be found from Q divided by $S^{0.5}$.

Appendix D contains additional information on tailwater computations.

Q-Depth

Click “Tailwater”, “Q-Depth” to bring up the “Tailwater: Q-Depth” form. You can use this form to compute water surface elevations for given flowrates.

All computations use the channel cross-section and channel slope information you have entered in the “Tailwater: Channel Cross-Section” form. The Manning equation is used, with the assumption that the slope of the energy grade line is equal to the slope of the channel bottom.

Calculator Pad

The grid is a “calculator” pad you can use as needed.

For example, if you enter Q values in the “Q” column, set the option to “Given Q, Find Depth and Elevation”, then click “Compute”, the software will compute the water surface depth and elevation for the Q’s in the “Q” column, and display the computed Depths and Elevations in the appropriate columns.

If the option is set to “Given Depth, Find Q and Elevation”, when “Compute” is clicked the Depth values will be read from the table, and the computed Q’s and Elevation’s for the given Depths will be displayed in the table.

If the option is set to “Given Elevation, Find Q and Depth”, , when “Compute” is clicked the Elevation values will be read from the table, and the computed Q’s and Depths for the given Elevations will be displayed in the table.

Culvert Design

The Culvert design sections of the software consist of 4 forms for design:

IDOT Standard Design
Tapered Inlet Design
Drop Inlet Design
General Design

These forms are accessed through the “Culvert” item in the main menu at the top of the form.

IDOT Standard Design

Click “Culvert”, then “IDOT Standard Design” to display the “IA DOT Standard Designs” form. This form is used for hydraulic design of culverts, using IDOT standard design methods.

You need to input the design flowrate (Q) and the lower (H-Min.) and upper bound (H-Max.) for H. H is a design criteria used by the Iowa DOT. H is the height of the headwater above the top of the culvert at the inlet, as illustrated in the following figures.

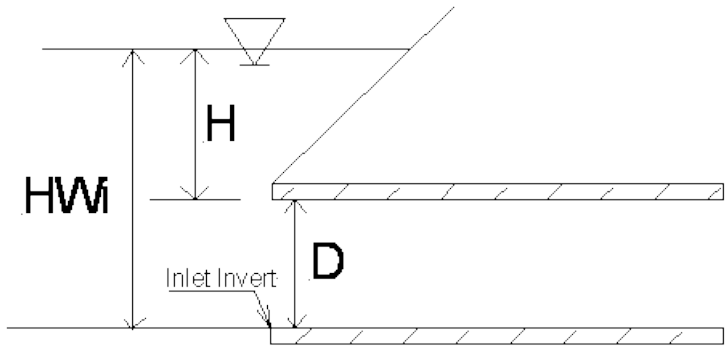

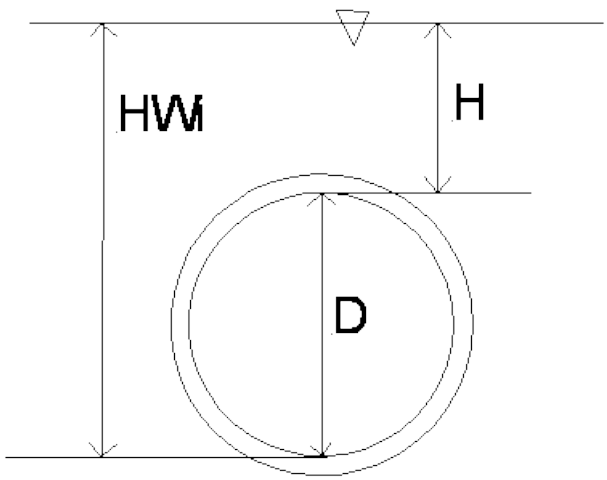

Given the value you have input for Q and for the allowable range of H, the software will compute the value of H for all standard size culverts, and display the culverts that meet the H range criteria.

By default the software will assume only single barrels. If you wish the software to display the multiple barrel culverts that meet the H criteria, click on the check box just to the left of “Include Multiple Barrels”. If the box is not checked, only single barrels are evaluated.

<u>Standard Culverts:</u>

The culvert types and sizes evaluated are IDOT “standard culverts”. Appendix L lists the IDOT standard sizes.

The standard culvert types included in the software are:

Concrete Pipe
Corrugated Metal Pipe
Reinforced Concrete Box
Concrete Pipe Arch
Steel Pipe Arch (2-2/3" by ½" corrugations)
Steel Pipe Arch (3" by 1" or 5" by 1" corrugations)

Inlet Control

The IDOT standard design method is based on evaluating the headwater assuming inlet control only. That is, in the "IA DOT Standard Designs" form the H value is computed assuming inlet control. If you wish to check the outlet control headwater elevation for a selected design you can use the General Design form, discussed later.

The inlet configurations assumed for IA DOT Standard Designs are:

Culvert Type	Inlet Edge Description	Chart No.	Nomograph Scale
Concrete Box	18° to 33.7° wingwall flare, d=0.083D	9	2
Concrete Pipe	Square edge with headwall	1	1
Concrete Pipe Arch	Square edge with headwall	1	1
Metal Pipe	Headwall	2	1
Steel Pipe Arch	90° headwall	34	1

The descriptions, chart numbers and Nomograph scales are from HDS-5. The details for inlet control, taken from HDS-5, are shown in Appendix I.

Selected Design

Usually a number of possible solutions (culvert type and size) meet the design criteria. You can identify a culvert type and size as your design using the "Selected Design" column in the tables. If you click on a row in the "Selected Design" column the row toggle the check symbol in the column. You can have one selected design for the form.

When you print the IA DOT Standard Designs results the selected design(s), will be indicated on the printout with ">>>" in the column.

To send a copy of the results to the printer click the "Print" button on the form.

Tapered Inlet Design

Click “Culvert”, then “Tapered Inlet Design”. This will bring up the “Tapered Inlet Design” form. Under inlet control the barrel can convey more flow than the inlet will accept. This principle can be used to reduce the size of the barrel.

See Appendix E for a discussion of when Tapered Inlets might be used and the equations and assumptions used to perform the calculations. Appendix F discusses how the software performs the calculations.

Tapered inlet designs are computed for box culverts only. Inlet control is assumed, and the following inlet type is assumed,

The inlet configuration assumed for Tapered Inlet Design is:

Culvert Type	Inlet Edge Description	Chart No.	Nomograph Scale
Concrete Box	18° to 33.7° wingwall flare, d=0.083D	9	2

To use an example to illustrate the results, enter the following values:

Q (ft^3/s): 1000
H-Max (ft): 2
H-Min (ft): 0

Check the box to the left of “Include Multiple Barrels” to display feasible multiple barrel solutions.

Click the “Compute” button. The software shows all the solutions that meet the H criteria for the given Q.

The columns in the table are:

Number of Barrels: Number of barrels in the solution. The inlet and barrel section are assumed to have the same number of barrels.

Inlet Width, Inlet Height: The width and height of the culvert inlet.

Inlet H: The height of the headwater at the inlet, measured relative to the top of the inlet (See IDOT Standard Design for an illustration of H).

Barrel Width, Barrel Height: The width and height of the culvert barrel.

Minimum Z and Minimum L: The minimum drop and length between the culvert inlet and culvert barrel. That is the Minimum Z and Minimum L for the taper between the inlet and the barrel. See Appendix E for an illustration.

Barrel Depth (ft): The depth of flow expected in the barrel. The barrel depth is the normal depth for the barrel, assuming the barrel slope is equal to the minimum barrel slope. The barrel depth is by default set equal to 90% of the barrel height. However, if this depth exceeds 95% of critical

depth for the barrel, then the barrel depth is set equal to 95% of critical depth in order to maintain super-critical flow in the barrel.

Minimum Barrel Slope: The minimum required barrel slope in order to have super-critical flow in the barrel. A steeper slope can be used. At the minimum barrel slope the barrel depth is normal depth.

Selected Design: You can click a row in the "Selected Design" column to identify one of solutions as your selected design. The selected design is also highlighted on the Tapered Inlet Design printout.

For the example problem ten possible solutions are shown. For example, you can use a 10 by 10 inlet with an 8 x 10 barrel.

Note that in some cases an inlet may have more than one possible barrel. For the example problem a 12 foot wide by 8 foot high barrel can be used with either an 8 foot wide by 8 foot high barrel or a 10 foot wide by 8 foot high barrel.

The example also shows that a twin 10 foot wide by 6 foot high inlet can be used with twin 8 foot wide by 6 foot high barrels.

Computational Procedure

The software computes the feasible solutions using the following procedures;

Possible Inlets: The inlets that meet the H criteria for the given Q are determined, using inlet control computations (Appendix I). The inlets tested are IA DOT standard size single and twin concrete box culverts (Appendix L).

Possible Barrels: For each possible inlet potentially feasible barrels are determined. For a barrel size to be potentially feasible it must have the same height as the inlet and a width that is smaller than the inlet width. Also, the barrel width must be at least 50% of the inlet width for single boxes, and at least 60% of the inlet width for twin boxes.

For each possible inlet-barrel combination, the minimum Z-L that produces a depth at the barrel inlet that does not exceed 90% of the barrel height is determined.

The Z-L combinations tested for single boxes are:

Z (ft)	L(ft)
3	10
4	12
5	15

The Z-L combinations test for twin boxes are:

Z (ft)	L(ft)
3	15

4	20
5	25

For twin boxes, if L = 4(B1-B2) is greater than the L value in the table, the computed L is used. B1 is the inlet width (one box of the twin box) and B2 is the barrel width (one box of the twin box). See Appendix E for more information.

All possible combinations may not be feasible with the Z-L combinations tested. For the example problem a 6 x 8 barrel is possible with a 12 x 8 inlet, but it is not feasible for the maximum Z value (5 feet). A Z of more than 5 feet would be required to use a 6 x 8 barrel with the 12 x 8 inlet.

Drop Inlet Design

Select “Culvert”, then “Drop Inlet Design” to show the “Drop Inlet Design” form.

Drop inlets for pipe and box culverts can be beneficial solutions to some drainage and erosion problems. Hydraulically they are useful when a culvert has limited available head upstream. Also, they can be used to raise the flowline to create a pond or stop channel erosion upstream. Appendix G contains additional information on drop inlet design.

An illustration of a drop inlet is show below.

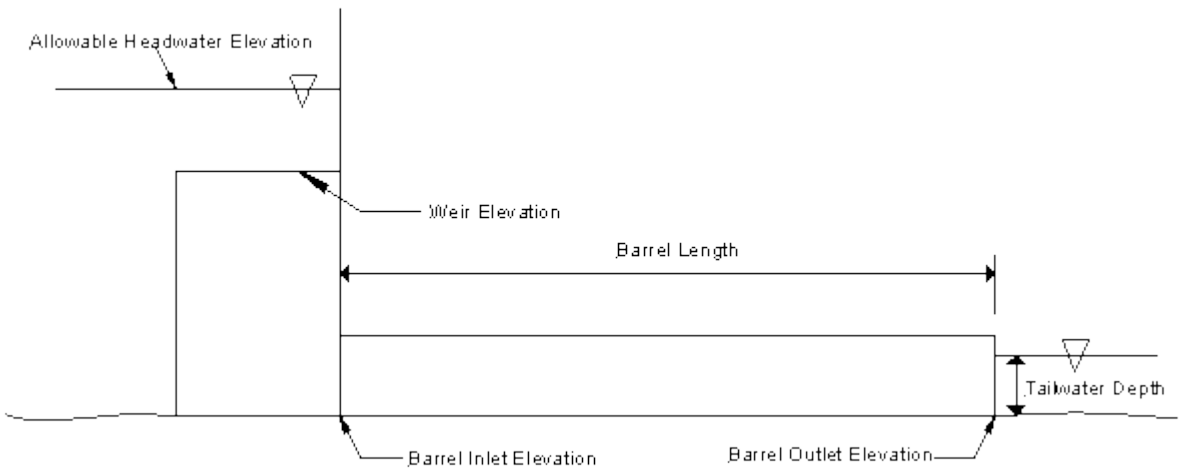

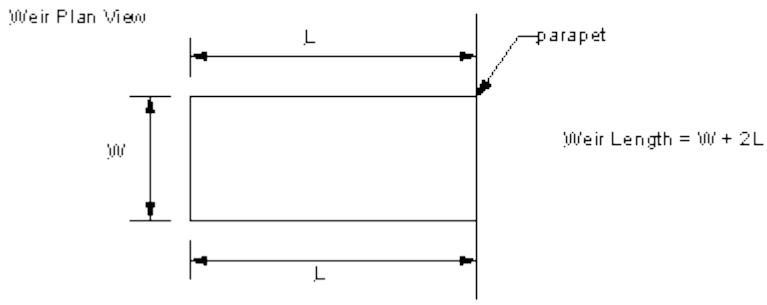

DROP INLET

Drop inlet design is based on sizing two elements, the barrel and the weir. The barrel is sized such that the headwater elevation due to the barrel hydraulics does not exceed the allowable headwater elevation. The weir is sized such that the headwater elevation due to the weir hydraulics does not exceed the allowable headwater elevation.

Design Parameters

The design parameters you need to enter for drop inlet design are illustrated in the previous figure. You need to enter the (illustrated above):

Design Q
Allowable Headwater Elevation
Weir Elevation
Barrel Inlet Elevation
Barrel Outlet Elevation
Barrel Length
Tailwater Depth (note that this is tailwater depth, not elevation)

After you have entered the design parameters, click “Compute Barrels” to display the feasible barrels.

Barrel Sizing:

The barrel is sized so the headwater elevation due to the barrel hydraulics does not exceed the allowable headwater elevation. Two barrel types are considered; Concrete Box and Concrete Pipe. Multiple barrels can be evaluated for Concrete Box ("Include Multiple Barrels (RCB)"), while only single barrels are evaluated for Concrete Pipe.

The assumed inlet condition for Concrete Box is:

Culvert Type	Inlet Edge Description	Chart No.	Nomograph Scale
Concrete Box	18° to 33.7° wingwall flare, d=0.083D	9	2

The assumed inlet condition for Concrete Pipe is:

Culvert Type	Inlet Edge Description	Chart No.	Nomograph Scale
Concrete Pipe	Square edge with headwall	1	1

The columns for the barrel computations are:

The columns for the barrel computations are:

Headwater Elevation: The headwater elevation is the headwater at the inlet, due to the barrel hydraulics. The headwater is found for inlet control and outlet control, and the maximum is displayed. Inlet control calculations follow the procedures from HDS-5 (Appendix I). Outlet control computations also follow the procedures from HDS-5. For outlet control, inlet losses are assumed to be a combination of entrance losses and bend losses, with a combined coefficient of 1.0 (Appendix G and J).

Head Loss: Head loss is the head loss computed for outlet control, using HDS-5 methods. It includes inlet losses, barrel friction losses and exit losses. See Appendix G, Appendix J or HDS-5.

Weir Width: Weir Width is the width of the weir assumed for the culvert barrel. It is simply assumed to be equal to the width of the culvert barrel (or twice the width of the culvert barrel for twin barrels).

Weir Length: Using the assumed weir width, the weir length is the minimum length of weir required in order for the weir to meet the allowable headwater elevation, based on the weir elevation. The effective weir length is assumed to be,

$$L_w = W + 2L$$

where L_w is the total effective weir length, W is the width of the weir and L is the length of the weir. The weir is assumed to have a head wall or parapet, so only three sides are used in computing the total weir length (see previous Figure or Appendix G).

Barrel Sizes Evaluated

For concrete boxes the barrel sizes evaluated are standard IDOT sizes for single and twin barrels. For concrete pipes the barrel sizes evaluated are standard IDOT sizes, single barrels only. See Appendix N for a list of standard sizes.

For each size evaluated the headwater elevation, due to the barrel hydraulics, is computed. The culvert size is included in the barrel table if,

The headwater elevation does not exceed the allowable headwater elevation, and
The headwater depth above the inlet invert is at least 75% of the barrel height.

The lower limit on headwater elevation (75% of barrel height) is included for two reasons. The first is to not include in the tables sizes that are not likely to be of interest. The second is that the HDS-5 approximate method is being used for outlet control computations, and HDS-5 notes that adequate results are obtained down to a headwater of 0.75D, where D is the height of the culvert barrel. Below a depth of 0.75D the approximate method may be not accurate.

Selected Design

You can designate a selected design(s) by clicking the row for your selected design(s) in the "Selected Design" column. Selected design(s) will be identified by ">>>" in the printout for drop inlet design.

Total Weir Length

When you click the "Compute Barrels" button the total length of weir required to meet the allowable headwater elevation is computed and displayed as "Total Weir Length". The "Total Weir Length" is the minimum length of weir required to meet the allowable headwater elevation. The weir length is computed from,

$$L_w = \frac{Q}{CH^{1.5}}$$

where L_w is the total linear weir length required to meet the allowable headwater elevation, given the design Q and Weir elevation. C is the weir coefficient (3.09, English units) and H is the height of the water surface about the weir elevation. H is set equal to the difference between the allowable headwater elevation and the weir elevation,

H = Allowable Headwater Elevation – Weir Elevation

The "Weir Length" Columns in the RCB and RCP barrel grids are computed using the "Total Weir Length" value shown.

Assuming there are three effective sides (see the previous Figure or Appendix G) and the weir is rectangular, it is assumed that,

$$W + 2L = L_w$$

Where W is the width of the weir and L is the length of the weir.

Solving for L,

$$L = \frac{L_w - W}{2}$$

The computed L is shown in the "Weir Length" column for the barrels.

Rectangular Weir Calculations

In the tables showing the barrel results it is assumed the weir width is equal to the width of the barrel(s). It may be that you want to determine the length of weir required when the weir width is not equal to the barrel width.

The "Rectangular Weir Calculations" contains a calculator grid that you can use to determine the dimensions required for the weir. Use of the weir calculator grid is optional. The Weir calculator grid assumes a rectangular weir, with three effective sides (see the previous Figure or Appendix G).

There are 3 computation options.

Option 1: Input Width and Length, Compute Headwater Elevation

This option computes the headwater elevation, given the weir width and length. Perhaps you have picked a weir width of 6 feet and the minimum required length of weir is 9.67 feet. However, you decide to use a weir with a width of 6 feet and a length of 10 feet. You can use this option to estimate the headwater elevation due to the weir.

If you select this option, you need to enter a weir width and length, and the headwater due to the weir will be computed when you click "Do Weir Computations".

The computations done for this option are,

$$L_w = W + 2L$$

L_w is the total effective length of weir, W is the width of the weir (entered by you) and L is the length (entered by you).

$$H = \left(\frac{Q}{C L_w}\right)^{\frac{1}{1.5}}$$

Headwater Elevation = Weir Elevation + H

Option 2: Input Width(s), Compute Minimum Weir Length(s)

If you use a weir width that is the same as the width of the barrel(s), this option will give you the same results as the weir length shown in the tables for the barrels.

You can use this option to compute the minimum length of weir required (assuming a rectangular weir) to meet the allowable headwater elevations. For example, suppose you are using a single 6-foot wide box culvert, but the weir width will be 8 feet.

To use this option, click the option button, entered your desired width, then click "Do Weir Computations".

The computations for this option are,

H = Allowable Headwater Elevation – Weir Elevation

$$L_w = \frac{Q}{CH^{1.5}}$$

$$L = \frac{L_w - W}{2}$$

Option 3: Input Length(s), Compute Minimum Weir Width(s)

This option is the same as option 2, except you input a length, and the width of weir required to meet the allowable headwater elevation is determined.

The computations for this option are,

H = Allowable Headwater Elevation – Weir Elevation

$$L_w = \frac{Q}{CH^{1.5}}$$

$$W = L_w - 2L$$

<u>Minimum Total Weir Length</u>

When you click "Do Weir Computations", the minimum weir length required is computed from,

$$L_w = \frac{Q}{CH^{1.5}}$$

and shown as “Minimum Total Weir Length (ft)”. When you click “Do Weir Computations” the current values of Q, Allowable Headwater Elevation and Weir Elevation shown in Design Parameters are used, with

H = Allowable Headwater Elevation – Weir Elevation

This value is shown as a data check. If the barrel results and the weir results have been computed using the same Q, Allowable Headwater Elevation and Weir Elevation, then the “Total Weir Length” shown for the Barrels frame will equal the “Minimum Total Weir Length” shown for the Rectangular Weir Calculations. If they do not match this means the values for Q, Allowable Headwater Elevation or Weir Elevation used for “ Barrels” and “Do Weir Calculations” do not match. This can happen, for example, if you changed the Weir elevation, clicked “Do Weir Calculations” but did not click “Compute Barrels”.

Generally, if you change a design parameter you should click both “Compute Barrels” and “Do Weir Calculations”. However, “Do Weir Calculations” is only affected by changes in Q, Allowable Headwater Elevation or Weir Elevation, whereas the barrel computations are affected by all the parameters.

Non-rectangular Weir

If you are using a non-rectangular weir you can still use the “Total Weir Length” to size your weir, but you will need to account for the geometry of the weir.

Selected Design

If you wish to identify a particular result in the “Weir” calculator as your design(s) click the row for your selection(s) in the “Selected Design” column. The selected design(s) will be identified in the Drop Inlet Design print out by “>>>”.

To print out a copy of the results click the “Print” button.

General Design

Click “Culvert”, then “General Design” to go to the “General Culvert Design” form.

This form will compute the headwater elevation for a particular culvert size and inlet type, under inlet and outlet control, for a range of Q values.

Design Qs and Tailwater Depth

The grid in the upper left in the “Design Q’s” frame is used to specify design Q’s and Tailwater Depths. You have several options for entering the data.

Manual:

You can enter the values manually by typing them directly into the grid. The required values are "Design Q" and "TW Depth". "TW Depth" is the depth of the tailwater above the culvert outlet invert elevation. If you leave the "TW Depth" blank the tailwater depth is assumed to be 0.

When you click the "Compute" button the culvert hydraulics will be computed for each row that has "Use" selected (checked), using the Q in the "Design Q" column and the tailwater in the "TW Depth" column.

If you have entered a channel cross-section and slope into the software ("Tailwater", "Channel Cross-Section") you can have the software compute the tailwater depth. When you click "Compute Tailwater Depths" the software will use each "Design Q" value to compute a tailwater depth and insert the value into the grid. If you have not entered a channel cross-section you will have to enter the tailwater depths manually.

You are not required to enter a return period in the "Return Period" column, but you should enter a value if you want it to be shown in the results.

To toggle the check in the "Use" column click on a row in the column.

If you are using the Iowa Runoff Chart to estimate your design Q's you can have the results of the Iowa Runoff Chart automatically entered into the grid. When you click "Load Iowa Runoff Chart Q's" the results in the "Iowa Runoff Chart" form are copied from the "Iowa Runoff Chart" form to the "Design Q's" grid.

If you have entered Design Q values in the Design Q Table ("Design Q's", then "Design Q Table" you can have these values copied into the Design Q grid. When you click "Load Design Q Table Q's" the values from the Design Q table will be copied to the "Design Q's" grid. Note that this is simply a copy operation and you need to entered values into the Design Q Table before they can be copied.

Again, if you have input a "Channel Cross-Section" under "Tailwater" the tailwater depths for the values in the "Design Q" column can be computed by clicking "Compute Tailwater Depths".

Culvert Elevations and Length

You need to enter the,

Culvert "Inlet Invert Elevation" (elevation of the inside bottom of the culvert at the inlet).

Culvert "Outlet Invert Elevation" (elevation of the inside bottom of the culvert at the outlet).

Culvert Barrel Length: The length of the culvert barrel. This is the actual length of the culvert barrel, not the horizontal distance from the inlet to the outlet.

Allowable Headwater Elevation: The allowable headwater elevation for your design. This value is optional. However, if you enter an allowable headwater elevation the computed headwater elevation will be compared to the allowable headwater elevation and if the computed headwater

elevation exceeds the allowable headwater elevation this will be identified in the results (shown in red).

The parameters are illustrated in the following figure:

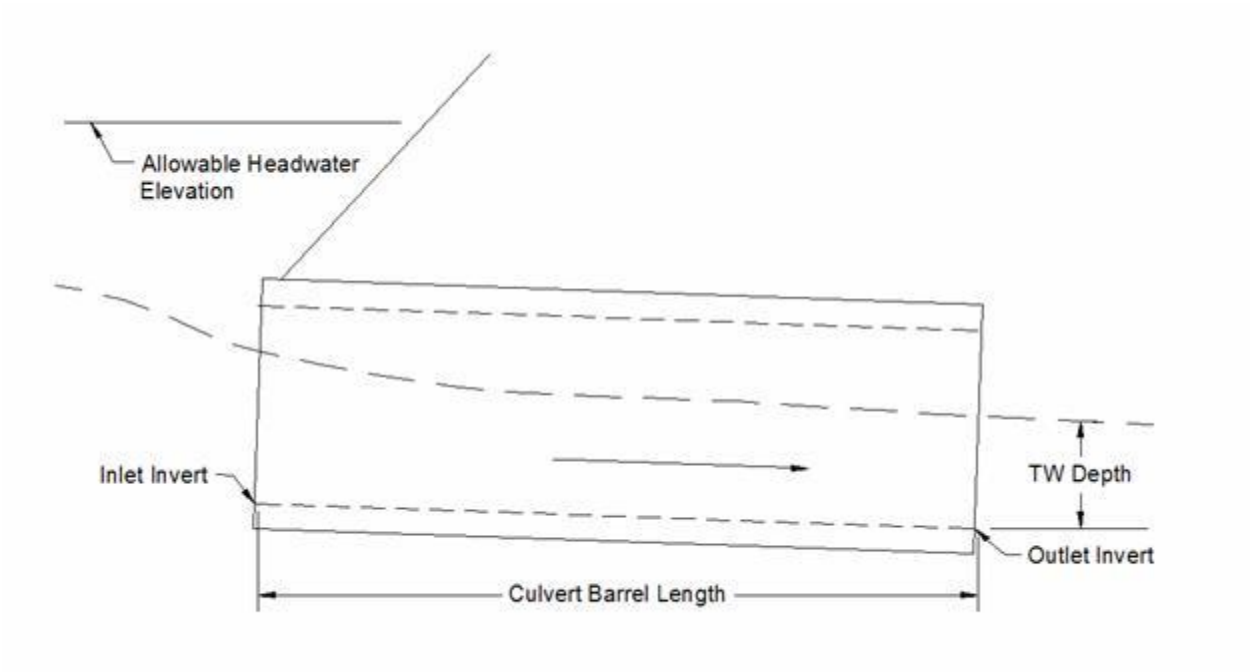

<u>Culvert Type, Inlet and Size</u>

You specify the culvert type using the drop-down list box that contains the culvert types.

Currently, the six types of culverts are,

RCB: Reinforced Concrete Box
RCP: Reinforced Concrete Pipe
CMP: Corrugated Metal Pipe
CPA: Concrete Pipe Arch
SPA: Steel Pipe Arch (2-2/3” by 1/2” corrugations)
SPA: Steel Pipe Arch (3 x 1 or 5 x 1 corrugations)

When you select a culvert type a default “Manning n” value is automatically displayed. You may use the default or type in a “Manning n” value.

<u>Culvert Inlet:</u>

When select a culvert type the “Inlet Type” list box is automatically filled with the inlet types that are currently build into the software for the selected culvert type. For a selected inlet type the default Ke value (entrance loss coefficient) is displayed. You can use the default value or type in a “Ke” value.

Selecting a Size

You can specify the culvert size two ways; select a standard size or type in the dimensions.

Standard Size Selection

When you select a “Culvert Type” the available standard sizes are automatically displayed in the drop-down list box beneath “IDOT Standard Sizes”. You can scroll the list box to select a size and number of barrels.

Entering a Barrel Size

If you wish to enter a size, click the radio button to the left of “Enter Barrel Size”. This will enable text boxes where you can type in the dimension(s) of the culvert barrel and select the number of barrels.

Culvert Hydraulics

When you click “Compute” the software will compute and display the culvert hydraulic results for the current design information. The results will be shown for each “Design Q” value that has “Use” checked. When you click “Compute” the current settings for “Culvert Type”, “Inlet Type”, “Manning n”, “Ke”, Size, etc., are used in the computations.

Important Note: If you change any design values or parameters you will need to click “Compute” to update the results to reflect the current design parameters.

The columns in the “Culvert Hydraulics” grid contain the following information:

Return Period: This is simply a copy of the return period value in the “Design Q’s” table.

Q: The Q value. The discharge or flowrate through the culvert. Read from the “Design Q” column in the “Design Q’s” table.

TW: The tailwater depth. The depth of water at the culvert outlet, above the outlet invert, created by down-stream conditions. Read from the “TW Depth” column in the “Design Q’s” table.

HW Elev.: The headwater elevation at the culvert inlet. This is the larger of the headwater elevations computed assuming inlet control and outlet control. If you have entered an allowable headwater elevation and the computed headwater elevation is above the allowable headwater elevation the value in this column is shown in red.

HW H: The height of the headwater above the top of the culvert, at the inlet. This is the larger of the headwater H values from inlet control and outlet control.

Exit Velocity: An estimate of the velocity in the culvert barrel at the outlet. The exit velocity is estimated for inlet control and outlet control and this is the larger of the two values.

I.C. HW: The inlet control headwater elevation. The headwater elevation at the culvert inlet assuming the culvert is operating under inlet control. Appendix I describes the equations and assumptions for inlet control.

I.C. H: The inlet control headwater H. The height of the headwater above the top of the culvert barrel, at the inlet, assuming the culvert is operating under inlet control.

O.C. HW: The outlet control headwater elevation. The headwater elevation at the culvert inlet assuming the culvert is operating under outlet control. Appendix J describes the equations and assumptions for outlet control.

O.C. H: The outlet control headwater H. The height of the headwater above the top of the culvert barrel, at the inlet, assuming the culvert is operating under outlet control.

Exit Velocity I.C.: An estimate of the velocity in the culvert barrel, at the outlet, assuming the culvert is operating under inlet control. Under inlet control it is assumed the depth in the barrel at the outlet is normal depth. See Appendix K for more information on exit velocity estimation.

Exit Velocity O.C.: An estimate of the velocity in the culvert barrel, at the outlet, assuming the culvert is operating under outlet control. See Appendix K for more information on exit velocity estimation.

Crit. Depth: The critical depth in the barrel, for the given Q, barrel size and barrel geometry. If the computed critical depth is greater than the top of the culvert the critical depth is set equal to the height of the culvert barrel.

Normal Depth: The normal depth for the culvert barrel. Computed using the Manning equation and assuming the slope of the energy grade line is equal to the slope of the culvert barrel.

If the culvert is horizontal or has an adverse slope normal depth is not defined. In this situation the normal depth is shown as “Undefined(1)”.

If the maximum Q that can by conveyed by the culvert under open channel flow conditions is less than the Design Q this is shown as “Undefined(2)” in the normal depth column. In this situation, normal depth does not exist for the Q, or the barrel would be flowing full (pressure flow) at normal depth.

Hydraulic Slope: The hydraulic slope, as defined by steady open channel hydraulics.

Steep: normal depth < critical depth
Mild: normal depth > critical depth
Critical: normal depth = critical depth
Horizontal: Culvert barrel slope is zero. Inlet invert elevation = Outlet invert elevation
Adverse: Culvert barrel elevation increases from inlet to outlet.

Inlet invert elevation < Outlet invert elevation

Undefined: The slope is not horizontal or adverse, and normal depth is not defined.

To send a copy of the results to the printer, click the “Print” button.

Erosion

NE Scour Hole Design

Click “Erosion”, then “NE Scour Hole Design” to activate the “NE Scour Hole Design” form. This form computes the dimensions and riprap size and thickness for erosion control using a method from the Nebraska (NE) Department of Roads.

The Nebraska (NE) scour hole design methodology and the following discussion is taken from the Nebraska Department of Roads, Roadway Design Manual, chapter Five: Erosion and Sedimentation Control, with reference to 5.5.27.1 Scour Hole.

A scour hole is a preformed excavated hole or depression which is lined with riprap of a stable size to prevent scouring. The depression provides both vertical and lateral expansion downstream of the culvert outlet to permit dissipation of excessive energy. A significant reduction in the size of the riprap stone is achieved by the excavation.

Two types of preformed scour holes can be constructed. The first type of scour hole is depressed one-half of the culvert diameter (or span). The second type is depressed the full culvert diameter (or span). The design of preformed scour holes is based upon research conducted by the U.S. Army Corps of Engineers.

The empirical equations developed for the hydraulic design of preformed scour holes are presented in Appendix M. Equations are applicable to both circular and rectangular culverts full or partly full.

To use the form you need to enter the:

Design Q (cfs)

Tailwater Depth (ft):

The tailwater depth at the culvert outlet. Note that this is the depth above the outlet invert.

Culvert Diameter or Span (ft):

For a circular culvert enter the diameter, otherwise enter the culvert span. The span to be entered for multiple barrels is not covered in the Nebraska documentation, but it is

recommended you enter the total maximum span covered by the culverts. For example, for twin 6 foot diameter circular pipes laid side by side, enter a value of 12 feet.

The “Compute TW Depth” button will compute the estimated tailwater depth using the Design Q, the Tailwater Channel Cross-Section and the Manning Equation and insert the computed value as the Tailwater Depth.

Click the “Compute” button to have the design values displayed. The results for 2 situations are shown:

The dimensions and riprap size for a scour hole with a depression of ½ the culvert span, and the dimensions and riprap size for a scour hole with a depression equal to the culvert span.

The dimensions, A, C, E and F, along with the riprap thickness, D, are illustrated on the NE Scour Hole Plot, shown below.

Riprap Size

The “Calculated Riprap Size, D-50, (ft)” is the minimum average stone diameter required for the scour hole. The “Recommended Riprap Size, D-50” is either Class E or Class B. If the “Calculated Riprap Size, D-50, (ft)” is <= 1.2 feet, class E is recommended, otherwise Class B is recommended.

Riprap Thickness

The “Calculated Riprap Thickness, D (ft)” is twice the “Calculated Riprap Size, D-50, (ft)”.

If the recommended riprap size is Class E, the “Recommended Riprap Thickness, D (ft)” is the larger of the calculated riprap size or 2.0 feet. If the recommended riprap size is Class B, the “Recommended Riprap Thickness, D (ft)” is the larger of the calculated riprap size or 3.0 feet.

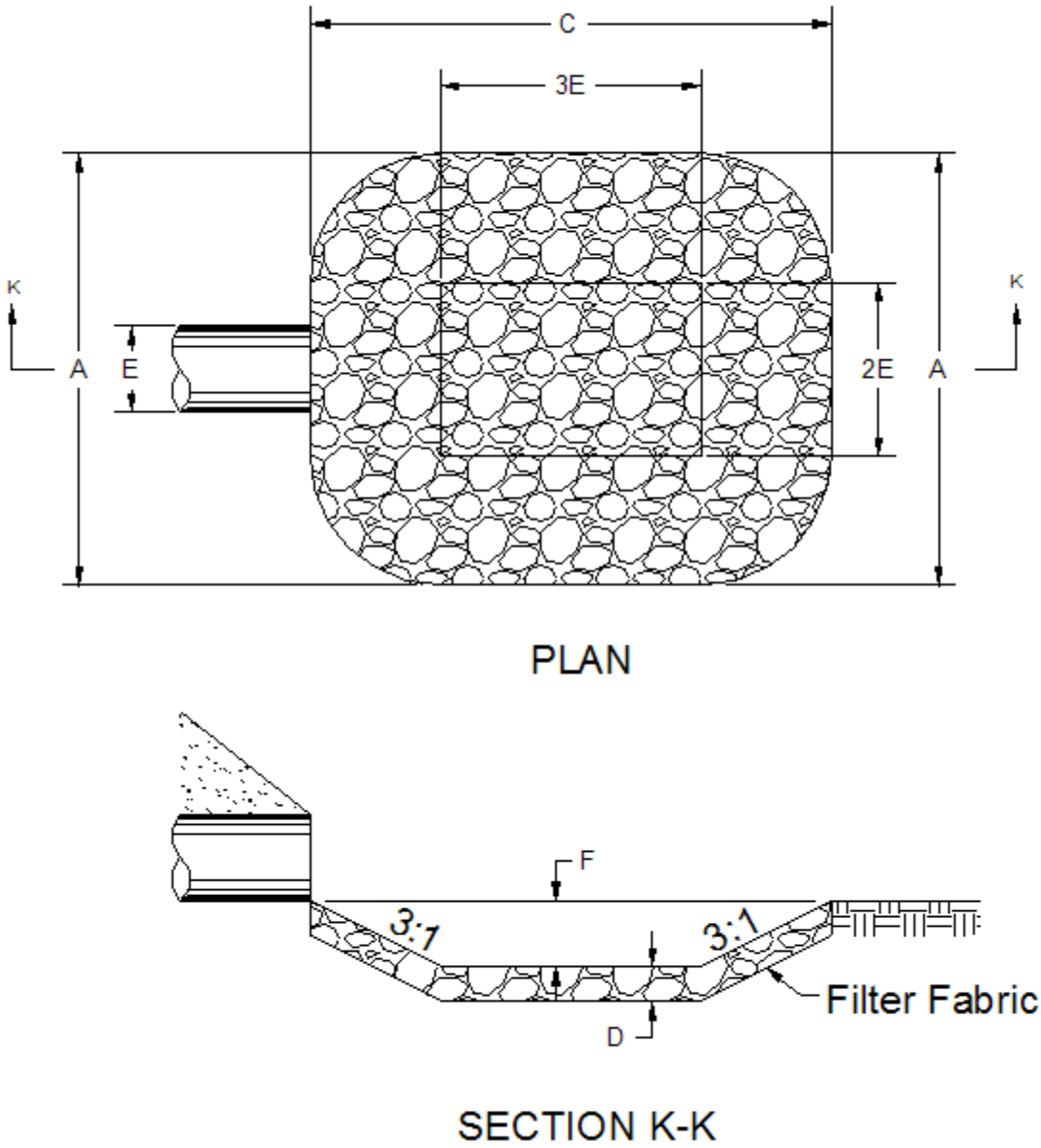

NE SCOUR HOLE DIMENSIONS

NE Plunge Basin Design

Click “Erosion”, then “NE Plunge Basin Design” to activate the “NE Plunge Basin Design” form. This form computes the dimensions and riprap size and thickness for erosion control using a method from the Nebraska (NE) Department of Roads.

The Nebraska (NE) plunge hole design methodology and the following discussion is taken from the Nebraska Department of Roads, Roadway Design Manual, chapter Five: Erosion and Sedimentation Control, with reference to 5.5.27.2 Plunge Basin.

The dimensions and layout of the Plunge Basin are illustrated on the NE Plunge Basin Plot, shown below. The plunge basin should only be used where flows issue from a freely discharging pipe, and the water jet subsequently discharges into the air and then plunges downward into the basin. If the angle of impart is too flat, the jet will ride across the surface of the basin at high velocity causing waves and eddies in the side slopes. Exit velocities will subsequently be high. A deflector bucket is typically constructed at the outlet of the culvert if a plunge basin will be installed downstream.

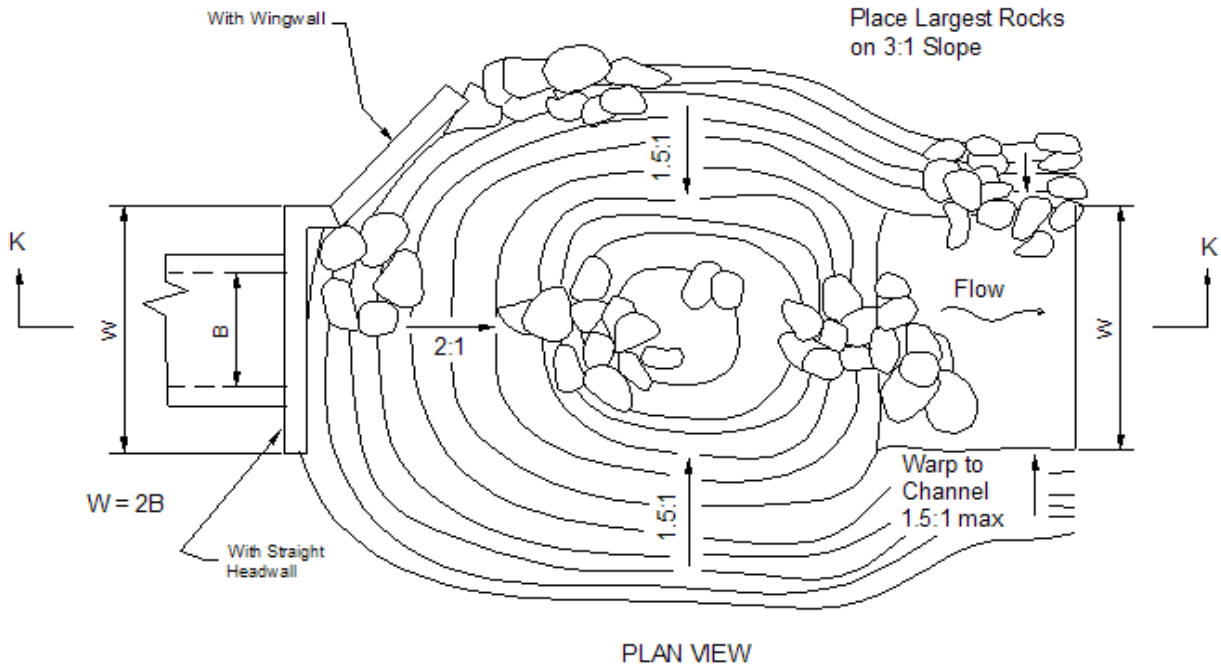

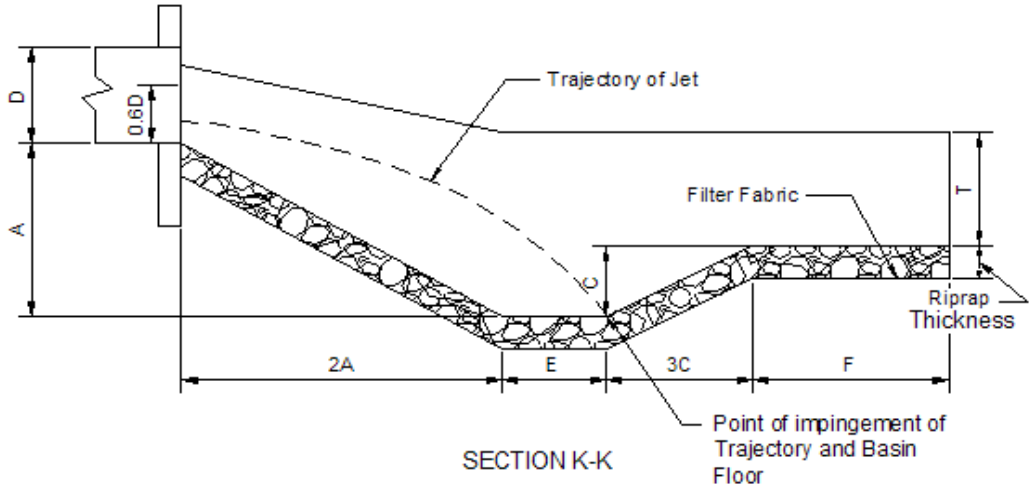

NE PLUNGE BASIN

To have the plunge basin design parameters computed you need to define the culvert type and geometry, the design flowrate (Q) and the tailwater depth. The NE Plunge Basin design depends on the exit velocity, but no methods are defined in the documentation for determining the exit velocity. The methods used here to determine the "Exit Velocity" are the same as those used for General Culvert Design.

Culvert Type, Inlet and Size

The “Culvert Type, Inlet and Size” frame is where you specify the culvert information. You specify the culvert type using the drop-down list box to the right of “Culvert Type”.

Currently, the six types of culverts are,

RCB: Reinforced Concrete Box
RCP: Reinforced Concrete Pipe
CMP: Corrugated Metal Pipe
CPA: Concrete Pipe Arch
SPA: Steel Pipe Arch (2-2/3” by 1/2” corrugations)
SPA: Steel Pipe Arch (3 X 1 or 5 X 1 corrugations)

When you select a culvert type a default “Manning n” value is automatically displayed. You may use the default or type in a “Manning n” value.

Culvert Inlet:

When you select a culvert type the “Inlet Type” list box is automatically filled with the inlet types that are currently built into the software for the selected culvert type. For a selected inlet type the default Ke value (entrance loss coefficient) is displayed. You can use the default value or type in a “Ke” value.

Each culvert type – inlet combination has associated with it the coefficients used for inlet control computations. These coefficients are stored internally and are not displayed on the form. Appendix I contains a list of the inlet control coefficients.

Selecting a Size

You can specify the culvert size two ways; select a standard size or type in the dimensions.

Standard Size Selection

When you select a “Culvert Type” the available standard sizes are automatically displayed in the drop-down list box beneath “IDOT Standard Sizes”. You can scroll the list box to select a size and number of barrels.

Entering a Barrel Size

If you wish to enter a size click “Enter Barrel Size”, or click the radio button to the left of “Enter Barrel Size”. This will enable text boxes where you can type in the dimension(s) of the culvert barrel and select the number of barrels.

Culvert Elevations and Length

You need to enter the,

Culvert Inlet Invert Elevation (elevation of the inside bottom of the culvert at the inlet).

Culvert Outlet Invert Elevation (elevation of the inside bottom of the culvert at the outlet).

Culvert Barrel Length: The length of the culvert barrel. This is the actual length of the culvert barrel, not the horizontal distance from the inlet to the outlet.

The parameters are illustrated in the following figure:

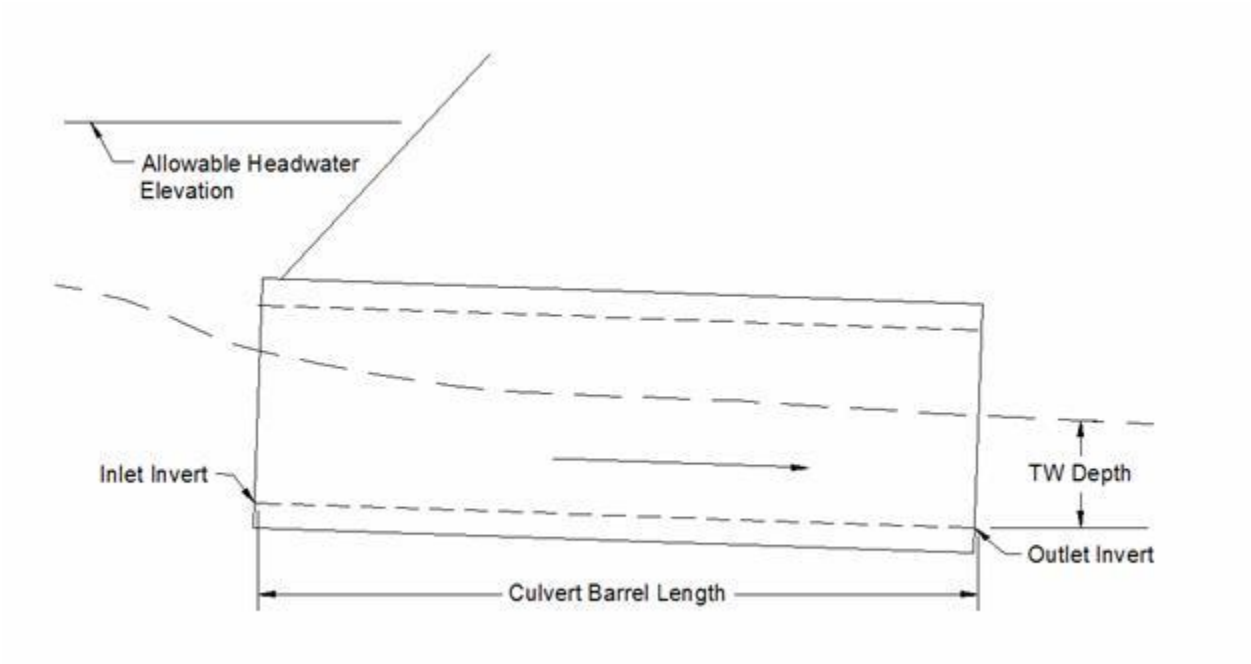

Design Parameters

Design Q (cfs): The Q value. The discharge or flowrate through the culvert.

Tailwater Depth (ft): The tailwater depth. The depth of water at the culvert outlet, above the outlet invert, created by down-stream conditions. Clicking "Compute TW Depth" will compute the tailwater depth using the Design Q, the Tailwater Channel Cross-Section and the Manning Equation (assuming uniform flow).

Results

As mentioned the "Exit Velocity" is determined using the same methods as for General Culvert Design. The basin parameters are based on the "Design Pipe Diameter" and the "Exit Velocity", using a table adapted from the Nebraska Department of Roads. The table is shown in Appendix N.

As you can note in Appendix N, the table is for circular pipes of discrete sizes. The "Equivalent Pipe Diameter" is the size of circular pipe that has the same cross-sectional area as the culvert selected. The "Design Pipe Diameter" is the largest pipe diameter in the design table (Appendix

N) that is less than or equal to the "Equivalent Pipe Diameter". Using these parameters the basin dimension parameters A, C, E, T and F are determined from the table.

The basin parameters are defined by the NE Plunge Basin Plot, shown above. "Total Length" is the total length of the basin in the direction of flow. "W" is the minimum width of the basin at the culvert outlet.

The riprap size, "Riprap Size, D-50, (ft)" is the minimum average stone diameter and "Riprap Thickness (ft)" is the vertical thickness of the basin bottom, as shown by the NE Plunge Basin Plot.

Hec-14 Riprap Basin

Click "Erosion", then "HEC-14 Riprap Basin Design" to display the "HEC-14 Riprap Basin Design" form. The design methods used are based on methods from Hydraulic Engineering Circular No. 14 (Hec-14), Hydraulic Design of Energy Dissipators for Culverts and Channels, U.S. Department of Transportation, Federal Highway Administration, September 1983. You can download a copy of the Hec-14 manual at http://www.fhwa.dot.gov/bridge/hydpub.htm.

General details of the HEC-14 Riprap Basin are shown on the Hec-14 Riprap Basin Plot, shown below. This figure is taken from the Hec-14 manual. Details on the calculation methodology are in Appendix O: Hec-14 Riprap Basin.

To use the software you must first define the Culvert Type, Inlet and Size and the Design Q and Tailwater Depth. With these parameters defined you then click the "Compute" button to have the riprap basin parameters and dimensions determined and displayed.

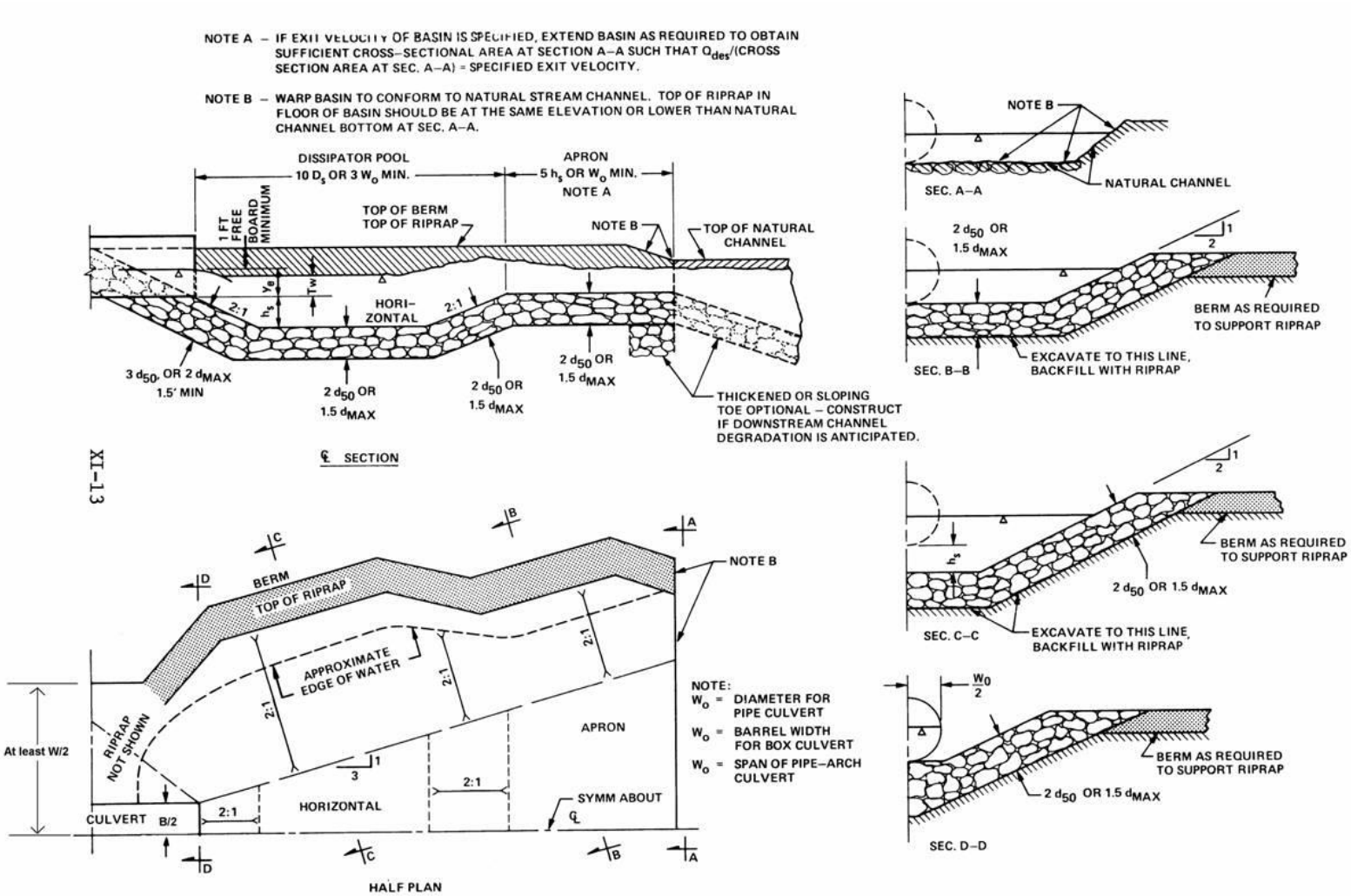

FIGURE X1–1. DETAILS OF RIPRAPPED CULVERT ENERGY BASIN

The options for culvert type, inlet and size are the same as those for culvert general design.

Culvert Type, Inlet and Size

The "Culvert Type, Inlet and Size" frame is where you specify the culvert information. You specify the culvert type using the drop-down list box to the right of "Culvert Type".

Currently, the six types of culverts are,

RCB: Reinforced Concrete Box
RCP: Reinforced Concrete Pipe
CMP: Corrugated Metal Pipe
CPA: Concrete Pipe Arch
SPA: Steel Pipe Arch (2-2/3" by 1/2" corrugations)
SPA: Steel Pipe Arch (3" X 1" or 5" X 1" corrugations)

When you select a culvert type a default "Manning n" value is automatically displayed. You may use the default or type in a "Manning n" value.

Culvert Inlet:

When you select a culvert type the "Inlet Type" list box is automatically filled with the inlet types that are currently built into the software for the selected culvert type. For a selected inlet type the default Ke value (entrance loss coefficient) is displayed. You can use the default value or type in a "Ke" value.

Each culvert type – inlet combination has associated with it the coefficients used for inlet control computations. These coefficients are stored internally and are not displayed on the form. Appendix I contains a list of the inlet control coefficients.

Selecting a Size

You can specify the culvert size two ways; select a standard size or type in the dimensions.

Standard Size Selection

When you select a "Culvert Type" the available standard sizes are automatically displayed in the drop-down list box beneath "IDOT Standard Sizes". You can scroll the list box to select a size and number of barrels.

Entering a Barrel Size

If you wish to enter a size click "Enter Barrel Size", or click the option button to the left of "Enter Barrel Size". This will enable text boxes where you can type in the dimension(s) of the culvert barrel and select the number of barrels.

Culvert Elevations and Length

You need to enter the,

Culvert Inlet Invert Elevation (elevation of the inside bottom of the culvert at the inlet).

Culvert Outlet Invert Elevation (elevation of the inside bottom of the culvert at the outlet).

Culvert Barrel Length: The length of the culvert barrel. This is the actual length of the culvert barrel, not the horizontal distance from the inlet to the outlet.

The parameters are illustrated in the following figure:

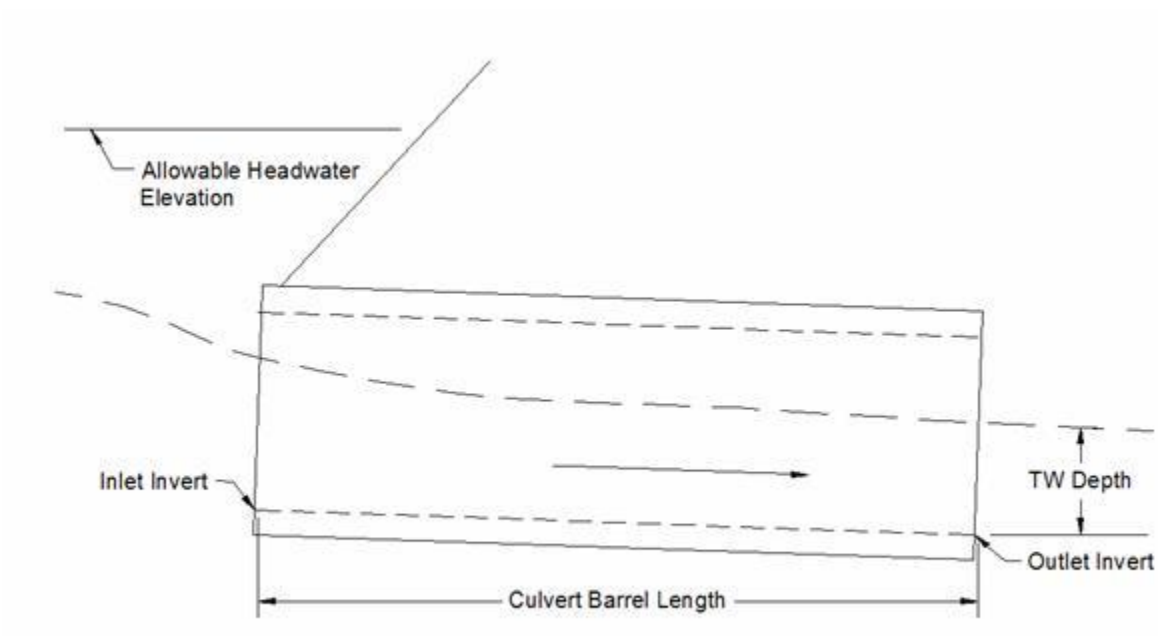

Design Parameters

Design Q (cfs): The Q value. The discharge or flowrate through the culvert.

Tailwater Depth (ft): The tailwater depth. The depth of water at the culvert outlet, above the outlet invert, created by down-stream conditions. Clicking "Compute TW Depth" will compute the tailwater depth using the Design Q, the Tailwater Channel Cross-Section and the Manning Equation (assuming uniform flow).

Results

The design parameters determined by the software are:

Minimum Width at Inlet, W(ft): This is the minimum width of the riprap basin at the inlet of the riprap basin (the outlet of the culvert), as illustrated on the Hec-14 Riprap Basin plot, shown

above. This parameter is not part of Hec-14, but is recommended by the Iowa Department of Transportation. This parameter is equal to twice the culvert(s) span.

Calculated Riprap Size, d-50 (ft): This is the minimum median size of rock to be used for the riprap basin (Hec-14 Riprap Basin plot).

Recommended Riprap d-50: Based on the calculated riprap size, this is the recommended riprap size if you wish to use Class E or Class B riprap. Class E is recommended if the calculated riprap size is <= 1.2 feet, and Class B is recommended if the recommended riprap size is > 1.2 feet and <=2.0 feet. You may use the calculated riprap size for design in place of the recommended riprap d-50.

APPROACH RIPRAP THICKNESS

The approach riprap location is the slope from the culvert outlet to the floor of the dissipator pool (Hec-14 Riprap Basin plot). It is the location where the riprap thickness is shown as 3 d_{50}.

Calculated Riprap Thickness (ft): This is the calculated riprap thickness to use for the approach section. You can note on the figure that this is simply computed as 3 times the d-50.

Recommended Riprap Thickness (ft): This is the larger of the calculated riprap thickness, or 3 foot if the recommended riprap d-50 is Class E or 4.5 feet if the recommended riprap d-50 is Class B.

BASIN/APRON RIPRAP THICKNESS

The basin/apron riprap thickness is the riprap thickness to be used for the remainder of the basin: the dissipator pool (except for the approach) and the apron, or the locations on the Hec-14 Riprap Basin plot where the riprap thickness is shown as 2 d_{50}.

Calculated Riprap Thickness (ft): This is the calculated riprap thickness to use for the basin and apron section. You can note on the figure that this is simply computed as 2 times the d-50.

Recommended Riprap Thickness (ft): This is the larger of the calculated riprap thickness, or 2.0 foot if the recommended riprap d-50 is Class E or 3.0 feet if the recommended riprap d-50 is Class B.

Other Parameters:

The remaining parameters are listed in the table on the form. The only values discussed here are the values relevant to the basin size. The parameters not covered here are discussed in Appendix O: Hec-14 Riprap Basin.

Brink TW (ft): This is simply the tailwater depth: the depth above the culvert outlet invert.

hs (ft): This is an important parameter, as illustrated on the Hec-14 Riprap Basin plot above. This is the depth of the dissipator pool below the culvert outlet invert. It is critically important

that the riprap basin pool bottom be placed at least this deep below the culvert outlet invert. The design methodology is based on an estimate of scour depth, and the pool depth is based on this scour estimate.

Basin Length (ft): This is the total length of riprap basin, from the culvert outlet to the end of the apron. It is the sum of the dissipator pool length and the apron length.

Pool Length (ft): The length of the dissipator pool, from the culvert outlet to the start of the apron.

Apron Length (ft): The length of the apron, from the end of the dissipator pool to the return to natural channel conditions.

hs/d50: The Hec-14 manual states this parameter should be between 2 and 4. When you click "Compute" the software automatically finds, if possible, a d-50 and corresponding hs such that the ratio hs/d50 falls between 2 and 4.

TW/Yo: Ratio of tailwater depth (TW) to culvert outlet brink depth (Yo). If this ratio exceeds 0.75 the Hec-14 manual suggests that additional channel protection beyond the apron may be needed. Please see the Hec-14 manual, chapter XI, for additional information.

Vo (ft/s): The estimated velocity at the culvert outlet.

See Appendix O: Hec-14 Riprap Basin for parameters not covered here, or for more details.

Appendices

Appendix A: Hydraulic Design of Highway Culverts, HDS-5

Most of the concepts, equations and coefficients used in this software for culvert hydraulic calculations are taken from, Hydraulic Design of Highway Culverts, Hydraulic Design Series No. 5, Report No. FHWA-IP-85-15, September 1985. This report is often referred to as HDS-5, for Hydraulic Design Series, No. 5. The most recent version of this report is "Hydraulic Design of Highway Culverts, Third Edition, April 2012".

You can download a copy of the most recent report from the Internet. The download is in Adobe Acrobat format, a PDF file. You can go directly to the pdf file for the latest version (2012) using the URL: http://www.fhwa.dot.gov/engineering/hydraulics/pubs/12026/hif12026.pdf.

Appendix B: Copying and Pasting Values

When you right click on selected tables you either see the menu

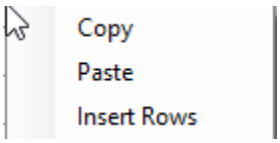

Or

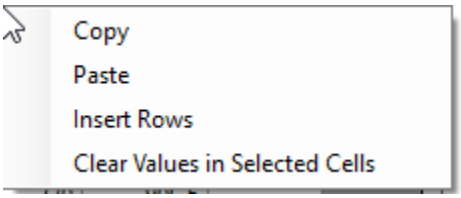

Copy

Selecting "Copy" will copy the selected items in the table to the clipboard. You can also use the keyboard shortcut Ctrl-C to copy selected items to the clipboard. Note that values copied to the clipboard can be pasted to other tables in the software or to other programs (such as Excel).

Paste

"Paste will paste the content in the clipboard above the currently selected top row, adding rows as needed. Select the row you want to Paste content above before right clicking. Note that you can use Paste to add values that have been added to the clipboard from other programs. For example, if you copy values to the clipboard in Excel, you can then add them to the table using Excel.

Insert Rows

“Insert Rows” will bring up the insert rows dialog,

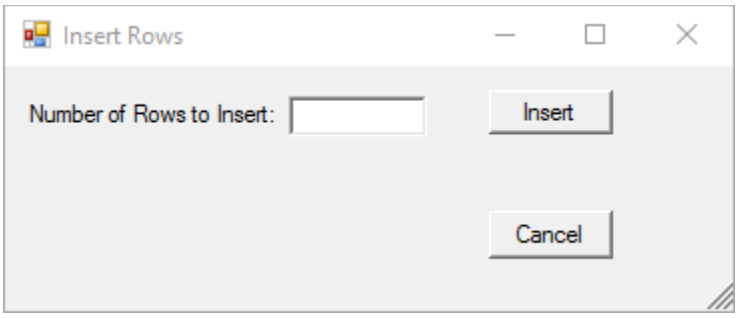

Enter the Number of Rows to Insert, and that number of empty rows will be added above the currently selected top row.

To delete rows, select the rows you wish to delete and press the “Delete” key.

Clear Values in Selected Cells

To erase the values in selected cells (without deleting the rows), select the items you wish to erase, then right click and select “Clear Values in Selected Cells”.

Appendix C: The Iowa Runoff Chart

The following is taken from material prepared by the Iowa DOT.

In the 1950's, the Iowa State Highway Commission (now Iowa DOT} adapted Bureau of Public Roads' Chart 1021.1, "Highway Drainage Manual", 1950. (BPR’s chart was adapted from original work performed by W.D. Potter, "Surface Runoff from Small Agricultural Watersheds," Research Report No. 11-B, (Illinois) Highway Research Board, 1950.) The Iowa Runoff Chart has been widely used by IDOT and the counties since then.

The chart is self-explanatory. However, its use does require the exercise of judgement in selecting the land use and land slope factors. It can be used for rural watersheds draining up to 1000 acres.

The following is intended to aid that judgement:

Very Hilly Land-is best typified by the bluffs bordering the Mississippi and the Missouri Rivers. This terrain is practically mountainous (for Iowa) in character. Small areas of very hilly land can be found in all parts of the state. Typically, they can be found near the edge of the flood plains of the major rivers.

Hilly Land-is best typified by the rolling hills of south central Iowa. Interstate 35 in Clarke and Warren Counties traverses many hilly watersheds. Small areas of hilly land can be found in all parts of the state.

Rolling Land-is best typified by the more gently rolling farm lands of central Iowa. Interstate 80 in Cass and Adair Counties traverses many rolling watersheds. Small areas of rolling land can be found in all parts of the state.

Flat Land--is best typified by the farm lands of the north central part of the state. U.S. 69 traverses many flat watersheds in Hamilton and Wright Counties. Small areas of flat land can be found in all areas of the state.

Very Flat Land-is best typified by the Missouri River flood plain. Interstate 29 is located on this type of land for most of its length. Much of Dickinson, Emmet, Kossuth, Winnebago and Palo Alto Counties are also in this classification. Small areas of very flat land can be found in all parts of the state.

Use this chart only for rural watersheds and the limitations of drainage areas listed below. The equations were developed by finding the best statistical fit to the curve on the Runoff Chart. At the larger drainage areas (600 to 1000 acres), the equation overestimates Q taken from the Chart by up to 7%. In most cases, however, this would not result in a larger culvert size. If the designer questions the equation results, use the curve on the Chart. Be aware that error (overestimating or underestimating) may also result from interpolating the Q from the curve.

English equation

For drainage areas, $2 < A < 1000$ acres

$Q_{design}=LF \times FF \times Q$

Where $Q=8.124A^{0.739}$

Q is in ft^3/s

A is in acres

Metric equation

For drainage areas, $1 < A < 400$ hectares

$Q_{design}=LF \times FF \times Q$

Where $Q=0.446A^{0.740}$

Q is in m^3/s

A is in hectares

Frequency Factor (FF)

Frequency, years	5	10	25	50	100
Factor, FF	0.5	0.7	0.8	1.0	1.2

Land Use and Slope Description (LF)

	Very Hilly	Very Hilly/Hilly	Hilly	Hilly/Rolling	Rolling	Rolling/Flat	Flat	Flat/Very Flat	Very Flat (no ponds)
Mixed Cover	1.0	0.9	0.8	0.7	0.6	0.5	0.4	0.3	0.2
Permanent Pasture	0.6	0.55	0.5	0.45	0.4	0.3	0.2	0.15	0.1
Permanent Woods	0.3	0.275	0.25	0.225	0.2	0.15	0.1	0.075	0.05

Note: The software does not use the interpolation equations shown above. Instead the runoff chart curve was broken into seven segments, and an equation fit to each segment. The equations used in the software more accurately approximate the chart shown below. The form of the equation for each segment is,

$Q = KA^C$, with the drainage area, A, in acres and Q in ft^3/s.

The K and C coefficients used in the software are;

A-lower bound acres	A-upper bound acres	K	C
1	2	5.999999025	0.934830605
2	8	6.487896116	0.822050013
8	70	7.227231496	0.770168688
70	400	9.200404872	0.713352619
400	500	3.90153509	0.856567274
500	700	30.403546702	0.5261929
700	2000	13.136699772	0.654298525

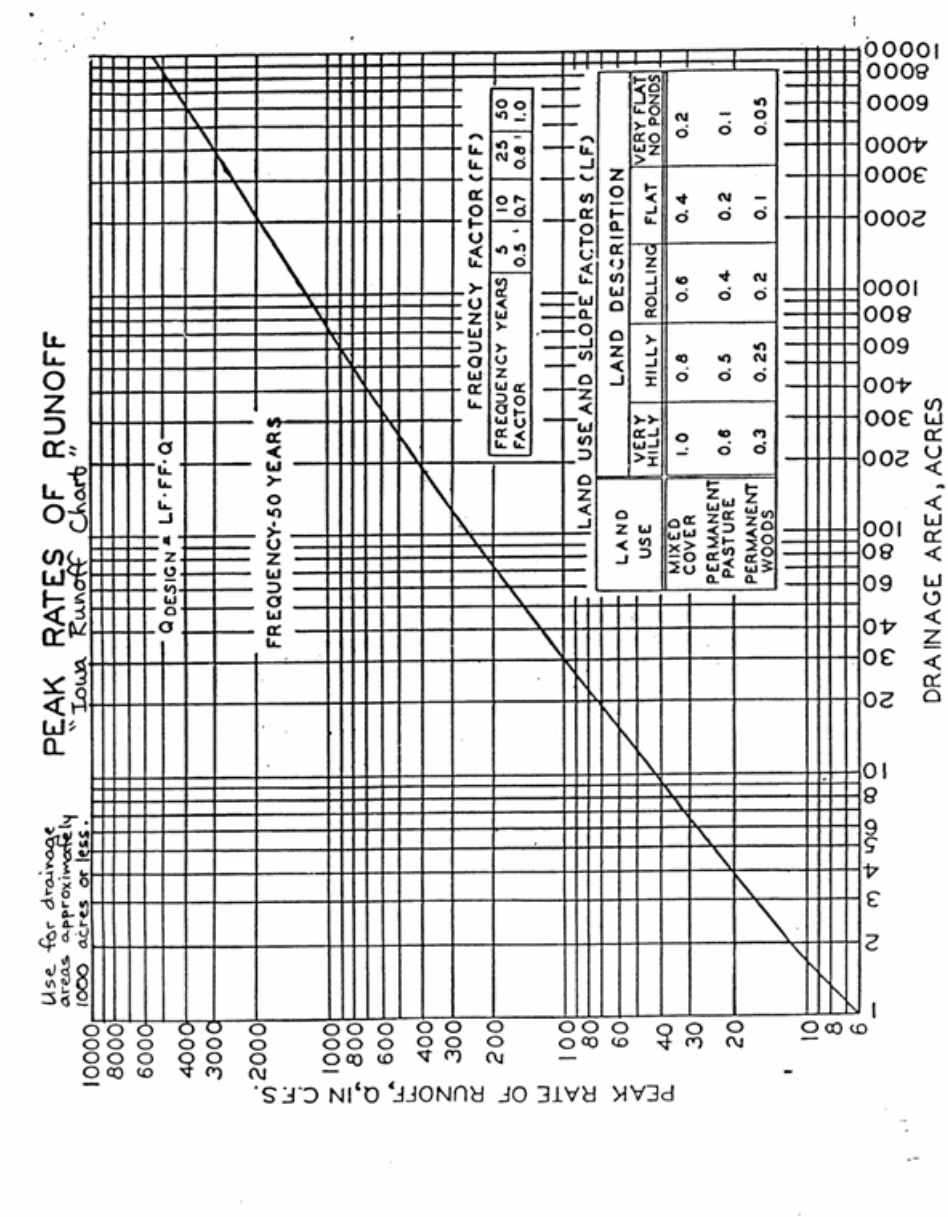

Appendix D: Tailwater Computations

Tailwater computations are done using the Manning Equation,

$$Q = \frac{1.49AR^{2/3}S^{1/2}}{n}$$

where A is the cross-sectional area of flow, R is the hydraulic radius, S is the slope of the energy grade line and n is the Manning coefficient. The hydraulic radius is,

R=A/P

Where P is the wetted perimeter.

In many cases, with a natural channel, the total Q is computed as the sum of sub-area Qs, as illustrated below. If there are multiple flow areas, the Q is computed for each flow area and summed. If there is a change in Manning n value, a sub-area is created and a sub-area Q is computed for each area where the Manning n is constant.

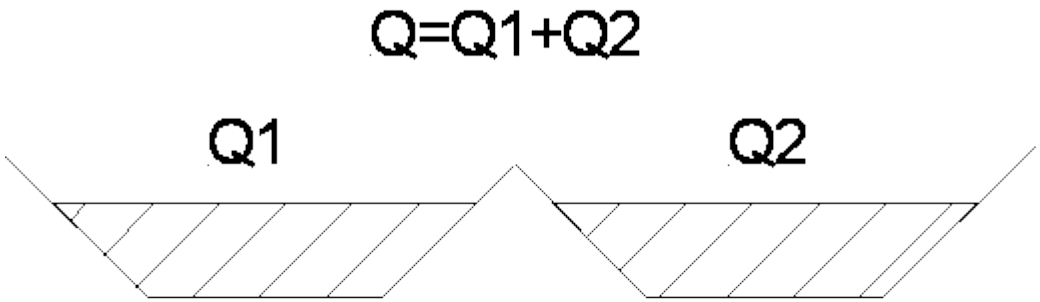

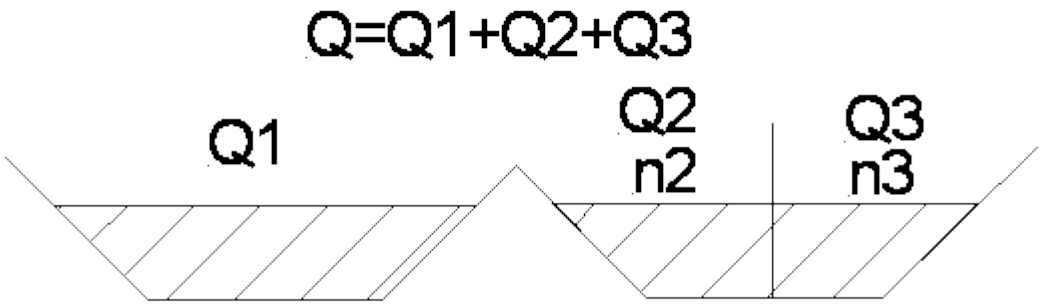

Appendix E: Tapered Inlet Design

The following information is taken from IDOT information on, Guidelines for Preliminary Design of Bridges and Culverts. The methodology used in the software for designing tapered inlets follows the general concepts, but the software actually computes the headloss, as discussed in Appendix G: Tapered Inlet Calculations.

Design Guidelines for Slope Tapered Box Culverts

The purpose of slope tapered box culverts is to reduce construction costs by using a smaller barrel but still providing acceptable hydraulic capacity and upstream headwater. These special inlets have been used in Iowa and across the country since the 1950's or earlier. The design of these inlets includes rigid hydraulic design and good construction practice.

The culvert site normally will meet two basic requirements to qualify for a tapered inlet. The first is that the additional design costs are offset by the reduction in construction costs. The second is that the site must have enough fall for the design to perform properly, typically at least six to eight feet.

The culvert inlet is made large enough to keep the depth of water at the entrance within allowable limits. The slope taper section funnels the water down a steep slope as the culvert width decreases. The barrel section is designed to flow nearly full when carrying the design discharge. Generally the outlet has a flume and basin for energy dissipation.

Design Steps

There are five basic steps for the hydraulic design of a box culvert with a slope tapered inlet.

1. Determine the design discharge. The Iowa Runoff Chart shall be used for rural watersheds draining 1000 acres (400 hectares) or less.
2. Determine the allowable depth of water at the inlet. Typically, the Iowa DOT allows one foot (0.3 m) of water above the top of the inlet.
3. Select an inlet size that results in a flow depth less than or equal to the allowable. Inlet control nomographs from FHWA's Hydraulic Design of Highway Culverts, HDS No. 5, can be used for this.
4. Select a barrel size and slope that results in the barrel flowing less than full. The barrel height should be the same as the inlet, while the barrel width should generally be no less than 50 to 60% of the inlet width. Select a slope steep enough to maintain supercritical flow. Charts in FHWA's Design Charts for Open-Channel Flow, HDS No. 3, have been developed from Manning=s equation and can be used to select the appropriate slope.
5. Determine the drop and length of the slope tapered section. The minimum drop needed is the specific energy at the inlet (H_1) minus the specific energy at the barrel (H_2) plus energy losses (H_L). Specific energy is the depth plus velocity head at a given location.

The following guidelines, charts and worksheets (English and metric units) are provided to assist in the hydraulic design.

When the inlet will be raised significantly to create a pond, geotechnical concerns must be considered to ensure that seepage through the embankment is not excessive.

General Guidelines

1. HW from inlet control charts for proposed inlet size, no greater than D + 2 ft. (D + 0.6 m.)
2. The height (D) of the structure does not change.
3. Calculated Z may be rounded to the next higher increment as described below. Minimum Z = 3 ft. (0.9 m.)
4. Taper can be designed by using the RCB standard reinforced steel pattern of inlet size for the entire length of the taper and varying the length of the transverse steel.
5. The barrel outlet flowline is usually set at least ½ (D) above streambed. This prevents the barrel from "drowning out".
6. The outlet usually has a flume with a basin that is buried 4 ft. to 6 ft. (1.2 m. to 1.8 m.) below streambed, to help dissipate energy.
7. The barrel slope (S_o) should generally be 1.5% or steeper in order to maintain supercritical flow and the maximum flow depth of 0.9D in the barrel. (See "Design Charts for Open Channel flow", HDS No. 3, FHWA, to determine specific flow depths for various slopes.)
8. An attempt should be made to design barrel sizes to conform with standard RCB sizes. This may mean starting with a "wide" non-standard inlet.
9. Assume energy loss, H_L = 0.2 ft. (0.1 m.) for all cases.

Guidelines for single RCBs

1. Use drop rate (L/Z) of approximately 3:1.
2. Ratio of barrel width to inlet width (B_2/B_1) should be 50% or greater.
3. For Z=3 ft., use L=10 ft. For Z=4 ft., use L=12 ft. For Z=5 ft., use L=15 ft. (For Z=0.9 m., use L=3.0 m. For Z=1.2 m., use L=3.6 m. For Z=1.5 m., use L=4.5 m.)

Guidelines for Twin RCBs

1. Use drop rate (L/Z) of 5:1 (min.)
2. Ratio of barrel width to inlet width (B_2/B_1) should be 60% or greater.
3. L is determined either by (B_1 - B_2) x 4 or Z x 5, whichever is greater. This insures a minimum side taper of 4:1. L should generally be in 5 ft. (1.5 m.) increments.

Definitions

HW -- Headwater from inlet control charts
H_1 -- Specific energy head at inlet
H_2 -- Specific energy head at barrel
B_1 -- Width of inlet opening
B_2 -- Width of barrel opening
D -- Height of opening
H_L -- Energy loss
d_c -- Critical depth
Z -- Drop in flowline required
L -- Length of taper section
S_o -- Slope of barrel
$V^2/2g$ -- Velocity head
N = L/Z = Slope of taper section

Slope Tapered Box Culverts

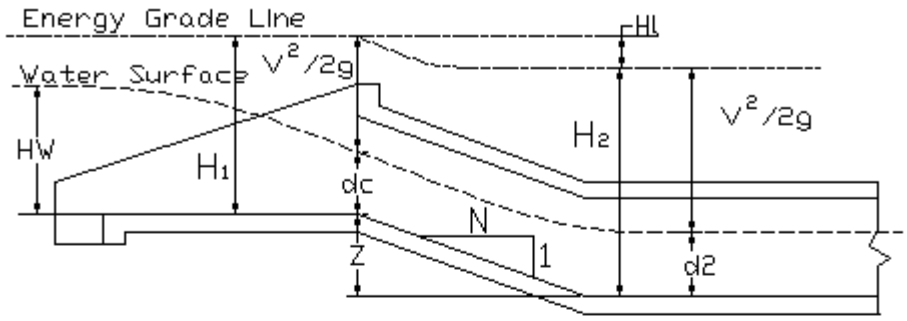

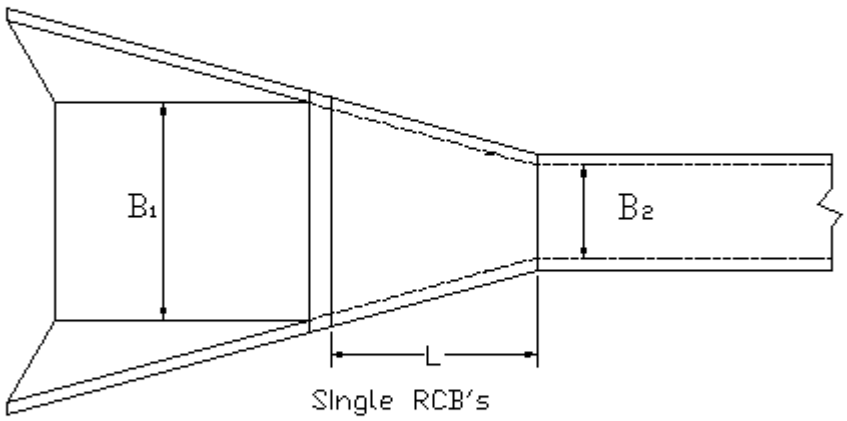

Single RCB's

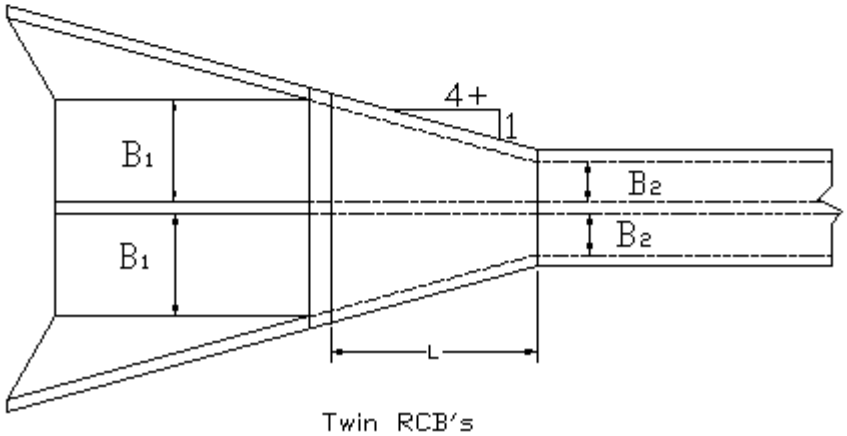

Twin RCB's

Sample Slope Tapered Box Culvert and Flume

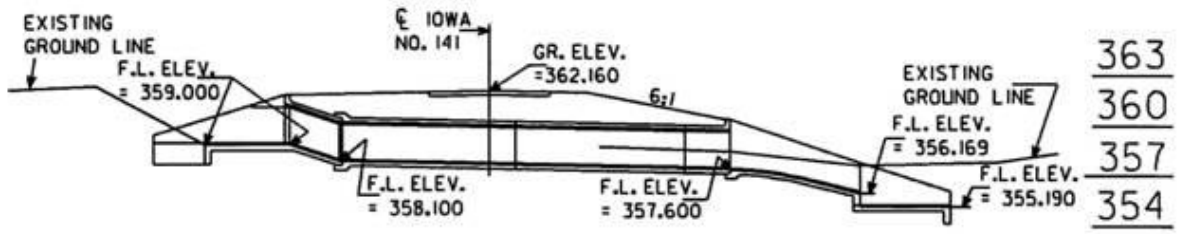

LONGITUDINAL SECTION ALONG ℄ CULVERT

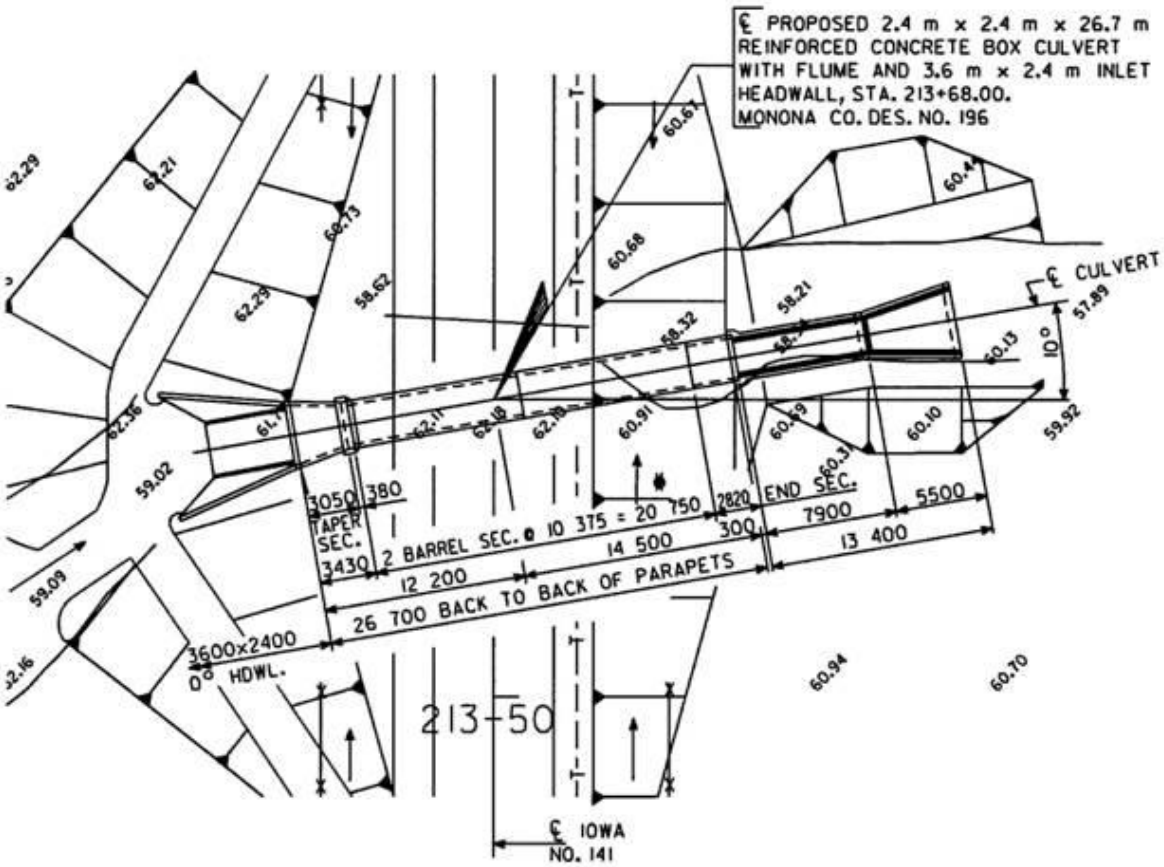

SITUATION PLAN

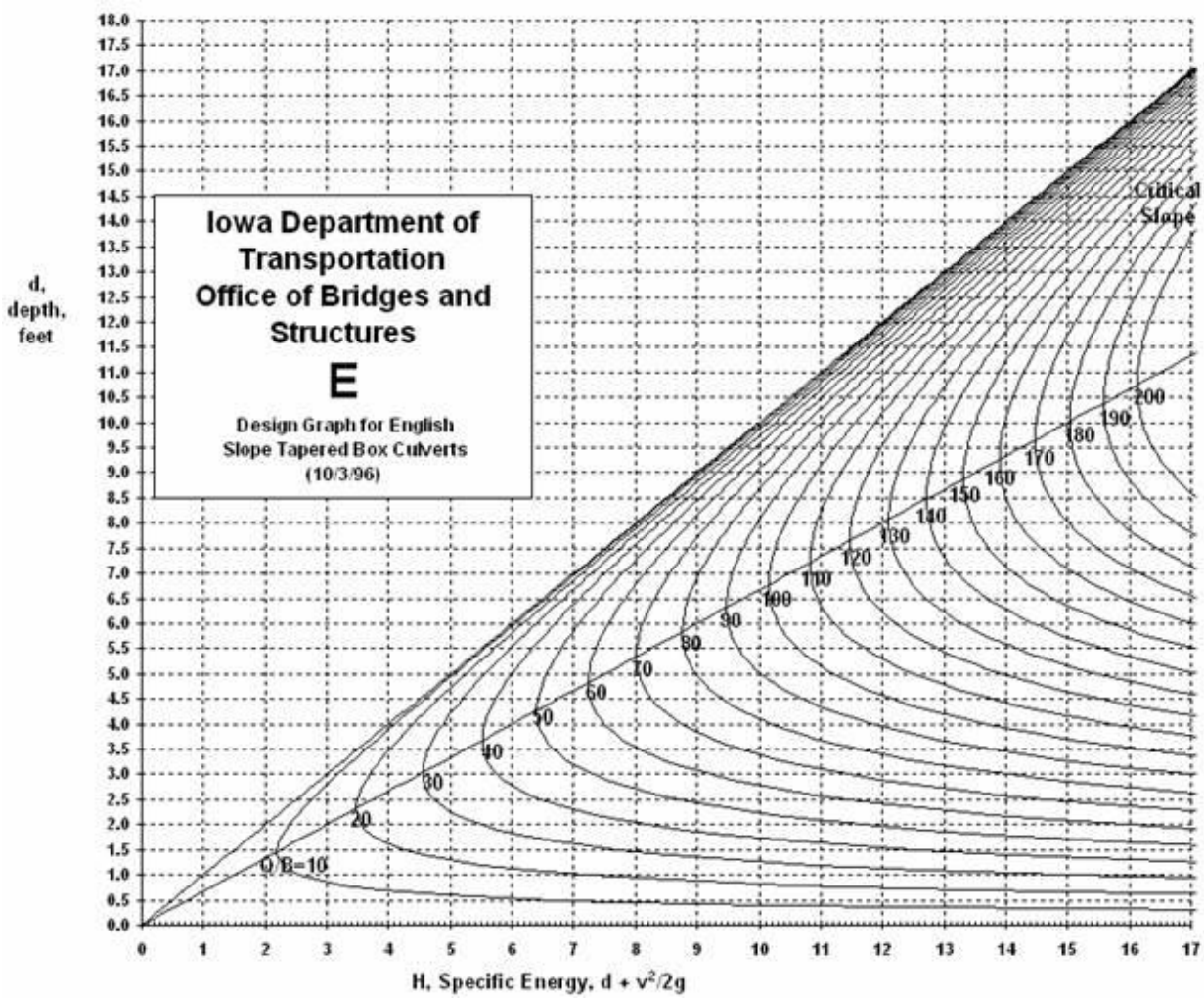
Iowa Department of Transportation
Office of Bridges and Structures
E
Design Graph for English
Slope Tapered Box Culverts
(10/3/96)
d, depth, feet
H, Specific Energy, d + v²/2g
Critical Slope
Q/B=10
20
30
40
50
60
70
80
90
100
110
120
130
140
150
160
170
180
190
200

May 29, 1998

Worksheet for Slope Tapered Box Culverts (English)

Project_____ County_____ Des. No._____

Sta._____ Designer_____ Date_____

Variable	**Example**	**Trial 1**	**Trial 2**	**Trial 3**	**Trial 4**
Design Q, ft^3/sec	600				
Inlet Section					
B_1 X D, ft x ft (size of inlet)	10 X 6				
Q/B_1	60				
HW, ft (from HDS #5 nomographs)	7.5				
d_c, ft (from Design Graph)	4.8				
H_1, ft (from Design Graph)	7.2				
Barrel Section					
B_2 X D, ft x ft (size of barrel)	6 X 6				
Q/B_2	100				
0.9 X D, ft	5.4				
H_2, ft (from Design Graph)	10.7				
Slope Tapered Section					
H_L, ft (assumed)	0.2	0.2	0.2	0.2	0.2
Z, ft (= H_2 - H_1 + H_L)	3.7				
Selected Z, ft	4.0				
Selected L, ft	12				
Barrel Slope					
d_n = 0.9 X D, ft	5.4				
Min. Slope, % (from HDS No. 3 or Mannning's eqn.)	1.5				
Is the design acceptable?	Yes				

Appendix F: Tapered Inlet Calculations

The software uses the same concepts, but does the tapered inlet calculations differently than the hand calculation method demonstrated in Appendix G.

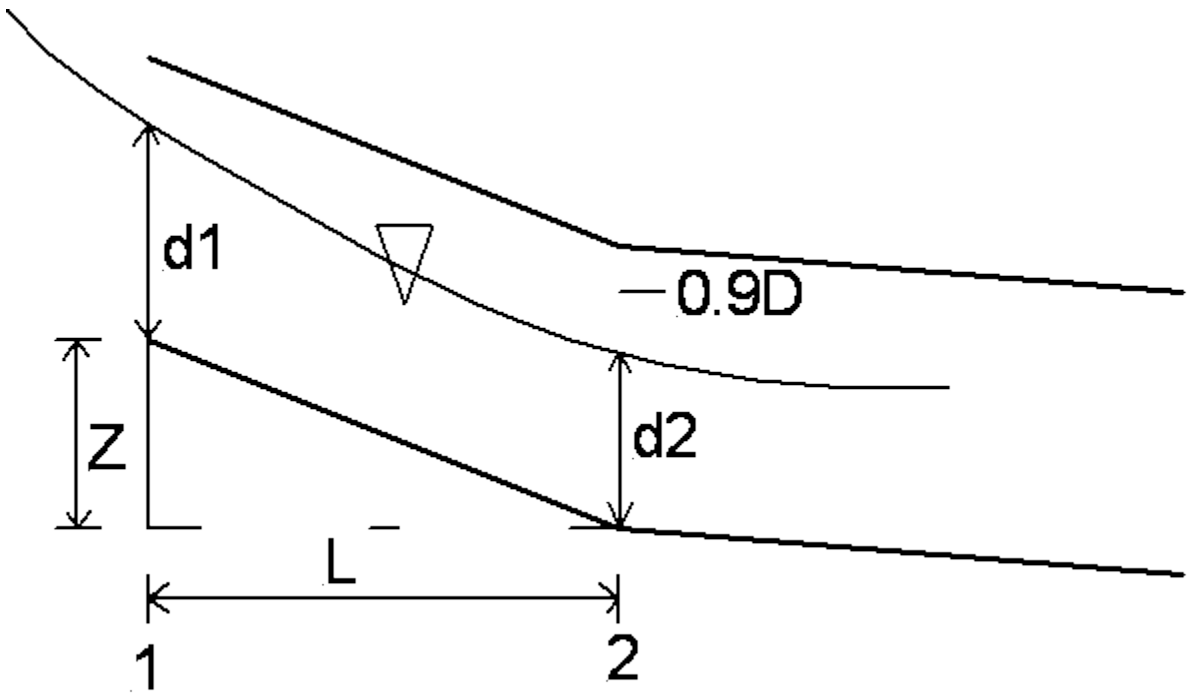

Writing the energy equation from point 1 (inlet face) to point 2 (barrel inlet),

$$z_1 + d_1 + \frac{V_1^2}{2g} = z_2 + d_2 + \frac{V_2^2}{2g} + H_f$$

where H_f is the friction loss from 1 to 2. The friction loss can be estimated by,

$$H_f = \left(\frac{S_1 + S_2}{2}\right) L$$

where S is the slope of the energy grade line, estimated from the Manning Equation.

Substituting the expression for head loss, and solving the equation for the information at point 2,

$$d_2 + \frac{V_2^2}{2g} + \frac{S_2}{2} L = Z + d_1 + \frac{V_1^2}{2g} - \frac{S_1}{2} L$$

The depth at the inlet, d_1, is assumed to be equal to critical depth. For a given Z and L the software solves the above equation for d_2, the depth at the barrel inlet (or the depth at the end of the taper). This is done by trial and error. If the depth found at 2, d_2, is less than or equal to 90% of the height of the barrel, the Z and L are feasible for the barrel.

Appendix G: Drop Inlet Design

The following information is taken from IDOT information on Guidelines for Preliminary Design of Bridges and Culverts. The software uses the following equations and concepts, but also does inlet control headwater computations and uses the larger of inlet control and outlet control headwater to estimate the barrel headwater at the inlet.

Design Guidelines for Drop Inlet Culverts January 11, 1999

Drop inlets for pipe and box culverts can be beneficial solutions to some drainage and erosion problems. Hydraulically, they are useful when a culvert has limited available head upstream. Also, they can be used to raise the flowline to create a pond or stop channel erosion upstream.

When evaluating the hydraulics of drop inlet culverts, two controls must be checked to determine the design high water of the culvert. The first is barrel control using the orifice equation, also known as the full-flow equation, taken from a U.S. Soil Conservation Service technical memorandum for drop inlets. The equation is similar to the outlet control equation in FHWA's Hydraulic Design of Highway Culverts, HDS No. 5. The second is weir control, using the broad-crested weir equation. The equation giving the highest water elevation is considered the controlling headwater.

A trial and error solution is needed to determine what size of barrel and weir are needed. Start by sizing the barrel and analyzing the hydraulics. When an acceptable size and headwater are obtained, assume a drop inlet opening of 1.5 to 2.0 times the barrel opening. Then calculate the head created by the weir and determine if a different size inlet is needed.

Worksheets (English and metric units) are attached to aid in the calculations.

Barrel (Full Flow) Equation

$$Q = A\left[\frac{2gH}{1 + K_e + K_b + K_f L_b}\right]^{0.5}$$

where Q = discharge, ft^3/sec (m^3/sec)
A = area of culvert barrel, ft^2 (m^2)
g = acceleration due to gravity = 32.2 ft/sec^2 (9.81 m/sec^2)
H = head (energy) needed to pass the flow through the barrel, feet (m)
K_e = entrance loss coefficient
K_b = bend loss coefficient
L_b = length of barrel, ft
K_f = friction loss coefficient
= $29.16\ n^2 / R^{1.33}$ (English), or = $19.63 n^2 / R^{1.33}$ (metric)
n = roughness coefficient

R = hydraulic radius of barrel = area / wetted perimeter, ft (m)

Assume $K_e + K_b = 1.0$ for typical Iowa DOT drop inlet

n = 0.012 for smooth pipe, or 0.024 for corrugated metal

R = A/(2(W + H)) for RCBs or D/4 for round pipe barrels

h_o = height of hydraulic grade line at outlet = TW or $(d_c + D)/2$, whichever is greater, ft (m)

(TW can be determined from the Manning's equation using a downstream valley section. d_c can be found in Chart 4 or 14 in FHWA's HDS No. 5. D is the height of the barrel.)

This results in the following full flow equation, assuming English units and a smooth (e.g., concrete) barrel:

$$Q = A\left[\frac{64.4H}{2 + 0.0042\left(\frac{L_b}{R^{1.33}}\right)}\right]^{0.5}$$

Or solving for H,

(Equation 1 – English)

$$H = \left[\frac{0.1246Q}{A}\right]^2\left[2 + \frac{0.0042L_b}{R^{1.33}}\right]$$

Equation 1 in metric units converts to the following:

(Equation 2 – Metric)

$$H = \left[\frac{0.226Q}{A}\right]^2\left[2 + \frac{0.0028L_b}{R^{1.33}}\right]$$

H is the head (energy loss) required to pass the flow through the barrel. To determine the headwater (HW) elevation at the inlet, add H and h_o to the outlet flowline elevation, where h_o is either tailwater (TW) depth or $(d_c + D)/2$, whichever is greater. (See Chapter III of FHWA's "Hydraulic Design of Highway Culverts", HDS No. 5, for a more detailed discussion of barrel [outlet] control.)

Then compare the HW elevation to allowable head water (AHW) elevation. If HW > AHW, a larger barrel is needed. If HW < AHW, either try a smaller barrel size or proceed with the weir control calculations as described below.

Weir Equation

$$Q = CL_wH^{1.5}$$

where Q = discharge, ft^3/sec (m^3/sec)
C = coefficient. Use C = 3.09 (English units), or = 1.71 (metric units)
L_w = effective length of weir, feet (m). The typical IDOT drop inlet has a parapet on one side, so consider only three sides to determine L_w. (The parapet improves the inlet efficiency by minimizing vortex action.)
H = head, feet (m)

(H actually is depth plus velocity head, but for simplicity assume velocity head as negligible. This will result in a conservative headwater design.)

Or solving for H,

(Equation 3)

$$H = \left[\frac{Q}{CL_w}\right]^{0.667}$$

H is the head above the drop inlet flowline. To determine HW elevation for weir control, add H to the weir elevation and compare to the AHW elevation. If HW > AHW, then a larger weir is needed. If HW < AHW, either try a smaller weir or proceed with the selected size.

After an acceptable weir size is selected, compare HW for weir control to HW for barrel control. In essence, this comparison finds out which portion of the culvert is the most hydraulically restrictive: the weir or the barrel. The higher HW is the controlling elevation and indicates how high the water will get upstream of the culvert during the design flood.

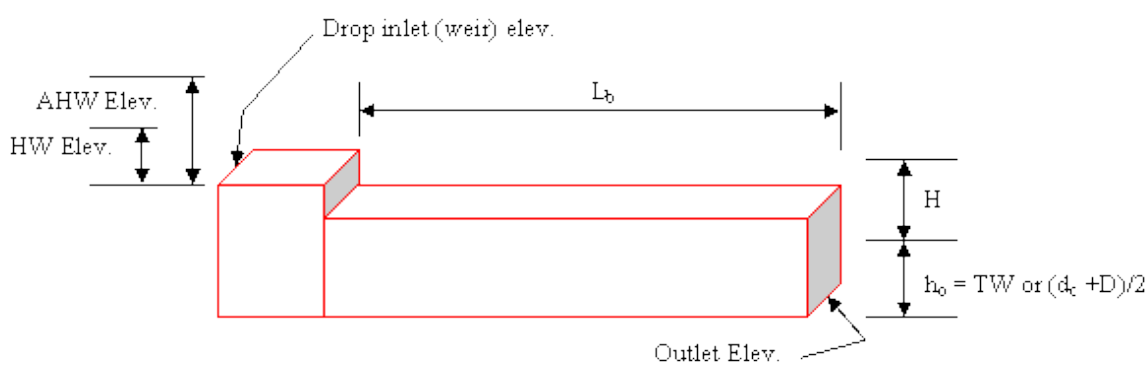

Sample Drop Inlet Culvert

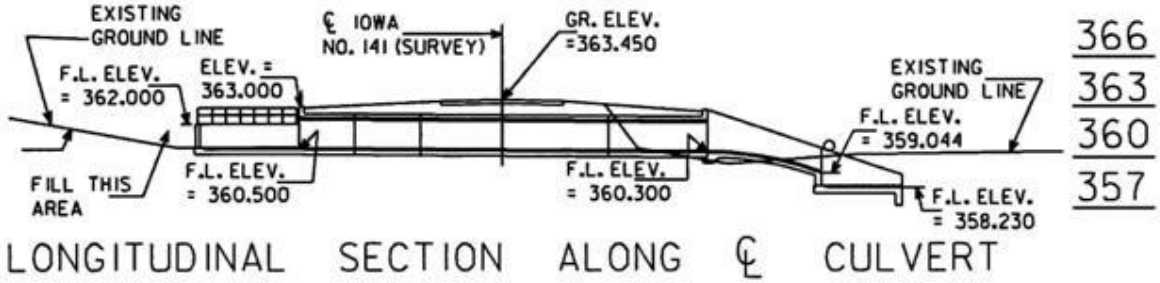

LONGITUDINAL SECTION ALONG ℄ CULVERT

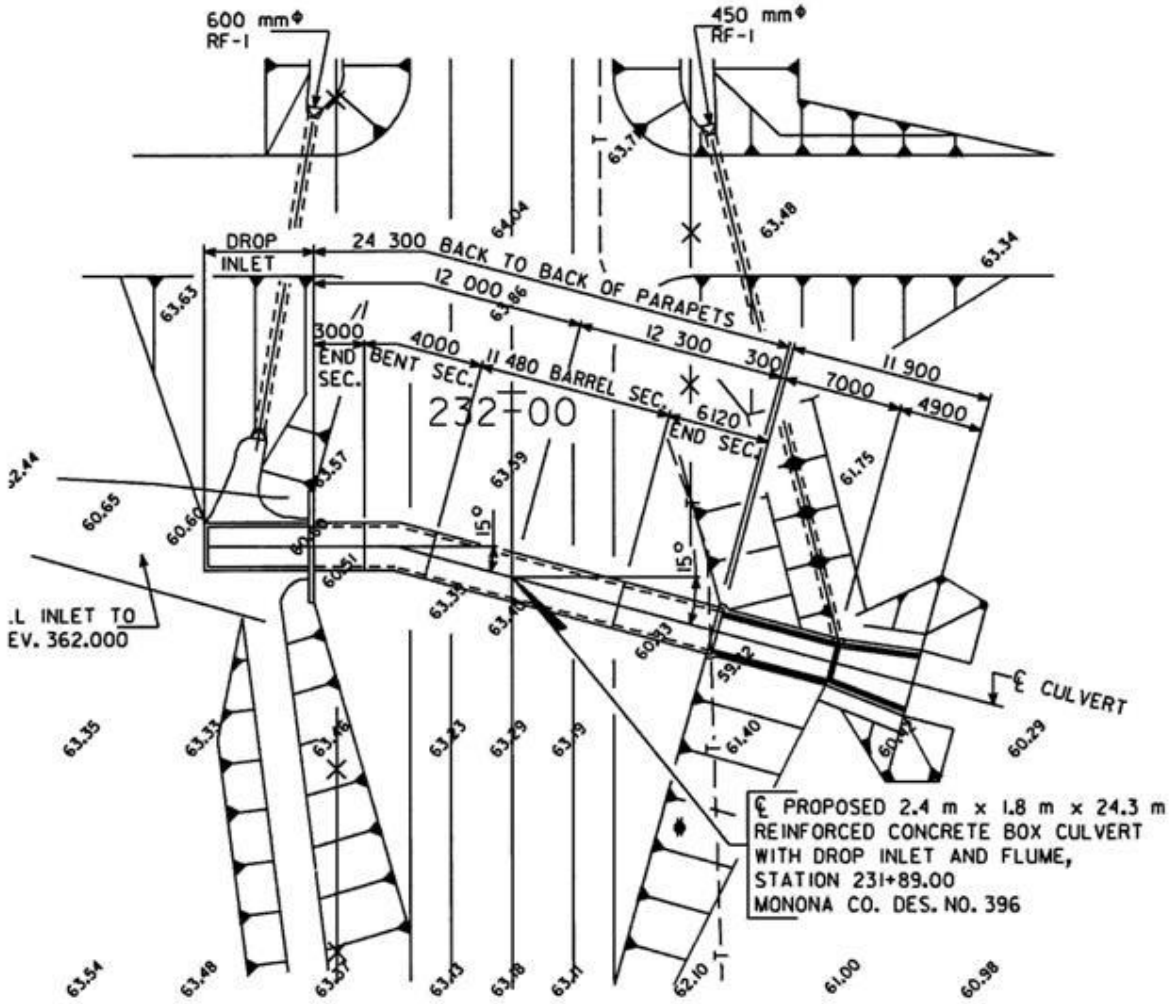

SITUATION PLAN

Typical Drop Inlet Detail

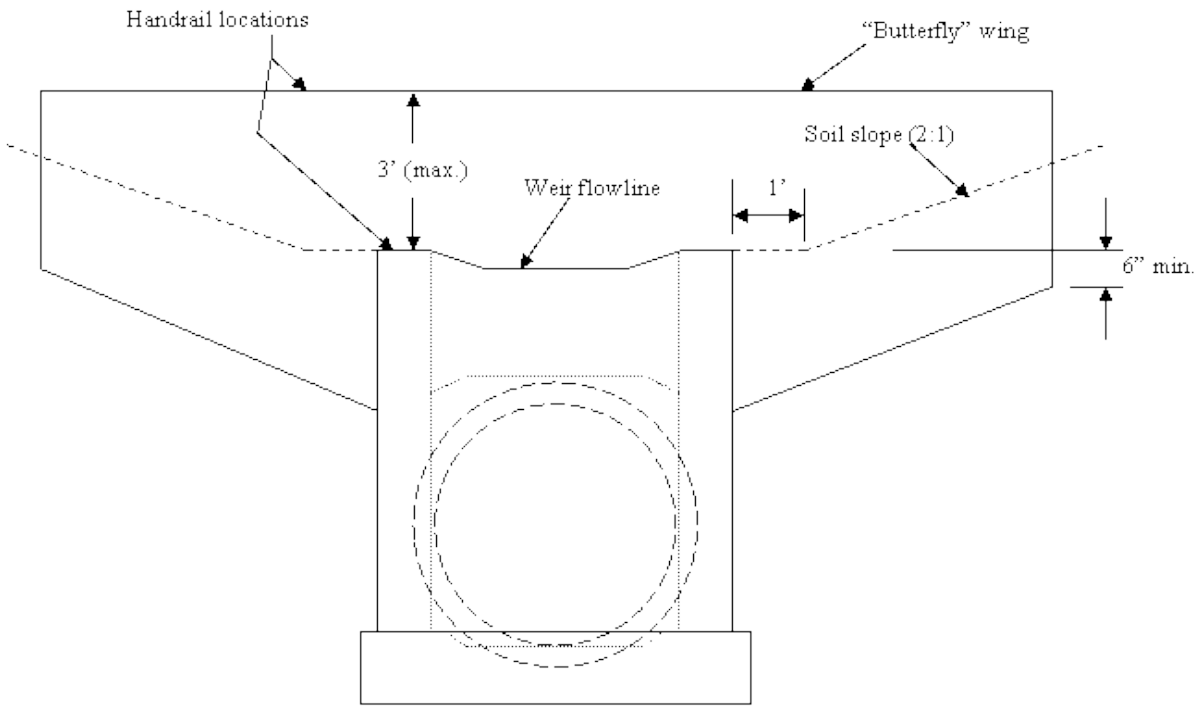

Front view

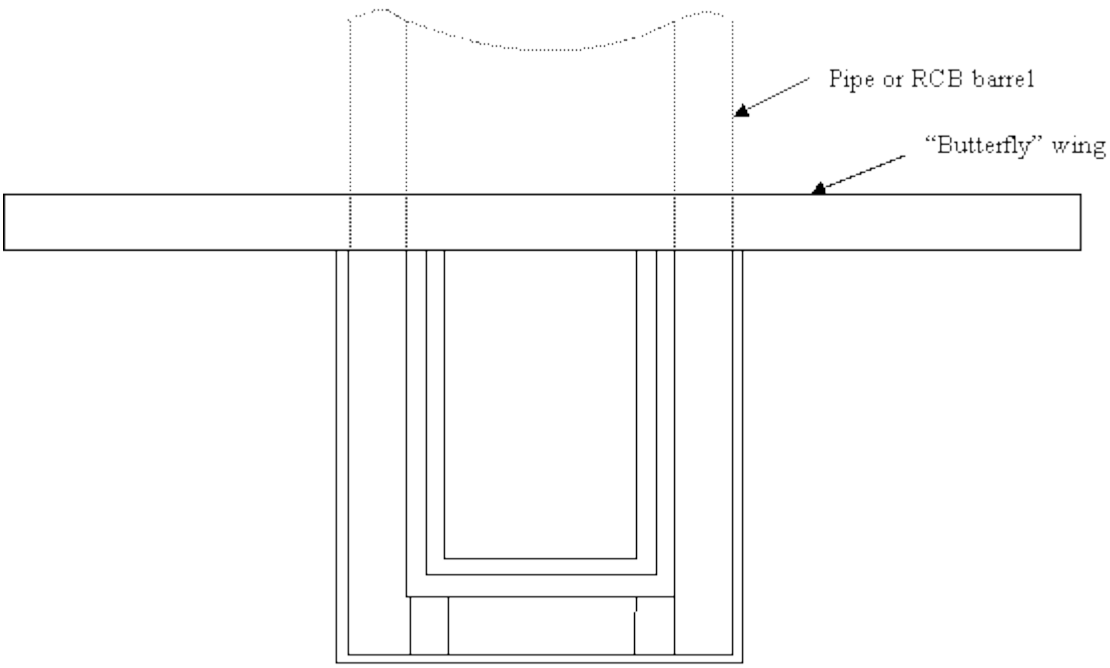

Plan view

Worksheet for Drop Inlet Culverts (English)

Project_____ County_____ Des. No._____

Sta._____ Designer_____ Date_____

	Example	Trial 1	Trial 2	Trial 3	Trial 4
Design Q, ft^3/sec	150				
Allowable HW Elev. (AHW)	108.0				
Barrel Design					
Barrel Size, ft X ft	4 X 4				
A, ft^2	16				
WP, ft	16				
R, ft (= A/WP)	1.0				
L_b, ft	80				
H, ft (Eqn. 1)	3.2				
$(d_c + D)/2$, feet	3.7				
TW, feet	4.0				
h_o, ft (= greater of TW or $(d_c + D)/2$)	4.0				
Barrel Outlet Elev.	100.0				
HW Elev. (=H + h_o + outlet elev.)	107.2				
Acceptable? If no, try a different barrel size.	Yes. HW < AHW.				
Weir Design					
Weir Size, ft X ft	4 X 8				
C	3.09	3.09	3.09	3.09	3.09
L_w, ft	20				
H, ft (Eqn. 3)	1.8				
Weir Elev.	106.0				
HW Elev.	107.8				
Controlling HW Elev.	107.8				
Acceptable? If no, try a different size.	Yes. HW < AHW.				

Appendix H: General Design Inlets Nomenclature

The nomenclature used to describe the same inlet type varies between HY8 (the FHWA culvert software program) and HDS-5. The following table lists the inlet types included in version 3.0 of the software, for Design: General. This software follows the HDS-5 Description. * is used to indicate degrees.

Culvert Type	Software (HDS-5) Inlet Description	HY-8 Inlet Description	HDS-5 Chart-Nomograph
Concrete Pipe	Square edge with headwall	Square edge with headwall	1-1
Concrete Pipe	Groove end with headwall	Grooved end in headwall	1-2
Concrete Pipe	Groove end projecting	Grooved end projection	1-3
Concrete Pipe	Beveled ring, 45*	Beveled Edge (1:1)	3-A
Concrete Pipe	Beveled ring, 33.7*	Beveled Edge (1.5:1)	3-B
Concrete Box	90* headwall, 3/4” chamfers	Headwall, Square edge (90-45 DEG.)	10-1
Concrete Box	90* headwall, 33.7* bevels	Headwall, 1.5:1 Bevel (90 DEG.)	10-3
Concrete Box	90* headwall, 45* bevels	Headwall, 1:1 Bevel	10-2
Concrete Box	30* to 75* wingwall flares	Wingwall, Square Edge (30-75 DEG. FLARE)	8-1
Concrete Box	90* and 15* wingwall flares	Wingwall, Square Edge (90&15 DEG. FLARE	8-2
Concrete Box	0* wingwall flares	Wingwall, Square Edge (DEG. FLARE)	8-3
Concrete Box	18* to 33.7* wingwall flares, d=.083D	Wingwall, 1.5:1 BEVEL (18-34 DEG. FLARE)	9-2
Concrete Box	45* wingwall flare, d=.043D	Wingwall, 1:1 BEVEL (45 DEG. FLARE)	9-1
Metal Pipe	Headwall	Square edge with Headwall	2-1
Metal Pipe	Mitered to slope	Mitered to Conform to Slope	2-2
Metal Pipe	Projecting	Thin edge projecting	2-3
Concrete Pipe Arch	Square edge with headwall	Square edge with headwall	1-1
Concrete Pipe Arch	Groove end with headwall	Grooved end in headwall	1-2
Concrete Pipe Arch	Groove end projecting	Grooved end projection	1-3
Steel Pipe Arch	90* headwall	Headwall	34-1
Steel Pipe Arch	Mitered to slope	Mitered	34-2
Steel Pipe Arch	Projecting	Projecting	34-3

Appendix I: Inlet Control

The equations and coefficients used for inlet control are taken from HDS-5 (Appendix A). The following lists the inlet control equations and coefficients (HDS-5, Table 8 and Table 9, pages 146-148).

Unsubmerged Equations

Form (1)

$$\frac{HW_i}{D} = \frac{H_c}{D} + K\left[\frac{Q}{AD^{0.5}}\right]^M - 0.5S$$

Form (2)

$$\frac{HW_i}{D} = K\left[\frac{Q}{AD^{0.5}}\right]^M$$

Submerged Equation

$$\frac{HW_i}{D} = c\left[\frac{Q}{AD^{0.5}}\right]^2 + Y - 0.5S$$

Notes:

The unsubmerged equations apply up to about $\frac{Q}{AD^{0.5}} = 3.5$. The submerged equation applies above about $\frac{Q}{AD^{0.5}} = 4.0$.

For mitered inlets use +0.7S in place of –0.5S as the slope correction.

Definitions

HW_i	Headwater depth above inlet control section invert
D	Interior height of the culvert barrel
H_c	Specific head at critical depth ($d_c + V_c^2/2g$)
Q	Discharge
A	Full cross sectional area of culvert barrel
S	Culvert barrel slope
K,M,c,Y	Constants from table 9

The following table shows the coefficients for the culvert types and inlets implemented in the software (from Table 9 of HDS-5).

Culvert Type	Inlet Description	HDS-5 Chart-graph	Unsubmerged Equation	K	M	c	Y
Concrete Pipe	Square edge with headwall	1-1	1	0.0098	2	0.0398	0.67
Concrete Pipe	Groove end with headwall	1-2	1	0.0018	2	0.0292	0.74
Concrete Pipe	Groove end projecting	1-3	1	0.0045	2	0.0317	0.69
Concrete Pipe	Beveled ring, 45*	3-A	1	0.0018	2.5	0.03	0.74
Concrete Pipe	Beveled ring, 33.7*	3-B	1	0.0018	2.5	0.0243	0.83
Concrete Box	90* headwall, 3/4” chamfers	10-1	2	0.515	0.667	0.0375	0.79
Concrete Box	90* headwall, 33.7* bevels	10-3	2	0.486	0.667	0.0252	0.865
Concrete Box	90* headwall, 45* bevels	10-2	2	0.495	0.667	0.0314	0.82
Concrete Box	30* to 75* wingwall flares	8-1	1	0.026	1	0.0347	0.86
Concrete Box	90* and 15* wingwall flares	8-2	1	0.061	0.75	0.04	0.8
Concrete Box	0* wingwall flares	8-3	1	0.061	0.75	0.0423	0.82
Concrete Box	18* to 33.7* wingwall flares, d=.083D	9-2	2	0.486	0.667	0.0249	0.83
Concrete Box	45* wingwall flare, d=.043D	9-1	2	0.51	0.667	0.0309	0.8
Metal Pipe	Headwall	2-1	1	0.0078	2	0.0379	0.69
Metal Pipe	Mitered to slope	2-2	1	0.021	1.33	0.0463	0.75
Metal Pipe	Projecting	2-3	1	0.034	1.5	0.0553	0.54
Concrete Pipe Arch	Square edge with headwall	1-1	1	0.0098	2	0.0398	0.67
Concrete Pipe Arch	Groove end with headwall	1-2	1	0.0018	2	0.0292	0.74
Concrete Pipe Arch	Groove end projecting	1-3	1	0.0045	2	0.0317	0.69
Steel Pipe Arch	90* headwall	34-1	1	0.0083	2	0.0379	0.69
Steel Pipe Arch	Mitered to slope	34-2	1	0.03	1	0.0463	0.75
Steel Pipe Arch	Projecting	34-3	1	0.034	1.5	0.0496	0.57

Appendix J: Outlet Control

Outlet control computations are done as part of the computations for Drop Inlet Design and General Culvert Design. The methods and assumptions used follow those of Hydraulic Design Series 5. Please see HDS-5 for detailed information. This appendix provides an over view of the Outlet Control computations used in the software.

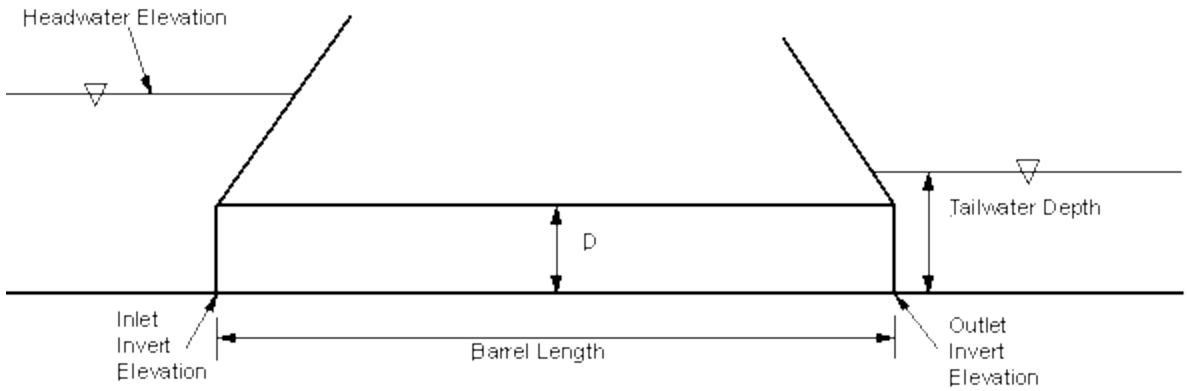

Barrel Friction Loss

The approximate method assumes full pipe flow. The barrel head loss is computed from,

$$H_f = SL$$

Where H_f is the head loss in the culvert barrel, S is the slope of the energy grade line and L is the length of the culvert barrel. The slope of the energy grade line is computed using the Manning equation,

$$Q = \frac{1.49}{n} AR^{2/3} S^{1/2}$$

where A is the cross-sectional flow area, R is the hydraulic radius and n is the Manning coefficient. The hydraulic radius is the flow area (A) divided by the wetted perimeter (P), R=A/P. For the approximate method, A and P are computed assuming the culvert is flowing full. Solving the Manning equation for S gives,

$$S = \left(\frac{Qn}{1.49AR^{2/3}}\right)^2$$

Entrance Loss

The entrance loss is estimated from,

$$H_e = K_e \frac{V^2}{2g}$$

where K_e is the entrance loss coefficient, and V is the barrel velocity, assuming full culvert flow.

Exit Loss

The exit loss is estimated from,

$$H_o = 1.0\left(\frac{V^2}{2g} - \frac{V_d^2}{2g}\right)$$

where V_d is the channel velocity downstream of the culvert. The downstream velocity is usually neglected, so the exit loss is usually computed as,

$$H_o = \frac{V^2}{2g}$$

Writing the energy equation from the inlet to the outlet,

$$HW - H_e - H_f - H_o = TW + O_e$$

Where O_e is the outlet invert elevation, TW is the tailwater depth above the outlet invert, and HW is the headwater elevation at the inlet.

In the approximate HDS-5 method, the elevation where the total head line crosses the outlet is adjusted to account for partly full flow. The headwater elevation, under outlet control, is computed from,

$$HW = O_e + h_o + H_e + H_f + H_o$$

where,

$h_o = \frac{(d_c+D)}{2}$ or TW (whichever is larger)

where d_c is critical depth in the barrel and D is the inside height of the culvert barrel.

HDS-5 notes that the approximate method gives satisfactory results down to a headwater depth of about 0.75D. For accurate results when the headwater depth at the inlet is less than 0.75D water surface profile computations are required.

This software does not compute water surface profiles, but uses the HDS-5 approximate method for computing the headwater elevation under outlet control.

Appendix K: Exit Velocity

The software follows the assumptions of HDS-5 for estimating the velocity at the barrel outlet. The two figures shown below are taken from HDS-5.

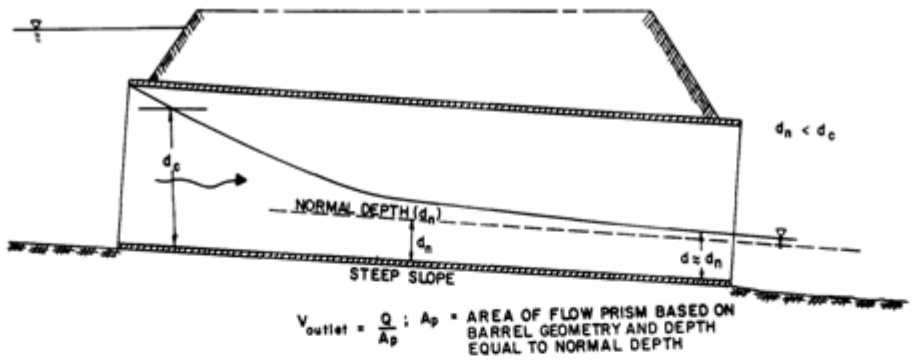

Figure III-13--Outlet velocity - inlet control.

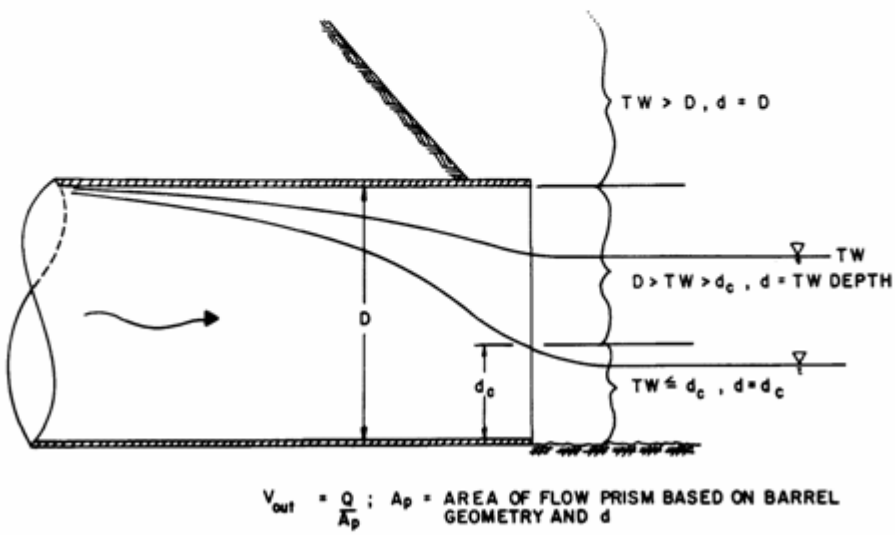

Figure III-14--Outlet velocity - outlet control.

In the case of inlet control, the depth at the outlet is assumed to be normal depth, for the purposes of calculating the outlet velocity. For outlet control, the depth, d, assumed for the purposes of estimating the outlet (exit) velocity is shown in the figure above.

Appendix L: IDOT Standard Sizes

The following tables show the Iowa DOT standard sizes for selected culvert types, along with some non-standard combinations (mainly for multiple barrels). All the sizes shown are evaluated when the software determines acceptable culverts under “Culvert”, “IDOT Standard Design”. The sizes shown are also displayed as “IDOT Standard Sizes” under “Culvert”, “General Design”.

IA DOT Standard Sizes: Concrete Box

Standard	Barrels	Width (ft)	Height (ft)
Yes	Single	3	3
Yes	Single	4	4
Yes	Single	5	3
Yes	Single	5	4
Yes	Single	5	5
Yes	Single	5	6
Yes	Single	6	3
Yes	Single	6	4
Yes	Single	6	5
Yes	Single	6	6
Yes	Single	6	8
Yes	Single	8	4
Yes	Single	8	5
Yes	Single	8	6
Yes	Single	8	7
Yes	Single	8	8
Yes	Single	8	9
Yes	Single	8	10
Yes	Single	10	4
Yes	Single	10	5
Yes	Single	10	6
Yes	Single	10	7
Yes	Single	10	8
Yes	Single	10	9
Yes	Single	10	10
Yes	Single	10	11
Yes	Single	10	12
Yes	Single	12	4
Yes	Single	12	5
Yes	Single	12	6
Yes	Single	12	7
Yes	Single	12	8
Yes	Single	12	9
Yes	Single	12	10
Yes	Single	12	11
Yes	Single	12	12
Yes	Twin	8	4
Yes	Twin	8	5
Yes	Twin	8	6
Yes	Twin	8	7
Yes	Twin	8	8
Yes	Twin	8	9
Yes	Twin	8	10
Yes	Twin	10	4

Yes	Twin	10	5
Yes	Twin	10	6
Yes	Twin	10	7
Yes	Twin	10	8
Yes	Twin	10	9
Yes	Twin	10	10
Yes	Twin	10	11
Yes	Twin	10	12
Yes	Twin	12	4
Yes	Twin	12	5
Yes	Twin	12	6
Yes	Twin	12	7
Yes	Twin	12	8
Yes	Twin	12	9
Yes	Twin	12	10
Yes	Twin	12	11
Yes	Twin	12	12
Yes	Triple	10	4
Yes	Triple	10	5
Yes	Triple	10	6
Yes	Triple	10	7
Yes	Triple	10	8
Yes	Triple	10	9
Yes	Triple	10	10
Yes	Triple	10	11
Yes	Triple	10	12
Yes	Triple	12	4
Yes	Triple	12	5
Yes	Triple	12	6
Yes	Triple	12	7
Yes	Triple	12	8
Yes	Triple	12	9
Yes	Triple	12	10
Yes	Triple	12	11
Yes	Triple	12	12

IA DOT Standard Sizes: Concrete Pipe

Standard	Barrels	Diameter (inches)
Yes	Single	12
Yes	Single	15
Yes	Single	18
Yes	Single	24
Yes	Single	30
Yes	Single	36
Yes	Single	42
Yes	Single	48
Yes	Single	54
Yes	Single	60
Yes	Single	66
Yes	Single	72
Yes	Single	78
Yes	Single	84
No	Twin	12
No	Twin	15
No	Twin	18
No	Twin	24

No	Twin	30
No	Twin	36
No	Twin	42
No	Twin	48
No	Twin	54
No	Twin	60
No	Twin	66
No	Twin	72
No	Twin	78
No	Twin	84
No	Triple	12
No	Triple	15
No	Triple	18
No	Triple	24
No	Triple	30
No	Triple	36
No	Triple	42
No	Triple	48
No	Triple	54
No	Triple	60
No	Triple	66
No	Triple	72
No	Triple	78
No	Triple	84

IA DOT Standard Sizes: Corrugated Metal Pipe

Standard	Barrels	Diameter (inches)
Yes	Single	12
Yes	Single	15
Yes	Single	18
Yes	Single	24
Yes	Single	30
Yes	Single	36
Yes	Single	42
Yes	Single	48
Yes	Single	54
Yes	Single	60
Yes	Single	66
Yes	Single	72
Yes	Single	78
Yes	Single	84
No	Twin	12
No	Twin	15
No	Twin	18
No	Twin	24
No	Twin	30
No	Twin	36
No	Twin	42
No	Twin	48
No	Twin	54
No	Twin	60
No	Twin	66
No	Twin	72
No	Twin	78
No	Twin	84
No	Triple	12
No	Triple	15
No	Triple	18
No	Triple	24
No	Triple	30
No	Triple	36
No	Triple	42
No	Triple	48
No	Triple	54
No	Triple	60
No	Triple	66
No	Triple	72
No	Triple	78
No	Triple	84

IA DOT Standard Sizes: Concrete Pipe Arch (Standard Road Plan, RF-41)

Standard	Barrels	Nominal Dimensions Span x Rise (inches)	Span (in.)	Rise (in.)	Bottom Radius (in)	Top Radius (in)	Corner Radius (in)
Yes	Single	22 x 14	22	13 1/2	27 1/2	13 3/4	5 ¼
Yes	Single	29 x 18	28 1/2	18	40 11/16	14 9/16	4 19/32
Yes	Single	37 x 23	36 1/4	22 1/2	51	18 3/4	6 1/32
Yes	Single	44 x 27	43 3/4	26 5/8	62	22 1/2	6 3/8
Yes	Single	52 x 32	51 1/8	31 5/16	73	26 1/4	7 9/16
Yes	Single	59 x 36	58 1/2	36	84	30	8 3/4
Yes	Single	65 x 40	65	40	92 1/2	33 3/8	9 13/16
Yes	Single	73 x 45	73	45	105	37 1/2	11 7/32
Yes	Single	88 x 54	88	54	126	45	12 9/16
Yes	Single	102 x 62	102	62	162 1/2	52	13 31/32
Yes	Single	115 x 72	115	72	183	59	19 9/32
Yes	Single	122 x 78	122	77 1/4	218	62	20 1/16
Yes	Single	138 x 88	138	87 1/8	269	70	22 3/8
Yes	Single	154 x 97	154	96 7/8	301 3/8	78	24
Yes	Single	169 x 107	168 3/4	106 1/2	329	85 5/8	26 7/8
No	Twin	22 x 14	22	13 1/2	27 1/2	13 3/4	5 ¼
No	Twin	29 x 18	28 1/2	18	40 11/16	14 9/16	4 19/32
No	Twin	37 x 23	36 1/4	22 1/2	51	18 3/4	6 1/32
No	Twin	44 x 27	43 3/4	26 5/8	62	22 1/2	6 3/8
No	Twin	52 x 32	51 1/8	31 5/16	73	26 1/4	7 9/16
No	Twin	59 x 36	58 1/2	36	84	30	8 3/4
No	Twin	65 x 40	65	40	92 1/2	33 3/8	9 13/16
No	Twin	73 x 45	73	45	105	37 1/2	11 7/32
No	Twin	88 x 54	88	54	126	45	12 9/16
No	Twin	102 x 62	102	62	162 1/2	52	13 31/32
No	Twin	115 x 72	115	72	183	59	19 9/32
No	Twin	122 x 78	122	77 1/4	218	62	20 1/16
No	Twin	138 x 88	138	87 1/8	269	70	22 3/8
No	Twin	154 x 97	154	96 7/8	301 3/8	78	24
No	Twin	169 x 107	168 3/4	106 1/2	329	85 5/8	26 7/8
No	Triple	22 x 14	22	13 1/2	27 1/2	13 3/4	5 ¼
No	Triple	29 x 18	28 1/2	18	40 11/16	14 9/16	4 19/32
No	Triple	37 x 23	36 1/4	22 1/2	51	18 3/4	6 1/32
No	Triple	44 x 27	43 3/4	26 5/8	62	22 1/2	6 3/8
No	Triple	52 x 32	51 1/8	31 5/16	73	26 1/4	7 9/16
No	Triple	59 x 36	58 1/2	36	84	30	8 3/4
No	Triple	65 x 40	65	40	92 1/2	33 3/8	9 13/16
No	Triple	73 x 45	73	45	105	37 1/2	11 7/32
No	Triple	88 x 54	88	54	126	45	12 9/16
No	Triple	102 x 62	102	62	162 1/2	52	13 31/32
No	Triple	115 x 72	115	72	183	59	19 9/32
No	Triple	122 x 78	122	77 1/4	218	62	20 1/16
No	Triple	138 x 88	138	87 1/8	269	70	22 3/8
No	Triple	154 x 97	154	96 7/8	301 3/8	78	24
No	Triple	169 x 107	168 3/4	106 1/2	329	85 5/8	26 7/8

IA DOT Standard Sizes: Steel Pipe Arch (2 2/3” x ½” Corrugations) (Standard Road Plan, RF-33)

Standard	Barrels	Span (in.)	Rise (in.)	Bottom Radius (in)	Top Radius (in)	Corner Radius (in)
Yes	Single	17	13	25.625	8.625	3.5
Yes	Single	21	15	33.125	10.75	4.13
Yes	Single	24	18	34.625	11.875	4.875
Yes	Single	28	20	42.25	14	5.5
Yes	Single	35	24	55.125	17.875	6.875
Yes	Single	42	29	66.125	21.5	8.25
Yes	Single	49	33	77.25	25.125	9.625
Yes	Single	57	38	88.25	28.625	11
Yes	Single	64	43	99.25	32.25	12.375
Yes	Single	71	47	110.25	35.75	13.75
Yes	Single	77	52	121.25	39.375	15.125
Yes	Single	83	57	132.25	43	16.25
No	Twin	17	13	25.625	8.625	3.5
No	Twin	21	15	33.125	10.75	4.13
No	Twin	24	18	34.625	11.875	4.875
No	Twin	28	20	42.25	14	5.5
No	Twin	35	24	55.125	17.875	6.875
No	Twin	42	29	66.125	21.5	8.25
No	Twin	49	33	77.25	25.125	9.625
No	Twin	57	38	88.25	28.625	11
No	Twin	64	43	99.25	32.25	12.375
No	Twin	71	47	110.25	35.75	13.75
No	Twin	77	52	121.25	39.375	15.125
No	Twin	83	57	132.25	43	16.25
No	Triple	17	13	25.625	8.625	3.5
No	Triple	21	15	33.125	10.75	4.13
No	Triple	24	18	34.625	11.875	4.875
No	Triple	28	20	42.25	14	5.5
No	Triple	35	24	55.125	17.875	6.875
No	Triple	42	29	66.125	21.5	8.25
No	Triple	49	33	77.25	25.125	9.625
No	Triple	57	38	88.25	28.625	11
No	Triple	64	43	99.25	32.25	12.375
No	Triple	71	47	110.25	35.75	13.75
No	Triple	77	52	121.25	39.375	15.125
No	Triple	83	57	132.25	43	16.25

IA DOT Standard Sizes: Steel Pipe Arch (3” x 1” and 5” x 1” Corrugations)

Standard	Barrels	Span (in.)	Rise (in.)	Bottom Radius (in)	Top Radius (in)	Corner Radius (in)
Yes	Single	60	46	51.125	29.375	18.75
Yes	Single	66	51	56.25	32.625	20.75
Yes	Single	73	55	63.75	36.75	22.875
Yes	Single	81	59	82.625	39.5	20.875
Yes	Single	87	63	92.25	43.375	22.625
Yes	Single	95	67	100.25	47.0	24.375
Yes	Single	103	71	111.625	51.25	26.125
Yes	Single	112	75	120.25	54.875	27.75
Yes	Single	117	79	131.75	59.375	29.5
Yes	Single	128	83	139.75	63.25	31.25
No	Twin	60	46	51.125	29.375	18.75
No	Twin	66	51	56.25	32.625	20.75
No	Twin	73	55	63.75	36.75	22.875
No	Twin	81	59	82.625	39.5	20.875
No	Twin	87	63	92.25	43.375	22.625
No	Twin	95	67	100.25	47.0	24.375
No	Twin	103	71	111.625	51.25	26.125
No	Twin	112	75	120.25	54.875	27.75
No	Twin	117	79	131.75	59.375	29.5
No	Twin	128	83	139.75	63.25	31.25
No	Triple	60	46	51.125	29.375	18.75
No	Triple	66	51	56.25	32.625	20.75
No	Triple	73	55	63.75	36.75	22.875
No	Triple	81	59	82.625	39.5	20.875
No	Triple	87	63	92.25	43.375	22.625
No	Triple	95	67	100.25	47.0	24.375
No	Triple	103	71	111.625	51.25	26.125
No	Triple	112	75	120.25	54.875	27.75
No	Triple	117	79	131.75	59.375	29.5
No	Triple	128	83	139.75	63.25	31.25

Appendix M: NE Scour Hole Design Methodology

The equations used to determine the basin size for the NE Scour Hole design are described below.

The Nebraska (NE) scour hole design methodology and the following discussion is taken from the Nebraska Department of Roads, Roadway Design Manual, chapter Five: Erosion and Sedimentation Control, with reference to 5.5.27.1 Scour Hole.

A scour hole is a preformed excavated hole or depression which is lined with riprap of a stable size to prevent scouring. The depression provides both vertical and lateral expansion downstream of the culvert outlet to permit dissipation of excessive energy. A significant reduction in the size of the riprap stone is achieved by the excavation.

Two types of preformed scour holes can be constructed. The first type of scour hole is depressed one-half of the culvert diameter (or span). The second type is depressed the full culvert diameter (or span). The design of preformed scour holes is based upon research conducted by the U.S. Army Corps of Engineers.

Empirical equations developed for the hydraulic design of preformed scour holes are presented below. Equations are applicable to both circular and rectangular culverts flowing full or partly full. The software uses the equations shown to calculate the basin dimensions.

For a scour hole depressed ½ the culvert span:

$$D_{50} = \left(\frac{0.0275 D_o^2}{TW}\right)\left(\frac{Q}{D_o^{2.5}}\right)^{4/3}$$

in English units,

$$D_{50} = \left(\frac{0.0125 D_o^2}{TW}\right)\left(\frac{Q}{D_o^{2.5}}\right)^{4/3}$$

where:

D_{50} = Minimum average stone diameter required for scour holes depressed one-half the culvert span, meter (ft)

D_0 = culvert diameter or span, meter (ft)

TW = tail water depth above culvert invert, meter (ft)

Q = discharge, m^3/s (ft^3/s)

For a scour hole depressed the full culvert span use:

$$D_{50} = \left(\frac{0.0181 D_o^2}{TW}\right)\left(\frac{Q}{D_o^{2.5}}\right)^{4/3}$$

in English units:

$$D_{50} = \left(\frac{0.0082 D_o^2}{TW}\right)\left(\frac{Q}{D_o^{2.5}}\right)^{4/3}$$

where:

D_{50} = Minimum average stone diameter required for scour holes depressed the full culvert span, meter (ft)

Dimensions for a scour hole basin are shown in the NE Scour Hole Plot, and are determined from:

$A = 2D_0 + 6F$
$C = 3D_0 + 6F$
$D = 2D_{50}$
$E = D_0$
$F = 0.5D_0$ or D_0

Where:

A = basin inlet width and basin outlet width, meter (ft)
C = basin length, meter (ft)
D = thickness of riprap lining, meter (ft)
E = culvert diameter or span, meter (ft)
F = basin depression, meter (ft).

Appendix N: NE Plunge Basin

The following table used for determining dimensions for the NE Plunge Basin is adapted from the Roadway Design Manual, Nebraska Department of Roads, Chapter Five, Table 5.9 Plunge Basin Dimensions, page 5-43, December 1996.

Pipe Diameter mm (inches)	Basin Dimensions, m (ft)														
	V ≤ 5.5 m/s (18 fps)					5.5 m/s (18 fps) < V ≤ 7.3 m/s (24 fps)					7.3 m/s (24 fps) < V ≤ 9.1 m/s (30 fps)				
	A	C	E	T	F	A	C	E	T	F	A	C	E	T	F
600 (24)	1 (3)	0.5 (1.5)	1 (3)	0.5 (1.5)	1.2 (4)	1 (3)	0.5 (1.5)	1.5 (5)	0.5 (1.5)	1.2 (4)	1.2 (4)	0.6 (2)	2.1 (7)	0.5 (1.5)	1.2 (4)
750 (30)	1 (3)	0.5 (1.5)	1 (3)	0.6 (2)	1.2 (4)	1 (3)	0.5 (1.5)	1.5 (5)	0.6 (2)	1.2 (4)	1.2 (4)	0.6 (2)	2.1 (7)	0.6 (2)	1.2 (4)
900 (36)	1 (3)	0.5 (1.5)	1 (3)	0.8 (2.5)	1.5 (5)	1 (3)	0.5 (1.5)	1.5 (5)	0.8 (2.5)	1.5 (5)	1.2 (4)	0.6 (2)	2.1 (7)	0.8 (2.5)	1.5 (5)
1050 (42)	1 (3)	0.5 (1.5)	1 (3)	1 (3)	1.5 (5)	1 (3)	0.5 (1.5)	1.5 (5)	1 (3)	1.5 (5)	1.2 (4)	0.6 (2)	2.1 (7)	1 (3)	1.5 (5)
1200 (48)	1 (3)	0.5 (1.5)	1 (3)	1 (3)	1.8 (6)	1.2 (4)	0.6 (2)	1.5 (5)	1 (3)	1.8 (6)	1.5 (5)	0.8 (2.5)	2.1 (7)	1 (3)	1.8 (6)
1350 (54)	1 (3)	0.5 (1.5)	1 (3)	1.2 (4)	2.1 (7)	1.2 (4)	0.6 (2)	1.5 (5)	1.2 (4)	2.1 (7)	1.5 (5)	0.8 (2.5)	2.1 (7)	1.2 (4)	2.1 (7)
1500 (60)	1.2 (4)	0.6 (2)	1 (3)	1.2 (4)	2.4 (8)	1.2 (4)	0.6 (2)	1.5 (5)	1.2 (4)	2.4 (8)	1.8 (6)	1 (3)	2.1 (7)	1.2 (4)	2.4 (8)
1650 (66)	1.2 (4)	0.6 (2)	1 (3)	1.5 (5)	2.4 (8)	1.5 (5)	0.8 (2.5)	1.5 (5)	1.5 (5)	2.4 (8)	1.8 (6)	1 (3)	2.1 (7)	1.5 (5)	2.4 (8)
1800 (72)	1.2 (4)	0.6 (2)	1 (3)	1.5 (5)	2.7 (9)	1.5 (5)	0.8 (2.5)	1.5 (5)	1.5 (5)	2.7 (9)	1.8 (6)	1 (3)	2.1 (7)	1.5 (5)	2.7 (9)
2100 (84)	1.5 (5)	0.8 (2.5)	1 (3)	1.7 (5.5)	3.4 (11)	1.8 (6)	1 (3)	1.5 (5)	1.7 (5.5)	3.4 (11)	2.1 (7)	1.1 (3.5)	2.1 (7)	1.7 (5.5)	3.4 (11)
2400 (96)	1.8 (6)	1 (3)	1 (3)	1.8 (6)	3.7 (12)	2.1 (7)	1.1 (3.5)	1.5 (5)	1.8 (6)	3.7 (12)	2.4 (8)	1.2 (4)	2.1 (7)	1.8 (6)	3.7 (12)
Riprap Dimensions, mm (inches)															
	Riprap Size		Riprap Thickness			Riprap Size		Riprap Thickness			Riprap Size		Riprap Thickness		
	400 (16)		500 (16)			600 (24)		600 (24)			600 (24) Class B		750 (30)		
Values used by IA Culvert Software															
	(12) Class E		(24)			(18) Class B		(36)			(18) Class B		(36)		

Appendix O: Hec-14 Riprap Basin

The design methods used for the Hec-14 Riprap Basin are based on methods from Hydraulic Engineering Circular No. 14 (Hec-14), Hydraulic Design of Energy Dissipators for Culvers and Channels, U.S. Department of Transportation, Federal Highway Administration, September 1983. For details on the derivation of the methodology please see the above manual, in particular Chapter XI. You can download a copy of the Hec-14 manual at http://www.fhwa.dot.gov/bridge/hydpub.htm.

General details of the HEC-14 Riprap Basin are shown on the Hec-14 Riprap Basin Design Plot.

The general design approach used by the method is:

The critical depth and normal depth for the culvert are determined.

Brink depth: Yo

If the culvert flow conditions are hydraulically steep (supercritical flow), the brink depth (Yo) is determined using normal depth, or the tailwater depth, whichever is larger. If the tailwater depth exceeds the culvert rise, the brink depth is the culvert rise.

If the culvert flow is not hydraulically steep (subcritical flow), figure III-9 or III-10 from Hec-14 (shown below as Figures 1 and 2) are used to find Yo/D, where D is the culvert span. There is not an equivalent figure in Hec 14 for arch pipes. For arch pipes, critical depth is used for Yo.

Brink Flow Area:

The brink flow area is determined from the culvert geometry and the brink depth.

Exit velocity: Vo

The exit velocity is the design Q divided by the Brink Flow area.

Equivalent Brink Depth: Ye

For rectangular culverts, Ye=Yo.

For non-rectangular culverts, $Ye=(A/2)^{1/2}$, where A is the Brink Flow Area.

Froude Number

The Froude Number is determined as

$$\text{Froude Number} = \frac{V_o}{\sqrt{32.2Y_e}}$$

Finding d50

Using the value of Ye and the Froude Number, finding an acceptable combination of d50 (median riprap size) and hs (the depth of the riprap basin) is a trial and error process.

The process is:

Guess a d50 value. Compute d50/Ye. Using figure XI-2 of Hec 14 (shown as figure 3 below), find the ratio of hs/Ye. Compute hs. Compute the ratio of hs/d50. If the ratio of hs/d50 is between 2 and 4 the d50 is acceptable (according to Hec-14). If the ratio of hs/d50 is not between 2 and 4, try another value of d50.

The software automatically iterates through trial values of d50 to find a d50 such that hs/d50 is between 2 and 4, if one exists. The software tries d50 values in 0.1 foot increments. If more than one value of d50 results in a value of hs/d50 between 2 and 4, the d50 that results in hs/d50 closest to 3 is displayed as the solution.

Modification from Hec-14:

The software uses figure XI-2 from Hec-14 (Figure 3 below) in a modified manner. The lines on the figure each apply to a range of d50/Ye, as shown. This can lead to a large change in the hs/Ye value with a small change in d50/Ye (for example, d50/Ye of 0.3 versus 0.31). This can also make it difficult to find a feasible hs/d50.

To address these problems, the software applies the midpoint of the range to each line on the figure and uses linear interpolation to estimate values of hs/Ye.

For example:

the line for $0.21 \leq \frac{d50}{Y_e} \leq 0.30$ is assigned a value of d50/Ye=0.25

the line for $0.31 \leq \frac{d50}{Y_e} \leq 0.40$ is assigned a value of d50/Ye=0.35

For values of d50/Ye that fall between the values assigned to these 2 lines, vertical linear interpolation is used to estimate the value of hs/Ye.

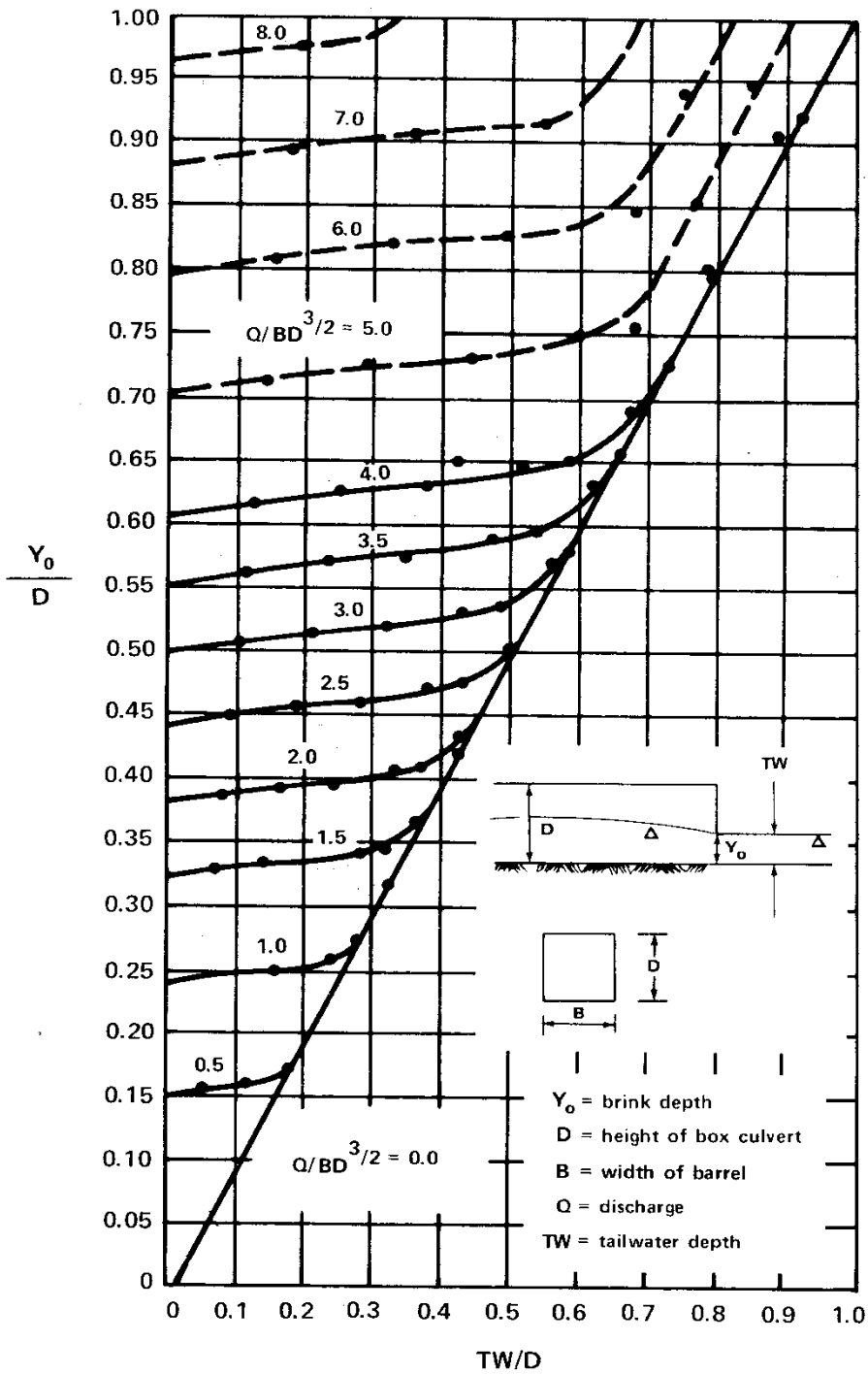

Figure III-9 Dimensionless Rating Curves for the Outlets of Rectangulars Culverts on Horizontal and Mild Slopes from Reference III-2

III-14

Figure 1: Figure III-9 from Hec-14

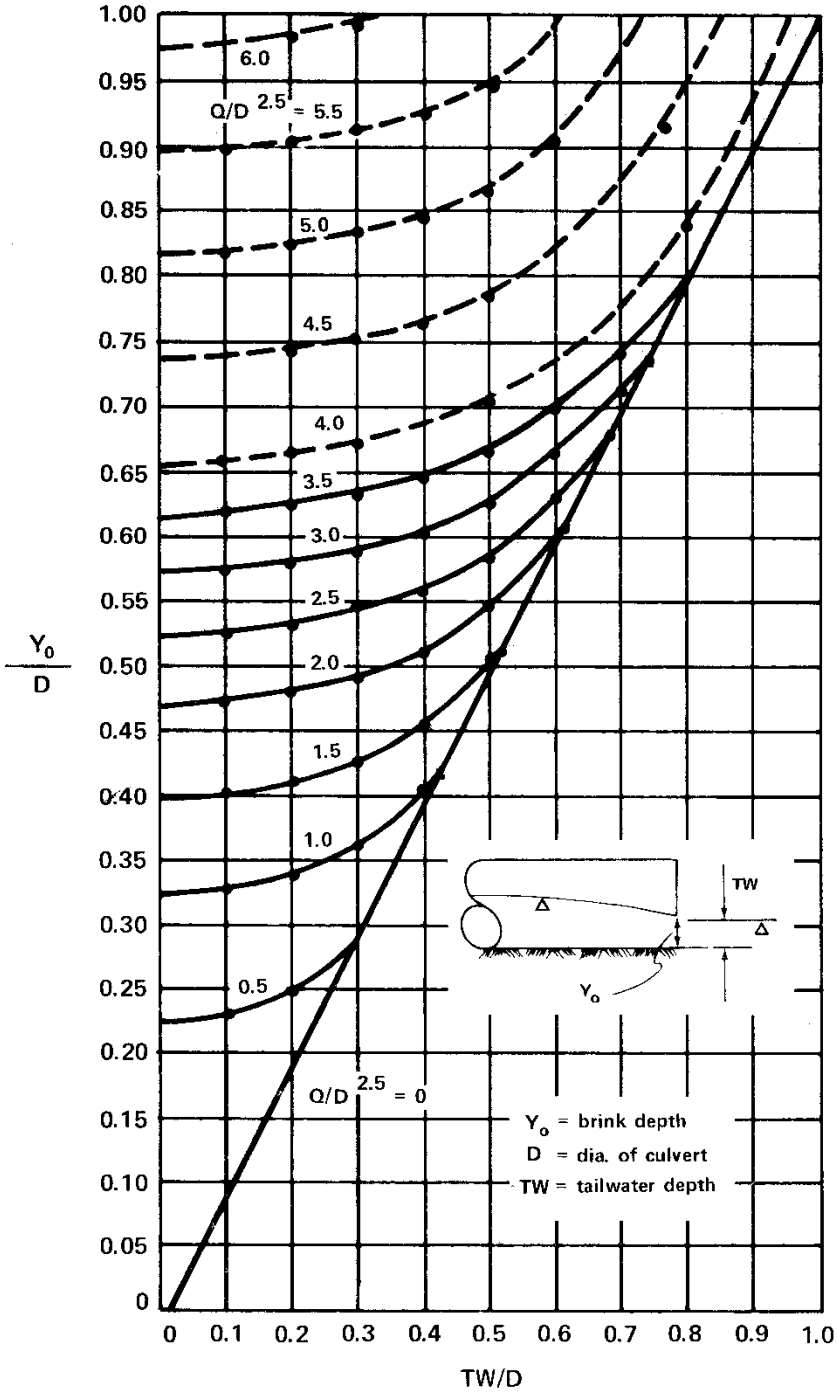

Figure III-10 Dimensionless Rating Curve for the Outlets of Circular Culverts on Horizontal and Mild Slopes from Reference III-2

III-15

Figure 2: Figure III-10 from Hec-14

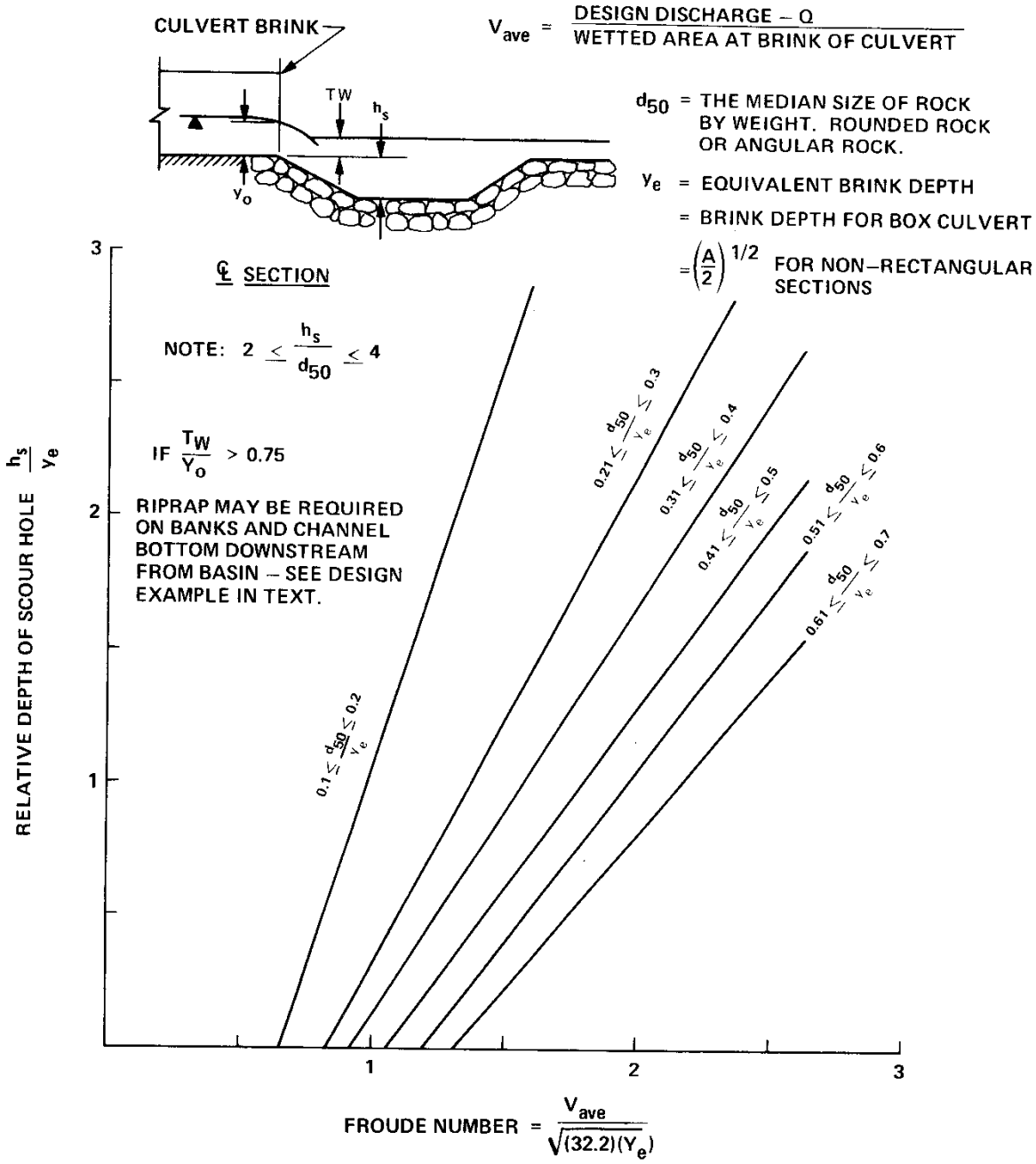

FIGURE X1–2. RELATIVE DEPTH OF SCOUR HOLE VERSUS FROUDE NUMBER AT BRINK OF CULVERT WITH RELATIVE SIZE OF RIPRAP AS A THIRD VARIABLE

XI–14

Figure 3: Figure XI-2 from Hec-14