IOWA DOT
Highway Division

H40–14 THREE SPAN PRETENSIONED PRESTRESSED CONCRETE BEAM BRIDGE STANDARDS

INDEX FOR H40-14 STANDARDS:

H40-01-14	INDEX SHEET
H40-01A-14	GENERAL NOTES
H40-02-14	GENERAL INFORMATION
H40-03-14	SUPERSTRUCTURE DETAILS
H40-04-14	SUPERSTRUCTURE DETAILS-MISC.
H40-05-14	ABUTMENT DETAILS FOR 0° SKEW, A & B BEAMS
H40-14-14	ABUTMENT DETAILS FOR 0° SKEW, C BEAMS
H40-07-14	LONGITUDINAL SECTION FOR 0° SKEW, A & B BEAMS
H40-08-14	LONGITUDINAL SECTION FOR 0° SKEW, C BEAMS
H40-09-14	SUPERSTRUCTURE DETAILS FOR 0° SKEW
H40-10-14	DECK & ABUTMENT REINF. FOR 0° SKEW
H40-11-14	ABUTMENT DETAILS FOR 15° SKEW, A & B BEAMS
H40-12-14	ABUTMENT DETAILS FOR 15° SKEW, C BEAMS
H40-13-14	LONGITUDINAL SECTION FOR 15° SKEW, A & B BEAMS
H40-14-14	LONGITUDINAL SECTION FOR 15° SKEW, C BEAMS
H40-15-14	SUPERSTRUCTURE DETAILS FOR 15° SKEW
H40-16-14	DECK & ABUTMENT REINF. FOR 15° SKEW
H40-17-14	ADDITIONAL QUANTITIES FOR 15° SKEW
H40-18-14	ABUTMENT DETAILS FOR 30° SKEW, A & B BEAMS
H40-19-14	ABUTMENT DETAILS FOR 30° SKEW, C BEAMS
H40-20-14	LONGITUDINAL SECTION FOR 30° SKEW, A & B BEAMS
H40-21-14	LONGITUDINAL SECTION FOR 30° SKEW, C BEAMS
H40-22-14	SUPERSTRUCTURE DETAILS FOR 30° SKEW
H40-23-14	DECK & ABUTMENT REINF. FOR 30° SKEW
H40-24-14	ADDITIONAL QUANTITIES FOR 30° SKEW
H40-25-14	ABUTMENT DETAILS FOR 45° SKEW, A & B BEAMS
H40-26-14	ABUTMENT DETAILS FOR 45° SKEW, C BEAMS
H40-27-14	LONGITUDINAL SECTION FOR 45° SKEW, A & B BEAMS
H40-28-14	LONGITUDINAL SECTION FOR 45° SKEW, C BEAMS
H40-29-14	SUPERSTRUCTURE DETAILS FOR 45° SKEW
H40-30-14	DECK & ABUTMENT REINF. FOR 45° SKEW
H40-31-14	ADDITIONAL QUANTITIES FOR 45° SKEW
H40-32-14	A BEAM DETAILS
H40-33-14	A BEAM DETAILS
H40-34-14	B BEAM DETAILS
H40-35-14	B BEAM DETAILS
H40-36-14	C BEAM DETAILS
H40-37-14	C BEAM DETAILS
H40-38-14	INTERMEDIATE STEEL DIAPHRAGMS
H40-39-14	BARRIER RAIL DETAILS 1 OF 3
H40-40-14	BARRIER RAIL DETAILS 2 OF 3
H40-41-14	BARRIER RAIL DETAILS 3 OF 3
H40-42-14	OPEN RAIL DETAILS 1 OF 2
H40-43-14	OPEN RAIL DETAILS 2 OF 2
H40-43A-14	OPEN RAIL DETAILS 2A OF 2
H40-44-14	PIER BEARING DETAILS

INDEX FOR H40-14 STANDARDS (CONT'D.):

H40-45-14	PILE BENT PIERS FOR 0° SKEW
H40-46-14	PILE BENT PIERS FOR 0° SKEW
H40-47-14	PILE BENT PIERS HP14 PILES FOR 0° SKEW
H40-48-14	PILE BENT PIERS FOR 15° SKEW
H40-49-14	PILE BENT PIERS FOR 15° SKEW
H40-50-14	PILE BENT PIERS HP14 PILES FOR 15° SKEW
H40-51-14	PILE BENT PIERS FOR 30° SKEW
H40-52-14	PILE BENT PIERS FOR 30° SKEW
H40-53-14	PILE BENT PIERS HP14 PILES FOR 30° SKEW
H40-54-14	PILE BENT PIERS FOR 45° SKEW
H40-55-14	PILE BENT PIERS FOR 45° SKEW
H40-56-14	PILE BENT PIERS HP14 PILES FOR 45° SKEW
H40-57-14	TEE PIER CAP AND COLUMN, 0° SKEW
H40-58-14	TEE PIER CAP AND COLUMN, 0° SKEW
H40-59-14	TEE PIER-HP10x57 SRL-1 PILE FOOTINGS 0° SKEW, H=16' TO 24'
H40-60-14	TEE PIER-HP10x57 SRL-1 PILE FOOTINGS 0° SKEW, H=25' TO 40'
H40-61-14	TEE PIER-HP10x57 SRL-2 PILE FOOTINGS 0° SKEW, H=16' TO 24'
H40-62-14	TEE PIER-HP10x57 SRL-2 PILE FOOTINGS 0° SKEW, H=25' TO 40'
H40-63-14	TEE PIER-SPREAD FOOTINGS, 0° SKEW, H=16' TO 24'
H40-64-14	TEE PIER-SPREAD FOOTINGS, 0° SKEW, H=25' TO 40'
H40-65-14	TEE PIER CAP AND COLUMN, 15° SKEW
H40-66-14	TEE PIER CAP AND COLUMN, 15° SKEW
H40-67-14	TEE PIER-HP10x57 SRL-1 PILE FOOTINGS, 15° SKEW, H=16' TO 24'
H40-68-14	TEE PIER-HP10x57 SRL-1 PILE FOOTINGS, 15° SKEW, H=25' TO 40'
H40-69-14	TEE PIER-HP10x57 SRL-2 PILE FOOTINGS, 15° SKEW, H=16' TO 24'
H40-70-14	TEE PIER-HP10x57 SRL-2 PILE FOOTINGS, 15° SKEW, H=25' TO 40'
H40-71-14	TEE PIER-SPREAD FOOTINGS, 15° SKEW, H=16' TO 24'
H40-72-14	TEE PIER-SPREAD FOOTINGS, 15° SKEW, H=25' TO 40'
H40-73-14	TEE PIER CAP AND COLUMN, 30° SKEW
H40-74-14	TEE PIER CAP AND COLUMN, 30° SKEW
H40-75-14	TEE PIER-HP10x57 SRL-1 PILE FOOTINGS, 30° SKEW, H=16' TO 24'
H40-76-14	TEE PIER-HP10x57 SRL-1 PILE FOOTINGS, 30° SKEW, H=25' TO 40'
H40-77-14	TEE PIER-HP10x57 SRL-2 PILE FOOTINGS, 30° SKEW, H=16' TO 24'
H40-78-14	TEE PIER-HP10x57 SRL-2 PILE FOOTINGS, 30° SKEW, H=25' TO 40'
H40-79-14	TEE PIER-SPREAD FOOTINGS, 30° SKEW, H=16' TO 24'
H40-80-14	TEE PIER-SPREAD FOOTINGS, 30° SKEW, H=25' TO 40'
H40-81-14	TEE PIER CAP AND COLUMN, 45° SKEW
H40-82-14	TEE PIER CAP AND COLUMN, 45° SKEW
H40-83-14	TEE PIER-HP10x57 SRL-1 PILE FOOTINGS, 45° SKEW, H=16' TO 24'
H40-84-14	TEE PIER-HP10x57 SRL-1 PILE FOOTINGS, 45° SKEW, H=25' TO 40'
H40-85-14	TEE PIER-HP10x57 SRL-2 PILE FOOTINGS, 45° SKEW, H=16' TO 24'
H40-86-14	TEE PIER-HP10x57 SRL-2 PILE FOOTINGS, 45° SKEW, H=25' TO 40'
H40-87-14	TEE PIER-SPREAD FOOTINGS, 45° SKEW, H=16' TO 24'
H40-88-14	TEE PIER-SPREAD FOOTINGS, 45° SKEW, H=25' TO 40'
H40-89-14	SUBDRAIN DETAILS
H40-90-14	WING ARMORING DETAILS, A & B BEAMS
H40-91-14	WING ARMORING DETAILS, C BEAMS
H40-92-14	ABUTMENT BACKFILL DETAIL, A & B BEAMS - 0° SKEW
H40-93-14	ABUTMENT BACKFILL DETAIL, A & B BEAMS - SKEWED
H40-94-14	ABUTMENT BACKFILL DETAIL, C BEAMS - 0° SKEW
H40-95-14	ABUTMENT BACKFILL DETAIL, C BEAMS - SKEWED

STRUCTURAL RESISTANCE LEVEL-1 (SRL-1) REPLACES THE 50 TON STEEL PILE DESIGNATION.

STRUCTURAL RESISTANCE LEVEL-2 (SRL-2) REPLACES THE 75 TON STEEL PILE DESIGNATION.

FOR MORE INFORMATION ON STRUCTURAL RESISTANCE LEVELS (SRL-1 & SRL-2), SEE THE BRIDGE DESIGN MANUAL, LOCATED ON THE IOWA DEPARTMENT OF TRANSPORTATIONS, OFFICE OF BRIDGES AND STRUCTURES, WEBSITE.

LATEST REVISION DATE

APPROVED BY BRIDGE ENGINEER

IOWA DOT Highway Division

STANDARD DESIGN - 40' ROADWAY, THREE SPAN BRIDGE

PRETENSIONED PRESTRESSED CONCRETE BEAM BRIDGES

SEPTEMBER, 2014

INDEX SHEET

H40-01-14

GENERAL NOTES:

THE H40-14 BRIDGE STANDARDS, IF PROPERLY USED, PROVIDE THE STRUCTURAL PLANS NECESSARY TO CONSTRUCT THREE SPAN 40' ROADWAY PRETENSIONED PRESTRESSED CONCRETE BEAM BRIDGES WITH LENGTHS OF 138'-10, 151'-4, 163'-10, 176'-4, 188'-10, 201'-4, 213'-10, 226'-4 AND 243'-0.

THESE BRIDGES MAY BE BUILT ON A 0°, 15°, 30° OR 45° SKEW. THESE PLANS SHOW THE BRIDGES SKEWED IN ONE DIRECTION, BUT ALL DIMENSIONS AND DETAILS WOULD BE THE SAME FOR THE OPPOSITE SKEW.

FOR CLARITY, MOST SECTIONS SHOWN ON THE FOLLOWING SHEETS ARE DRAWN WITH BARRIER RAIL ONLY. THESE SECTIONS WILL BE IDENTICAL FOR OPEN RAIL DESIGN WITH ANY MODIFICATIONS SHOWN ON SHEET H40-42-14 AND H40-43-14.

THESE BRIDGES ARE DESIGNED FOR HL93 LOADING PLUS 20 LBS. PER SQ. FT. OF ROADWAY FOR FUTURE WEARING SURFACE. CONTROL OF CRACKING BY DISTRIBUTION OF REINFORCEMENT FOR SLAB DESIGN BASED ON PRE LRFD 2005 INTERIMS.

THE FLOOR SLAB AS SHOWN INCLUDES $\frac{1}{2}$" INTEGRAL WEARING SURFACE.

THE ABUTMENTS FOR THESE BRIDGES ARE BUILT INTEGRAL WITH THE SUPERSTRUCTURE. THEREFORE, IT IS IMPORTANT THAT A PROPER JOINT FOR EXPANSION BE PROVIDED BETWEEN THE BRIDGE AND APPROACH PAVING, WHEN APPROACH PAVING IS NEEDED.

THE INTEGRAL ABUTMENT DESIGN UTILIZED ON THESE BRIDGES RESTRICTS THEIR USE IN THE FOLLOWING MANNER:

(1) THE 201'-4, 213'-10, 226'-4 AND 243'-0 BRIDGES SHALL USE STEEL PILES AT THE ABUTMENTS.
(2) THESE BRIDGES ARE NOT TO BE USED WHEN POINT BEARING FOR THE ABUTMENT STEEL PILING WOULD BE OBTAINED ON ROCK AT A DISTANCE LESS THAN 15 FEET FROM THE BOTTOM OF FOOTING.
(3) THE ABUTMENT PILING ARE TO BE DRIVEN THROUGH OVERSIZED HOLES PREBORED TO A MINIMUM OF 10 FEET BELOW THE BOTTOM OF FOOTING. THE PREBORED HOLES SHALL BE IN ACCORDANCE WITH ARTICLE 2501.03, Q OF THE STANDARD SPECIFICATIONS. THE ELEVATION OF THE BOTTOM OF THE PREBORED HOLE SHALL BE SHOWN ON THE PLANS.

THESE STANDARDS GIVE MOST OF THE INFORMATION NECESSARY TO BUILD THESE BRIDGES ON EITHER A CREST VERTICAL CURVE OR A STRAIGHT GRADE. BECAUSE OF THE INFINITE NUMBER OF GRADE POSSIBILITIES IT WILL BE NECESSARY TO SHOW ON THE PLANS THE ABUTMENT AND PIER STEP DIMENSIONS. TO HELP IN OBTAINING THIS STEP INFORMATION SEE "EXAMPLES OF BRIDGE SEAT AND STEP CALCULATIONS" ON SHEET H40-02-14.

THE ABUTMENT FOOTING AND PIER CAP CONCRETE QUANTITIES SHOWN IN THESE PLANS ARE CALCULATED BASED ON A 0.3% GRADE. FOR HIGHER GRADES, THESE CONCRETE QUANTITIES FOR BRIDGES SKEWED AT 15°, 30°, AND 45° MAY NEED TO BE INCREASED. IN ADDITION, THE LAYOUT OF THE PIER CAP STEP REINFORCING STEEL IS GRADE DEPENDENT FOR BRIDGES SKEWED AT 15°, 30°, AND 45°. SEE SHEETS H40-17-14, H40-24-14, AND H40-31-14 TO DETERMINE THE ADDITIONAL CONCRETE QUANTITIES REQUIRED AND FOR THE LAYOUT AND QUANTITY OF THE PIER CAP STEP REINFORCING STEEL.

PROVIDE TOP OF SLAB ELEVATIONS AND WING ELEVATIONS A, B AND C AS NOTED ON THE STANDARD SHEETS (LONGITUDINAL SECTION).

VARIOUS TYPES OF PIERS MAY BE USED WITH THESE STANDARDS. IT SHOULD BE NOTED THAT THE DETAILS FOR THE PIER DIAPHRAGM ON THE SUPERSTRUCTURE DEPEND ON THE TYPE OF PIER USED.

THE INTEGRAL ABUTMENTS, PILE BENTS, AND TEE PIERS FOR THESE H40 STANDARDS HAVE BEEN DESIGNED FOR THE USE OF VARIOUS TYPES OF PILE FOOTINGS OR SPREAD FOOTINGS AS FOLLOWS.

- INTEGRAL ABUTMENTS: TIMBER PILES (LIMITED BY BRIDGE LENGTH) OR HP10x57 PILES AT BRIDGE DESIGN MANUAL (BDM) ARTICLE 6.2.6.1 STRUCTURAL RESISTANCE LEVEL-1 (SRL-1)
- PILE BENTS: STANDARD CONCRETE-FILLED STEEL PIPE PILES (P10L), STANDARD PRESTRESSED CONCRETE PILES (P10L), OR STANDARD H-PILES (P10L AND SRL-1)
- TEE PIERS: HP10x57 PILES AT BRIDGE DESIGN MANUAL (BDM) ARTICLE 6.2.6.1 STRUCTURAL RESISTANCE LEVEL-1 OR 2 (SRL-1 OR SRL-2) OR SPREAD FOOTINGS

STRUCTURAL RESISTANCE LEVEL-1 (SRL-1) REPLACES THE 50 TON STEEL PILE DESIGNATION.

STRUCTURAL RESISTANCE LEVEL 2 (SRL-2) REPLACES THE 75 TON STEEL PILE DESIGNATION.

FOR MORE INFORMATION ON SRL-1 AND SRL-2, SEE THE BRIDGE DESIGN MANUAL, LOCATED ON THE IOWA DEPARTMENT OF TRANSPORTATION, OFFICE OF BRIDGES AND STRUCTURES WEB SITE.

BECAUSE THESE BRIDGE STANDARDS HAVE BEEN REVISED FOR LRFD BASED ON 2012-COMPLETED IOWA STATE UNIVERSITY RESEARCH, FOR PILE FOUNDATIONS THE DESIGNER WILL NEED TO DETERMINE THE CONSTRUCTION CONTROL METHOD, CONTRACT LENGTH, AND DRIVING TARGET AND GIVE THAT INFORMATION ON THE FRONT SHEET OF THE PLANS. BRIDGE DESIGN MANUAL CADD NOTES E177, E718, E719, E818, AND E819 ARE APPROPRIATE FOR THAT PURPOSE. THE NOTES, AS WELL AS THE BRIDGE DESIGN MANUAL AND DESIGN EXAMPLES, ARE AVAILABLE ON THE OFFICE OF BRIDGES AND STRUCTURES WEB SITE: HTTP://WWW.IOWADOT.GOV/BRIDGE/INDEX.HTM.

THESE STANDARDS ARE USING NON-COATED, EPOXY COATED AND STAINLESS STEEL REINFORCING BARS. THE DESIGNER SHOULD NOTE WHERE THESE DIFFERENT TYPES OF BARS ARE USED THOUGHOUT THESE STANDARDS.

FOR PIERS SUBJECT TO SCOUR THE DESIGN BEARING SHALL BE OBTAINED BELOW SCOUR ELEVATION. SCOUR ELEVATION SHALL BE SHOWN ON THE FRONT SHEET.

CONCRETE INTERMEDIATE DIAPHRAGMS SHALL BE USED FOR OVERPASS BRIDGES. THE DESIGNER SHALL ADJUST THE CONCRETE AND REINFORCING QUANTITIES ACCORDINGLY.

3" WING PVC PIPE IS INCIDENTAL TO STRUCTURAL CONCRETE.

KEYWAY DIMENSIONS SHOWN ON THE PLANS ARE BASED ON NOMINAL DIMENSIONS UNLESS STATED OTHERWISE. IN ADDITION, THE BEVEL USED ON THE KEYWAY SHALL BE LIMITED TO A MAXIMUM OF 10 DEGREES FROM VERTICAL.

ALL REINFORCING BARS AND BARS NOTED AS DOWELS SUPPLIED FOR THIS STRUCTURE SHALL BE DEFORMED REINFORCEMENT UNLESS OTHERWISE NOTED OR SHOWN.

THESE BRIDGE PLANS LABEL ALL REINFORCING STEEL WITH ENGLISH NOTATION (5a1 IS $\frac{5}{8}$ INCH DIAMETER BAR). ENGLISH REINFORCING STEEL RECEIVED IN THE FIELD MAY DISPLAY THE FOLLOWING "BAR DESIGNATION". THE "BAR DESIGNATION" IS THE STAMPED IMPRESSION ON THE REINFORCING BARS, AND IS EQUIVALENT TO THE BAR DIAMETER IN MILLIMETERS.

ENGLISH SIZE	3	4	5	6	7	8	9	10	11
BAR DESIGNATION	10	13	16	19	22	25	29	32	36

DESIGN STRESSES:

DESIGN STRESSES FOR THE FOLLOWING MATERIALS ARE IN ACCORDANCE WITH THE AASHTO LRFD BRIDGE DESIGN SPECIFICATIONS, 4th Ed, SERIES OF 2007.
REINFORCING STEEL IN ACCORDANCE WITH LRFD AASHTO SECTION 5, GRADE 60.
CONCRETE IN ACCORDANCE WITH LRFD AASHTO SECTION 5, f'c = 3,500 PSI.
FOR STANDARD PRESTRESSED CONCRETE BEAMS, SEE SHEETS H40-32-14 THRU H40-37-14

SPECIFICATIONS:

DESIGN:
AASHTO LRFD 4th Ed, SERIES OF 2007.

CONSTRUCTION:
IOWA DEPARTMENT OF TRANSPORTATION STANDARD SPECIFICATIONS FOR HIGHWAY AND BRIDGE CONSTRUCTION, SERIES 2012, PLUS APPLICABLE GENERAL SUPPLEMENTAL SPECIFICATIONS, DEVELOPMENTAL SPECIFICATIONS, SUPPLEMENTAL SPECIFICATIONS AND SPECIAL PROVISIONS SHALL APPLY TO CONSTRUCTION WORK ON THIS PROJECT.

THESE STANDARDS GIVE MOST OF THE INFORMATION NECESSARY TO BUILD THESE BRIDGES. HOWEVER, THE FOLLOWING ADDITIONAL INFORMATION IS REQUIRED FOR USE ON PRIMARY ROUTES. FOR SECONDARY ROUTES THE ENGINEER MAY NOT REQUIRE ALL SHEETS TO BE PROVIDED:

1. TITLE SHEET WITH ENGINEERS SEAL
2. ESTIMATED QUANTITIES TOTALS INCLUDING CLASS 20 EXCAVATION FOR BRIDGE
3. SUMMARY QUANTITIES SHEET
4. SITUATION PLAN LAYOUT OF BRIDGE
5. TOP OF SLAB ELEVATIONS LAYOUT
6. BOTTOM OF ABUTMENT FOOTING ELEVATIONS
7. BOTTOM OF PIER CAP ELEVATIONS
8. PILING DESIGN INFORMATION
9. SLOPE PROTECTION LAYOUT IF NEEDED
10. CONDUIT LAYOUT
11. LIGHTING LAYOUT IF NEEDED

LATEST REVISION DATE

APPROVED BY BRIDGE ENGINEER

IOWADOT Highway Division

STANDARD DESIGN - 40' ROADWAY, THREE SPAN BRIDGE

PRETENSIONED PRESTRESSED CONCRETE BEAM BRIDGES

SEPTEMBER, 2014

GENERAL NOTES

H40-01A-14

EXAMPLES OF BRIDGE SEAT AND STEP CALCULATIONS:

THE DESIGNER SHALL SHOW ON THE PLANS THE 6 ELEVATIONS AND THE 5 STEP DIMENSIONS REQUIRED FOR EACH OF THE PIER TOP AND ABUTMENT BRIDGE SEATS.

THE BOXED IN DETAILS IN THE FOLLOWING EXAMPLES SHOW HOW THE INFORMATION SHOULD BE INDICATED ON THE PLANS.

EXAMPLE NO. 1

A STRAIGHT GRADE OF -3.25% WITH THE P.I. STATION OF 103+75.00 AND ELEVATION OF 653.29. THE BRIDGE LENGTH IS 213'-10 ℄ TO ℄ OF ABUTMENT BEARINGS WITH 30° SKEW RIGHT AHEAD.

STATIONS

℄ BRIDGE STA.	=	105+85.00	
± $\frac{1}{2}$ OF L2	±	38.67	
℄ PIER BRGS.	=	105+46.33	106+23.67
± L1		- 68.25	+ 68.25
℄ ABUTMENT BRGS.		104+78.08	106+91.92

ELEVATIONS ALONG PROFILE GRADE LINE (P.G.L. ELEV.)

℄ ABUT. BRG. = 653.29-[(104+78.08)-(103+75.00)](0.0325) = 649.94
℄ PIER BRG. = 653.29-[(105+46.33)-(103+75.00)](0.0325) = 647.72
℄ PIER BRG. = 653.29-[(106+23.67)-(103+75.00)](0.0325) = 645.21
℄ ABUT. BRG. = 653.29-[(106+91.92)-(103+75.00)](0.0325) = 642.99

ELEVATIONS TOP OF SLAB FACING ALONG THE STATIONING
(BEAM SPACING)(TAN. SK.△)(GRADE) = (7.401)TAN 30°(0.0325) = 0.14'

ABUTMENT NO. 1

BEAMS	EXTERIOR	INTERIOR	INTERIOR	INTERIOR	INTERIOR	EXTERIOR
PGL ELEV.	649.94	649.94	649.94	649.94	649.94	649.94
SK. △CORRECT	+.35	+.21	+.07	-0.07	-0.21	-0.35
SLAB CROWN	-0.34	-0.19	-0.04	-0.04	-0.19	-0.34
TOP SLAB ELEV.	649.95	649.96	649.97	649.83	649.54	649.25
-"U" (4'-8$\frac{7}{8}$)	-4.74	-4.74	-4.74	-4.74	-4.74	-4.74
BR. SEAT ELEV.	645.21	645.22	645.23	645.09	644.80	644.51

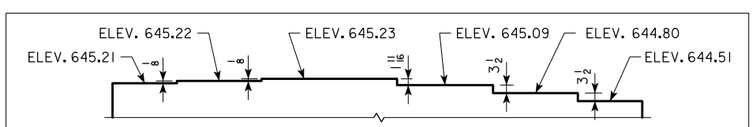

ABUTMENT NO. 1 STEP DIAGRAM
LOOKING UP STATIONING

EXAMPLE NO. 2

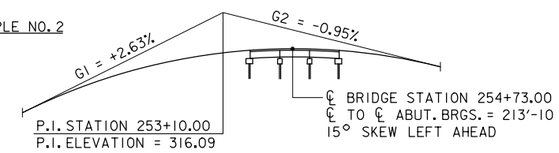

FROM SHEET H40-04-14 { LENGTH OF VERTICAL CURVE = (20000)(0.0358) = 716 FEET
M.O. = (0.0358)(716)($\frac{1}{8}$) = 3.204 FEET

STATIONS

℄ BRIDGE STA.	=	254+73.00	
± $\frac{1}{2}$ OF L2	±	38.67	
℄ PIER BRGS.	=	254+34.33	255+11.67
± L1		- 68.25	+ 68.25
℄ ABUTMENT BRGS.	=	253+66.08	255+79.92

ELEVATIONS TOP OF SLAB FACING ALONG THE STATIONING
(BEAM SPACING)(TAN. SK.△) = (7.401')TAN 15° = 1.98'

PIER NO. 1

BEAMS	EXTERIOR	INTERIOR	INTERIOR	INTERIOR	INTERIOR	EXTERIOR
STATION	254+39.28	254+37.30	254+35.32	254+33.34	254+31.36	254+29.38
PGL ELEV.	+313.55	+313.55	+313.55	313.54	313.54	313.53
SLAB CROWN	-0.34	-0.19	-0.04	-0.04	-0.19	-0.34
TOP SLAB ELEV.	313.21	313.36	313.51	313.50	313.35	313.19
-"U" (4'-7$\frac{5}{16}$)	-4.61	-4.61	-4.61	-4.61	-4.61	-4.61
BR. SEAT ELEV.	308.60	308.75	308.90	308.89	308.74	308.58

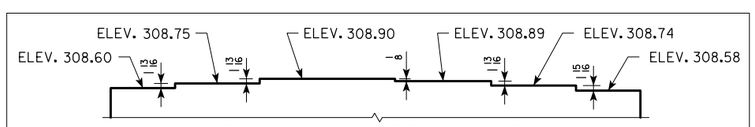

PIER NO. 1 STEP DIAGRAM
LOOKING UP STATIONING

TEE PIER NOTES:

THE TEE PIERS SHOWN IN THESE PLANS ARE DESIGNED FOR USE WITH THE H40-14 PRETENSIONED PRESTRESSED CONCRETE BEAM BRIDGE STANDARDS. THE PIER MAY BE USED FOR EITHER GRADE SEPARATION OR STREAM CROSSING STRUCTURES. THE PIERS WERE DESIGNED FOR THE FOLLOWING STREAM FORCE AND ICE LOADING CONDITIONS, AND SHOULD NOT BE USED WHERE THESE LOADING CONDITIONS ARE EXCEEDED.

ICE FORCE:
ICE FORCES WERE APPLIED AT A HEIGHT OF H/2 + 1'-6 ABOVE THE BOTTOM OF THE PIER FOOTING, WHERE H IS THE OVERALL HEIGHT OF PIER. THE EFFECTIVE ICE STRENGTH WAS 24 KSF FOR 1'-7 OF ICE DEPTH. A PRIMARY ICE FORCE (F) WAS CALCULATED ACCORDING TO THE LRFD SPECIFICATIONS AND APPLIED TO THE PIER STEM AS FOLLOWS:

CASE 1: 100% OF F APPLIED PARALLEL TO THE PIER'S LONG AXIS AND 15% OF F APPLIED PERPENDICULAR TO THE PIER'S LONG AXIS.
CASE 2: 50% OF F APPLIED PARALLEL TO THE PIER'S LONG AXIS AND 34% OF F APPLIED PERPENDICULAR TO THE PIER'S LONG AXIS.

STREAM FLOW:
THE STREAM VELOCITY USED WAS 5 FT/SEC WITH THE C_D COEFFICIENT EQUAL TO 1.4. THE RESULTING STREAM FORCE WAS ASSUMED TO ACT PARALLEL TO THE PIER'S LONG AXIS. IT WAS ASSUMED THAT SUPERSTRUCTURE ELEMENTS WILL CLEAR HIGH WATER BY APPROXIMATELY 3'-0.

FOOTING GEOMETRY:
IT WAS ASSUMED THAT THE PIER FOOTING WILL BE SET APPROXIMATELY 6'-0 BELOW THE ADJACENT STREAMBED OR GROUND SURFACE. IT WAS ALSO ASSUMED THAT THERE ARE NO SIGNIFICANT UNBALANCED EARTH PRESSURES APPLIED TO THE PIER.

ALL BRIDGES WITH TEE PIERS DETAILED ON THESE STANDARDS ARE INTENDED TO HAVE ONE FIXED PIER AND ONE EXPANSION PIER. THE PILE LAYOUT AND REINFORCEMENT SHOWN ARE THE SAME FOR EITHER FIXED OR EXPANSION PIER. THE ONLY DISTINCTION BETWEEN FIXED PIER AND EXPANSION PIER LIES IN THE SELECTION OF BEARINGS AND PRESENCE OF THE KEYWAY IN THE TOP OF THE CAP. EACH BRIDGE SHALL HAVE ONE SET OF FIXED BEARINGS AND ONE SET OF EXPANSION BEARINGS, WHICH MAY BE USED ON EITHER PIER 1 OR PIER 2. THE KEYWAY IN THE TOP OF THE CAP SHOULD BE ELIMINATED FROM THE EXPANSION PIER.

HP10x57 STEEL PILE SHALL BE USED IN THE PILE FOOTINGS OF THE PIERS FOR EITHER FRICTION OR POINT BEARING PILE CONDITIONS. FRICTION BEARING INCLUDES SIDE FRICTION AND END BEARING IN SOIL. POINT BEARING INCLUDES SIDE FRICTION AND POINT BEARING IN ROCK. NOMINAL STRUCTURAL RESISTANCE WAS TAKEN AS 243 KIPS FOR HP10x57 SRL-1 FRICTION BEARING PILES AND 365 KIPS FOR HP10x57 SRL-2 POINT BEARING PILES. A NOMINAL UPLIFT RESISTANCE OF 42 KIPS PER PILE WAS USED IN THE DESIGN OF THE PIER FOOTINGS. THE PIER SHALL NOT BE USED AT SITES WHERE THIS UPLIFT FORCE CANNOT BE ACHIEVED DUE TO SPECIFIC CONDITIONS SUCH AS NEAR SURFACE ROCK LAYERS.

WHEN PIERS ARE USED IN GRADE SEPARATION STRUCTURES, EPOXY COATED REINFORCEMENT MAY BE REQUIRED FOR PIER COLUMNS. CONSULT CURRENT POLICY FOR GUIDANCE ON THE USE OF EPOXY COATED REINFORCEMENT IN SUCH CASES. ADJUST THE dl COLUMN BAR PROJECTION INTO THE CAP AND dl/d2 LAP DISTANCE ACCORDINGLY.

LATEST REVISION DATE

APPROVED BY BRIDGE ENGINEER

IOWA DOT Highway Division

STANDARD DESIGN - 40' ROADWAY, THREE SPAN BRIDGE

PRETENSIONED PRESTRESSED CONCRETE BEAM BRIDGES

SEPTEMBER, 2014

GENERAL INFORMATION | H40-02-14

GENERAL NOTES:

CLEAR DISTANCE FROM FACE OF CONCRETE TO NEAR REINFORCING BAR SHALL BE 2" UNLESS OTHERWISE NOTED OR SHOWN.

ALL REINFORCING BARS ARE TO BE SECURELY WIRED IN PLACE AND ADEQUATELY SUPPORTED ON BAR CHAIRS BEFORE CONCRETE IS PLACED. I.M. 451.01 REQUIREMENTS SHALL APPLY FOR BAR CHAIRS.

ALL PRESTRESSED CONCRETE BEAMS ARE TO BE SET VERTICAL.

FORMS FOR THE SLAB AND RAILS ARE TO BE SUPPORTED BY THE PRESTRESSED CONCRETE BEAMS.

WEIGHT OF DRAINS IS INCLUDED IN THE STRUCTURAL STEEL QUANTITY.

THE PIER AND ABUTMENT DIAPHRAGM CONCRETE IS TO BE PLACED MONOLITHICALLY WITH THE FLOOR SLAB.

ALL REINFORCING STEEL IS TO BE GRADE 60.

COST OF ALL PREFORMED EXPANSION JOINT FILLER MATERIAL IS TO BE INCLUDED IN THE PRICE BID FOR "STRUCTURAL CONCRETE (BRIDGE)".

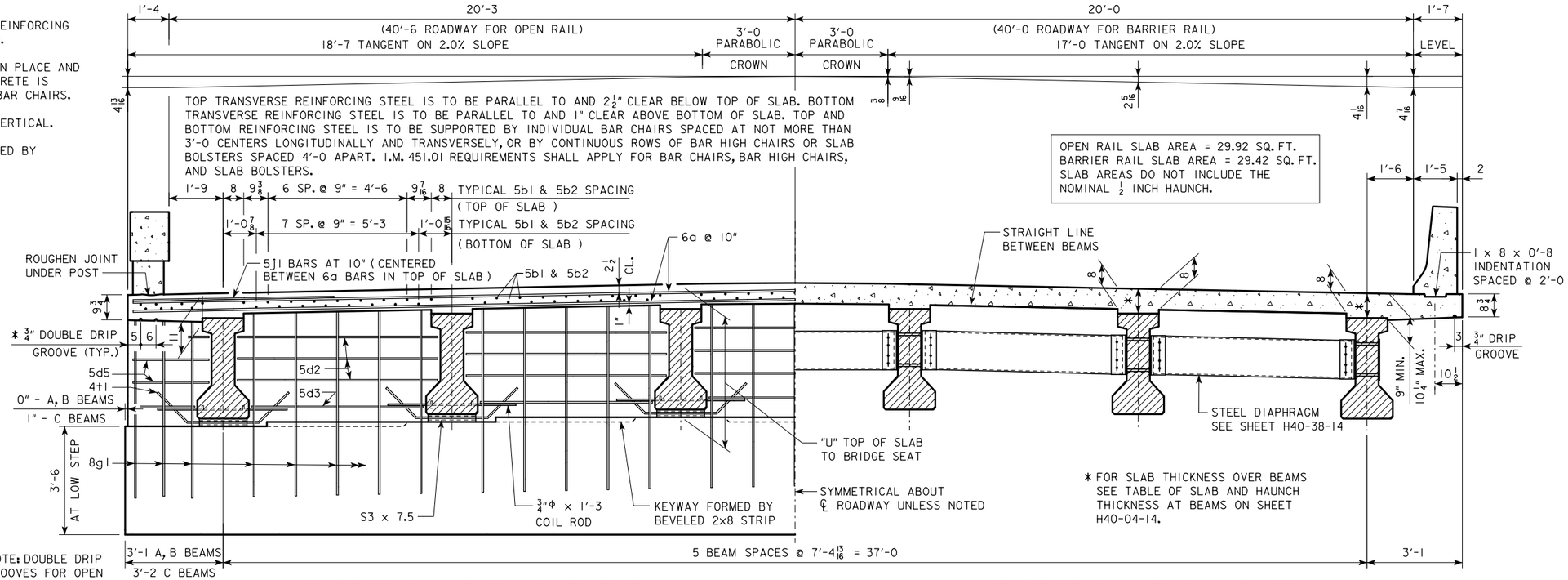

HALF SECTION NEAR ABUTMENT
(OPEN RAIL SHOWN)

HALF SECTION NEAR MID SPAN
(BARRIER RAIL SHOWN)

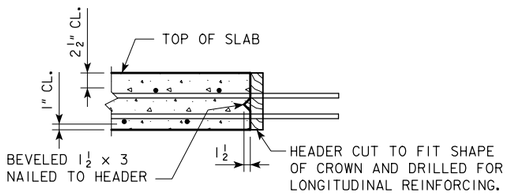

TRANSVERSE SLAB CONSTRUCTION JOINT

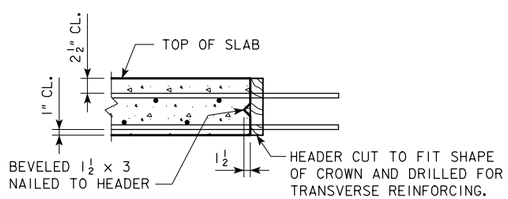

LONGITUDINAL SLAB CONSTRUCTION JOINT

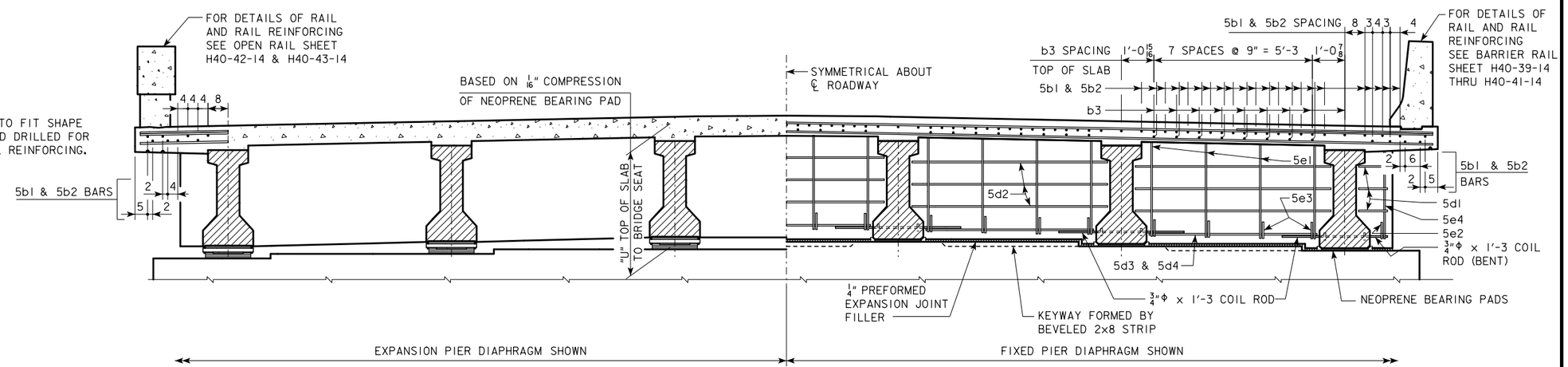

SECTION NEAR PIER

LENGTH OF S3 x 7.5
(ABUTMENT BEAM SEAT)

BEAM BOTTOM FLANGE WIDTH	LENGTH OF S3 x 7.5
1'-5	1'-3½
1'-8	1'-6½

LATEST REVISION DATE

APPROVED BY BRIDGE ENGINEER

IOWA DOT Highway Division

STANDARD DESIGN - 40' ROADWAY, THREE SPAN BRIDGE

PRETENSIONED PRESTRESSED CONCRETE BEAM BRIDGES

SEPTEMBER, 2014

SUPERSTRUCTURE DETAILS

H40-03-14

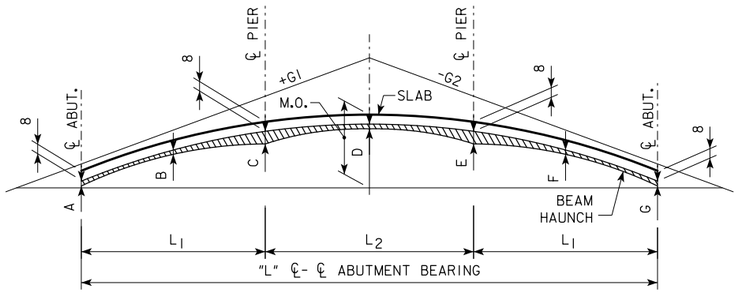

℄-℄ ABUT. BRG. "L"	A ℄ ABUT.	B	C ℄ PIER	D	E ℄ PIER	F	G ℄ ABUT.
138'-10	1	9/16	1 7/16	9/16	1 7/16	9/16	1
151'-4	13/16	5/8	1 5/8	9/16	1 5/8	5/8	13/16
163'-10	7/8	9/16	1 3/8	1/2	1 3/8	9/16	7/8
176'-4	13/16	9/16	1 9/16	1/2	1 9/16	9/16	13/16
188'-10	7/8	5/8	1 15/16	1/2	1 15/16	5/8	7/8
201'-4	9/16	11/16	1 3/8	9/16	1 3/8	11/16	9/16
213'-10	11/16	5/8	1 5/16	9/16	1 5/16	5/8	11/16
226'-4	1 1/8	5/8	1 9/16	9/16	1 9/16	5/8	1 1/8
243'-0	1 7/16	9/16	1 9/16	9/16	1 9/16	9/16	1 7/16

LENGTH OF VERTICAL CURVE REQUIRED = (20,000)(GI-G2)

$$M.O. = \frac{(GI-G2)(\text{LENGTH OF V.C.})}{8}$$

(GI-G2) IS THE ALGEBRAIC DIFFERENCE OF THE APPROACH GRADES EXPRESSED IN DECIMAL FORM. GI NEED NOT HAVE THE SAME VALUE AS G2. MAXIMUM VALUE OF GI OR G2 IS 5%. LENGTH OF CURVE AND M.O. ARE IN FEET.

SLAB AND HAUNCH THICKNESS AT BEAMS FOR VERTICAL CURVE

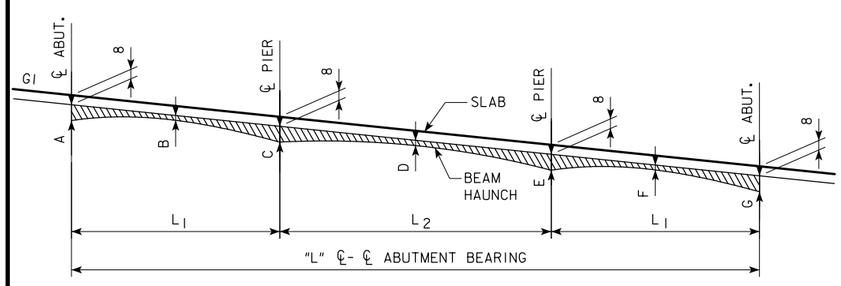

℄-℄ ABUT. BRG. "L"	A ℄ ABUT.	B	C ℄ PIER	D	E ℄ PIER	F	G ℄ ABUT.
138'-10	1 1/16	1/2	1 5/8	9/16	1 5/8	1/2	1 1/16
151'-4	7/8	9/16	1 13/16	1/2	1 13/16	9/16	7/8
163'-10	15/16	1/2	1 5/8	1/2	1 5/8	1/2	15/16
176'-4	15/16	1/2	1 7/8	1/2	1 7/8	1/2	15/16
188'-10	1	9/16	2 5/16	9/16	2 5/16	9/16	1
201'-4	3/4	5/8	1 3/4	9/16	1 3/4	5/8	3/4
213'-10	7/8	1/2	1 3/4	1/2	1 3/4	1/2	7/8
226'-4	1 5/16	1/2	2 1/16	9/16	2 1/16	1/2	1 5/16
243'-0	1 7/8	1/2	2 1/16	9/16	2 1/16	1/2	1 7/8

GI MAY HAVE A + OR - SIGN. THE MINIMUM NUMERICAL VALUE OF THE GRADE IS 0.3% AND THE MAXIMUM VALUE IS 5%.

SLAB AND HAUNCH THICKNESS AT BEAMS FOR STRAIGHT GRADE

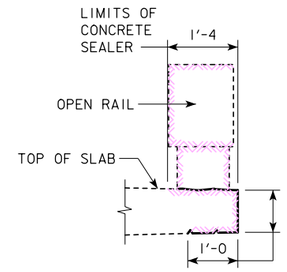

CONCRETE SEALER LIMITS FOR OPEN RAILS

CONCRETE SEALER SHALL BE APPLIED TO BOTH SIDES OF BRIDGE SLAB ON THE TOP, EDGE OF SLAB AND UNDER THE SLAB. THE CONCRETE SEALER SHALL ALSO BE APPLIED TO THE OPEN RAIL ON THE TOP, TRAFFIC FACE SIDE, BOTTOM OF RAIL, AND ON ALL SIDES OF THE OPEN RAIL POSTS.

THE CONCRETE SEALER LIMITS ARE SHOWN IN THE DETAIL AND SHALL APPLY TO THE FULL LENGTH OF BRIDGE. CONCRETE SEALER SHALL BE APPLIED IN ACCORDANCE WITH ARTICLE 2403.03, P, 3, OF THE STANDARD SPECIFICATIONS.

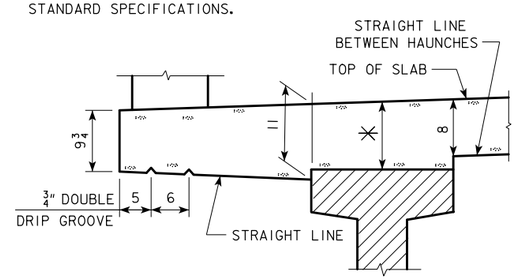

EXTERIOR BEAMS @ OPEN RAIL

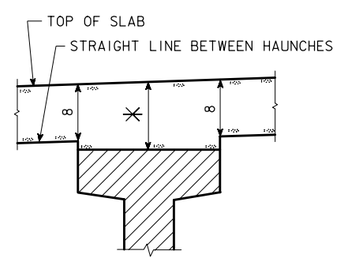

INTERIOR BEAMS

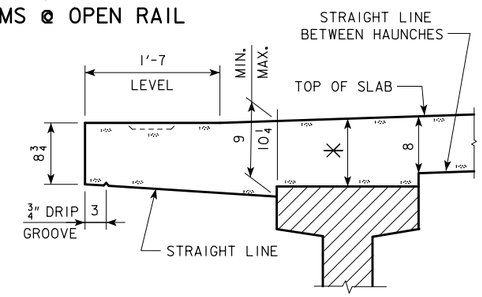

EXTERIOR BEAMS @ BARRIER RAIL

TYPICAL SLAB AND HAUNCH DETAIL

* FOR SLAB THICKNESS OVER BEAMS SEE " SLAB THICKNESS DETAILS " ON THIS SHEET.

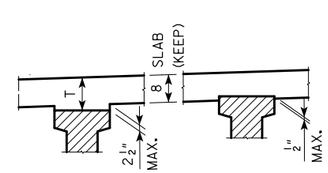

SLAB THICKNESS DETAILS

NOTE: THE SLAB THICKNESS (T) AT THE BEAMS, (8" SLAB PLUS HAUNCH) IS BASED ON THE ANTICIPATED BEAM CAMBER REMAINING AFTER PLACING THE SLAB, BUT IS NOT GUARANTEED FOR CONSTRUCTION. IF BEAM IS UNDER CAMBERED INCREASE THE HAUNCH THICKNESS OVER THE BEAM AT THE MIDPOINT OF THE SPANS (POINTS B, D AND F). IF THE BEAM IS OVER CAMBERED DECREASE THE HAUNCH THICKNESS OVER THE BEAM AT THE MIDPOINT OF THE SPANS (POINTS B, D AND F) TO A MAXIMUM OF 1/2" EMBEDMENT IN THE SLAB. IF MORE THAN 1/2" EMBEDMENT IS REQUIRED OR IF THE HAUNCH EXCEEDS 2 1/2" THE GRADE LINE IS TO BE REVISED.

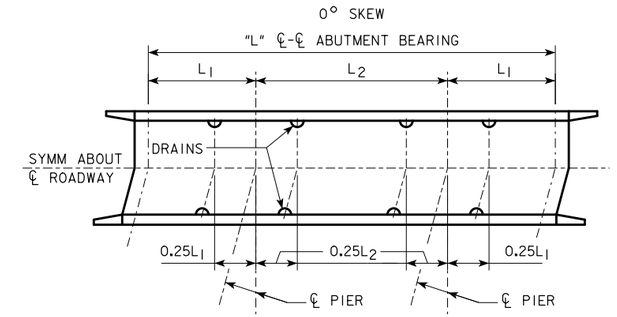

SITUATION SKETCH

(SHOWING DRAIN LOCATIONS)

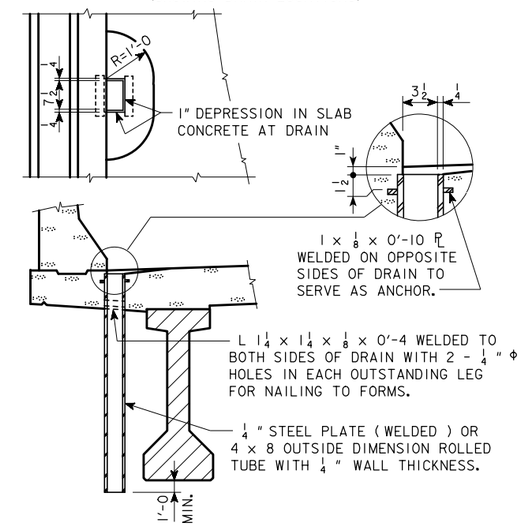

DRAIN DETAILS

USE FOR BARRIER RAIL ONLY.
NOT REQUIRED FOR OPEN RAIL.

NOTE :
DRAINS ARE TO BE GALVANIZED AFTER FABRICATION.
SEE " SITUATION SKETCH " FOR LOCATION OF DRAINS.
WEIGHT OF DRAINS IS INCLUDED IN THE QUANTITY FOR "STRUCTURAL STEEL" ON THE SUMMARY QUANTITIES SHEET IN THE PLAN. WEIGHT IS BASED ON ROLLED TUBE.

DATA FOR ONE DRAIN			
BEAM SIZE	A	B	C
WT. LBS.	85	96	106
LENGTH FT.	4'-4 3/4	4'-11 3/4	5'-5 3/4

LATEST REVISION DATE

APPROVED BY BRIDGE ENGINEER

IOWA DOT Highway Division

STANDARD DESIGN - 40' ROADWAY, THREE SPAN BRIDGE

PRETENSIONED PRESTRESSED CONCRETE BEAM BRIDGES

SEPTEMBER, 2014

SUPERSTRUCTURE DETAILS | H40-04-14

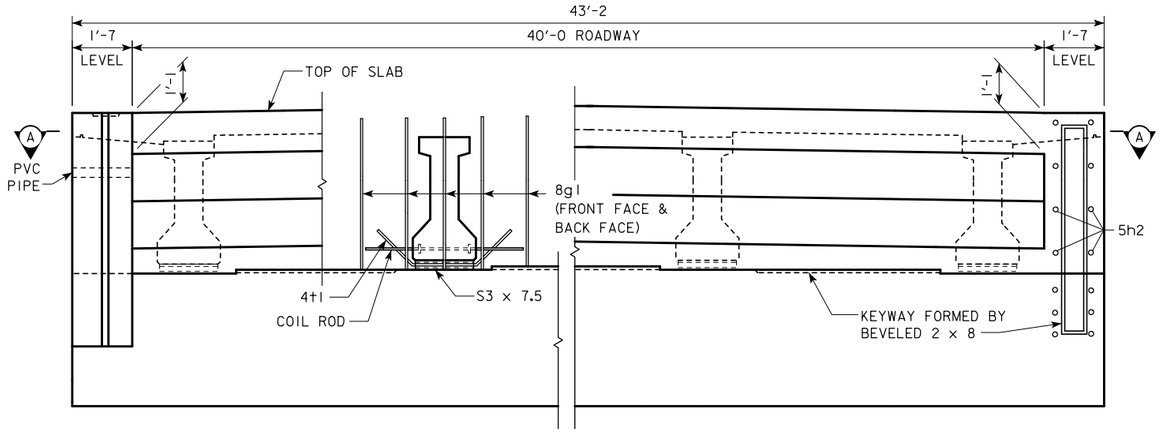

PART REAR ELEVATION AT ABUTMENT

NOTE: TOP OF ABUTMENT SHOWN FOR SOLID BARRIER RAIL

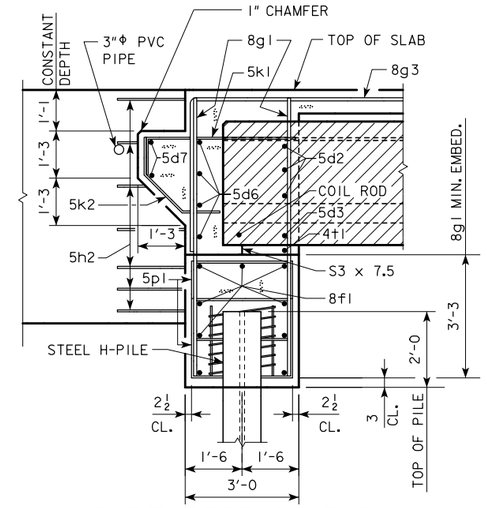

PART SECTION B-B

(FOR STEEL H-PILING)

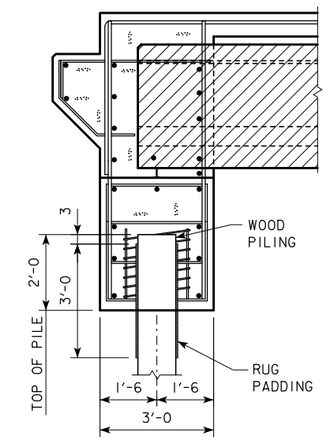

PART SECTION B-B

(FOR WOOD PILING)

WOOD PILING NOTE:

AFTER PILES ARE CUT OFF, THE UPPER 3', EXCEPT AS SHOWN, IS TO BE WRAPPED WITH A DOUBLE THICKNESS OF RUG PADDING HELD IN PLACE BY TACKING WITH GALVANIZED ROOFING NAILS AND WRAPPED WITH #14 GAUGE GALVANIZED WIRE AT A 4" PITCH, CARE IS TO BE TAKEN NOT TO DAMAGE PADDING WHEN PLACING CONCRETE. RUG PADDING MAY BE EITHER OF THE FOLLOWING:
(1) HAIR AND JUTE RUG PADDING, RUBBERIZED ON BOTH SIDES, AND WEIGHING NOT LESS THAN 47 OZ. PER SQ. YD.
(2) BONDED URETHANE OR BONDED POLYFOAM WITH A MINIMUM DENSITY OF 5 LBS. PER CU. FT. AND SHALL BE AT LEAST ½ IN. THICK, (MATERIAL LESS THAN ½ IN. IN THICKNESS MAY BE USED, BUT WILL REQUIRE ADDITIONAL WRAPS FOR A TOTAL OF AT LEAST ONE INCH).

NOTE:
THE SPIRAL AT THE TOP OF EACH PILE TO BE 7 TURNS OF NO. 2 BAR, 21" DIAMETER, 3" PITCH WITH 3 - L $\frac{7}{8} \times \frac{7}{8} \times \frac{1}{8}$ SPACERS PUNCHED TO HOLD SPIRAL.

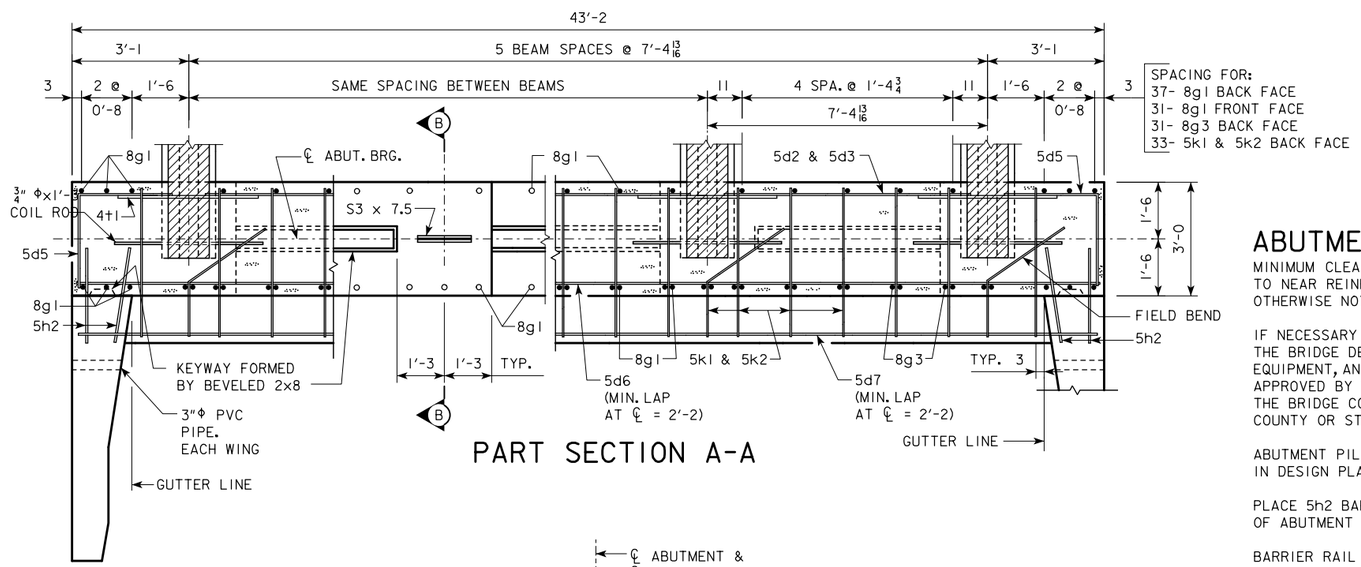

SPACING FOR:
37- 8g1 BACK FACE
31- 8g1 FRONT FACE
31- 8g3 BACK FACE
33- 5k1 & 5k2 BACK FACE

PART SECTION A-A

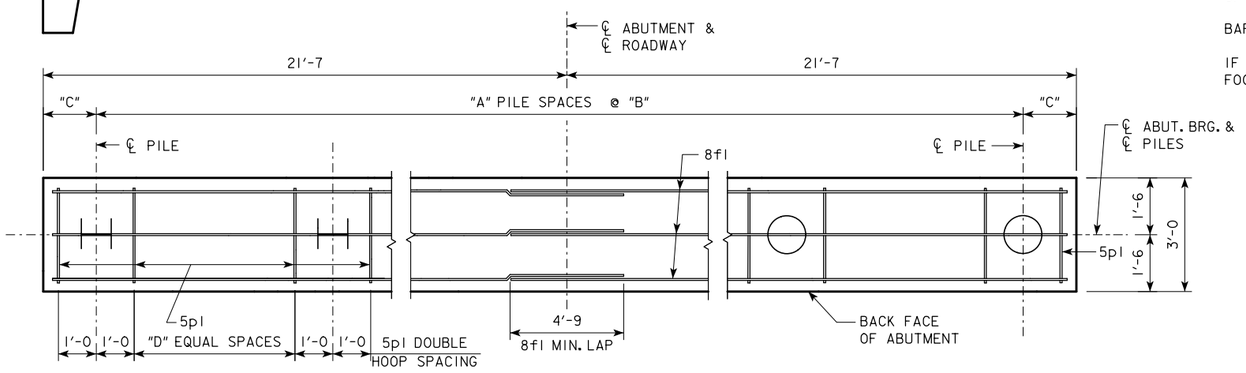

ABUTMENT PILE PLAN

ABUTMENT NOTES:

MINIMUM CLEAR DISTANCE FROM FACE OF CONCRETE TO NEAR REINFORCING BAR IS TO BE 2" UNLESS OTHERWISE NOTED OR SHOWN.

IF NECESSARY TO PREVENT DAMAGE TO THE END OF THE BRIDGE DECK OR BACKWALL FROM CONSTRUCTION EQUIPMENT, AN APPROPRIATE METHOD OF PROTECTION APPROVED BY THE ENGINEER SHALL BE PROVIDED BY THE BRIDGE CONTRACTOR AT NO EXTRA COST TO THE COUNTY OR STATE.

ABUTMENT PILES SHALL BE DRIVEN TO VALUES SHOWN IN DESIGN PLANS.

PLACE 5h2 BAR AT 1:6 SLOPE TO MATCH TRAFFIC SIDE OF ABUTMENT WING FACE. (BOTH SIDES TYPICAL)

BARRIER RAIL NOT SHOWN IN DETAILS.

IF ROCK IS CLOSER THAN 15' BELOW ABUTMENT FOOTING, SPECIAL ANALYSIS MAY BE REQUIRED.

ABUTMENT PILE SPACING	℄-℄ ABUT. BRG.	138'-10	151'-4	163'-10	176'-4	188'-10
WITH WOOD PILES	"A" PILE SPACES	13	14	15	15	16
	"B" (FT. - IN.)	2'-11	2'-9	2'-6	2'-6	2'-6
	"C" (FT. - IN.)	2'-7½	2'-4	2'-10	2'-10	1'-7
	"D" EQUAL SPACES	1	1	1	1	1
	NO. OF PILES PER ABUT.	14	15	16	16	17
	PU, STRENGTH I DESIGN LOAD (KIPS)	56	55	55	57	56
WITH STEEL H-PILES	"A" PILE SPACES	5	6	6	6	7
	"B" (FT. - IN.)	7'-8	6'-5	6'-5	6'-5	5'-6
	"C" (FT. - IN.)	2'-5	2'-4	2'-4	2'-4	2'-4
	"D" EQUAL SPACES	5	4	4	4	3
	NO. OF PILES PER ABUT.	6	7	7	7	8
	PU, STRENGTH I DESIGN LOAD (KIPS)	144	128	137	142	128

NOTE: PU, STRENGTH I DESIGN LOAD (KIPS) IS NOT THE VALUE USED IN THE FIELD FOR DRIVING PILES.
NOTE: THE PILE TYPE AND NUMBER OF PILES ARE TO BE INCLUDED ON THE SUMMARY QUANTITIES SHEET IN THE PLAN.

LATEST REVISION DATE

APPROVED BY BRIDGE ENGINEER

IOWA DOT Highway Division

STANDARD DESIGN - 40' ROADWAY, THREE SPAN BRIDGE

PRETENSIONED PRESTRESSED CONCRETE BEAM BRIDGES

SEPTEMBER, 2014

ABUTMENT DETAILS

0° SKEW A & B BEAMS

H40-05-14

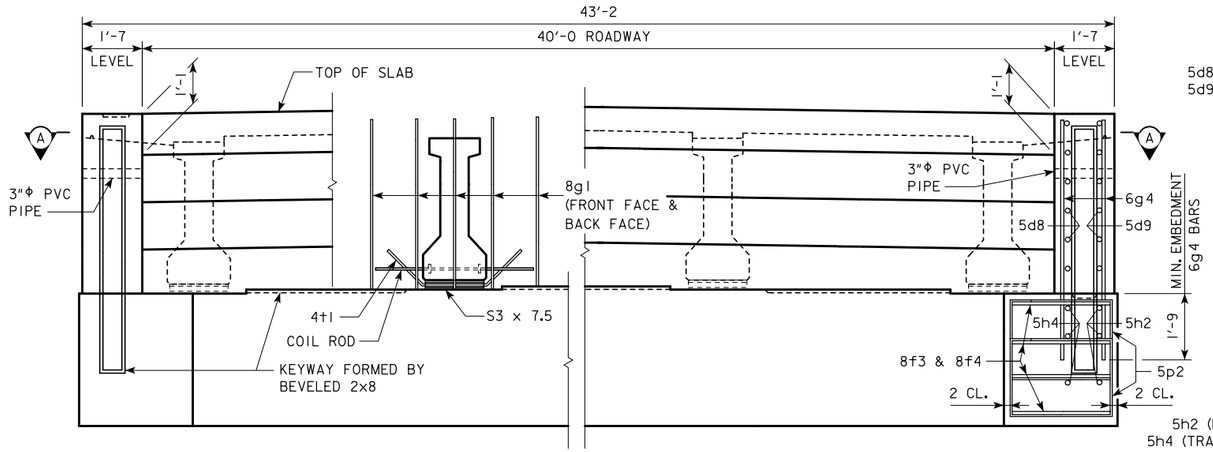

PART REAR ELEVATION AT ABUTMENT

NOTE: TOP OF ABUTMENT SHOWN FOR SOLID BARRIER RAIL

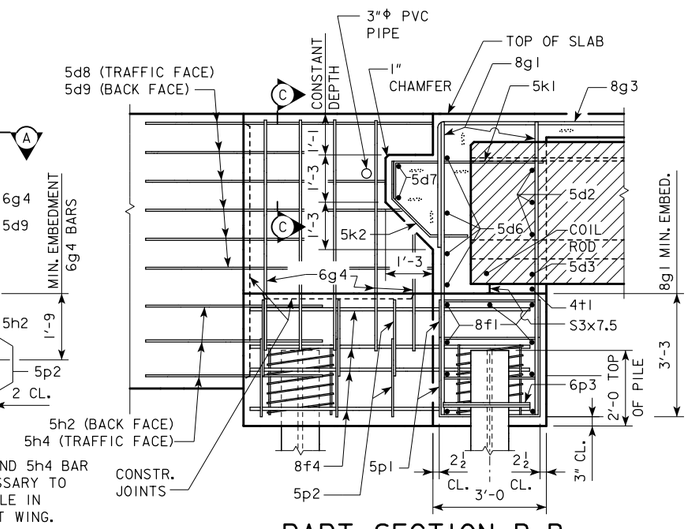

FIELD BEND 5h4 BAR AS NECESSARY TO AVOID PILE IN ABUTMENT WING.

PART SECTION B-B

ABUTMENT NOTES:

MINIMUM CLEAR DISTANCE FROM FACE OF CONCRETE TO NEAR REINFORCING BAR IS TO BE 2" UNLESS OTHERWISE NOTED OR SHOWN.

IF NECESSARY TO PREVENT DAMAGE TO THE END OF THE BRIDGE DECK OR BACKWALL FROM CONSTRUCTION EQUIPMENT, AN APPROPRIATE METHOD OF PROTECTION APPROVED BY THE ENGINEER SHALL BE PROVIDED BY THE BRIDGE CONTRACTOR AT NO EXTRA COST TO THE COUNTY OR STATE.

ABUTMENT PILES SHALL BE DRIVEN TO VALUES SHOWN IN DESIGN PLANS.

BARRIER RAIL NOT SHOWN IN DETAILS.

IF ROCK IS CLOSER THAN 15' BELOW ABUTMENT FOOTING, SPECIAL ANALYSIS MAY BE REQUIRED.

NOTE:
THE SPIRAL AT THE TOP OF EACH PILE TO BE 7 TURNS OF NO. 2 BAR, 21" DIAMETER, 3" PITCH WITH 3 - $L\frac{7}{8} \times \frac{7}{8} \times \frac{1}{8}$ SPACERS PUNCHED TO HOLD SPIRAL.

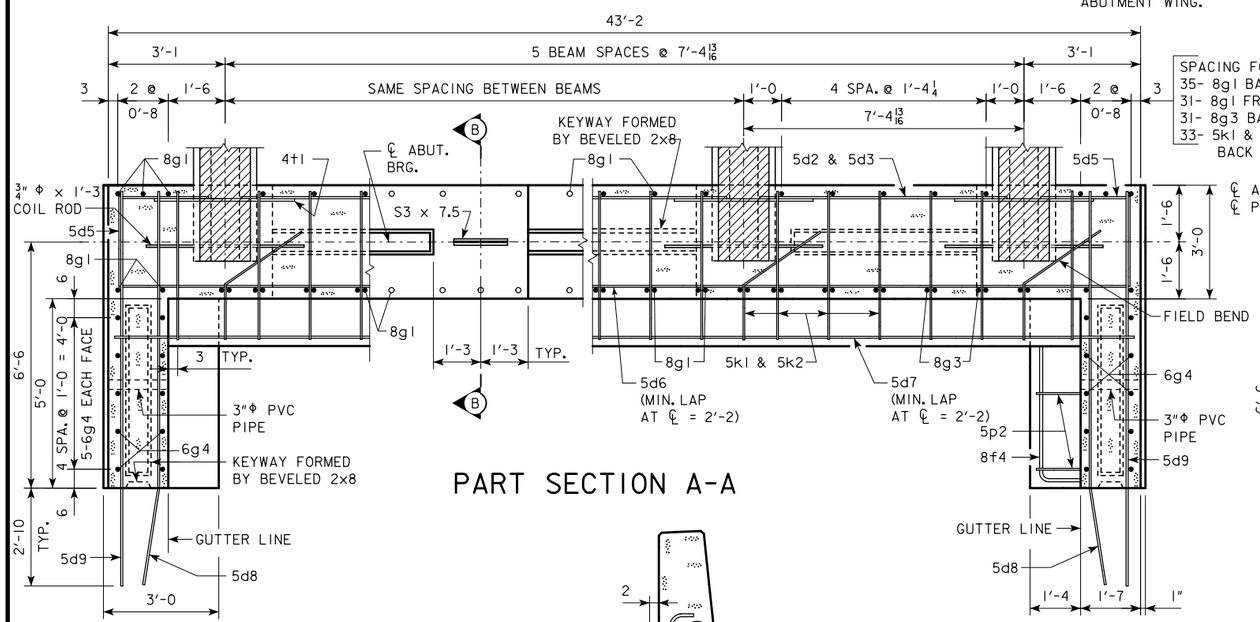

SPACING FOR:
35- 8g1 BACK FACE
31- 8g1 FRONT FACE
31- 8g3 BACK FACE
33- 5k1 & 5k2 BACK FACE

PART SECTION A-A

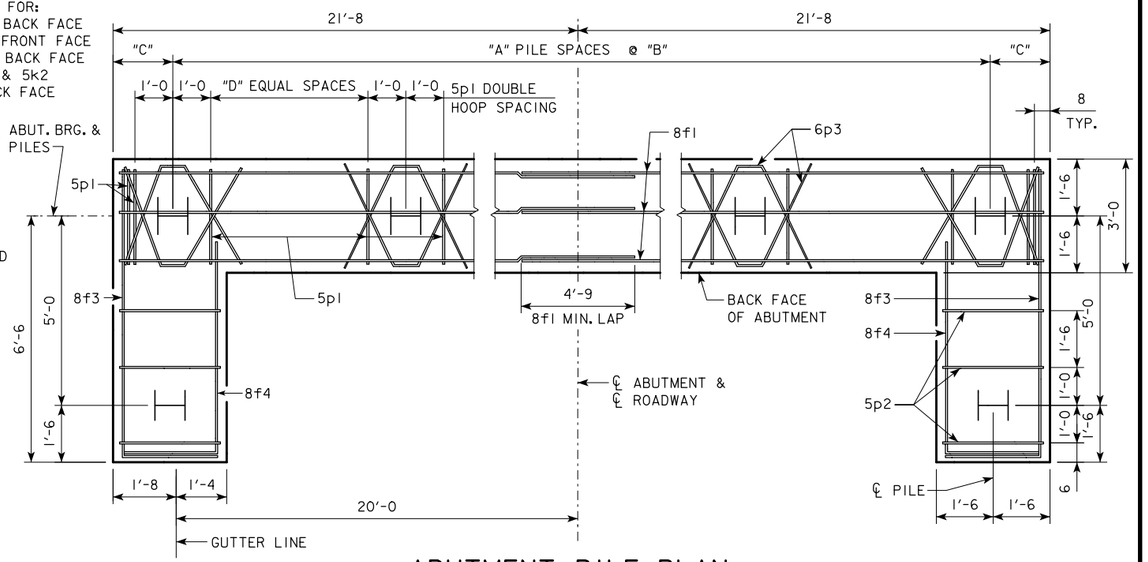

ABUTMENT PILE PLAN

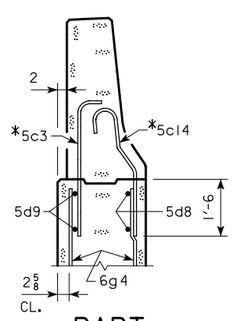

PART SECTION C-C

* NOTE: SEE BARRIER RAIL SHEET FOR DETAILS. REINFORCING BARS 5c3 AND 5c14 ARE INCLUDED IN BARRIER RAIL QUANTITIES.

ABUTMENT PILE SPACING		℄-℄ ABUT. BRG.	201'-4	213'-10	226'-4	243'-0
WITH STEEL H-PILES	"A" PILE SPACES		7	7	7	8
	"B" (FT. - IN.)		5'-6	5'-6	5'-6	4'-10
	"C" (FT. - IN.)		2'-5	2'-5	2'-5	2'-4
	"D" EQUAL SPACES		3	3	3	3
	NO. OF PILES PER ABUT.		10	10	10	11
	PU, STRENGTH I DESIGN LOAD (KIPS)		136	140	145	136

NOTE: PU, STRENGTH I DESIGN LOAD (KIPS) IS NOT THE VALUE USED IN THE FIELD FOR DRIVING PILES.
NOTE: THE PILE TYPE AND NUMBER OF PILES ARE TO BE INCLUDED ON THE SUMMARY QUANTITIES SHEET IN THE PLAN.

LATEST REVISION DATE

APPROVED BY BRIDGE ENGINEER

IOWA DOT Highway Division

STANDARD DESIGN - 40' ROADWAY, THREE SPAN BRIDGE

PRETENSIONED PRESTRESSED CONCRETE BEAM BRIDGES

SEPTEMBER, 2014

ABUTMENT DETAILS

0° SKEW C BEAMS

H40-06-14

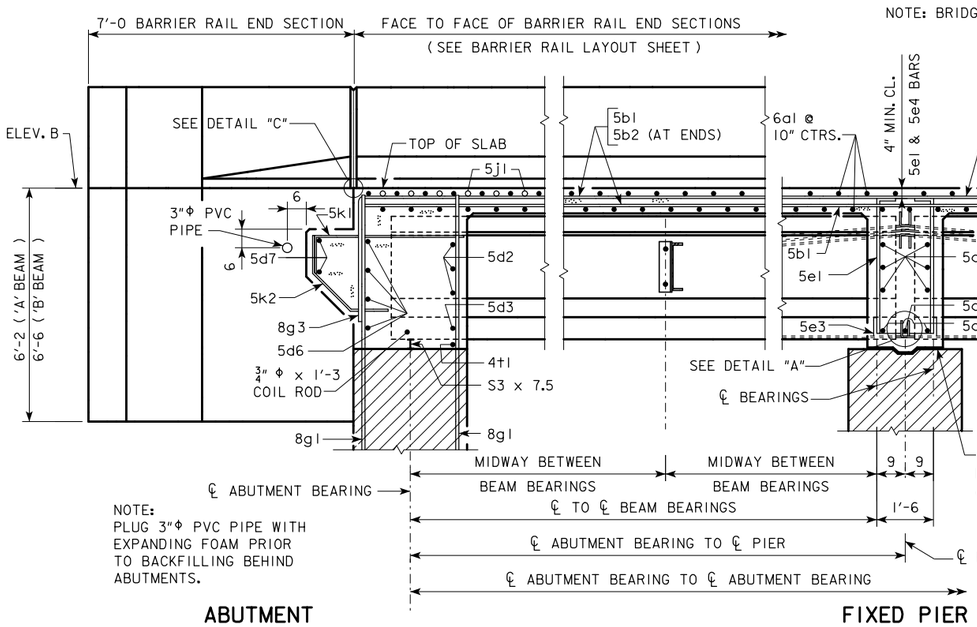

NOTE:
PLUG 3"Φ PVC PIPE WITH EXPANDING FOAM PRIOR TO BACKFILLING BEHIND ABUTMENTS.

PART LONGITUDINAL SECTION NEAR GUTTER

(FOR DETAILS OF INTERMEDIATE DIAPHRAGM SEE SHEET H40-38-14)

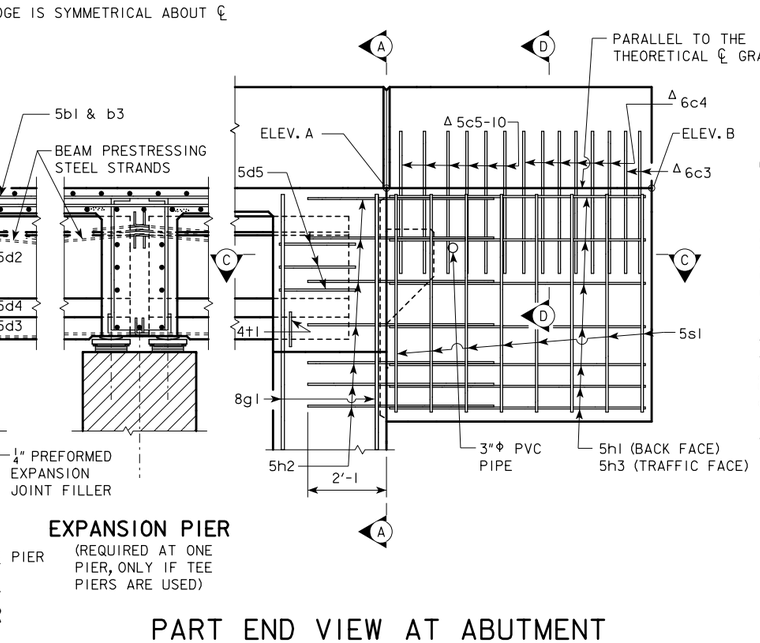

EXPANSION PIER

(REQUIRED AT ONE PIER, ONLY IF TEE PIERS ARE USED)

PART END VIEW AT ABUTMENT

PROVIDE ELEVATIONS A AND B IN THE BRIDGE PLAN SHEETS.

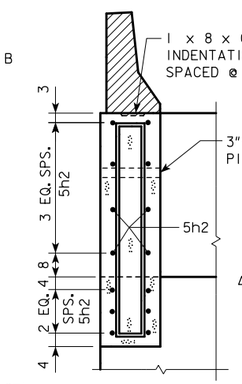

SECTION A-A

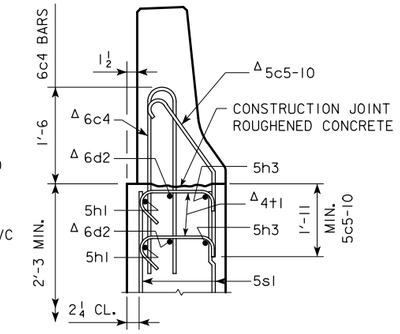

SECTION D-D

Δ NOTE:
SEE END SECTION DETAILS IN THESE PLANS FOR DETAILS OF BARRIER RAIL END SECTION. REINFORCING BARS 6c3, 6c4, 5c5-10, 6d2 & 4t1 ARE INCLUDED IN THE BARRIER RAIL QUANTITIES.

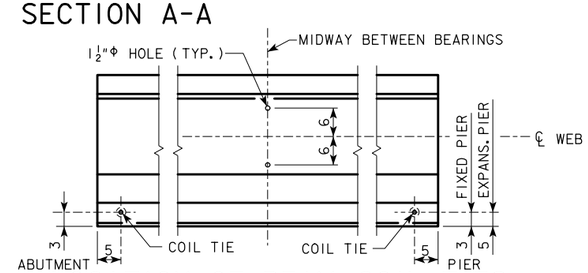

LOCATION OF BEAM COIL TIES AND STEEL DIAPHRAGM BOLT HOLES

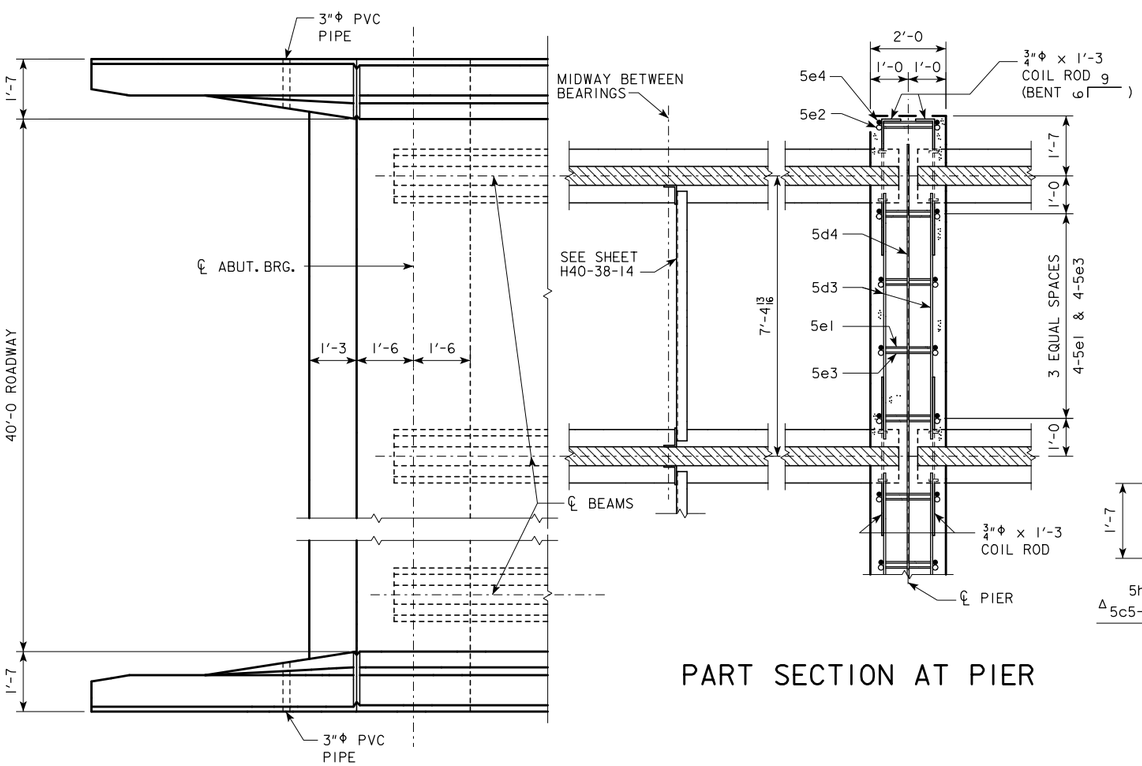

PART PLAN

PART SECTION AT PIER

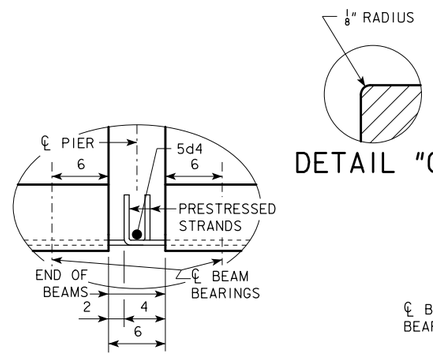

DETAIL "A"

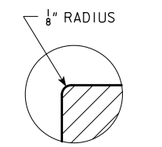

DETAIL "C"

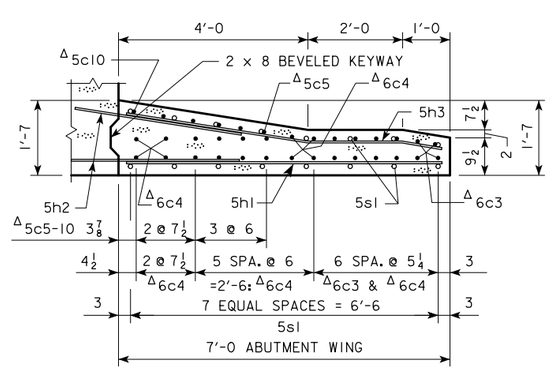

PART SECTION C-C

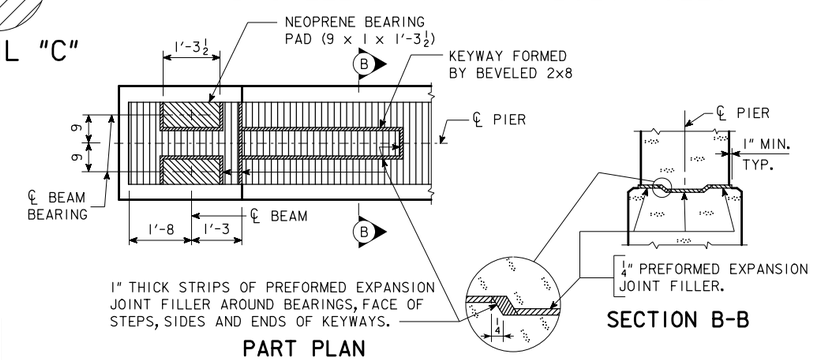

PART PLAN

SECTION B-B

TOP OF FIXED PIER DETAILS

(SEE SHEET H40-44-14 FOR EXPANSION PIER BEARING DETAILS)

LATEST REVISION DATE

APPROVED BY BRIDGE ENGINEER

IOWA DOT Highway Division

STANDARD DESIGN - 40' ROADWAY, THREE SPAN BRIDGE

PRETENSIONED PRESTRESSED CONCRETE BEAM BRIDGES

SEPTEMBER, 2014

LONGITUDINAL SECTION

0° SKEW A & B BEAMS

H40-07-14

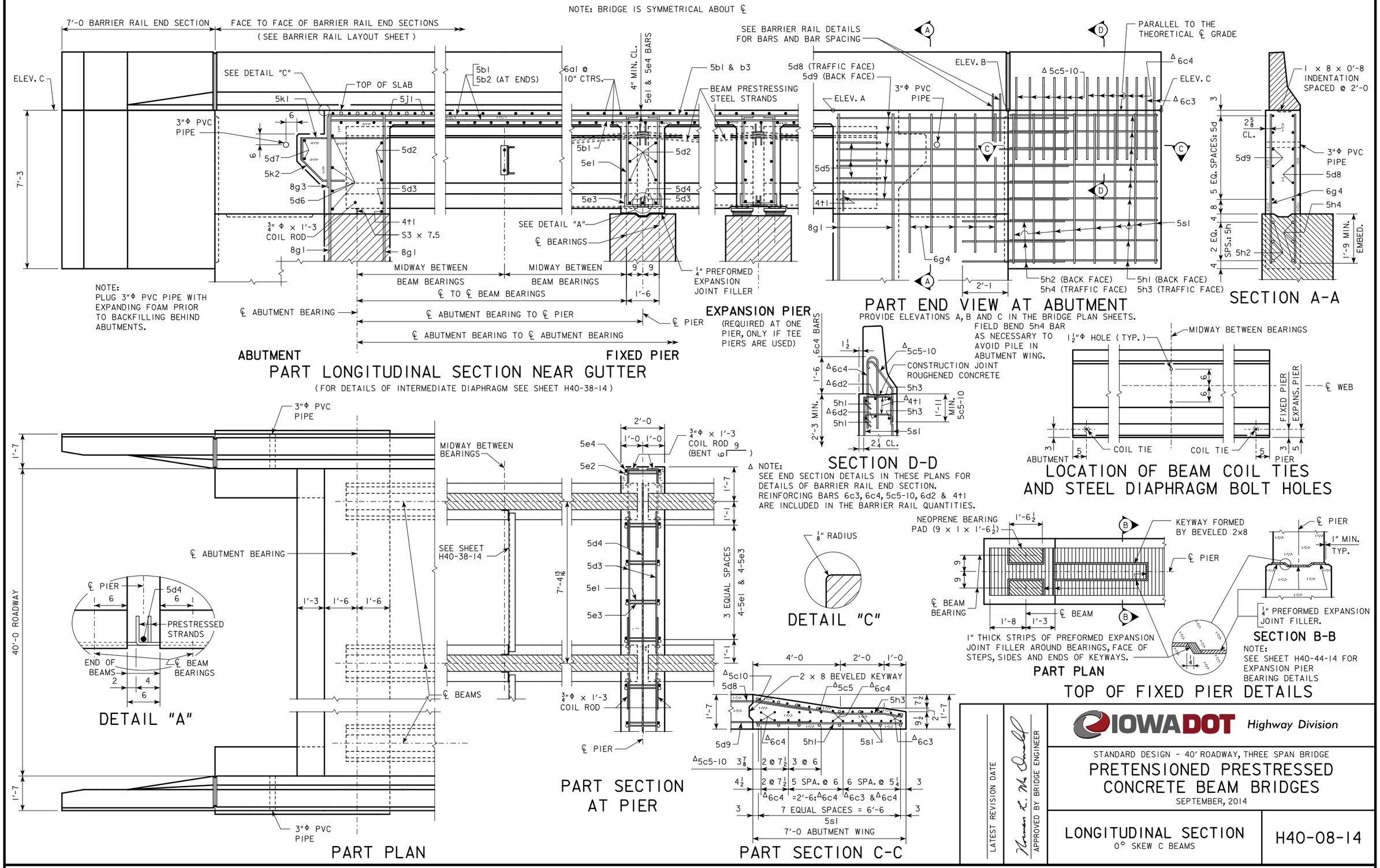
NOTE: BRIDGE IS SYMMETRICAL ABOUT ℄
7'-0 BARRIER RAIL END SECTION
FACE TO FACE OF BARRIER RAIL END SECTIONS
(SEE BARRIER RAIL LAYOUT SHEET)
ELEV. C
SEE DETAIL "C"
TOP OF SLAB
5k1
5j1
3"Φ PVC PIPE
5d7
5k2
8g3
5d6
5d2
5d3
3/4" Φ x 1'-3 COIL ROD
4t1
S3 x 7.5
8g1
7'-3
5b1
5b2 (AT ENDS)
6a1 @ 10" CTRS.
4" MIN. CL.
5e1 & 5e4 BARS
5e1
5e3
5d4
SEE DETAIL "A"
℄ BEARINGS
5b1 & b3
BEAM PRESTRESSING STEEL STRANDS
1/4" PREFORMED EXPANSION JOINT FILLER
MIDWAY BETWEEN BEAM BEARINGS
℄ TO ℄ BEAM BEARINGS
℄ ABUTMENT BEARING
℄ ABUTMENT BEARING TO ℄ PIER
℄ ABUTMENT BEARING TO ℄ ABUTMENT BEARING
℄ PIER
ABUTMENT
FIXED PIER
NOTE:
PLUG 3"Φ PVC PIPE WITH EXPANDING FOAM PRIOR TO BACKFILLING BEHIND ABUTMENTS.
PART LONGITUDINAL SECTION NEAR GUTTER
(FOR DETAILS OF INTERMEDIATE DIAPHRAGM SEE SHEET H40-38-14)
EXPANSION PIER
(REQUIRED AT ONE PIER, ONLY IF TEE PIERS ARE USED)
SEE BARRIER RAIL DETAILS FOR BARS AND BAR SPACING
5d8 (TRAFFIC FACE)
5d9 (BACK FACE)
ELEV. A
ELEV. B
3"Φ PVC PIPE
5d5
4t1
8g1
6g4
Δ 5c5-10
Δ 6c4
Δ 6c3
5s1
PARALLEL TO THE THEORETICAL ℄ GRADE
2'-1
5h2 (BACK FACE)
5h4 (TRAFFIC FACE)
5h1 (BACK FACE)
5h3 (TRAFFIC FACE)
PART END VIEW AT ABUTMENT
PROVIDE ELEVATIONS A, B AND C IN THE BRIDGE PLAN SHEETS.
1 x 8 x 0'-8 INDENTATION SPACED @ 2'-0
5 EQ. SPACES: 5d
2 EQ. SPS.: 5h
2 5/8 CL.
5d9
5d8
6g4
5h4
5h2
1'-9 MIN. EMBED.
SECTION A-A
6c4 BARS
5c5-10
CONSTRUCTION JOINT ROUGHENED CONCRETE
5h3
5h1
5s1
2'-3 MIN.
1'-11 MIN. 5c5-10
2 1/4 CL.
SECTION D-D
FIELD BEND 5h4 BAR AS NECESSARY TO AVOID PILE IN ABUTMENT WING.
1 1/2"Φ HOLE (TYP.)
MIDWAY BETWEEN BEARINGS
℄ WEB
FIXED PIER
EXPANS. PIER
COIL TIE
ABUTMENT
PIER
LOCATION OF BEAM COIL TIES AND STEEL DIAPHRAGM BOLT HOLES
Δ NOTE:
SEE END SECTION DETAILS IN THESE PLANS FOR DETAILS OF BARRIER RAIL END SECTION.
REINFORCING BARS 6c3, 6c4, 5c5-10, 6d2 & 4t1 ARE INCLUDED IN THE BARRIER RAIL QUANTITIES.
3"Φ PVC PIPE
1'-7
40'-0 ROADWAY
℄ ABUTMENT BEARING
℄ PIER
5d4
PRESTRESSED STRANDS
END OF BEAMS
℄ BEAM BEARINGS
DETAIL "A"
MIDWAY BETWEEN BEARINGS
SEE SHEET H40-38-14
1'-3
1'-6
℄ BEAMS
PART PLAN
2'-0
1'-0
3/4"Φ x 1'-3 COIL ROD (BENT 6 1/2")
5e4
5e2
5d4
5d3
5e1
5e3
7'-4 13/16
3 EQUAL SPACES
4-5e1 & 4-5e3
3/4"Φ x 1'-3 COIL ROD
℄ PIER
PART SECTION AT PIER
1/8" RADIUS
DETAIL "C"
4'-0
2'-0
2 x 8 BEVELED KEYWAY
Δ5c10
5d8
Δ5c5
Δ6c4
5h3
5d9
Δ6c4
5h1
5s1
Δ6c3
Δ5c5-10 3 7/8
2 @ 7 1/2
3 @ 6
4 1/2
2 @ 7 1/2
5 SPA. @ 6
6 SPA. @ 5 1/4
Δ6c4 =2'-6:Δ6c4
Δ6c3 &Δ6c4
7 EQUAL SPACES = 6'-6
5s1
7'-0 ABUTMENT WING
PART SECTION C-C
NEOPRENE BEARING PAD (9 x 1 x 1'-6 1/2)
1'-6 1/2
KEYWAY FORMED BY BEVELED 2x8
℄ PIER
℄ BEAM BEARING
℄ BEAM
1'-8
1'-3
1" THICK STRIPS OF PREFORMED EXPANSION JOINT FILLER AROUND BEARINGS, FACE OF STEPS, SIDES AND ENDS OF KEYWAYS.
PART PLAN
1" MIN. TYP.
1/4" PREFORMED EXPANSION JOINT FILLER.
SECTION B-B
NOTE:
SEE SHEET H40-44-14 FOR EXPANSION PIER BEARING DETAILS
TOP OF FIXED PIER DETAILS
LATEST REVISION DATE
APPROVED BY BRIDGE ENGINEER
IOWA DOT Highway Division
STANDARD DESIGN - 40' ROADWAY, THREE SPAN BRIDGE
PRETENSIONED PRESTRESSED CONCRETE BEAM BRIDGES
SEPTEMBER, 2014
LONGITUDINAL SECTION
0° SKEW C BEAMS
H40-08-14

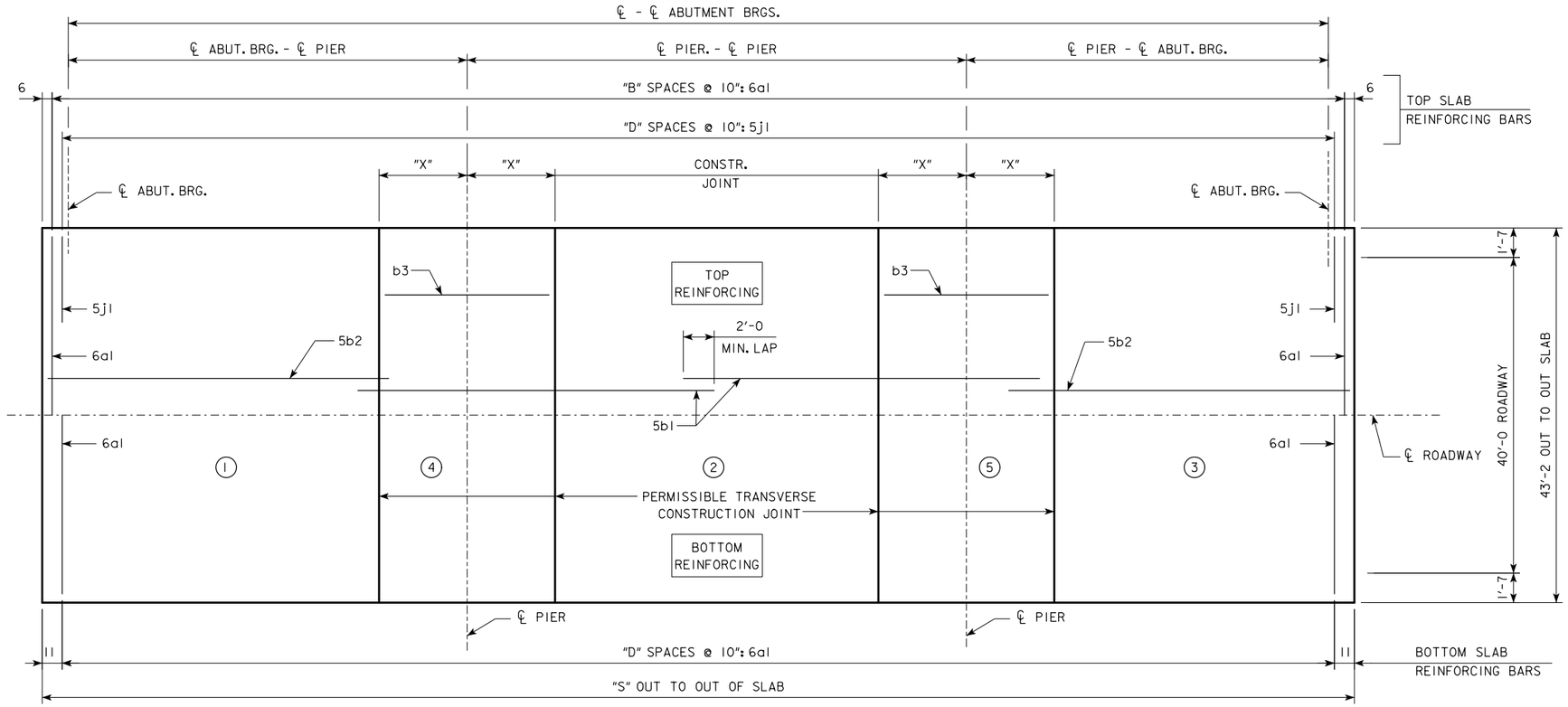

SLAB LAYOUT

ESTIMATED QUANTITIES
(SUPERSTRUCTURE PLUS INTEGRAL ABUTMENTS)

℄-℄ ABUT. BRG.		138'-10	151'-4	163'-10	176'-4	188'-10	201'-4	213'-10	226'-4	243'-0
PRETENSIONED PRESTRESSED CONCRETE BEAM, CENTER SPAN	NO.	6-A50	6-A55	6-B59	6-B63	6-B67	6-C71	6-C75	6-C80	6-C80
PRETENSIONED PRESTRESSED CONCRETE BEAM, END SPAN	NO.	12-A42	12-A46	12-B50	12-B55	12-B59	12-C63	12-C67	12-C71	12-C80
CONCRETE RAIL (BARRIER OR OPEN)	L.F.	311.7	336.7	361.7	386.7	411.7	456.7	481.7	506.7	540.0
NO. OF WOOD PILES, TREATED FOR TWO ABUTMENTS	NO.	28	30	32	32	34	-----	-----	-----	-----
NO. OF STEEL H-PILES FOR TWO ABUTMENTS (HP 10 x 57)	NO.	12	14	14	14	16	20	20	20	22
PREBORED HOLES (w/ WOOD PILES)	L.F.	280	300	320	320	340	-----	-----	-----	-----
PREBORED HOLES (w/ STEEL H-PILES)	L.F.	120	140	140	140	160	200	200	200	220
WING ARMORING	S.Y.	3.5	3.5	3.5	3.5	3.5	5.7	5.7	5.7	5.7

NOTE:
FOR QUANTITIES OF STRUCTURAL CONCRETE, REINFORCING STEEL AND STRUCTURAL STEEL, REFER TO THE SUMMARY QUANTITIES SHEET IN THE BRIDGE PLANS.

Δ NOTE:
CONCRETE QUANTITIES SHALL BE LISTED ON THE SUMMARY QUANTITIES SHEET.

Δ CONCRETE PLACEMENT QUANT.
(SUPERSTRUCTURE PLUS INTEGRAL ABUTMENTS)

℄-℄ ABUT. BRG.			138'-10	151'-4	163'-10	176'-4	188'-10	201'-4	213'-10	226'-4	243'-0
SLAB INCLUDING HAUNCH, ABUT. DIAPHRAGM, & WINGWALLS** , SECTIONS 1 & 3	WITH BARRIER RAIL	C.Y.	118.2	126.2	139.6	147.8	155.8	173.2	181.6	190.2	209.2
	WITH OPEN RAIL	C.Y.	119.5	127.6	141.2	149.5	157.7	175.1	183.6	192.4	211.6
SLAB INCLUDING HAUNCH, SECTION 2	WITH BARRIER RAIL	C.Y.	43.5	47.0	50.5	54.0	57.3	61.1	64.6	68.1	68.1
	WITH OPEN RAIL	C.Y.	44.2	47.8	51.3	54.9	58.3	62.1	65.6	69.2	69.2
SLAB INCLUDING HAUNCH & PIER DIAPHRAGM, SECTIONS 4 & 5	WITH BARRIER RAIL	C.Y.	44.8	47.2	52.4	54.8	57.6	61.8	64.0	66.4	66.4
	WITH OPEN RAIL	C.Y.	45.3	47.7	53.0	55.4	58.2	62.4	64.7	67.1	67.1
ABUTMENT WINGS		C.Y.	7.2	7.2	7.6	7.6	7.6	8.4	8.4	8.4	8.4
ABUTMENT FOOTINGS (w/ WOOD PILES)		C.Y.	33.4	33.3	33.1	33.1	33.0	-----	-----	-----	-----
ABUTMENT FOOTINGS (w/ STEEL H PILES)		C.Y.	35.0	35.0	35.0	35.0	35.0	43.0	43.0	43.0	43.0

GENERAL DATA

	℄-℄ ABUT. BRG.		138'-10	151'-4	163'-10	176'-4	188'-10	201'-4	213'-10	226'-4	243'-0
VERTICAL CURVE	TOP OF SLAB TO ABUT. CONSTR. JT. AT C.L. ABUT. BRG.	"U"	3'-8	3'-7 13/16	4'-2 7/8	4'-2 13/16	4'-2 7/8	4'-8 9/16	4'-8 11/16	4'-9 1/8	4'-9 7/16
	TOP OF SLAB TO PIER TOP AT C.L. PIER*	"U"	3'-6 3/8	3'-6 9/16	4'-1 5/16	4'-1 1/2	4'-1 7/8	4'-7 5/16	4'-7 1/4	4'-7 1/2	4'-7 1/2
STRAIGHT GRADE	TOP OF SLAB TO ABUT. CONSTR. JT. AT C.L. ABUT. BRG.	"U"	3'-8 1/16	3'-7 7/8	4'-2 15/16	4'-2 15/16	4'-3	4'-8 3/4	4'-8 7/8	4'-9 5/16	4'-9 7/8
	TOP OF SLAB TO PIER TOP AT C.L. PIER*	"U"	3'-6 9/16	3'-6 3/4	4'-1 9/16	4'-1 13/16	4'-2 1/4	4'-7 11/16	4'-7 11/16	4'-8	4'-8
D.L. PIER REACTION (D.L. + F.W.S.) SERVICE LOADS		KIPS	430.0	464.6	530.0	566.5	603.2	722.1	763.1	804.5	844.8
L.L. PIER REACTION (HL93) NO IMPACT SERVICE LOADS		KIPS	264.7	274.5	283.9	293.1	302.2	311.0	322.9	341.9	362.6
NO. OF SPACES FOR 6a1 BARS (TOP)		"B"	169	184	199	214	229	244	259	274	294
NO. OF SPACES FOR 6a1 BARS (BOTTOM) AND 5j1 BARS (TOP)		"D"	168	183	198	213	228	243	258	273	293
OUT TO OUT OF SLAB		"S"	141'-10	154'-4	166'-10	179'-4	191'-10	204'-4	216'-10	229'-4	246'-0
SLAB TRANSVERSE CONSTR. JT. DISTANCE FROM C.L. PIER		"X"	6'-7	7'-1	7'-7	8'-1	8'-8	9'-2	9'-8	10'-2	10'-2

NOTE: CONCRETE DECK SHALL BE PLACED IN SECTIONS AND SEQUENCES INDICATED. ALTERNATE PROCEDURES FOR PLACING DECK CONCRETE MAY BE SUBMITTED FOR APPROVAL TOGETHER WITH A STATEMENT OF THE PROPOSED METHOD AND EVIDENCE THAT THE CONTRACTOR POSSESSES THE NECESSARY EQUIPMENT AND FACILITIES TO ACCOMPLISH THE REQUIRED RESULTS. FOR APPROVED ALTERNATE PROCEDURES THE ENGINEER SHALL DETERMINE IF A RETARDING ADMIXTURE IS REQUIRED TO MAINTAIN PLASTICITY OF THE CONCRETE DECK DURING PLACEMENT.

* VALUES SHOWN ARE FOR FIXED PIERS ONLY AND ALLOW FOR 1/16 INCH DEFLECTION OF THE 1 INCH NEOPRENE BEARING PAD. AT EXPANSION PIER LOCATIONS ADD 3 1/16 INCHES TO "U" VALUES SHOWN.

** WINGWALLS APPLY ONLY TO BRIDGES USING "C" BEAMS.

07-15
LATEST REVISION DATE

APPROVED BY BRIDGE ENGINEER

IOWA DOT Highway Division

STANDARD DESIGN - 40' ROADWAY, THREE SPAN BRIDGE

PRETENSIONED PRESTRESSED CONCRETE BEAM BRIDGES

SEPTEMBER, 2014

SUPERSTRUCTURE DETAILS
0° SKEW

H40-09-14

REVISED 07-2015 - CHANGED CONCRETE PLACEMENT NOTE TO ACCOUNT FOR THE POSSIBLE ADDITION OF A RETARDING ADMIXTURE TO THE CONCRETE.

REINFORCING BAR LIST

ONE SUPERSTRUCTURE AND TWO ABUTMENTS

EPOXY COATED REINFORCING

BAR	LOCATION	SHAPE	NO.	LENGTH	WEIGHT	NO.	LENGTH	WEIGHT	NO.	LENGTH	WEIGHT	NO.	LENGTH	WEIGHT	NO.	LENGTH	WEIGHT	NO.	LENGTH	WEIGHT	NO.	LENGTH	WEIGHT	NO.	LENGTH	WEIGHT	NO.	LENGTH	WEIGHT	NO.	LENGTH	WEIGHT
	℄-℄ ABUT. BRG.		138'-10			151'-4			163'-10			176'-4			188'-10			201'-4			213'-10			226'-4			243'-0				
	℄-℄ BEAM BRG.		42'-6	50'-10	42'-6	46'-8	55'-0	46'-8	50'-10	59'-2	50'-10	55'-0	63'-4	55'-0	59'-2	67'-6	59'-2	63'-4	71'-8	63'-4	67'-6	75'-10	67'-6	71'-8	80'-0	71'-8	80'-0	80'-0	80'-0			
	BEAM SERIES		A BEAM			A BEAM			B BEAM			B BEAM			B BEAM			C BEAM			C BEAM			C BEAM			C BEAM					
6a1	SLAB TRANSV. TOP & BOTT.		339	42'-10	21,810	369	42'-10	23,740	399	42'-10	25,670	429	42'-10	27,600	459	42'-10	29,530	489	42'-10	31,460	519	42'-10	33,390	549	42'-10	35,320	589	42'-10	37,894			
5b1	SLAB LONGITUDINAL, TOP & BOTT.		202	40'-0	8,427	202	40'-0	8,427	303	40'-0	12,641	303	40'-0	12,641	303	40'-0	12,641	404	40'-0	16,855	404	40'-0	16,855	404	40'-0	16,855	505	40'-0	21,069			
5b2	SLAB LONGITUDINAL, TOP & BOTT., ENDS		202	33'-9	7,111	202	40'-0	8,427	202	27'-3	5,741	202	33'-6	7,058	202	39'-9	8,375	202	27'-0	5,689	202	33'-3	7,005	202	39'-6	8,322	202	28'-10	6,075			
6b3	SLAB LONGITUDINAL, TOP @ PIERS		92	12'-10	1,773	92	13'-10	1,912	92	14'-10	2,050	—	—	—	—	—	—	—	—	—	—	—	—	—	—	—	—	—	—			
7b3	SLAB LONGITUDINAL, TOP @ PIERS		—	—	—	—	—	—	—	—	—	92	15'-10	2,977	92	17'-0	3,197	92	18'-0	3,385	—	—	—	—	—	—	—	—	—			
8b3	SLAB LONGITUDINAL, TOP @ PIERS		—	—	—	—	—	—	—	—	—	—	—	—	—	—	—	—	—	—	92	19'-0	4,667	92	20'-0	4,913	92	20'-0	4,913			
5d1	PIER DIAPH. ENDS		12	3'-6	44	12	3'-6	44	12	3'-6	44	12	3'-6	44	12	3'-6	44	12	3'-6	44	12	3'-6	44	12	3'-6	44	12	3'-6	44			
5d2	PIER & ABUT. DIAPH. LONGIT.		90	6'-8	626	90	6'-8	626	90	6'-8	626	90	6'-8	626	90	6'-8	626	90	6'-5	602	90	6'-5	602	90	6'-5	602	90	6'-5	602			
5d3	PIER & ABUT. DIAPH. LONGIT.		30	5'-9	180	30	5'-9	180	30	5'-9	180	30	5'-9	180	30	5'-9	180	30	5'-6	172	30	5'-6	172	30	5'-6	172	30	5'-6	172			
5d4	PIER DIAPH. LONGIT.		2	39'-9	83	2	39'-9	83	2	39'-9	83	2	39'-9	83	2	39'-9	83	2	39'-9	83	2	39'-9	83	2	39'-9	83	2	39'-9	83			
5d5	ABUT. DIAPH. ENDS		12	5'-0	63	12	5'-0	63	12	5'-0	63	12	5'-0	63	12	5'-0	63	12	5'-0	63	12	5'-0	63	12	5'-0	63	12	5'-0	63			
5d6	ABUT. DIAPH. LONGIT. B.F.		16	22'-6	375	16	22'-6	375	16	22'-6	375	16	22'-6	375	16	22'-6	375	16	22'-6	375	16	22'-6	375	16	22'-6	375	16	22'-6	375			
5d7	PAVING NOTCH LONGIT.		8	22'-2	185	8	22'-2	185	8	22'-2	185	8	22'-2	185	8	22'-2	185	8	22'-2	185	8	22'-2	185	8	22'-2	185	8	22'-2	185			
5d8	ABUT. DIAPH. WING EXT. LONGIT.		—	—	—	—	—	—	—	—	—	—	—	—	—	—	—	24	10'-9	269	24	10'-9	269	24	10'-9	269	24	10'-9	269			
5d9	ABUT. DIAPH. WING EXT. LONGIT.		—	—	—	—	—	—	—	—	—	—	—	—	—	—	—	24	10'-8	267	24	10'-8	267	24	10'-8	267	24	10'-8	267			
5e1	PIER DIAPH. HOOPS		40	8'-5	351	40	8'-5	351	40	9'-8	403	40	9'-8	403	40	9'-8	403	40	10'-8	445	40	10'-8	445	40	10'-8	445	40	10'-8	445			
5e2	PIER DIAPH. TIES ENDS		4	2'-7	11	4	2'-7	11	4	2'-7	11	4	2'-7	11	4	2'-7	11	4	2'-7	11	4	2'-7	11	4	2'-7	11	4	2'-7	11			
5e3	PIER DIAPH. TIES		40	2'-9	115	40	2'-9	115	40	2'-9	115	40	2'-9	115	40	2'-9	115	40	2'-9	115	40	2'-9	115	40	2'-9	115	40	2'-9	115			
5e4	PIER DIAPH. HOOPS ENDS		4	8'-3	34	4	8'-3	34	4	9'-6	40	4	9'-6	40	4	9'-6	40	4	10'-6	44	4	10'-6	44	4	10'-6	44	4	10'-6	44			
8f1	ABUT. FOOTING LONGIT.		36	23'-10	2,291	36	23'-10	2,291	36	23'-10	2,291	36	23'-10	2,291	36	23'-10	2,291	36	23'-11	2,299	36	23'-11	2,299	36	23'-11	2,299	36	23'-11	2,299			
8f3	ABUT. EXTENSION LONGIT.		—	—	—	—	—	—	—	—	—	—	—	—	—	—	—	16	10'-1	431	16	10'-1	431	16	10'-1	431	16	10'-1	431			
8f4	ABUT. EXTENSION LONGIT.		—	—	—	—	—	—	—	—	—	—	—	—	—	—	—	16	8'-6	363	16	8'-6	363	16	8'-6	363	16	8'-6	363			
8g1	ABUT. VERT.		136	6'-8	2,421	136	6'-8	2,421	136	7'-3	2,633	136	7'-3	2,633	136	7'-3	2,633	132	7'-9	2,731	132	7'-9	2,731	132	7'-9	2,731	132	7'-10	2,761			
8g3	ABUT. DIAPH. VERT. B.F.		62	15'-3	2,524	62	15'-3	2,524	62	15'-3	2,524	62	15'-3	2,524	62	15'-3	2,524	62	15'-9	2,607	62	15'-9	2,607	62	15'-9	2,607	62	15'-9	2,607			
6g4	ABUT. DIAPH. WING EXT. VERT.		—	—	—	—	—	—	—	—	—	—	—	—	—	—	—	40	6'-6	391	40	6'-6	391	40	6'-7	396	40	6'-7	396			
5h1	ABUT. WING HORIZ. B.F.		28	6'-8	195	28	6'-8	195	28	6'-8	195	28	6'-8	195	28	6'-8	195	36	6'-8	250	36	6'-8	250	36	6'-8	250	36	6'-8	250			
5h2	ABUT. TO WING ANCHOR		56	4'-11	287	56	4'-11	287	56	4'-11	287	56	4'-11	287	56	4'-11	287	12	4'-11	62	12	4'-11	62	12	4'-11	62	12	4'-11	62			
5h3	ABUT. WING HORIZ. TRAFFIC FACE		28	6'-9	197	28	6'-9	197	28	6'-9	197	28	6'-9	197	28	6'-9	197	36	6'-9	253	36	6'-9	253	36	6'-9	253	36	6'-9	253			
5h4	ABUT. TO WING ANCHOR		—	—	—	—	—	—	—	—	—	—	—	—	—	—	—	12	4'-11	62	12	4'-11	62	12	4'-11	62	12	4'-11	62			
5j1	TOP OF SLAB TRANSV. (AT RAIL)		338	6'-3	2,203	368	6'-3	2,399	398	6'-3	2,594	428	6'-3	2,790	458	6'-3	2,986	488	6'-3	3,181	518	6'-3	3,377	548	6'-3	3,572	588	6'-3	3,833			
5k1	PAVING NOTCH		66	4'-9	327	66	4'-9	327	66	4'-9	327	66	4'-9	327	66	4'-9	327	66	4'-9	327	66	4'-9	327	66	4'-9	327	66	4'-9	327			
5k2	PAVING NOTCH		66	3'-5	235	66	3'-5	235	66	3'-5	235	66	3'-5	235	66	3'-5	235	66	3'-5	235	66	3'-5	235	66	3'-5	235	66	3'-5	235			
5p1	ABUTMENT HOOPS (WOOD/STEEL)		112/128	10'-6	1227/1402	120/128	10'-6	1314/1402	128/128	10'-6	1402/1402	128/128	10'-6	1402/1402	136/120	10'-6	1489/1314	128	10'-6	1,402	128	10'-6	1,402	128	10'-6	1,402	144	10'-6	1,577			
5p2	ABUTMENT HOOPS		—	—	—	—	—	—	—	—	—	—	—	—	—	—	—	24	10'-8	267	24	10'-8	267	24	10'-8	267	24	10'-8	267			
6p3	ABUT. BOTT. AT PILES		—	—	—	—	—	—	—	—	—	—	—	—	—	—	—	32	6'-8	320	32	6'-8	320	32	6'-8	320	36	6'-8	360			
5s1	WING VERT.		64	5'-10	389	64	5'-10	389	64	6'-2	412	64	6'-2	412	64	6'-2	412	64	6'-11	462	64	6'-11	462	64	6'-11	462	64	6'-11	462			
4t1	UNDER BEAMS AT ABUTMENTS		12	4'-6	36	12	4'-6	36	12	4'-6	36	12	4'-6	36	12	4'-6	36	12	4'-9	38	12	4'-9	38	12	4'-9	38	12	4'-9	38			
#2	PILE SPIRAL (WOOD/STEEL)*		28/12	38'-6	180/77	30/14	38'-6	193/90	32/14	38'-6	206/90	32/14	38'-6	206/90	34/16	38'-6	219/103	20	38'-6	129	20	38'-6	129	20	38'-6	129	22	38'-6	141			
	SPIRAL SPACERS, L $\frac{7}{8}\times\frac{7}{8}\times\frac{7}{8}\times$ 0.70 (WOOD/STL.)*		84/36	1'-10	108/46	90/42	1'-10	116/54	96/42	1'-10	123/54	96/42	1'-10	123/54	102/48	1'-10	131/62	60	1'-10	77	60	1'-10	77	60	1'-10	77	66	1'-10	85			
	*EPOXY COATING NOT REQUIRED																															
	SUB TOTAL W/ WOOD PILES**				53,808			57,497			61,689			66,059			69,830			—			—			—			—			
	SUB TOTAL W/ STEEL H-PILES**				53,818			57,420			61,504			65,874			69,470			75,951			80,675			84,368			89,435		
	**RAIL REINFORCING NOT INCLUDED																															

NOTE: REINFORCING STEEL QUANTITIES ARE TO BE INCLUDED ON THE SUMMARY QUANTITIES SHEET IN THE PLAN.

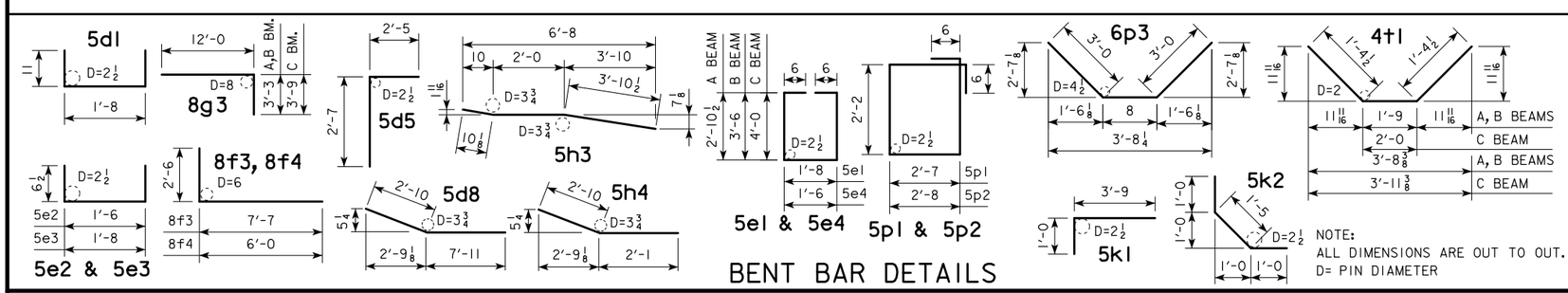

BENT BAR DETAILS

LATEST REVISION DATE

APPROVED BY BRIDGE ENGINEER

IOWA DOT Highway Division

STANDARD DESIGN - 40' ROADWAY, THREE SPAN BRIDGE

PRETENSIONED PRESTRESSED CONCRETE BEAM BRIDGES

SEPTEMBER, 2014

DECK & ABUTMENT REINF.

0° SKEW

H40-10-14

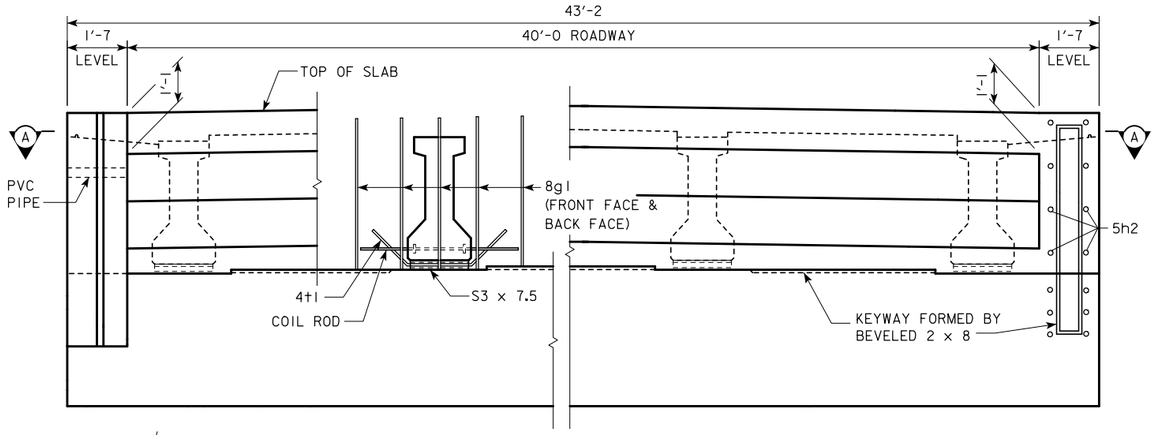

PART REAR ELEVATION AT ABUTMENT

NOTE: TOP OF ABUTMENT SHOWN FOR SOLID BARRIER RAIL

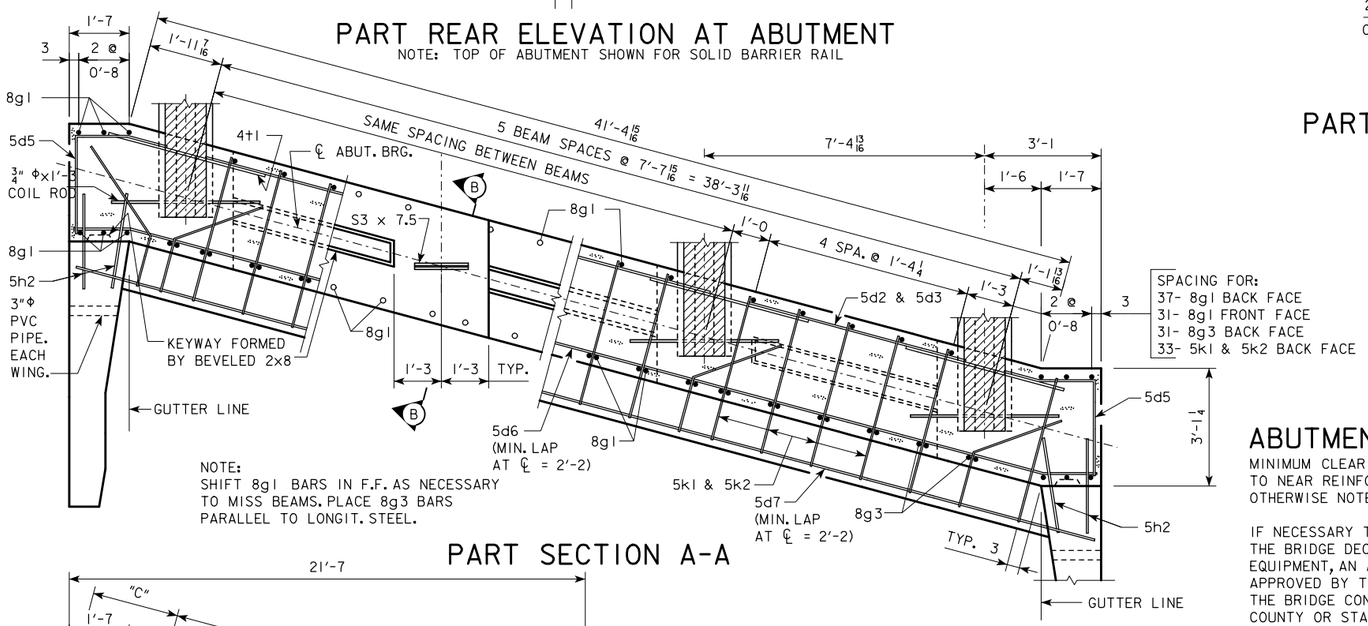

NOTE:
SHIFT 8g1 BARS IN F.F. AS NECESSARY TO MISS BEAMS. PLACE 8g3 BARS PARALLEL TO LONGIT. STEEL.

PART SECTION A-A

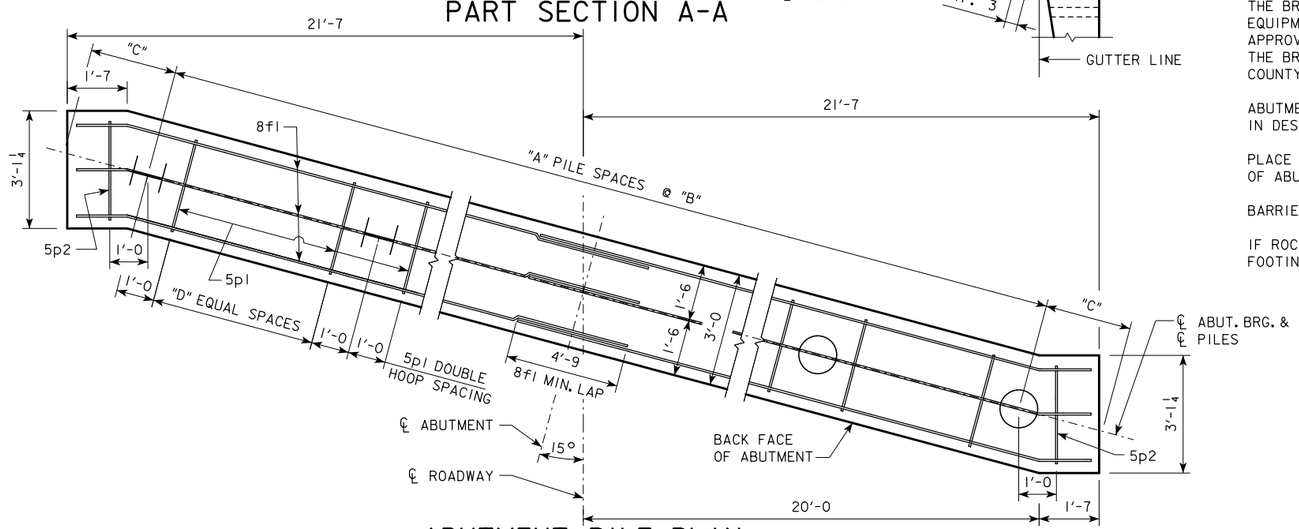

ABUTMENT PILE PLAN

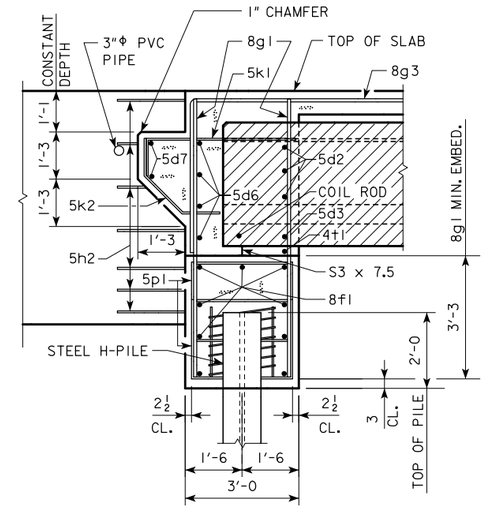

PART SECTION B-B

(FOR STEEL H-PILING)

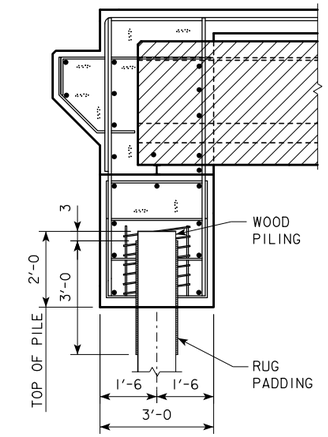

PART SECTION B-B

(FOR WOOD PILING)

NOTE:
THE SPIRAL AT THE TOP OF EACH PILE TO BE 7 TURNS OF NO. 2 BAR, 21" DIAMETER, 3" PITCH WITH 3 - L 7/8 x 7/8 x 1/8 SPACERS PUNCHED TO HOLD SPIRAL.

WOOD PILING NOTE:

AFTER PILES ARE CUT OFF, THE UPPER 3', EXCEPT AS SHOWN, IS TO BE WRAPPED WITH A DOUBLE THICKNESS OF RUG PADDING HELD IN PLACE BY TACKING WITH GALVANIZED ROOFING NAILS AND WRAPPED WITH #14 GAUGE GALVANIZED WIRE AT A 4" PITCH, CARE IS TO BE TAKEN NOT TO DAMAGE PADDING WHEN PLACING CONCRETE. RUG PADDING MAY BE EITHER OF THE FOLLOWING:
(1) HAIR AND JUTE RUG PADDING, RUBBERIZED ON BOTH SIDES, AND WEIGHING NOT LESS THAN 47 OZ. PER SQ. YD.
(2) BONDED URETHANE OR BONDED POLYFOAM WITH A MINIMUM DENSITY OF 5 LBS. PER CU. FT. AND SHALL BE AT LEAST 1/2 IN. THICK, (MATERIAL LESS THAN 1/2 IN. IN THICKNESS MAY BE USED, BUT WILL REQUIRE ADDITIONAL WRAPS FOR A TOTAL OF AT LEAST ONE INCH).

ABUTMENT NOTES:

MINIMUM CLEAR DISTANCE FROM FACE OF CONCRETE TO NEAR REINFORCING BAR IS TO BE 2" UNLESS OTHERWISE NOTED OR SHOWN.

IF NECESSARY TO PREVENT DAMAGE TO THE END OF THE BRIDGE DECK OR BACKWALL FROM CONSTRUCTION EQUIPMENT, AN APPROPRIATE METHOD OF PROTECTION APPROVED BY THE ENGINEER SHALL BE PROVIDED BY THE BRIDGE CONTRACTOR AT NO EXTRA COST TO THE COUNTY OR STATE.

ABUTMENT PILES SHALL BE DRIVEN TO VALUES SHOWN IN DESIGN PLANS.

PLACE 5h2 BAR AT 1:6 SLOPE TO MATCH TRAFFIC SIDE OF ABUTMENT WING FACE. (BOTH SIDES TYPICAL)

BARRIER RAIL NOT SHOWN IN DETAILS.

IF ROCK IS CLOSER THAN 15' BELOW ABUTMENT FOOTING, SPECIAL ANALYSIS MAY BE REQUIRED.

ABUTMENT PILE SPACING		℄-℄ ABUT. BRG.	138'-10	151'-4	163'-10	176'-4	188'-10
WITH WOOD PILES	"A" PILE SPACES		13	14	15	15	16
	"B" (FT. - IN.)		3'-0	2'-10	2'-8	2'-8	2'-6
	"C" (FT. - IN.)		2'-10 1/8	2'-6 1/8	2'-4 1/8	2'-4 1/8	2'-4 1/8
	"D" EQUAL SPACES		1	1	1	1	1
	NO. OF PILES PER ABUT.		14	15	16	16	17
	PU, STRENGTH I DESIGN LOAD (KIPS)		57	55	55	57	56
WITH STEEL H-PILES	"A" PILE SPACES		6	6	6	6	7
	"B" (FT. - IN.)		6'-8	6'-8	6'-8	6'-8	5'-8
	"C" (FT. - IN.)		2'-4 1/8	2'-4 1/8	2'-4 1/8	2'-4 1/8	2'-6 1/8
	"D" EQUAL SPACES		4	4	4	4	3
	NO. OF PILES PER ABUT.		7	7	7	7	8
	PU, STRENGTH I DESIGN LOAD (KIPS)		124	129	138	143	129

NOTE: Pu, STRENGTH I DESIGN LOAD (KIPS) IS NOT THE VALUE USED IN THE FIELD FOR DRIVING PILES.
NOTE: THE PILE TYPE AND NUMBER OF PILES ARE TO BE INCLUDED ON THE SUMMARY QUANTITIES SHEET IN THE PLAN.

LATEST REVISION DATE

APPROVED BY BRIDGE ENGINEER

IOWA DOT Highway Division

STANDARD DESIGN - 40' ROADWAY, THREE SPAN BRIDGE

PRETENSIONED PRESTRESSED CONCRETE BEAM BRIDGES

SEPTEMBER, 2014

ABUTMENT DETAILS

15° SKEW A & B BEAMS

H40-11-14

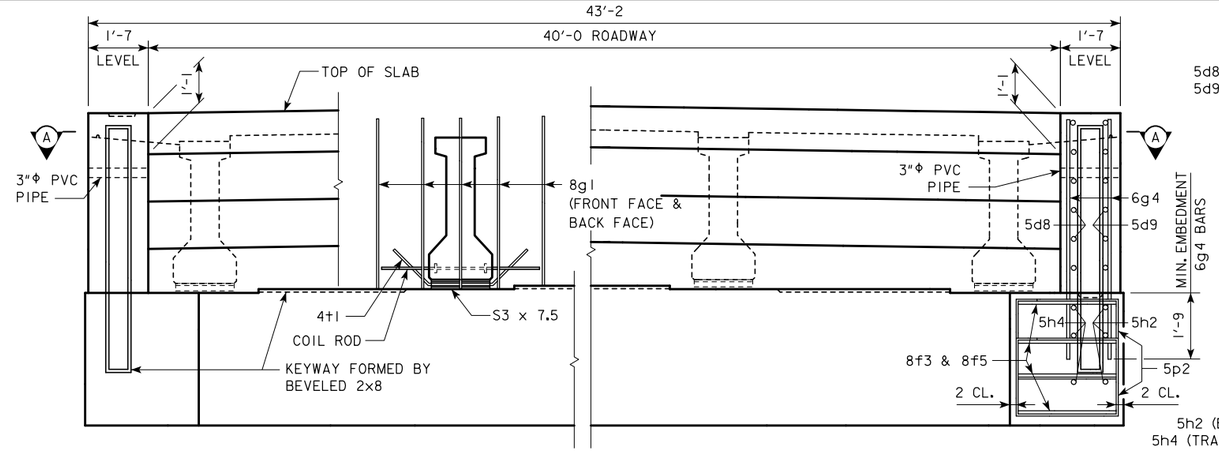

PART REAR ELEVATION AT ABUTMENT

NOTE: TOP OF ABUTMENT SHOWN FOR SOLID BARRIER RAIL

FIELD BEND 5h4 BAR AS NECESSARY TO AVOID PILE IN ABUTMENT WING.

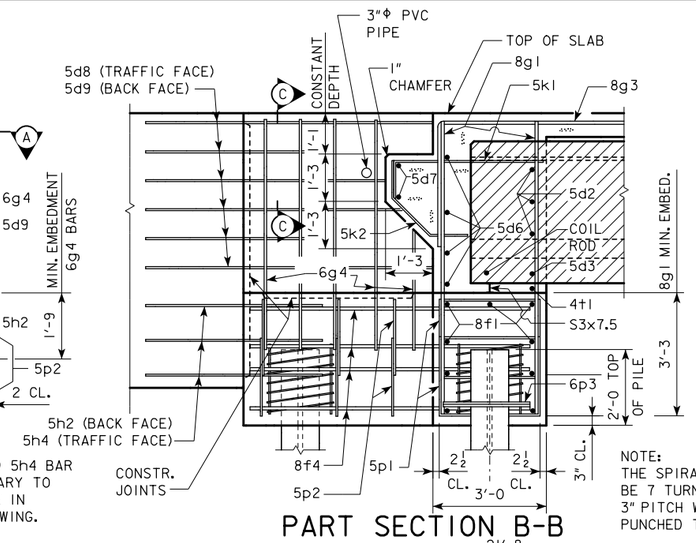

PART SECTION B-B

NOTE:
THE SPIRAL AT THE TOP OF EACH PILE TO BE 7 TURNS OF NO. 2 BAR, 21" DIAMETER, 3" PITCH WITH 3 - $L\frac{7}{8} \times \frac{7}{8} \times \frac{1}{8}$ SPACERS PUNCHED TO HOLD SPIRAL.

ABUTMENT NOTES:

MINIMUM CLEAR DISTANCE FROM FACE OF CONCRETE TO NEAR REINFORCING BAR IS TO BE 2" UNLESS OTHERWISE NOTED OR SHOWN.

IF NECESSARY TO PREVENT DAMAGE TO THE END OF THE BRIDGE DECK OR BACKWALL FROM CONSTRUCTION EQUIPMENT, AN APPROPRIATE METHOD OF PROTECTION APPROVED BY THE ENGINEER SHALL BE PROVIDED BY THE BRIDGE CONTRACTOR AT NO EXTRA COST TO THE COUNTY OR STATE.

ABUTMENT PILES SHALL BE DRIVEN TO VALUES SHOWN IN DESIGN PLANS.

BARRIER RAIL NOT SHOWN IN DETAILS.

IF ROCK IS CLOSER THAN 15' BELOW ABUTMENT FOOTING, SPECIAL ANALYSIS MAY BE REQUIRED.

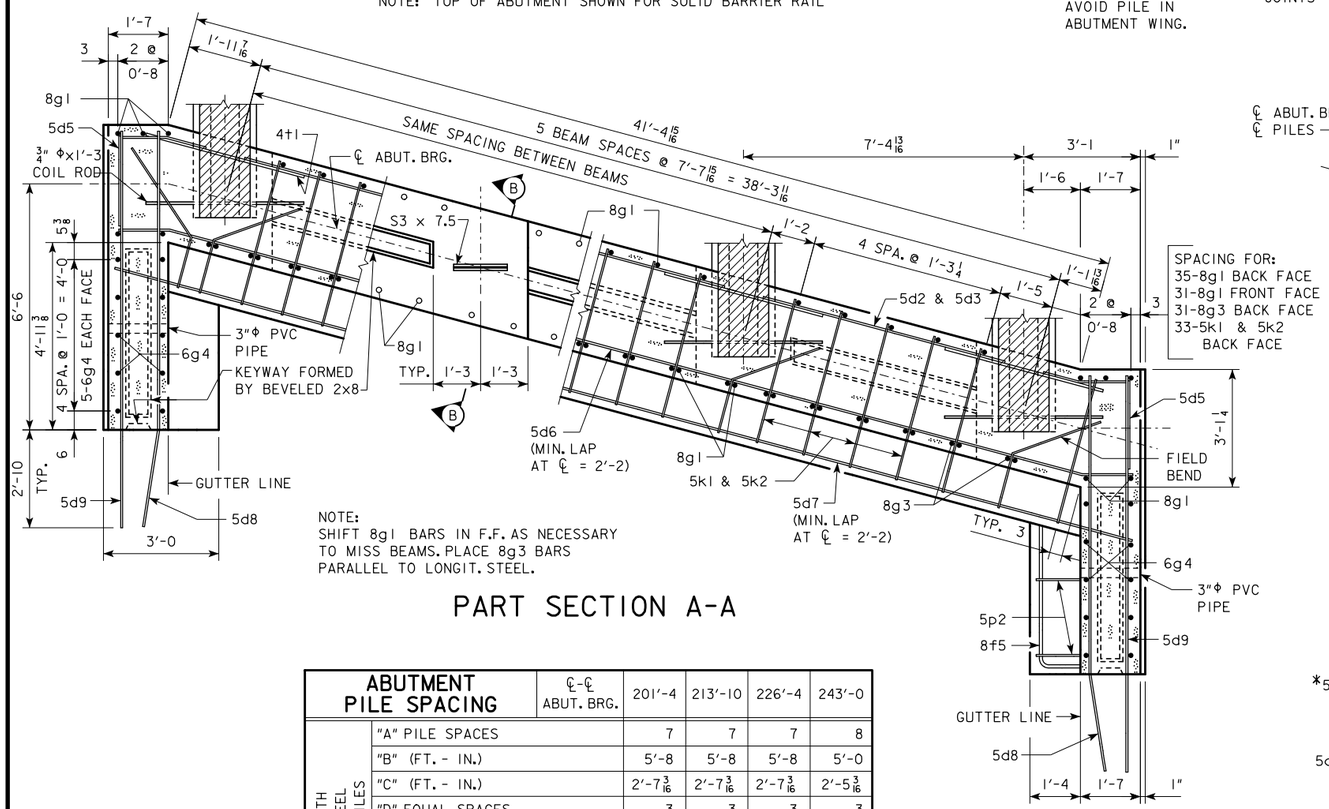

NOTE:
SHIFT 8g1 BARS IN F.F. AS NECESSARY TO MISS BEAMS. PLACE 8g3 BARS PARALLEL TO LONGIT. STEEL.

PART SECTION A-A

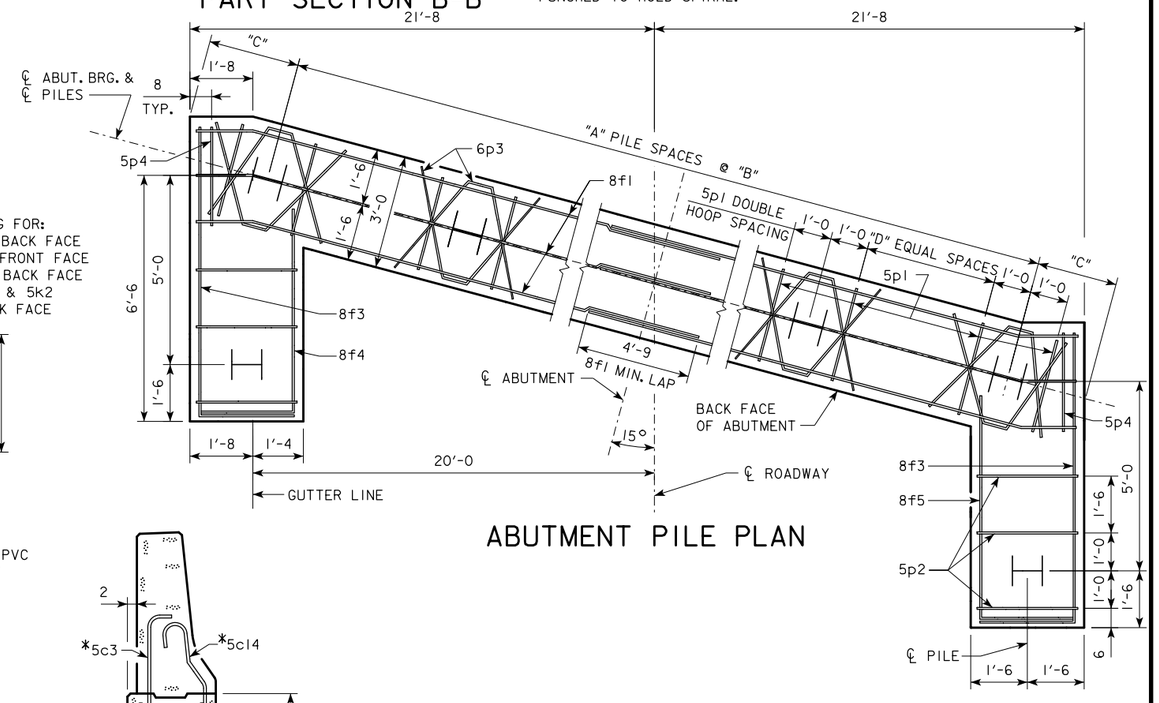

ABUTMENT PILE PLAN

ABUTMENT PILE SPACING	℄-℄ ABUT. BRG.	201'-4	213'-10	226'-4	243'-0
WITH STEEL H-PILES	"A" PILE SPACES	7	7	7	8
	"B" (FT. - IN.)	5'-8	5'-8	5'-8	5'-0
	"C" (FT. - IN.)	2'-7 3/16	2'-7 3/16	2'-7 3/16	2'-5 3/16
	"D" EQUAL SPACES	3	3	3	3
	NO. OF PILES PER ABUT.	10	10	10	11
	PU, STRENGTH I DESIGN LOAD (KIPS)	137	141	146	137

NOTE: Pu, STRENGTH I DESIGN LOAD (KIPS) IS NOT THE VALUE USED IN THE FIELD FOR DRIVING PILES.
NOTE: THE PILE TYPE AND NUMBER OF PILES ARE TO BE INCLUDED ON THE SUMMARY QUANTITIES SHEET IN THE PLAN.

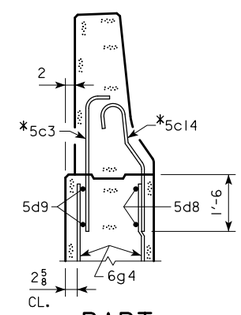

PART SECTION C-C

* NOTE: SEE BARRIER RAIL SHEET FOR DETAILS. REINFORCING BARS 5c3 AND 5c14 ARE INCLUDED IN BARRIER RAIL QUANTITIES.

LATEST REVISION DATE

APPROVED BY BRIDGE ENGINEER

IOWA DOT Highway Division

STANDARD DESIGN - 40' ROADWAY, THREE SPAN BRIDGE

PRETENSIONED PRESTRESSED CONCRETE BEAM BRIDGES

SEPTEMBER, 2014

ABUTMENT DETAILS

15° SKEW C BEAMS

H40-12-14

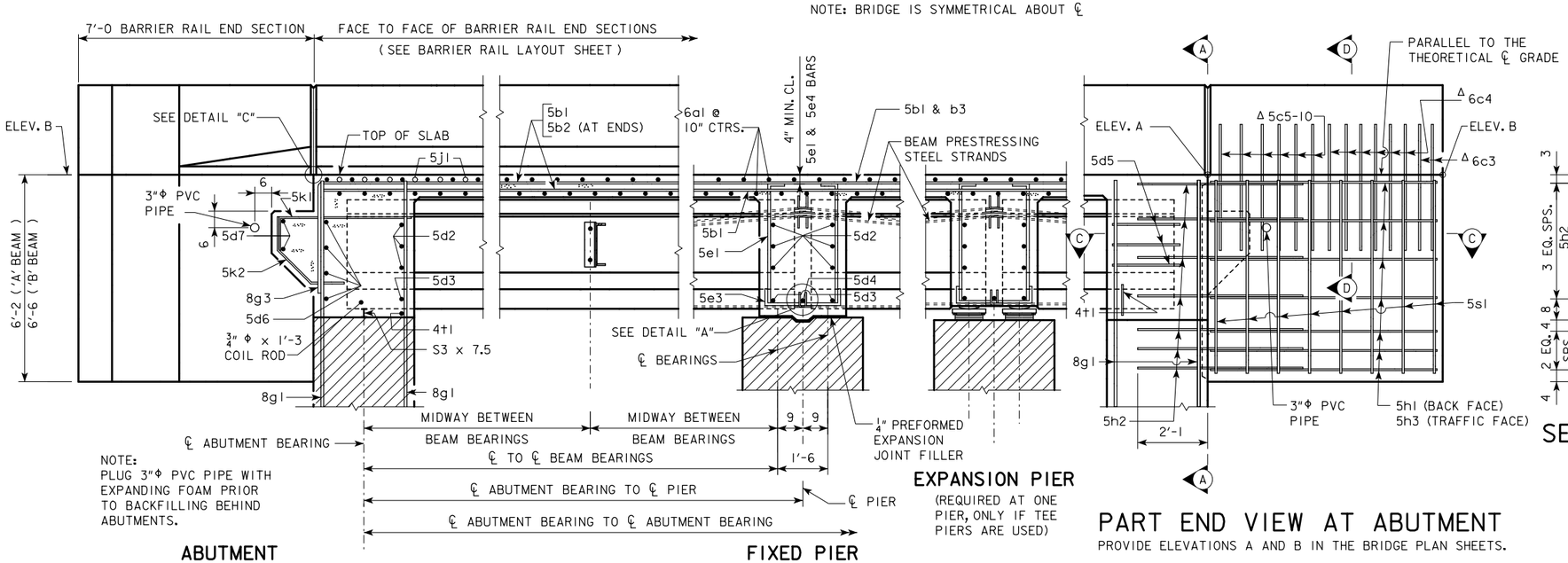

NOTE:
PLUG 3"Φ PVC PIPE WITH EXPANDING FOAM PRIOR TO BACKFILLING BEHIND ABUTMENTS.

PART LONGITUDINAL SECTION NEAR GUTTER

(FOR DETAILS OF INTERMEDIATE DIAPHRAGM SEE SHEET H40-38-14)

PART END VIEW AT ABUTMENT

PROVIDE ELEVATIONS A AND B IN THE BRIDGE PLAN SHEETS.

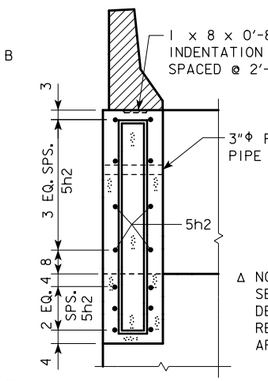

SECTION A-A

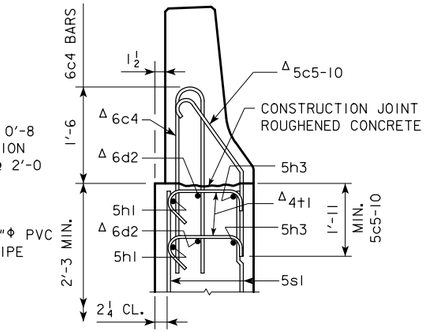

SECTION D-D

Δ NOTE:
SEE END SECTION DETAILS IN THESE PLANS FOR DETAILS OF BARRIER RAIL END SECTION. REINFORCING BARS 6c3, 6c4, 5c5-10, 6d2 & 4t1 ARE INCLUDED IN THE BARRIER RAIL QUANTITIES.

EXPANSION PIER

(REQUIRED AT ONE PIER, ONLY IF TEE PIERS ARE USED)

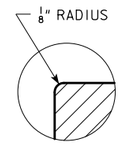

DETAIL "C"

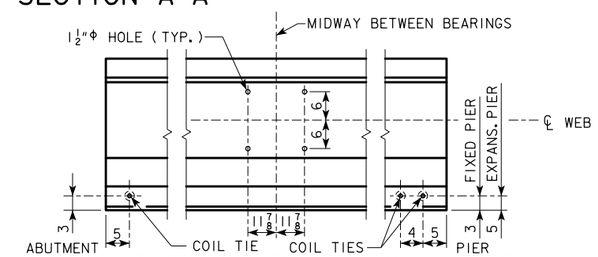

LOCATION OF BEAM COIL TIES AND STEEL DIAPHRAGM BOLT HOLES

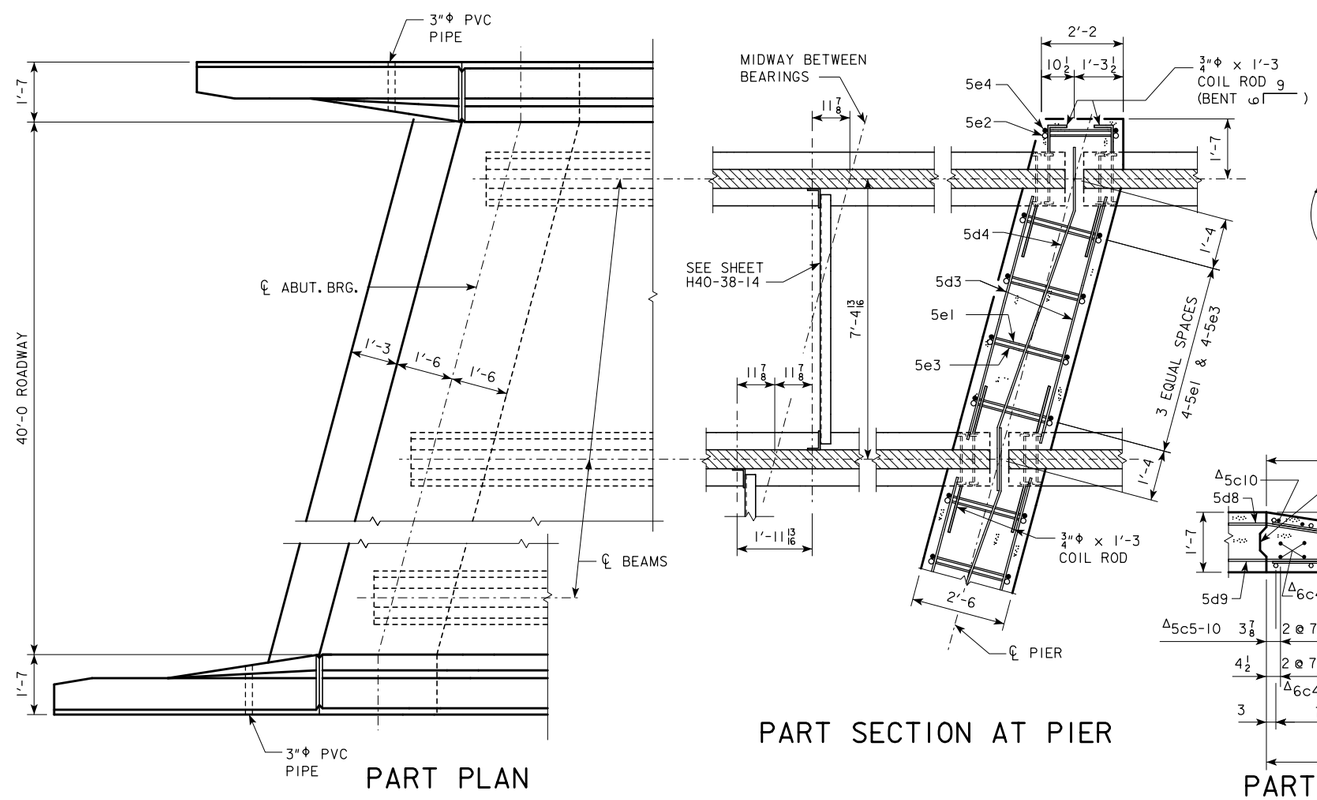

PART PLAN

PART SECTION AT PIER

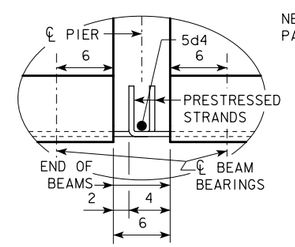

DETAIL "A"

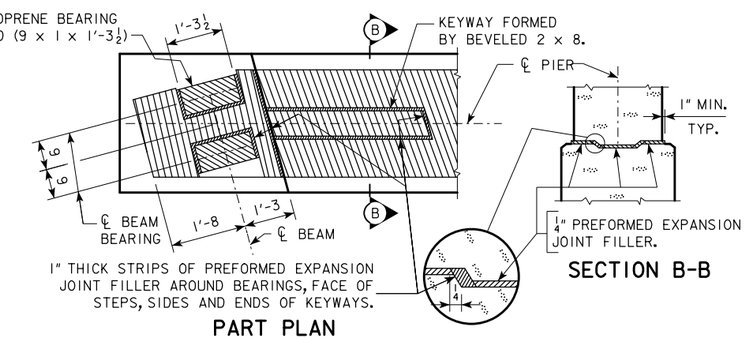

PART PLAN

SECTION B-B

TOP OF FIXED PIER DETAILS

(SEE SHEET H40-44-14 FOR EXPANSION PIER BEARING DETAILS)

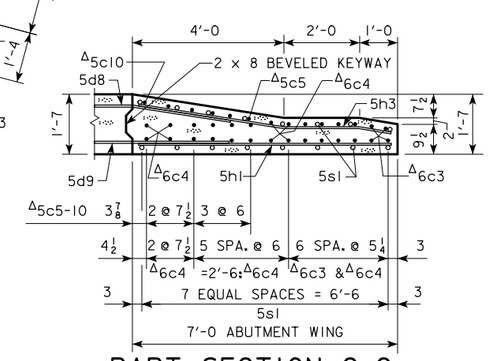

PART SECTION C-C

LATEST REVISION DATE

APPROVED BY BRIDGE ENGINEER

IOWA DOT Highway Division

STANDARD DESIGN - 40' ROADWAY, THREE SPAN BRIDGE

PRETENSIONED PRESTRESSED CONCRETE BEAM BRIDGES

SEPTEMBER, 2014

LONGITUDINAL SECTION

15° SKEW A & B BEAMS

H40-13-14

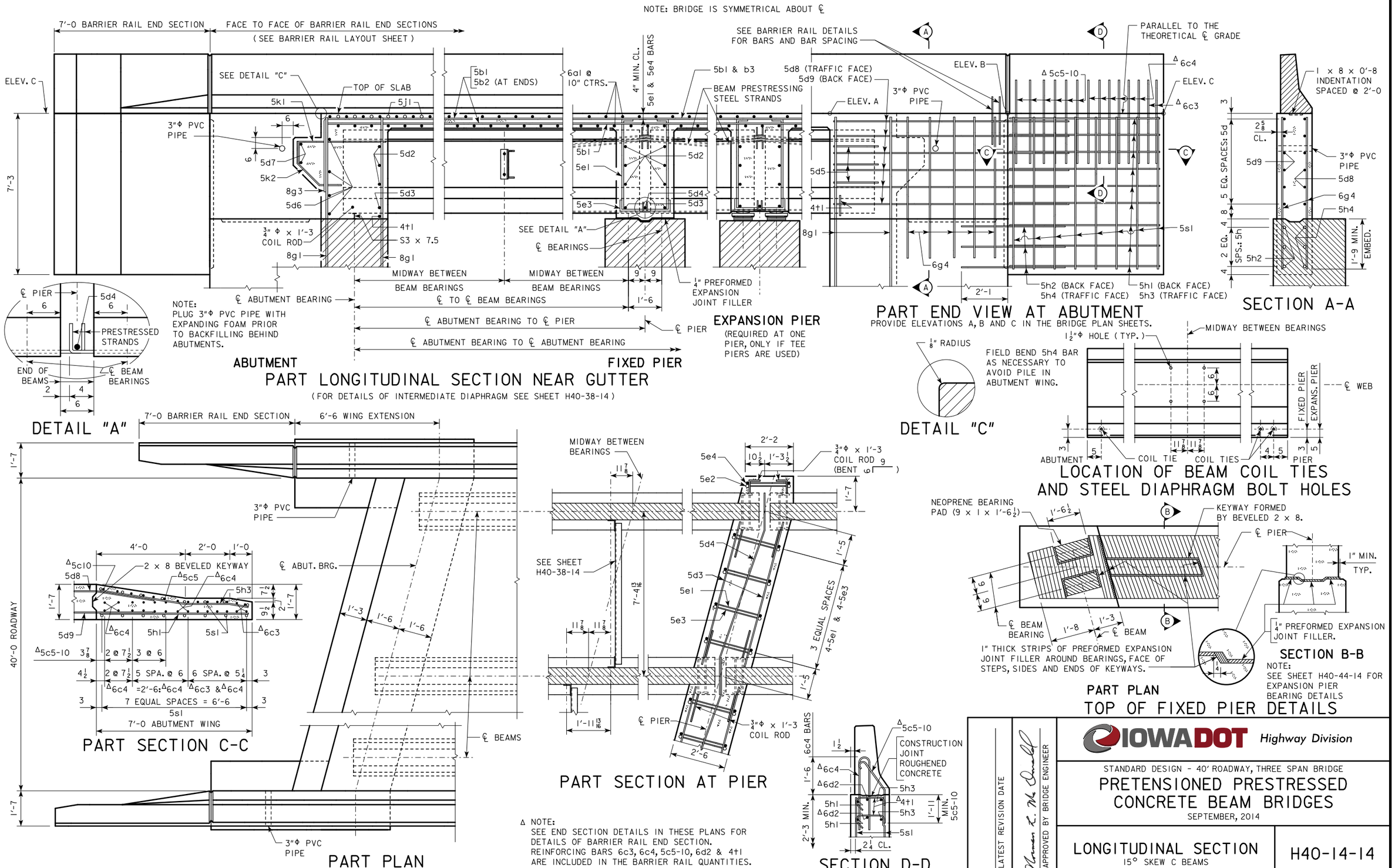

Δ NOTE:
SEE END SECTION DETAILS IN THESE PLANS FOR DETAILS OF BARRIER RAIL END SECTION. REINFORCING BARS 6c3, 6c4, 5c5-10, 6d2 & 4t1 ARE INCLUDED IN THE BARRIER RAIL QUANTITIES.

LATEST REVISION DATE

APPROVED BY BRIDGE ENGINEER

IOWA DOT Highway Division

STANDARD DESIGN - 40' ROADWAY, THREE SPAN BRIDGE

PRETENSIONED PRESTRESSED CONCRETE BEAM BRIDGES

SEPTEMBER, 2014

LONGITUDINAL SECTION

15° SKEW C BEAMS

H40-14-14

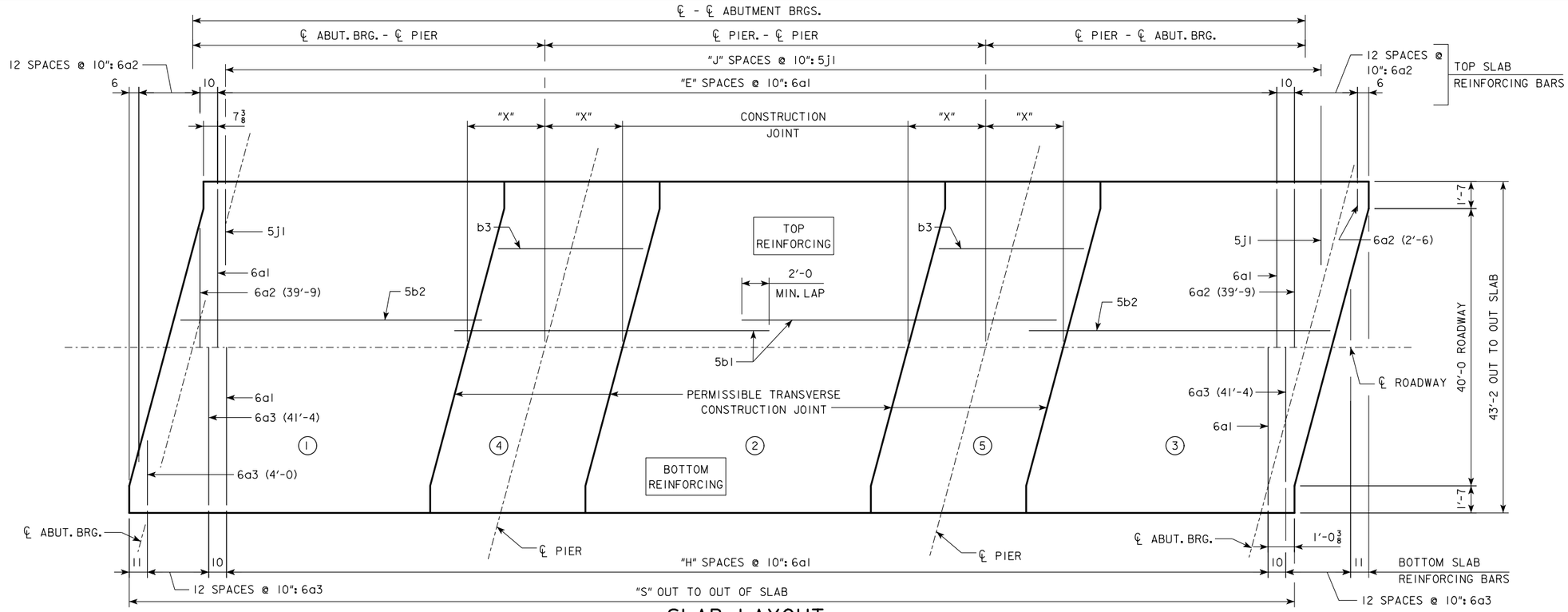

SLAB LAYOUT

(LEFT AHEAD SKEW SHOWN, RIGHT AHEAD SKEW SIMILAR)

ESTIMATED QUANTITIES

(SUPERSTRUCTURE PLUS INTEGRAL ABUTMENTS)

ESTIMATED QUANTITIES	℄-℄ ABUT. BRG.	138'-10	151'-4	163'-10	176'-4	188'-10	201'-4	213'-10	226'-4	243'-0
PRETENSIONED PRESTRESSED CONCRETE BEAM, CENTER SPAN	NO.	6-A50	6-A55	6-B59	6-B63	6-B67	6-C71	6-C75	6-C80	6-C80
PRETENSIONED PRESTRESSED CONCRETE BEAM, END SPAN	NO.	12-A42	12-A46	12-B50	12-B55	12-B59	12-C63	12-C67	12-C71	12-C80
CONCRETE RAIL (BARRIER OR OPEN)	L.F.	311.9	336.9	361.9	386.9	411.9	456.7	481.7	506.7	540.0
NO. OF WOOD PILES, TREATED FOR TWO ABUTMENTS	NO.	28	30	32	32	34	-----	-----	-----	-----
NO. OF STEEL H-PILES FOR TWO ABUTMENTS (HP 10 x 57)	NO.	14	14	14	14	16	20	20	20	22
PREBORED HOLES (w/ WOOD PILES)	L.F.	280	300	320	320	340	-----	-----	-----	-----
PREBORED HOLES (w/ STEEL H-PILES)	L.F.	140	140	140	140	160	200	200	200	220
WING ARMORING	S.Y.	3.5	3.5	3.5	3.5	3.5	5.7	5.7	5.7	5.7

NOTE:
FOR QUANTITIES OF STRUCTURAL CONCRETE, REINFORCING STEEL AND STRUCTURAL STEEL, REFER TO THE SUMMARY QUANTITIES SHEET IN THE BRIDGE PLANS.

Δ NOTE:
CONCRETE QUANTITIES SHALL BE LISTED ON THE SUMMARY QUANTITIES SHEET.

Δ CONCRETE PLACEMENT QUANT.

(SUPERSTRUCTURE PLUS INTEGRAL ABUTMENTS)

Δ CONCRETE PLACEMENT QUANT.		℄-℄ ABUT. BRG.	138'-10	151'-4	163'-10	176'-4	188'-10	201'-4	213'-10	226'-4	243'-0
SLAB INCLUDING HAUNCH, ABUT. DIAPHRAGM, & WINGWALLS** , SECTIONS 1 & 3	WITH BARRIER RAIL	C.Y.	119.6	127.6	141.2	149.2	157.2	174.8	183.2	191.8	210.8
	WITH OPEN RAIL	C.Y.	120.9	129.0	142.8	150.9	159.1	176.7	185.2	194.0	213.2
SLAB INCLUDING HAUNCH, SECTION 2	WITH BARRIER RAIL	C.Y.	43.5	47.0	50.5	54.0	57.3	61.1	64.6	68.1	68.1
	WITH OPEN RAIL	C.Y.	44.2	47.8	51.3	54.9	58.3	62.1	65.6	69.2	69.2
SLAB INCLUDING HAUNCH & PIER DIAPHRAGM, SECTIONS 4 & 5	WITH BARRIER RAIL	C.Y.	49.2	51.6	57.6	60.0	62.8	67.6	69.8	72.2	72.2
	WITH OPEN RAIL	C.Y.	49.7	52.1	58.2	60.6	63.4	68.2	70.5	72.9	72.9
ABUTMENT WINGS		C.Y.	7.2	7.2	7.6	7.6	7.6	8.4	8.4	8.4	8.4
ABUTMENT FOOTINGS (w/ WOOD PILES) ***		C.Y.	34.8	34.7	34.5	34.5	34.4	-----	-----	-----	-----
ABUTMENT FOOTINGS (w/ STEEL H PILES) ***		C.Y.	36.4	36.4	36.4	36.4	36.4	44.2	44.2	44.2	44.2

GENERAL DATA

GENERAL DATA		℄-℄ ABUT. BRG.	138'-10	151'-4	163'-10	176'-4	188'-10	201'-4	213'-10	226'-4	243'-0
VERTICAL CURVE	TOP OF SLAB TO ABUT. CONSTR. JT. AT C.L. ABUT. BRG.	"U"	3'-8	3'-7 13/16	4'-2 7/8	4'-2 13/16	4'-2 7/8	4'-8 9/16	4'-8 11/16	4'-9 1/8	4'-9 7/16
	TOP OF SLAB TO PIER TOP AT C.L. PIER*	"U"	3'-6 3/8	3'-6 9/16	4'-1 5/16	4'-1 1/2	4'-1 7/8	4'-7 5/16	4'-7 1/4	4'-7 1/2	4'-7 1/2
STRAIGHT GRADE	TOP OF SLAB TO ABUT. CONSTR. JT. AT C.L. ABUT. BRG.	"U"	3'-8 1/16	3'-7 7/8	4'-2 15/16	4'-2 15/16	4'-3	4'-8 3/4	4'-8 7/8	4'-9 5/16	4'-9 7/8
	TOP OF SLAB TO PIER TOP AT C.L. PIER*	"U"	3'-6 9/16	3'-6 3/4	4'-1 9/16	4'-1 13/16	4'-2 1/4	4'-7 11/16	4'-7 11/16	4'-8	4'-8
D.L. PIER REACTION (D.L. + F.W.S.) SERVICE LOADS		KIPS	438.8	473.4	540.5	577.1	613.9	733.7	774.7	816.2	856.5
L.L. PIER REACTION (HL93) NO IMPACT SERVICE LOADS		KIPS	264.7	274.5	283.9	293.1	302.2	311.0	322.9	341.9	362.6
NO. OF SPACES FOR 6a1 BARS (TOP)		"E"	156	171	186	201	216	231	246	261	281
NO. OF SPACES FOR 6a1 BARS (BOTTOM)		"H"	155	170	185	200	215	230	245	260	280
NO. OF SPACES FOR 5j1 BARS (TOP)		"J"	167	182	197	212	227	242	257	272	292
OUT TO OUT OF SLAB		"S"	141'-11 1/4	154'-5 1/4	166'-11 1/4	179'-5 1/4	191'-11 1/4	204'-5 1/4	216'-11 1/4	229'-5 1/4	246'-1 1/4
SLAB TRANSVERSE CONSTR. JT. DISTANCE FROM C.L. PIER		"X"	6'-7	7'-1	7'-7	8'-1	8'-8	9'-2	9'-8	10'-2	10'-2

NOTE: CONCRETE DECK SHALL BE PLACED IN SECTIONS AND SEQUENCES INDICATED. ALTERNATE PROCEDURES FOR PLACING DECK CONCRETE MAY BE SUBMITTED FOR APPROVAL TOGETHER WITH A STATEMENT OF THE PROPOSED METHOD AND EVIDENCE THAT THE CONTRACTOR POSSESSES THE NECESSARY EQUIPMENT AND FACILITIES TO ACCOMPLISH THE REQUIRED RESULTS. FOR APPROVED ALTERNATE PROCEDURES THE ENGINEER SHALL DETERMINE IF A RETARDING ADMIXTURE IS REQUIRED TO MAINTAIN PLASTICITY OF THE CONCRETE DECK DURING PLACEMENT.

* VALUES SHOWN ARE FOR FIXED PIERS ONLY AND ALLOW FOR 1/16 INCH DEFLECTION OF THE 1 INCH NEOPRENE BEARING PAD. AT EXPANSION PIER LOCATIONS ADD 3/16 INCHES TO "U" VALUES SHOWN.

** WINGWALLS APPLY ONLY TO BRIDGES USING "C" BEAMS.

07-15
LATEST REVISION DATE

APPROVED BY BRIDGE ENGINEER

IOWA DOT Highway Division

STANDARD DESIGN - 40' ROADWAY, THREE SPAN BRIDGE

PRETENSIONED PRESTRESSED CONCRETE BEAM BRIDGES

SEPTEMBER, 2014

SUPERSTRUCTURE DETAILS

15° SKEW

H40-15-14

REVISED 07-2015 - CHANGED CONCRETE PLACEMENT NOTE TO ACCOUNT FOR THE POSSIBLE ADDITION OF A RETARDING ADMIXTURE TO THE CONCRETE.

REINFORCING BAR LIST

ONE SUPERSTRUCTURE AND TWO ABUTMENTS

EPOXY COATED REINFORCING

		℄-℄ ABUT. BRG.	138'-10			151'-4			163'-10			176'-4			188'-10			201'-4			213'-10			226'-4			243'-0		
		℄-℄ BEAM BRG.	42'-6	50'-10	42'-6	46'-8	55'-0	46'-8	50'-10	59'-2	50'-10	55'-0	63'-4	55'-0	59'-2	67'-6	59'-2	63'-4	71'-8	63'-4	67'-6	75'-10	67'-6	71'-8	80'-0	71'-8	80'-0	80'-0	80'-0
		BEAM SERIES	A BEAM			A BEAM			B BEAM			B BEAM			B BEAM			C BEAM			C BEAM			C BEAM			C BEAM		
BAR	LOCATION	SHAPE	NO.	LENGTH	WEIGHT	NO.	LENGTH	WEIGHT	NO.	LENGTH	WEIGHT	NO.	LENGTH	WEIGHT	NO.	LENGTH	WEIGHT	NO.	LENGTH	WEIGHT	NO.	LENGTH	WEIGHT	NO.	LENGTH	WEIGHT	NO.	LENGTH	WEIGHT
6a1	SLAB TRANSV. TOP & BOTT.		313	42'-10	20,137	343	42'-10	22,067	373	42'-10	23,997	403	42'-10	25,927	433	42'-10	27,857	463	42'-10	29,787	493	42'-10	31,717	523	42'-10	33,648	563	42'-10	36,221
6a2	SLAB TRANSV. TOP ENDS		26	VARIES	825	26	VARIES	825	26	VARIES	825	26	VARIES	825	26	VARIES	825	26	VARIES	825	26	VARIES	825	26	VARIES	825	26	VARIES	825
6a3	SLAB TRANSV. BOTT. ENDS		26	VARIES	885	26	VARIES	885	26	VARIES	885	26	VARIES	885	26	VARIES	885	26	VARIES	885	26	VARIES	885	26	VARIES	885	26	VARIES	885
5b1	SLAB LONGITUDINAL, TOP & BOTT.		202	40'-0	8,427	303	40'-0	12,641	303	40'-0	12,641	303	40'-0	12,641	303	40'-0	12,641	404	40'-0	16,855	404	40'-0	16,855	404	40'-0	16,855	505	40'-0	21,069
5b2	SLAB LONGITUDINAL, TOP & BOTT., ENDS		202	33'-10	7,128	202	21'-1	4,442	202	27'-4	5,759	202	33'-7	7,076	202	39'-10	8,392	202	27'-1	5,706	202	33'-4	7,023	202	39'-7	8,340	202	28'-11	6,092
6b3	SLAB LONGITUDINAL, TOP @ PIERS		92	12'-10	1,773	92	13'-10	1,912	92	14'-10	2,050	—	—	—	—	—	—	—	—	—	—	—	—	—	—	—	—	—	—
7b3	SLAB LONGITUDINAL, TOP @ PIERS		—	—	—	—	—	—	—	—	—	92	15'-10	2,977	92	17'-0	3,197	92	18'-0	3,385	—	—	—	—	—	—	—	—	—
8b3	SLAB LONGITUDINAL, TOP @ PIERS		—	—	—	—	—	—	—	—	—	—	—	—	—	—	—	—	—	—	92	19'-0	4,667	92	20'-0	4,913	92	20'-0	4,913
5d1	PIER DIAPH. ENDS		12	3'-8	46	12	3'-8	46	12	3'-8	46	12	3'-8	46	12	3'-8	46	12	3'-8	46	12	3'-8	46	12	3'-8	46	12	3'-8	46
5d2	PIER & ABUT. DIAPH. LONGIT.		90	6'-11	649	90	6'-11	649	90	6'-11	649	90	6'-11	649	90	6'-11	649	90	6'-8	626	90	6'-8	626	90	6'-8	626	90	6'-8	626
5d3	PIER & ABUT. DIAPH. LONGIT.		30	6'-0	188	30	6'-0	188	30	6'-0	188	30	6'-0	188	30	6'-0	188	30	5'-9	180	30	5'-9	180	30	5'-9	180	30	5'-9	180
5d4	PIER DIAPH. LONGIT.		10	9'-6	99	10	9'-6	99	10	9'-6	99	10	9'-6	99	10	9'-6	99	10	9'-6	99	10	9'-6	99	10	9'-6	99	10	9'-6	99
5d5	ABUT. DIAPH. ENDS		12	5'-0	63	12	5'-0	63	12	5'-0	63	12	5'-0	63	12	5'-0	63	12	5'-0	63	12	5'-0	63	12	5'-0	63	12	5'-0	63
5d6	ABUT. DIAPH. LONGIT. B.F.		16	23'-3	388	16	23'-3	388	16	23'-3	388	16	23'-3	388	16	23'-3	388	16	23'-3	388	16	23'-3	388	16	23'-3	388	16	23'-3	388
5d7	PAVING NOTCH LONGIT.		8	22'-11	191	8	22'-11	191	8	22'-11	191	8	22'-11	191	8	22'-11	191	8	22'-11	191	8	22'-11	191	8	22'-11	191	8	22'-11	191
5d8	ABUT. DIAPH. WING EXT. LONGIT.		—	—	—	—	—	—	—	—	—	—	—	—	—	—	—	24	10'-10	271	24	10'-10	271	24	10'-10	271	24	10'-10	271
5d9	ABUT. DIAPH. WING EXT. LONGIT.		—	—	—	—	—	—	—	—	—	—	—	—	—	—	—	24	10'-9	269	24	10'-9	269	24	10'-9	269	24	10'-9	269
5e1	PIER DIAPH. HOOPS		40	8'-11	372	40	8'-11	372	40	10'-2	424	40	10'-2	424	40	10'-2	424	40	11'-2	466	40	11'-2	466	40	11'-2	466	40	11'-2	466
5e2	PIER DIAPH. TIES ENDS		4	2'-11	12	4	2'-11	12	4	2'-11	12	4	2'-11	12	4	2'-11	12	4	2'-11	12	4	2'-11	12	4	2'-11	12	4	2'-11	12
5e3	PIER DIAPH. TIES		40	3'-3	136	40	3'-3	136	40	3'-3	136	40	3'-3	136	40	3'-3	136	40	3'-3	136	40	3'-3	136	40	3'-3	136	40	3'-3	136
5e4	PIER DIAPH. HOOPS ENDS		4	8'-7	36	4	8'-7	36	4	9'-10	41	4	9'-10	41	4	9'-10	41	4	10'-10	45	4	10'-10	45	4	10'-10	45	4	10'-10	45
8f1	ABUT. FOOTING LONGIT.		36	24'-6	2,355	36	24'-6	2,355	36	24'-6	2,355	36	24'-6	2,355	36	24'-6	2,355	36	24'-7	2,363	36	24'-7	2,363	36	24'-7	2,363	36	24'-7	2,363
8f3	ABUT. EXTENSION LONGIT.		—	—	—	—	—	—	—	—	—	—	—	—	—	—	—	16	10'-2	434	16	10'-2	434	16	10'-2	434	16	10'-2	434
8f4	ABUT. EXTENSION LONGIT.		—	—	—	—	—	—	—	—	—	—	—	—	—	—	—	8	8'-2	174	8	8'-2	174	8	8'-2	174	8	8'-2	174
8f5	ABUT. EXTENSION LONGIT.		—	—	—	—	—	—	—	—	—	—	—	—	—	—	—	8	8'-9	187	8	8'-9	187	8	8'-9	187	8	8'-9	187
8g1	ABUT. VERT.		136	6'-8	2,421	136	6'-8	2,421	136	7'-3	2,633	136	7'-3	2,633	136	7'-3	2,633	132	7'-9	2,731	132	7'-9	2,731	132	7'-9	2,731	132	7'-10	2,761
8g3	ABUT. DIAPH. VERT. B.F.		62	15'-3	2,524	62	15'-3	2,524	62	15'-3	2,524	62	15'-3	2,524	62	15'-3	2,524	62	15'-9	2,607	62	15'-9	2,607	62	15'-9	2,607	62	15'-9	2,607
6g4	ABUT. DIAPH. WING EXT. VERT.		—	—	—	—	—	—	—	—	—	—	—	—	—	—	—	40	6'-6	391	40	6'-6	391	40	6'-7	396	40	6'-7	396
5h1	ABUT. WING HORIZ. B.F.		28	6'-8	195	28	6'-8	195	28	6'-8	195	28	6'-8	195	28	6'-8	195	36	6'-8	250	36	6'-8	250	36	6'-8	250	36	6'-8	250
5h2	ABUT. TO WING ANCHOR		56	4'-11	287	56	4'-11	287	56	4'-11	287	56	4'-11	287	56	4'-11	287	12	4'-11	62	12	4'-11	62	12	4'-11	62	12	4'-11	62
5h3	ABUT. WING HORIZ. TRAFFIC FACE		28	6'-9	197	28	6'-9	197	28	6'-9	197	28	6'-9	197	28	6'-9	197	36	6'-9	253	36	6'-9	253	36	6'-9	253	36	6'-9	253
5h4	ABUT. TO WING ANCHOR		—	—	—	—	—	—	—	—	—	—	—	—	—	—	—	12	4'-11	62	12	4'-11	62	12	4'-11	62	12	4'-11	62
5j1	TOP OF SLAB TRANSV. (AT RAIL)		336	6'-3	2,190	366	6'-3	2,386	396	6'-3	2,581	426	6'-3	2,777	456	6'-3	2,973	486	6'-3	3,168	516	6'-3	3,364	546	6'-3	3,559	586	6'-3	3,820
5k1	PAVING NOTCH		66	4'-9	327	66	4'-9	327	66	4'-9	327	66	4'-9	327	66	4'-9	327	66	4'-9	327	66	4'-9	327	66	4'-9	327	66	4'-9	327
5k2	PAVING NOTCH		66	3'-5	235	66	3'-5	235	66	3'-5	235	66	3'-5	235	66	3'-5	235	66	3'-5	235	66	3'-5	235	66	3'-5	235	66	3'-5	235
5p1	ABUTMENT HOOPS (WOOD/STEEL)		104/120	10'-6	1139/1314	112/120	10'-6	1227/1314	120/120	10'-6	1314/1314	120/120	10'-6	1314/1314	128/112	10'-6	1402/1227	120	10'-6	1,314	120	10'-6	1,314	120	10'-6	1,314	136	10'-6	1,489
5p2	ABUTMENT HOOPS		8	10'-8	89	8	10'-8	89	8	10'-8	89	8	10'-8	89	8	10'-8	89	24	10'-8	267	24	10'-8	267	24	10'-8	267	24	10'-8	267
6p3	ABUT. BOTT. AT PILES		—	—	—	—	—	—	—	—	—	—	—	—	—	—	—	32	6'-8	320	32	6'-8	320	32	6'-8	320	36	6'-8	360
5p4	ABUT. HOOPS AT ENDS		—	—	—	—	—	—	—	—	—	—	—	—	—	—	—	8	10'-8	89	8	10'-8	89	8	10'-8	89	8	10'-8	89
5s1	WING VERT.		64	5'-10	389	64	5'-10	389	64	6'-2	412	64	6'-2	412	64	6'-2	412	64	6'-11	462	64	6'-11	462	64	6'-11	462	64	6'-11	462
4t1	UNDER BEAMS AT ABUTMENTS		12	4'-7	37	12	4'-7	37	12	4'-7	37	12	4'-7	37	12	4'-7	37	12	4'-10	39	12	4'-10	39	12	4'-10	39	12	4'-10	39
#2	PILE SPIRAL (WOOD/STEEL)*		28/14	38'-6	180/90	30/14	38'-6	193/90	32/14	38'-6	206/90	32/14	38'-6	206/90	34/16	38'-6	219/103	20	38'-6	129	20	38'-6	129	20	38'-6	129	22	38'-6	141
	SPIRAL SPACERS, L $\frac{7}{8}\times\frac{7}{8}\times\frac{1}{8}\times$ 0.70 (WOOD/STL.)*		84/42	1'-10	108/54	90/42	1'-10	116/54	96/42	1'-10	123/54	96/42	1'-10	123/54	102/48	1'-10	131/62	60	1'-10	77	60	1'-10	77	60	1'-10	77	66	1'-10	85
	*EPOXY COATING NOT REQUIRED																												
	SUB TOTAL W/ WOOD PILES**				54,028			57,930			61,909			66,279			70,050			—			—			—			—
	SUB TOTAL W/ STEEL H-PILES**				54,059			57,852			61,724			66,094			69,690			76,176			80,901			84,595			89,660
	**RAIL REINFORCING NOT INCLUDED																												

NOTE: REINFORCING STEEL QUANTITIES ARE TO BE INCLUDED ON THE SUMMARY QUANTITIES SHEET IN THE PLAN.

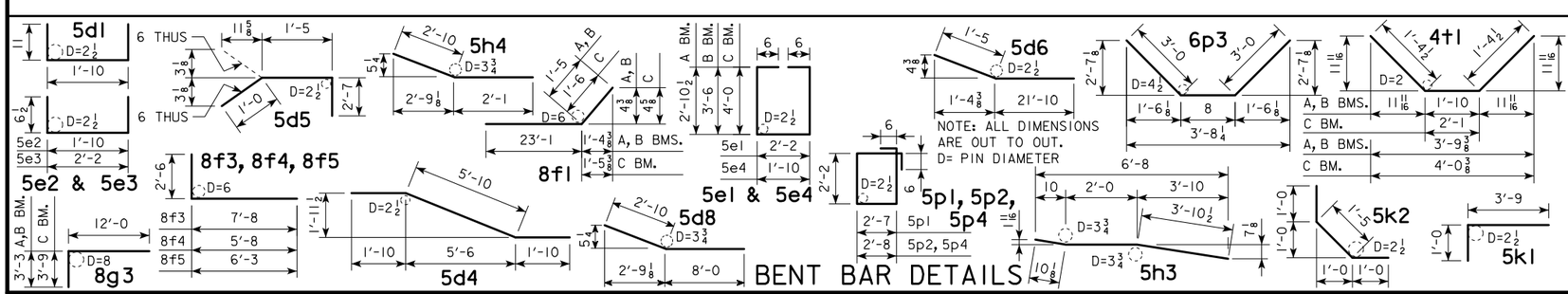

LATEST REVISION DATE

APPROVED BY BRIDGE ENGINEER

IOWA DOT Highway Division

STANDARD DESIGN - 40' ROADWAY, THREE SPAN BRIDGE

PRETENSIONED PRESTRESSED CONCRETE BEAM BRIDGES

SEPTEMBER, 2014

DECK & ABUTMENT REINF.

15° SKEW

H40-16-14

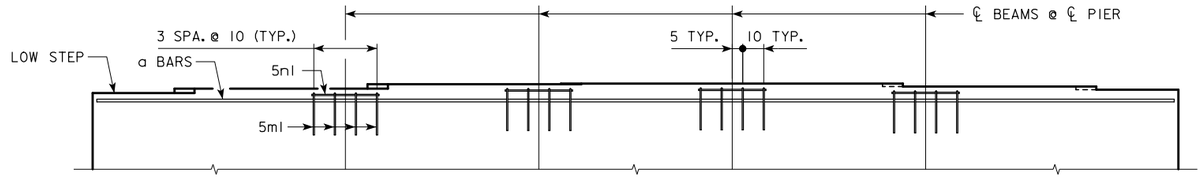

PART ELEVATION VIEW OF PIER CAP

GRADE (G): G <= 1.4%

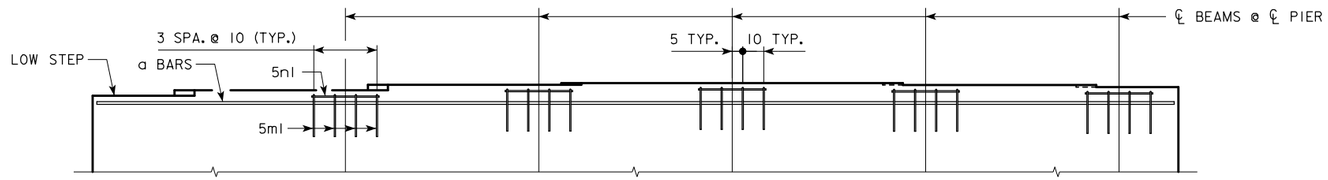

PART ELEVATION VIEW OF PIER CAP

GRADE (G): 1.4% < G <= 3.4%

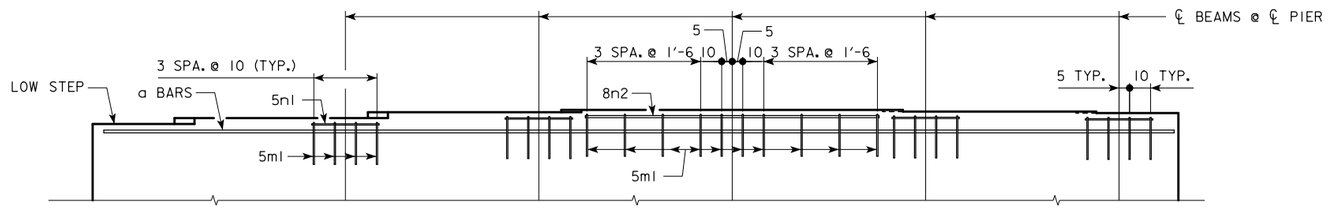

PART ELEVATION VIEW OF PIER CAP

GRADE (G): 3.4% < G <= 4.4%

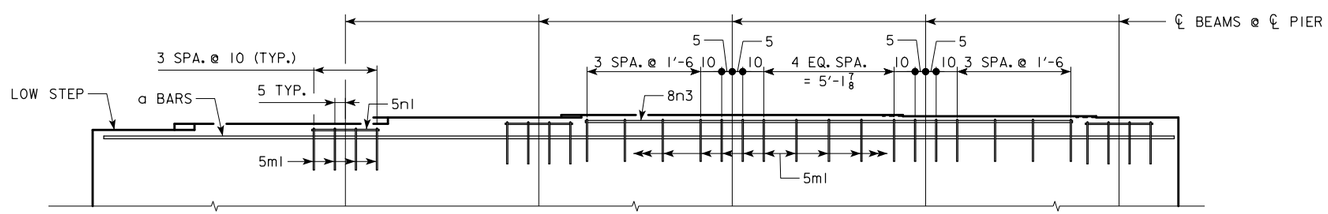

PART ELEVATION VIEW OF PIER CAP

GRADE (G): 4.4% < G <= 5.0%

STEP REINFORCING BAR LIST ONE TEE PIER

			G <= 1.4%			1.4% < G <= 3.4%			3.4% < G <= 4.4%			4.4% < G <= 5.0%		
BAR	LENGTH	SHAPE	NO.	SIZE	WEIGHT	NO.	SIZE	WEIGHT	NO.	SIZE	WEIGHT	NO.	SIZE	WEIGHT
5m1	6'-4		16	5	106	20	5	132	26	5	172	29	5	192
5n1	2'-8		16	5	45	20	5	56	16	5	45	12	5	33
8n2	12'-4		--	--	--	--	--	--	4	8	132	--	--	--
8n3	20'-0		--	--	--	--	--	--	--	--	--	4	8	214
TOTAL (LB.)					151			188			349			439

G = GRADE (%)

STEP REINFORCING BAR LIST ONE PILE BENT PIER

			G <= 1.4%			1.4% < G <= 3.4%			3.4% < G <= 4.4%			4.4% < G <= 5.0%		
BAR	LENGTH	SHAPE	NO.	SIZE	WEIGHT	NO.	SIZE	WEIGHT	NO.	SIZE	WEIGHT	NO.	SIZE	WEIGHT
5m1	6'-3		16	5	104	20	5	130	26	5	169	29	5	189
5n1	2'-8		16	5	45	20	5	56	16	5	45	12	5	33
8n2	12'-4		--	--	--	--	--	--	4	8	132	--	--	--
8n3	20'-0		--	--	--	--	--	--	--	--	--	4	8	214
TOTAL (LB.)					149			186			346			436

G = GRADE (%)

NOTE: THE REINFORCING STEEL QUANTITIES ARE TO BE INCLUDED ON THE SUMMARY QUANTITIES SHEET IN THE PLAN.

NOTE: THE CONCRETE QUANTITIES ARE TO BE INCLUDED ON THE SUMMARY QUANTITIES SHEET IN THE PLAN.

BENT BAR DETAILS

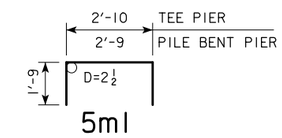

NOTE: ALL DIMENSIONS ARE OUT TO OUT.
D = PIN DIAMETER.

NOTES:

THE TABLE BELOW LISTS THE ADDITIONAL CONCRETE VOLUME REQUIRED IN EACH ABUTMENT FOOTING/PIER CAP BASED ON THE ROADWAY GRADE AT EACH ABUTMENT FOOTING/PIER CAP. ADDITIONAL CONCRETE SHOULD BE ADDED TO THE PLANS FOR EACH ABUTMENT FOOTING/PIER CAP THAT HAS 0.5 CU. YDS. OR MORE OF ADDITIONAL CONCRETE. VALUES SHOULD BE EXCLUDED FOR SCENARIOS THAT HAVE LESS THAN 0.5 CU. YDS. OF ADDITIONAL CONCRETE PER SUBSTRUCTURE UNIT. VALUES MAY BE INTERPOLATED FOR GRADES BETWEEN THE VALUES SHOWN IN THE TABLE.

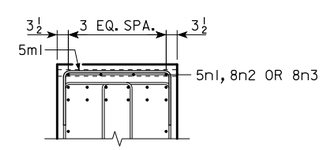

TYPICAL SECTION

ADDITIONAL CONCRETE VOLUME PER SUBSTRUCTURE UNIT (C.Y.)

	ROADWAY GRADE AT SUBSTRUCTURE UNIT				
	1%	2%	3%	4%	5%
EACH ABUTMENT FOOTING					
A, B BEAMS	-----	-----	0.7	0.9	1.1
C BEAMS	-----	0.5	0.8	1.1	1.4
EACH TEE PIER CAP - ALL BEAMS	--	--	0.7	0.9	1.2
EACH PILE BENT PIER - ALL BEAMS	--	--	0.7	0.9	1.2

LATEST REVISION DATE

APPROVED BY BRIDGE ENGINEER

IOWA DOT Highway Division

STANDARD DESIGN - 40' ROADWAY, THREE SPAN BRIDGE

PRETENSIONED PRESTRESSED CONCRETE BEAM BRIDGES

SEPTEMBER, 2014

ADDITIONAL QUANTITIES

15° SKEW

H40-17-14

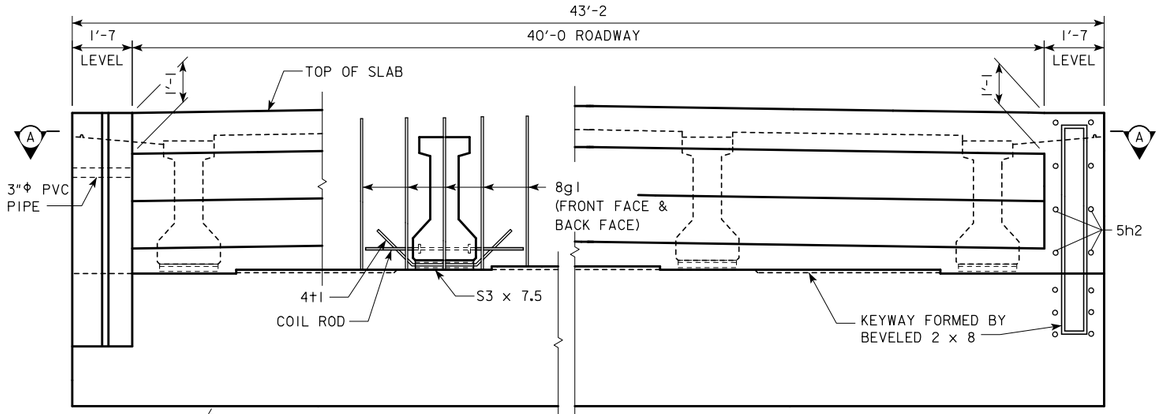

PART REAR ELEVATION AT ABUTMENT

NOTE: TOP OF ABUTMENT SHOWN FOR SOLID BARRIER RAIL

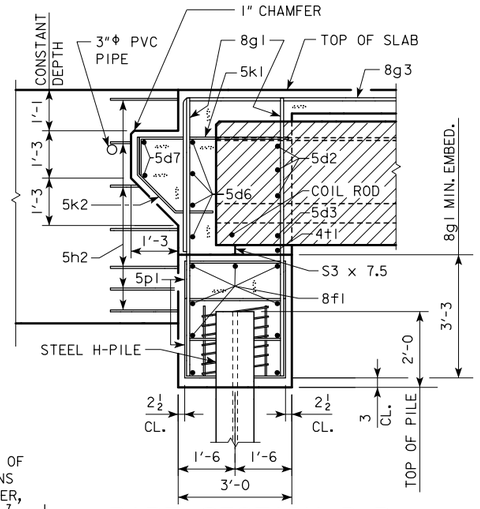

PART SECTION B-B

(FOR STEEL H-PILING)

NOTE:
THE SPIRAL AT THE TOP OF EACH PILE TO BE 7 TURNS OF NO. 2 BAR, 21" DIAMETER, 3" PITCH WITH 3 - $L\frac{7}{8} \times \frac{7}{8} \times \frac{1}{8}$ SPACERS PUNCHED TO HOLD SPIRAL.

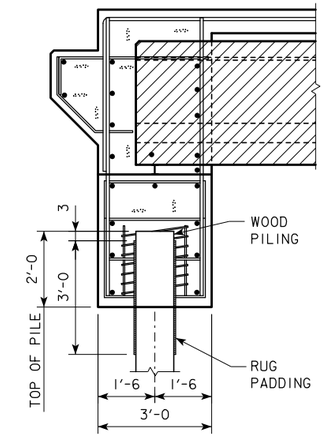

PART SECTION B-B

(FOR WOOD PILING)

WOOD PILING NOTE:

AFTER PILES ARE CUT OFF, THE UPPER 3', EXCEPT AS SHOWN, IS TO BE WRAPPED WITH A DOUBLE THICKNESS OF RUG PADDING HELD IN PLACE BY TACKING WITH GALVANIZED ROOFING NAILS AND WRAPPED WITH #14 GAUGE GALVANIZED WIRE AT A 4" PITCH, CARE IS TO BE TAKEN NOT TO DAMAGE PADDING WHEN PLACING CONCRETE. RUG PADDING MAY BE EITHER OF THE FOLLOWING:
(1) HAIR AND JUTE RUG PADDING, RUBBERIZED ON BOTH SIDES, AND WEIGHING NOT LESS THAN 47 OZ. PER SQ. YD.
(2) BONDED URETHANE OR BONDED POLYFOAM WITH A MINIMUM DENSITY OF 5 LBS. PER CU. FT. AND SHALL BE AT LEAST ½ IN. THICK, (MATERIAL LESS THAN ½ IN. IN THICKNESS MAY BE USED, BUT WILL REQUIRE ADDITIONAL WRAPS FOR A TOTAL OF AT LEAST ONE INCH).

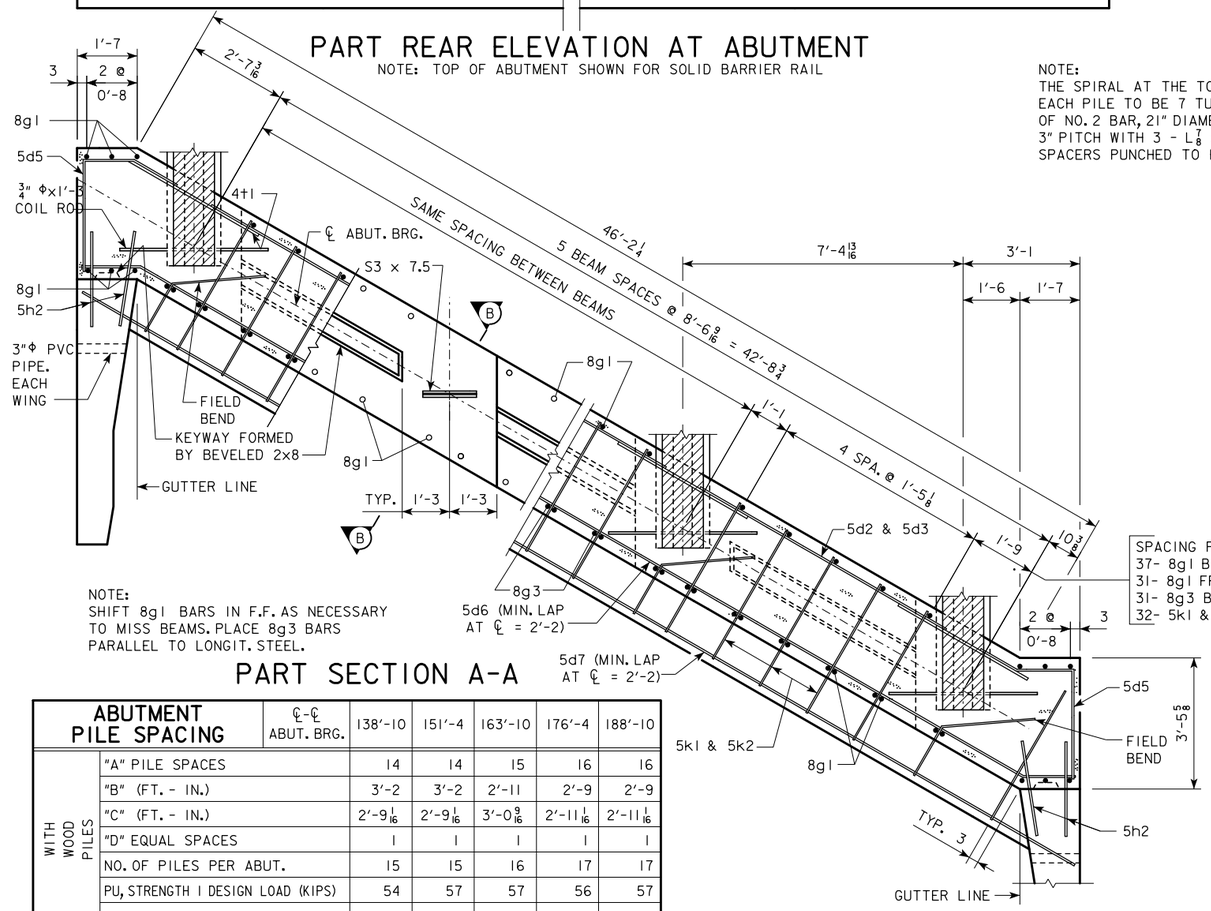

SPACING FOR:
37- 8g1 BACK FACE
31- 8g1 FRONT FACE
31- 8g3 BACK FACE
32- 5k1 & 5k2 BACK FACE

NOTE:
SHIFT 8g1 BARS IN F.F. AS NECESSARY TO MISS BEAMS. PLACE 8g3 BARS PARALLEL TO LONGIT. STEEL.

PART SECTION A-A

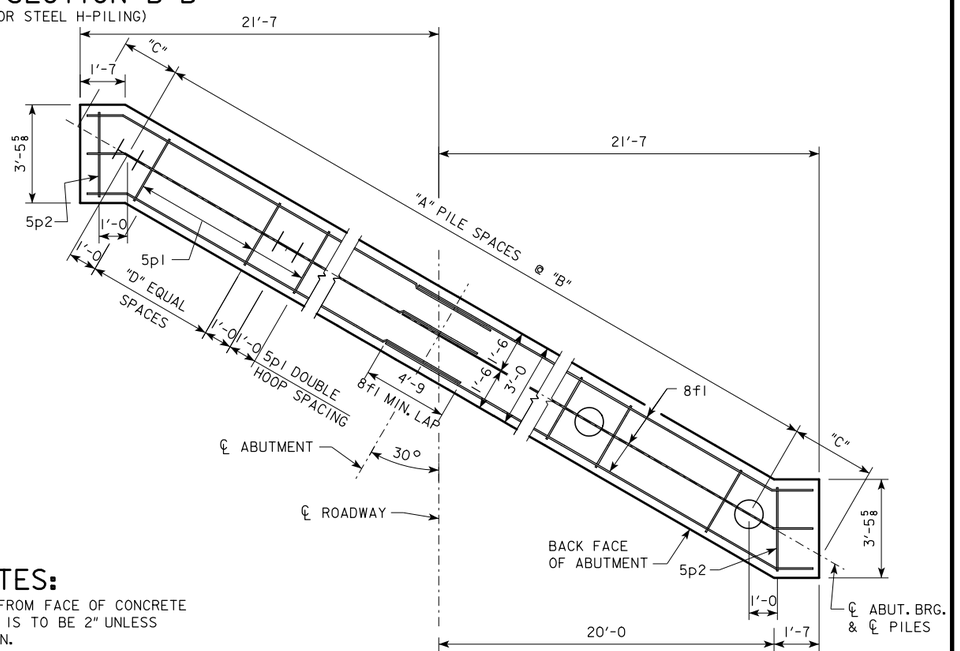

ABUTMENT PILE PLAN

ABUTMENT PILE SPACING	℄-℄ ABUT. BRG.	138'-10	151'-4	163'-10	176'-4	188'-10
WITH WOOD PILES	"A" PILE SPACES	14	14	15	16	16
	"B" (FT. - IN.)	3'-2	3'-2	2'-11	2'-9	2'-9
	"C" (FT. - IN.)	2'-9 1/16	2'-9 1/16	3'-0 9/16	2'-11 1/16	2'-11 1/16
	"D" EQUAL SPACES	1	1	1	1	1
	NO. OF PILES PER ABUT.	15	15	16	17	17
	PU, STRENGTH I DESIGN LOAD (KIPS)	54	57	57	56	57
WITH STEEL H-PILES	"A" PILE SPACES	6	6	6	6	7
	"B" (FT. - IN.)	7'-5	7'-5	7'-5	7'-5	6'-4
	"C" (FT. - IN.)	2'-8 1/16	2'-8 1/16	2'-8 1/16	2'-8 1/16	2'-9 1/16
	"D" EQUAL SPACES	5	5	5	5	4
	NO. OF PILES PER ABUT.	7	7	7	7	8
	PU, STRENGTH I DESIGN LOAD (KIPS)	127	132	141	146	132

NOTE: Pu, STRENGTH I DESIGN LOAD (KIPS) IS NOT THE VALUE USED IN THE FIELD FOR DRIVING PILES.
NOTE: THE PILE TYPE AND NUMBER OF PILES ARE TO BE INCLUDED ON THE SUMMARY QUANTITIES SHEET IN THE PLAN.

ABUTMENT NOTES:

MINIMUM CLEAR DISTANCE FROM FACE OF CONCRETE TO NEAR REINFORCING BAR IS TO BE 2" UNLESS OTHERWISE NOTED OR SHOWN.

IF NECESSARY TO PREVENT DAMAGE TO THE END OF THE BRIDGE DECK OR BACKWALL FROM CONSTRUCTION EQUIPMENT, AN APPROPRIATE METHOD OF PROTECTION APPROVED BY THE ENGINEER SHALL BE PROVIDED BY THE BRIDGE CONTRACTOR AT NO EXTRA COST TO THE COUNTY OR STATE.

ABUTMENT PILES SHALL BE DRIVEN TO VALUES SHOWN IN DESIGN PLANS.

PLACE 5h2 BAR AT 1:6 SLOPE TO MATCH TRAFFIC SIDE OF ABUTMENT WING FACE. (BOTH SIDES TYPICAL)

BARRIER RAIL NOT SHOWN IN DETAILS.

IF ROCK IS CLOSER THAN 15' BELOW ABUTMENT FOOTING, SPECIAL ANALYSIS MAY BE REQUIRED.

LATEST REVISION DATE

APPROVED BY BRIDGE ENGINEER

IOWA DOT Highway Division

STANDARD DESIGN - 40' ROADWAY, THREE SPAN BRIDGE

PRETENSIONED PRESTRESSED CONCRETE BEAM BRIDGES

SEPTEMBER, 2014

ABUTMENT DETAILS

30° SKEW A & B BEAMS

H40-18-14

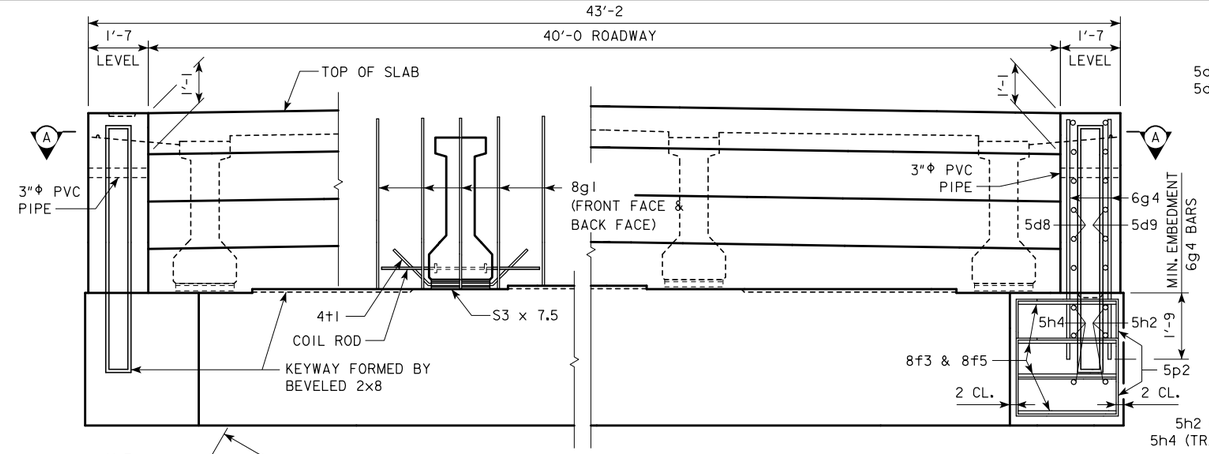

PART REAR ELEVATION AT ABUTMENT

NOTE: TOP OF ABUTMENT SHOWN FOR SOLID BARRIER RAIL

FIELD BEND 5h4 BAR AS NECESSARY TO AVOID PILE IN ABUTMENT WING.

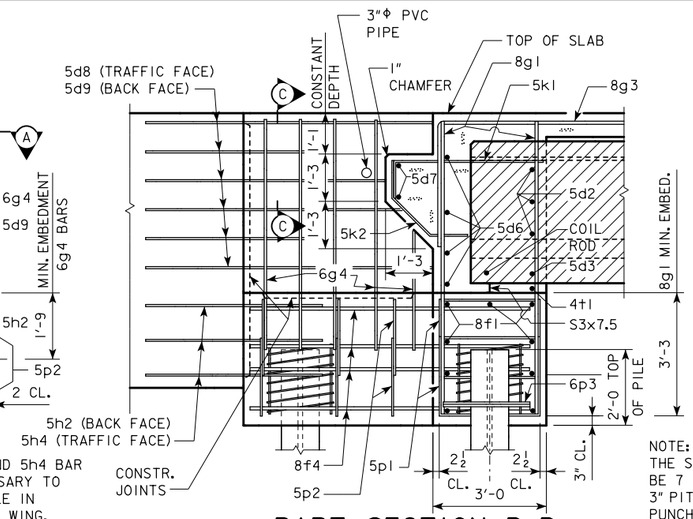

PART SECTION B-B

NOTE:
THE SPIRAL AT THE TOP OF EACH PILE TO BE 7 TURNS OF NO. 2 BAR, 21" DIAMETER, 3" PITCH WITH 3 - L $\frac{7}{8} \times \frac{7}{8} \times \frac{1}{8}$ SPACERS PUNCHED TO HOLD SPIRAL.

ABUTMENT NOTES:

MINIMUM CLEAR DISTANCE FROM FACE OF CONCRETE TO NEAR REINFORCING BAR IS TO BE 2" UNLESS OTHERWISE NOTED OR SHOWN.

IF NECESSARY TO PREVENT DAMAGE TO THE END OF THE BRIDGE DECK OR BACKWALL FROM CONSTRUCTION EQUIPMENT, AN APPROPRIATE METHOD OF PROTECTION APPROVED BY THE ENGINEER SHALL BE PROVIDED BY THE BRIDGE CONTRACTOR AT NO EXTRA COST TO THE COUNTY OR STATE.

ABUTMENT PILES SHALL BE DRIVEN TO VALUES SHOWN IN DESIGN PLANS.

BARRIER RAIL NOT SHOWN IN DETAILS.

IF ROCK IS CLOSER THAN 15' BELOW ABUTMENT FOOTING, SPECIAL ANALYSIS MAY BE REQUIRED.

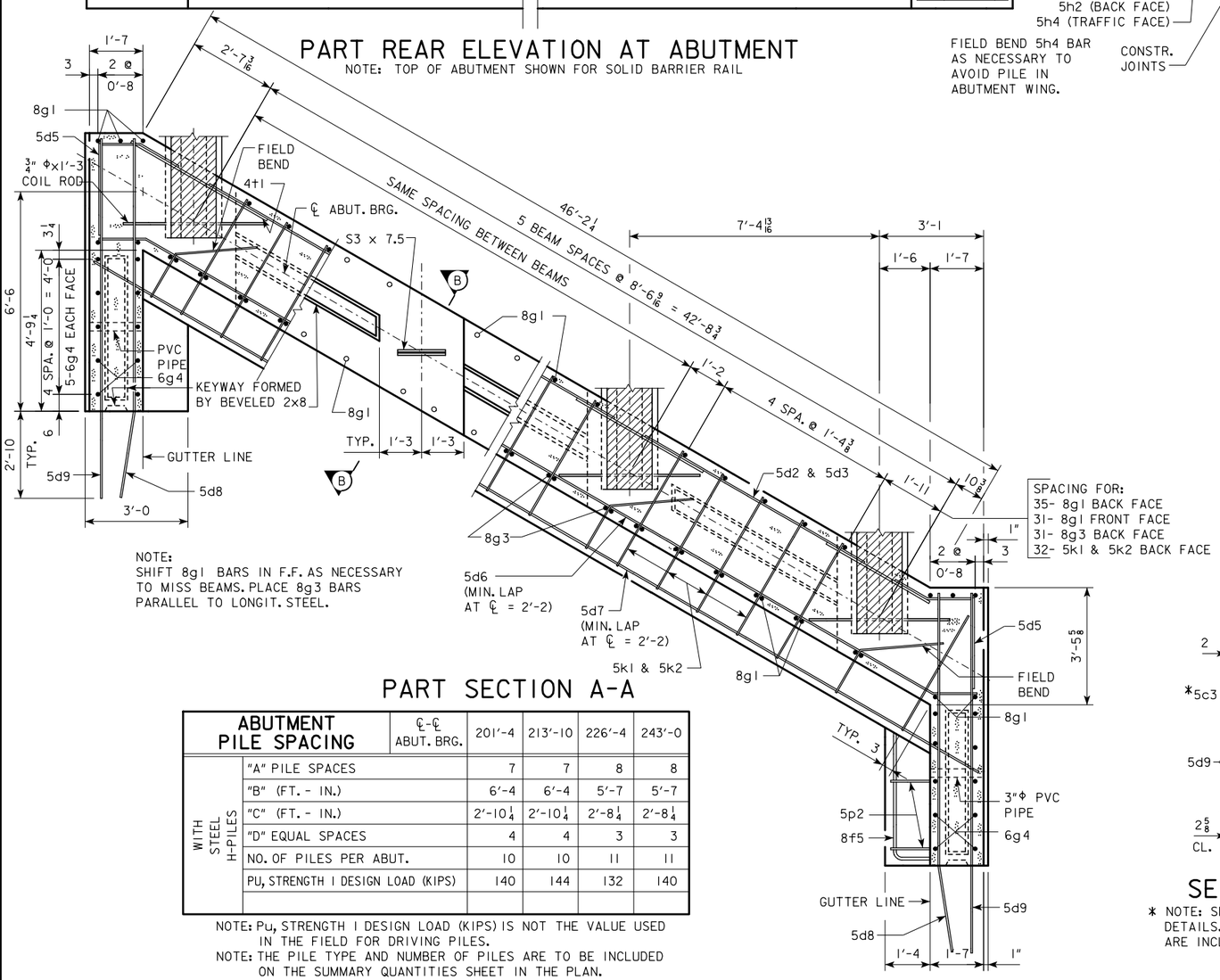

NOTE:
SHIFT 8g1 BARS IN F.F. AS NECESSARY TO MISS BEAMS. PLACE 8g3 BARS PARALLEL TO LONGIT. STEEL.

PART SECTION A-A

ABUTMENT PILE SPACING	℄-℄ ABUT. BRG.	201'-4	213'-10	226'-4	243'-0
WITH STEEL H-PILES	"A" PILE SPACES	7	7	8	8
	"B" (FT. - IN.)	6'-4	6'-4	5'-7	5'-7
	"C" (FT. - IN.)	2'-10 1/4	2'-10 1/4	2'-8 1/4	2'-8 1/4
	"D" EQUAL SPACES	4	4	3	3
	NO. OF PILES PER ABUT.	10	10	11	11
	PU, STRENGTH I DESIGN LOAD (KIPS)	140	144	132	140

NOTE: Pu, STRENGTH I DESIGN LOAD (KIPS) IS NOT THE VALUE USED IN THE FIELD FOR DRIVING PILES.
NOTE: THE PILE TYPE AND NUMBER OF PILES ARE TO BE INCLUDED ON THE SUMMARY QUANTITIES SHEET IN THE PLAN.

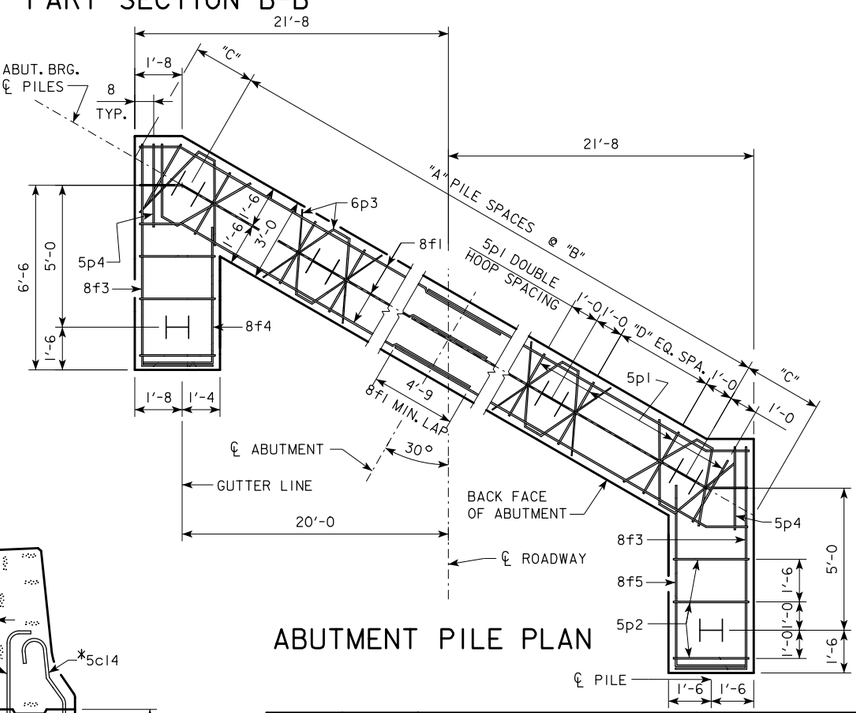

ABUTMENT PILE PLAN

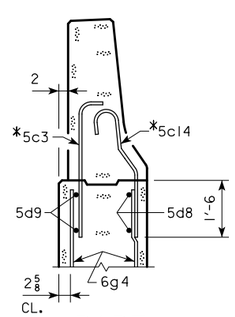

PART SECTION C-C

* NOTE: SEE BARRIER RAIL SHEET FOR DETAILS. REINFORCING BARS 5c3 AND 5c14 ARE INCLUDED IN BARRIER RAIL QUANTITIES.

LATEST REVISION DATE

APPROVED BY BRIDGE ENGINEER

IOWA DOT Highway Division

STANDARD DESIGN - 40' ROADWAY, THREE SPAN BRIDGE

PRETENSIONED PRESTRESSED CONCRETE BEAM BRIDGES

SEPTEMBER, 2014

ABUTMENT DETAILS

30° SKEW C BEAMS

H40-19-14

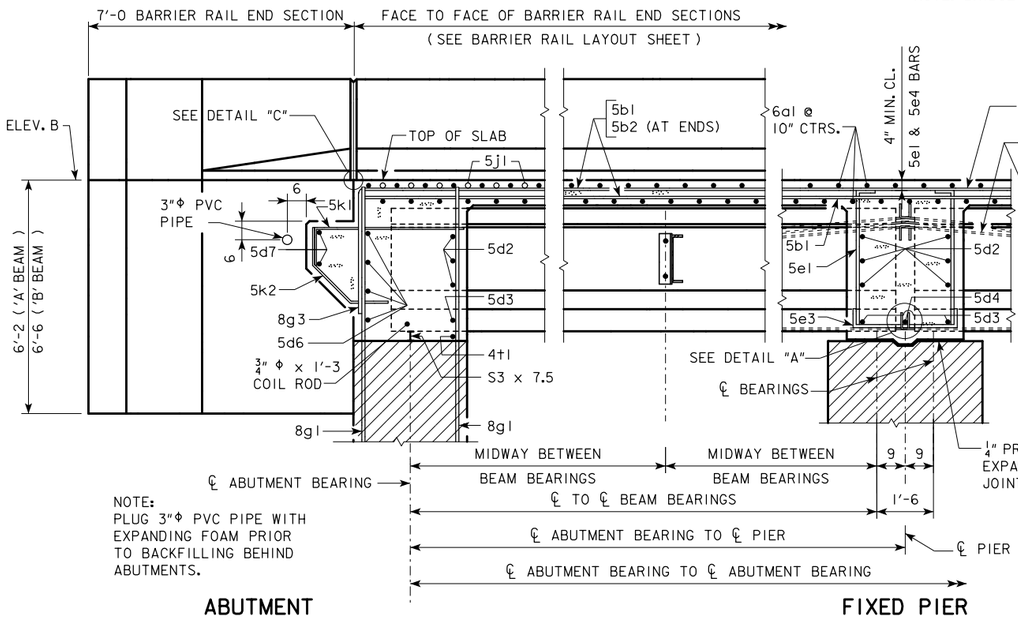

NOTE:
PLUG 3"Φ PVC PIPE WITH EXPANDING FOAM PRIOR TO BACKFILLING BEHIND ABUTMENTS.

EXPANSION PIER
(REQUIRED AT ONE PIER, ONLY IF TEE PIERS ARE USED)

PART LONGITUDINAL SECTION NEAR GUTTER

(FOR DETAILS OF INTERMEDIATE DIAPHRAGM SEE SHEET H40-38-14)

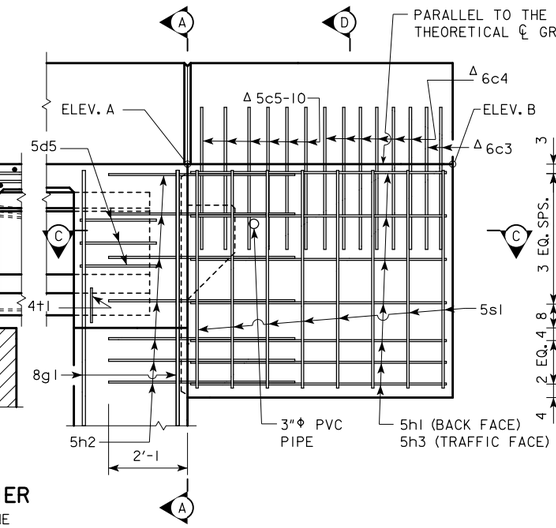

PART END VIEW AT ABUTMENT

PROVIDE ELEVATIONS A AND B IN THE BRIDGE PLAN SHEETS.

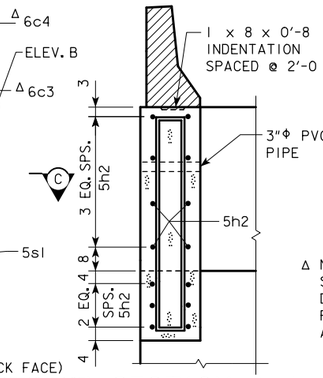

SECTION A-A

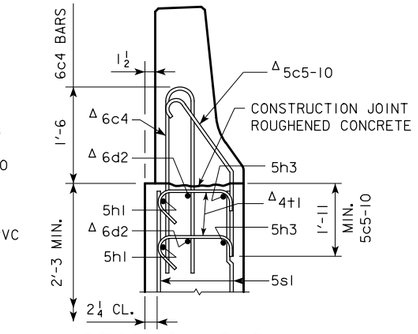

SECTION D-D

Δ NOTE:
SEE END SECTION DETAILS IN THESE PLANS FOR DETAILS OF BARRIER RAIL END SECTION.
REINFORCING BARS 6c3, 6c4, 5c5-10, 6d2 & 4t1 ARE INCLUDED IN THE BARRIER RAIL QUANTITIES.

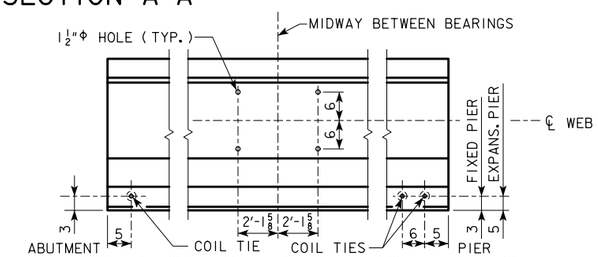

LOCATION OF BEAM COIL TIES AND STEEL DIAPHRAGM BOLT HOLES

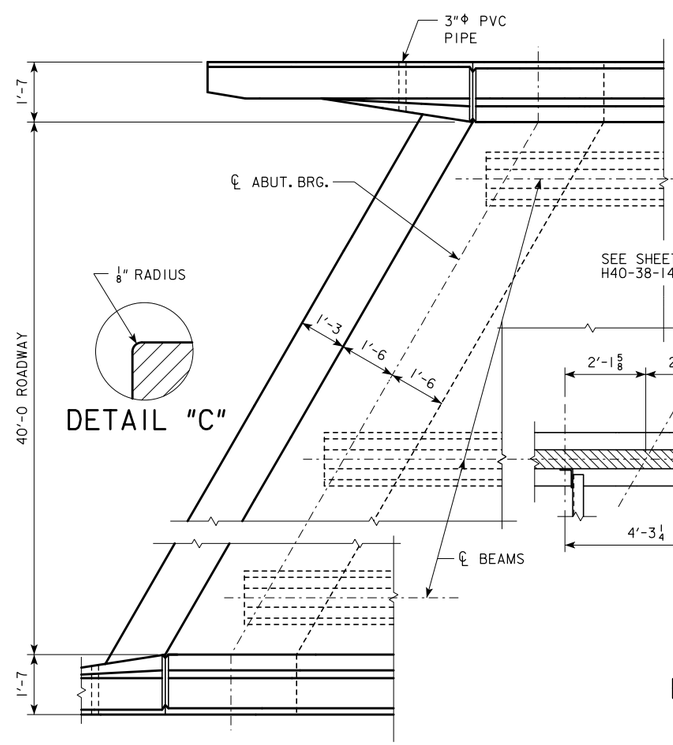

DETAIL "C"

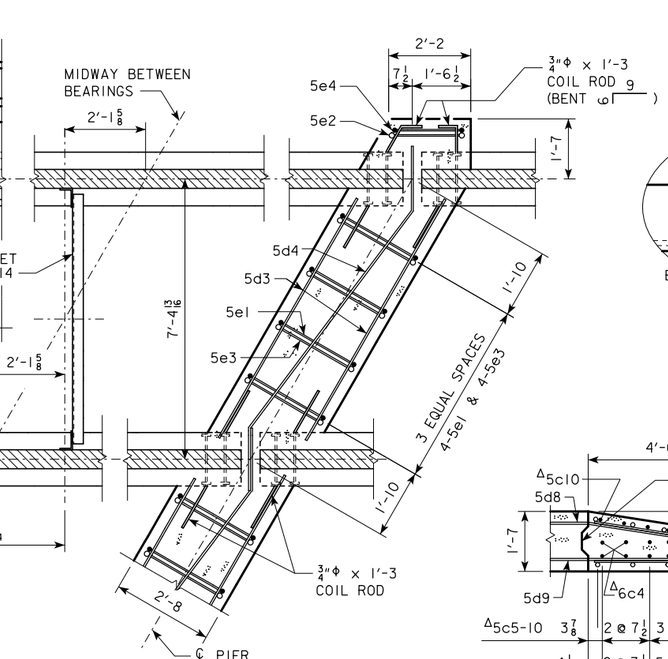

PART SECTION AT PIER

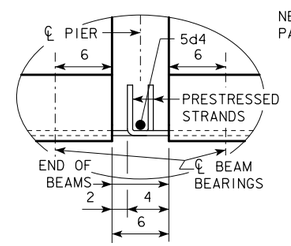

DETAIL "A"

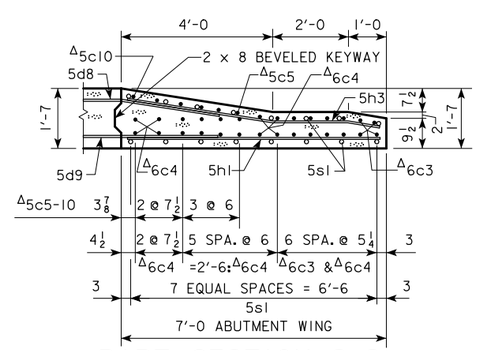

PART SECTION C-C

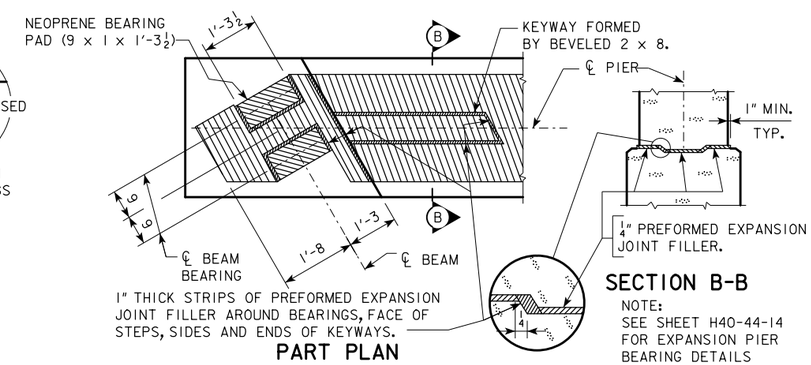

PART PLAN

SECTION B-B

NOTE:
SEE SHEET H40-44-14 FOR EXPANSION PIER BEARING DETAILS

TOP OF FIXED PIER DETAILS

LATEST REVISION DATE

APPROVED BY BRIDGE ENGINEER

IOWA DOT Highway Division

STANDARD DESIGN - 40' ROADWAY, THREE SPAN BRIDGE

PRETENSIONED PRESTRESSED CONCRETE BEAM BRIDGES

SEPTEMBER, 2014

LONGITUDINAL SECTION

30° SKEW A & B BEAMS

H40-20-14

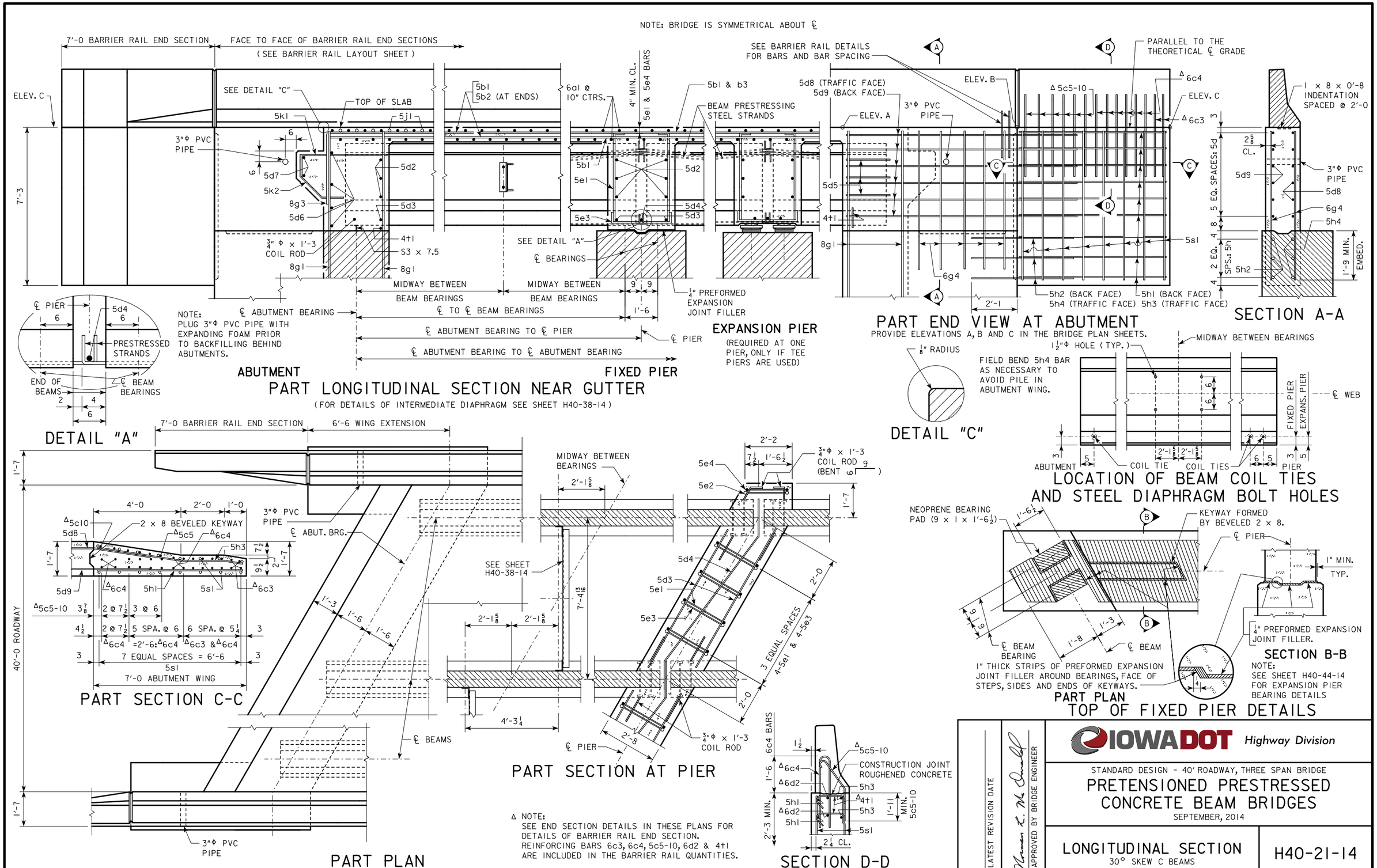
NOTE: BRIDGE IS SYMMETRICAL ABOUT ℄
7'-0 BARRIER RAIL END SECTION
FACE TO FACE OF BARRIER RAIL END SECTIONS
(SEE BARRIER RAIL LAYOUT SHEET)
ELEV. C
SEE DETAIL "C"
TOP OF SLAB
5k1
5j1
5b1
5b2 (AT ENDS)
6a1 @ 10" CTRS.
4" MIN. CL.
5e1 & 5e4 BARS
5b1 & b3
BEAM PRESTRESSING STEEL STRANDS
SEE BARRIER RAIL DETAILS FOR BARS AND BAR SPACING
5d8 (TRAFFIC FACE)
5d9 (BACK FACE)
ELEV. B
ELEV. A
3"Φ PVC PIPE
Δ 5c5-10
Δ 6c4
Δ 6c3
PARALLEL TO THE THEORETICAL ℄ GRADE
1 x 8 x 0'-8 INDENTATION SPACED @ 2'-0
7'-3
5d7
5k2
8g3
5d6
5d2
5d3
5e1
5e3
5d4
4t1
3/4" Φ x 1'-3 COIL ROD
S3 x 7.5
8g1
SEE DETAIL "A"
℄ BEARINGS
5d5
6g4
5s1
5h2 (BACK FACE)
5h4 (TRAFFIC FACE)
5h1 (BACK FACE)
5h3 (TRAFFIC FACE)
2'-1
5d9
5d8
6g4
5h4
5h2
2 5/8 CL.
5 EQ. SPACES: 5d
2 EQ. SPS.: 5h
1'-9 MIN. EMBED.
MIDWAY BETWEEN BEAM BEARINGS
℄ TO ℄ BEAM BEARINGS
℄ ABUTMENT BEARING TO ℄ PIER
℄ ABUTMENT BEARING TO ℄ ABUTMENT BEARING
1/4" PREFORMED EXPANSION JOINT FILLER
1'-6
℄ PIER
℄ ABUTMENT BEARING
NOTE: PLUG 3"Φ PVC PIPE WITH EXPANDING FOAM PRIOR TO BACKFILLING BEHIND ABUTMENTS.
ABUTMENT
FIXED PIER
EXPANSION PIER
(REQUIRED AT ONE PIER, ONLY IF TEE PIERS ARE USED)
PART LONGITUDINAL SECTION NEAR GUTTER
(FOR DETAILS OF INTERMEDIATE DIAPHRAGM SEE SHEET H40-38-14)
PART END VIEW AT ABUTMENT
PROVIDE ELEVATIONS A, B AND C IN THE BRIDGE PLAN SHEETS.
SECTION A-A
℄ PIER
5d4
PRESTRESSED STRANDS
END OF BEAMS
℄ BEAM BEARINGS
DETAIL "A"
1/8" RADIUS
DETAIL "C"
FIELD BEND 5h4 BAR AS NECESSARY TO AVOID PILE IN ABUTMENT WING.
1 1/2"Φ HOLE (TYP.)
MIDWAY BETWEEN BEARINGS
℄ WEB
FIXED PIER
EXPANS. PIER
ABUTMENT
COIL TIE
COIL TIES
PIER
LOCATION OF BEAM COIL TIES AND STEEL DIAPHRAGM BOLT HOLES
7'-0 BARRIER RAIL END SECTION
6'-6 WING EXTENSION
1'-7
40'-0 ROADWAY
4'-0
2'-0
1'-0
Δ5c10
2 x 8 BEVELED KEYWAY
5d8
Δ5c5
Δ6c4
5h3
5d9
5h1
5s1
Δ6c3
Δ5c5-10
2 @ 7 1/2
3 @ 6
5 SPA. @ 6
6 SPA. @ 5 1/4
Δ6c4 =2'-6: Δ6c4 Δ6c3 & Δ6c4
7 EQUAL SPACES = 6'-6
5s1
7'-0 ABUTMENT WING
PART SECTION C-C
3"Φ PVC PIPE
℄ ABUT. BRG.
℄ BEAMS
PART PLAN
MIDWAY BETWEEN BEARINGS
2'-1 5/8
SEE SHEET H40-38-14
7'-4 13/16
2'-1 5/8
4'-3 1/4
℄ PIER
5e4
5e2
3/4"Φ x 1'-3 COIL ROD (BENT 9)
5d4
5d3
5e1
5e3
2'-0
3 EQUAL SPACES 4-5e3
2'-8
3/4"Φ x 1'-3 COIL ROD
PART SECTION AT PIER
Δ NOTE:
SEE END SECTION DETAILS IN THESE PLANS FOR DETAILS OF BARRIER RAIL END SECTION.
REINFORCING BARS 6c3, 6c4, 5c5-10, 6d2 & 4t1 ARE INCLUDED IN THE BARRIER RAIL QUANTITIES.
6c4 BARS
Δ5c5-10
CONSTRUCTION JOINT ROUGHENED CONCRETE
Δ6c4
Δ6d2
5h3
Δ4t1
5h1
5s1
2'-3 MIN.
1'-1 MIN. 5c5-10
2 1/4 CL.
SECTION D-D
NEOPRENE BEARING PAD (9 x 1 x 1'-6 1/2)
KEYWAY FORMED BY BEVELED 2 x 8.
℄ PIER
1" MIN. TYP.
℄ BEAM BEARING
℄ BEAM
1" THICK STRIPS OF PREFORMED EXPANSION JOINT FILLER AROUND BEARINGS, FACE OF STEPS, SIDES AND ENDS OF KEYWAYS.
PART PLAN
1/4" PREFORMED EXPANSION JOINT FILLER.
SECTION B-B
NOTE:
SEE SHEET H40-44-14 FOR EXPANSION PIER BEARING DETAILS
TOP OF FIXED PIER DETAILS
LATEST REVISION DATE
APPROVED BY BRIDGE ENGINEER
IOWADOT Highway Division
STANDARD DESIGN - 40' ROADWAY, THREE SPAN BRIDGE
PRETENSIONED PRESTRESSED CONCRETE BEAM BRIDGES
SEPTEMBER, 2014
LONGITUDINAL SECTION
30° SKEW C BEAMS
H40-21-14

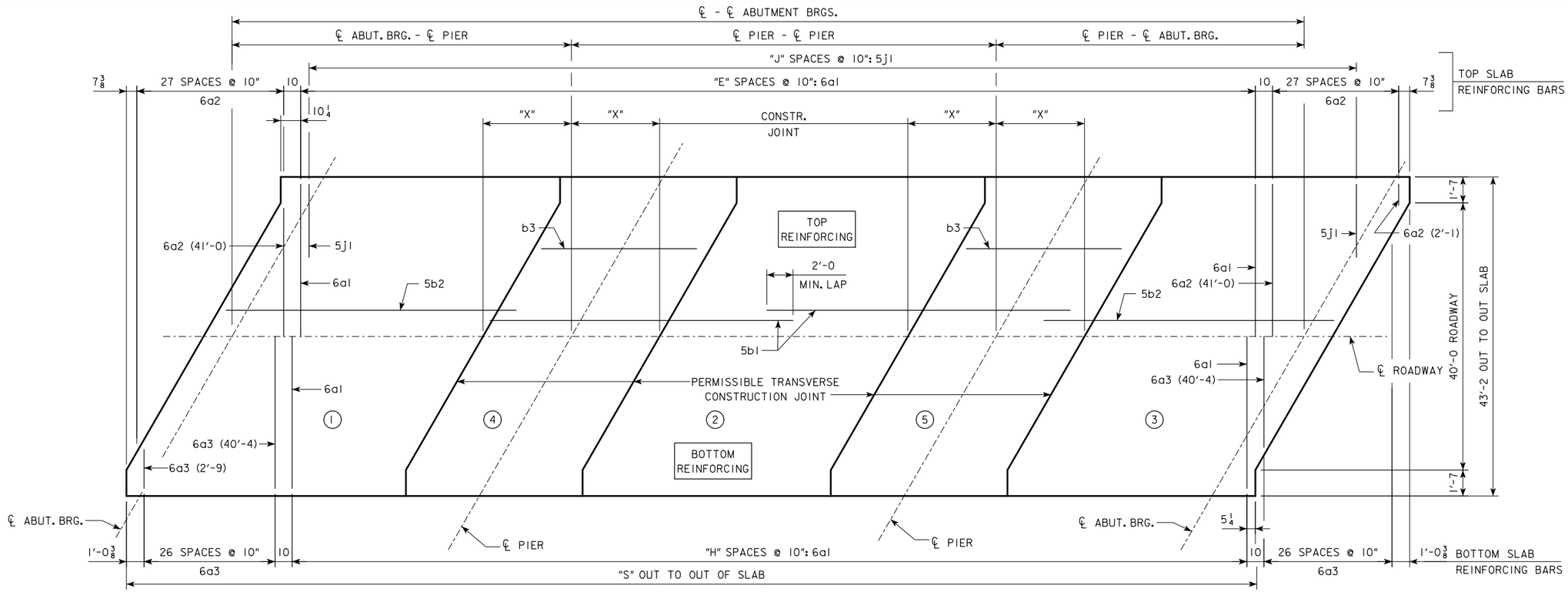

SLAB LAYOUT

(LEFT AHEAD SKEW SHOWN, RIGHT AHEAD SKEW SIMILAR)

ESTIMATED QUANTITIES

(SUPERSTRUCTURE PLUS INTEGRAL ABUTMENTS)

		℄-℄ ABUT. BRG.	138'-10	151'-4	163'-10	176'-4	188'-10	201'-4	213'-10	226'-4	243'-0
PRETENSIONED PRESTRESSED CONCRETE BEAM, CENTER SPAN		NO.	6-A50	6-A55	6-B59	6-B63	6-B67	6-C71	6-C75	6-C80	6-C80
PRETENSIONED PRESTRESSED CONCRETE BEAM, END SPAN		NO.	12-A42	12-A46	12-B50	12-B55	12-B59	12-C63	12-C67	12-C71	12-C80
CONCRETE RAIL (BARRIER OR OPEN)		L.F.	312.6	337.6	362.6	387.6	412.6	456.7	481.7	506.7	540.0
NO. OF WOOD PILES, TREATED FOR TWO ABUTMENTS		NO.	30	30	32	34	34	-----	-----	-----	-----
NO. OF STEEL H-PILES FOR TWO ABUTMENTS (HP 10 x 57)		NO.	14	14	14	14	16	20	20	22	22
PREBORED HOLES (w/ WOOD PILES)		L.F.	300	300	320	340	340	-----	-----	-----	-----
PREBORED HOLES (w/ STEEL H-PILES)		L.F.	140	140	140	140	160	200	200	220	220
WING ARMORING		S.Y.	3.6	3.6	3.6	3.6	3.6	5.7	5.7	5.7	5.7

NOTE:
FOR QUANTITIES OF STRUCTURAL CONCRETE, REINFORCING STEEL AND STRUCTURAL STEEL, REFER TO THE SUMMARY QUANTITIES SHEET IN THE BRIDGE PLANS.

Δ NOTE:
CONCRETE QUANTITIES SHALL BE LISTED ON THE SUMMARY QUANTITIES SHEET.

Δ CONCRETE PLACEMENT QUANT.

(SUPERSTRUCTURE PLUS INTEGRAL ABUTMENTS)

			℄-℄ ABUT. BRG.	138'-10	151'-4	163'-10	176'-4	188'-10	201'-4	213'-10	226'-4	243'-0
SLAB INCLUDING HAUNCH, ABUT. DIAPHRAGM, & WINGWALLS** , SECTIONS 1 & 3	WITH BARRIER RAIL	C.Y.	124.0	132.0	146.2	154.4	162.4	180.2	188.4	197.0	216.2
	WITH OPEN RAIL	C.Y.	125.3	133.4	147.8	156.1	164.2	182.1	190.4	199.1	218.6
SLAB INCLUDING HAUNCH, SECTION 2	WITH BARRIER RAIL	C.Y.	43.5	47.0	50.5	54.0	57.3	61.1	64.6	68.1	68.1
	WITH OPEN RAIL	C.Y.	44.2	47.8	51.3	54.9	58.3	62.1	65.6	69.2	69.2
SLAB INCLUDING HAUNCH & PIER DIAPHRAGM, SECTIONS 4 & 5	WITH BARRIER RAIL	C.Y.	52.8	55.2	62.0	64.4	67.2	72.2	74.4	76.8	76.8
	WITH OPEN RAIL	C.Y.	53.3	55.7	62.6	65.0	67.8	72.8	75.1	77.5	77.5
ABUTMENT WINGS		C.Y.	7.2	7.2	7.6	7.6	7.6	8.4	8.4	8.4	8.4
ABUTMENT FOOTINGS (w/ WOOD PILES) ***		C.Y.	39.1	39.1	38.9	38.8	38.8	-----	-----	-----	-----
ABUTMENT FOOTINGS (w/ STEEL H PILES) ***		C.Y.	40.8	40.8	40.8	40.8	40.8	48.4	48.4	48.4	48.4

GENERAL DATA

		℄-℄ ABUT. BRG.	138'-10	151'-4	163'-10	176'-4	188'-10	201'-4	213'-10	226'-4	243'-0
VERTICAL CURVE	TOP OF SLAB TO ABUT. CONSTR. JT. AT C.L. ABUT. BRG.	"U"	3'-8	3'-7 13/16	4'-2 7/8	4'-2 13/16	4'-2 7/8	4'-8 9/16	4'-8 11/16	4'-9 1/8	4'-9 7/16
	TOP OF SLAB TO PIER TOP AT C.L. PIER*	"U"	3'-6 3/8	3'-6 9/16	4'-1 5/16	4'-1 1/2	4'-1 7/8	4'-7 5/16	4'-7 1/4	4'-7 1/2	4'-7 1/2
STRAIGHT GRADE	TOP OF SLAB TO ABUT. CONSTR. JT. AT C.L. ABUT. BRG.	"U"	3'-8 1/16	3'-7 7/8	4'-2 15/16	4'-2 15/16	4'-3	4'-8 3/4	4'-8 7/8	4'-9 5/16	4'-9 7/8
	TOP OF SLAB TO PIER TOP AT C.L. PIER*	"U"	3'-6 9/16	3'-6 3/4	4'-1 9/16	4'-1 13/16	4'-2 1/4	4'-7 11/16	4'-7 11/16	4'-8	4'-8
D.L. PIER REACTION (D.L. + F.W.S.) SERVICE LOADS		KIPS	446.0	480.7	549.2	585.8	622.7	743.2	784.2	825.8	866.1
L.L. PIER REACTION (HL93) NO IMPACT SERVICE LOADS		KIPS	264.7	274.5	283.9	293.1	302.2	311.0	322.9	341.9	362.6
NO. OF SPACES FOR 6a1 BARS (TOP)		"E"	141	156	171	186	201	216	231	246	266
NO. OF SPACES FOR 6a1 BARS (BOTTOM)		"H"	142	157	172	187	202	217	232	247	267
NO. OF SPACES FOR 5j1 BARS (TOP)		"J"	165	180	195	210	225	240	255	270	290
OUT TO OUT OF SLAB		"S"	142'-3 5/8	154'-9 5/8	167'-3 5/8	179'-9 5/8	192'-3 5/8	204'-9 5/8	217'-3 5/8	229'-9 5/8	246'-5 5/8
SLAB TRANSVERSE CONSTR. JT. DISTANCE FROM C.L. PIER		"X"	6'-7	7'-1	7'-7	8'-1	8'-8	9'-2	9'-8	10'-2	10'-2

NOTE: CONCRETE DECK SHALL BE PLACED IN SECTIONS AND SEQUENCES INDICATED. ALTERNATE PROCEDURES FOR PLACING DECK CONCRETE MAY BE SUBMITTED FOR APPROVAL TOGETHER WITH A STATEMENT OF THE PROPOSED METHOD AND EVIDENCE THAT THE CONTRACTOR POSSESSES THE NECESSARY EQUIPMENT AND FACILITIES TO ACCOMPLISH THE REQUIRED RESULTS. FOR APPROVED ALTERNATE PROCEDURES THE ENGINEER SHALL DETERMINE IF A RETARDING ADMIXTURE IS REQUIRED TO MAINTAIN PLASTICITY OF THE CONCRETE DECK DURING PLACEMENT.

* VALUES SHOWN ARE FOR FIXED PIERS ONLY AND ALLOW FOR 1/16 INCH DEFLECTION OF THE 1 INCH NEOPRENE BEARING PAD. AT EXPANSION PIER LOCATIONS ADD 3 1/16 INCHES TO "U" VALUES SHOWN.

** WINGWALLS APPLY ONLY TO BRIDGES USING "C" BEAMS.

07-15
LATEST REVISION DATE

APPROVED BY BRIDGE ENGINEER

IOWA DOT Highway Division

STANDARD DESIGN - 40' ROADWAY, THREE SPAN BRIDGE

PRETENSIONED PRESTRESSED CONCRETE BEAM BRIDGES

SEPTEMBER, 2014

SUPERSTRUCTURE DETAILS

30° SKEW

H40-22-14

REVISED 07-2015 - CHANGED CONCRETE PLACEMENT NOTE TO ACCOUNT FOR THE POSSIBLE ADDITION OF A RETARDING ADMIXTURE TO THE CONCRETE.

REINFORCING BAR LIST

ONE SUPERSTRUCTURE AND TWO ABUTMENTS

EPOXY COATED REINFORCING

BAR	LOCATION	SHAPE	NO.	LENGTH	WEIGHT	NO.	LENGTH	WEIGHT	NO.	LENGTH	WEIGHT	NO.	LENGTH	WEIGHT	NO.	LENGTH	WEIGHT	NO.	LENGTH	WEIGHT	NO.	LENGTH	WEIGHT	NO.	LENGTH	WEIGHT	NO.	LENGTH	WEIGHT	NO.	LENGTH	WEIGHT
	℄-℄ ABUT. BRG.		138'-10			151'-4			163'-10			176'-4			188'-10			201'-4			213'-10			226'-4			243'-0				
	℄-℄ BEAM BRG.		42'-6	50'-10	42'-6	46'-8	55'-0	46'-8	50'-10	59'-2	50'-10	55'-0	63'-4	55'-0	59'-2	67'-6	59'-2	63'-4	71'-8	63'-4	67'-6	75'-10	67'-6	71'-8	80'-0	71'-8	80'-0	80'-0	80'-0			
	BEAM SERIES		A BEAM			A BEAM			B BEAM			B BEAM			B BEAM			C BEAM			C BEAM			C BEAM			C BEAM					
6a1	SLAB TRANSV. TOP & BOTT.		285	42'-10	18,336	315	42'-10	20,266	345	42'-10	22,196	375	42'-10	24,126	405	42'-10	26,056	435	42'-10	27,986	465	42'-10	29,916	495	42'-10	31,846	535	42'-10	34,420			
6a2	SLAB TRANSV. TOP ENDS		56	VARIES	1,812	56	VARIES	1,812	56	VARIES	1,812	56	VARIES	1,812	56	VARIES	1,812	56	VARIES	1,812	56	VARIES	1,812	56	VARIES	1,812	56	VARIES	1,812			
6a3	SLAB TRANSV. BOTT. ENDS		54	VARIES	1,747	54	VARIES	1,747	54	VARIES	1,747	54	VARIES	1,747	54	VARIES	1,747	54	VARIES	1,747	54	VARIES	1,747	54	VARIES	1,747	54	VARIES	1,747			
5b1	SLAB LONGITUDINAL, TOP & BOTT.		202	40'-0	8,427	303	40'-0	12,641	303	40'-0	12,641	303	40'-0	12,641	303	40'-0	12,641	404	40'-0	16,855	404	40'-0	16,855	404	40'-0	16,855	505	40'-0	21,069			
5b2	SLAB LONGITUDINAL, TOP & BOTT., ENDS		202	34'-0	7,163	202	21'-3	4,477	202	27'-6	5,794	202	33'-9	7,111	202	40'-0	8,427	202	27'-3	5,741	202	33'-6	7,058	202	39'-9	8,375	202	29'-1	6,127			
6b3	SLAB LONGITUDINAL, TOP @ PIERS		92	12'-10	1,773	92	13'-10	1,912	92	14'-10	2,050	—	—	—	—	—	—	—	—	—	—	—	—	—	—	—	—	—	—			
7b3	SLAB LONGITUDINAL, TOP @ PIERS		—	—	—	—	—	—	—	—	—	92	15'-10	2,977	92	17'-0	3,197	92	18'-0	3,385	—	—	—	—	—	—	—	—	—			
8b3	SLAB LONGITUDINAL, TOP @ PIERS		—	—	—	—	—	—	—	—	—	—	—	—	—	—	—	—	—	—	92	19'-0	4,667	92	20'-0	4,913	92	20'-0	4,913			
5d1	PIER DIAPH. ENDS		12	3'-9	47	12	3'-9	47	12	3'-9	47	12	3'-9	47	12	3'-9	47	12	3'-9	47	12	3'-9	47	12	3'-9	47	12	3'-9	47			
5d2	PIER & ABUT. DIAPH. LONGIT.		90	7'-9	727209	90	7'-9	727	90	7'-9	727	90	7'-9	727	90	7'-9	727	90	7'-5	696	90	7'-5	696	90	7'-5	696	90	7'-5	696			
5d3	PIER & ABUT. DIAPH. LONGIT.		30	6'-8	111	30	6'-8	209	30	6'-8	209	30	6'-8	209	30	6'-8	209	30	6'-5	201	30	6'-5	201	30	6'-5	201	30	6'-5	201			
5d4	PIER DIAPH. LONGIT.		10	10'-8	68	10	10'-8	111	10	10'-8	111	10	10'-8	111	10	10'-8	111	10	10'-8	111	10	10'-8	111	10	10'-8	111	10	10'-8	111			
5d5	ABUT. DIAPH. ENDS		12	5'-5	428	12	5'-5	68	12	5'-5	68	12	5'-5	68	12	5'-5	68	12	5'-5	68	12	5'-5	68	12	5'-5	68	12	5'-5	68			
5d6	ABUT. DIAPH. LONGIT. B.F.		16	25'-8	213	16	25'-8	428	16	25'-8	428	16	25'-8	428	16	25'-8	428	16	25'-8	428	16	25'-8	428	16	25'-8	428	16	25'-8	428			
5d7	PAVING NOTCH LONGIT.		8	25'-6		8	25'-6	213	8	25'-6	213	8	25'-6	213	8	25'-6	213	8	25'-6	213	8	25'-6	213	8	25'-6	213	8	25'-6	213			
5d8	ABUT. DIAPH. WING EXT. LONGIT.		—	—	—	—	—	—	—	—	—	—	—	—	—	—	—	24	11'-0	275	24	11'-0	275	24	11'-0	275	24	11'-0	275			
5d9	ABUT. DIAPH. WING EXT. LONGIT.		—	—	379	—	—	—	—	—	—	—	—	—	—	—	—	24	10'-11	273	24	10'-11	273	24	10'-11	273	24	10'-11	273			
5e1	PIER DIAPH. HOOPS		40	9'-1	11	40	9'-1	379	40	10'-4	431	40	10'-4	431	40	10'-4	431	40	11'-4	473	40	11'-4	473	40	11'-4	473	40	11'-4	473			
5e2	PIER DIAPH. TIES ENDS		4	2'-7	143	4	2'-7	11	4	2'-7	11	4	2'-7	11	4	2'-7	11	4	2'-7	11	4	2'-7	11	4	2'-7	11	4	2'-7	11			
5e3	PIER DIAPH. TIES		40	3'-5	34	40	3'-5	143	40	3'-5	143	40	3'-5	143	40	3'-5	143	40	3'-5	143	40	3'-5	143	40	3'-5	143	40	3'-5	143			
5e4	PIER DIAPH. HOOPS ENDS		4	8'-3		4	8'-3	34	4	9'-6	40	4	9'-6	40	4	9'-6	40	4	10'-6	44	4	10'-6	44	4	10'-6	44	4	10'-6	44			
					2,587																											
8f1	ABUT. FOOTING LONGIT.		36	26'-11		36	26'-11	2,587	36	26'-11	2,587	36	26'-11	2,587	36	26'-11	2,587	36	27'-0	2,595	36	27'-0	2,595	36	27'-0	2,595	36	27'-0	2,595			
8f3	ABUT. EXTENSION LONGIT.		—	—	—	—	—	—	—	—	—	—	—	—	—	—	—	16	10'-4	441	16	10'-4	441	16	10'-4	441	16	10'-4	441			
8f4	ABUT. EXTENSION LONGIT.		—	—	—	—	—	—	—	—	—	—	—	—	—	—	—	8	7'-9	166	8	7'-9	166	8	7'-9	166	8	7'-9	166			
8f5	ABUT. EXTENSION LONGIT.		—	—	—	—	—	—	—	—	—	—	—	—	—	—	—	8	9'-0	192	8	9'-0	192	8	9'-0	192	8	9'-0	192			
					2,421																											
8g1	ABUT. VERT.		136	6'-8	2,524	136	6'-8	2,421	136	7'-3	2,633	136	7'-3	2,633	136	7'-3	2,633	132	7'-9	2,731	132	7'-9	2,731	132	7'-9	2,731	132	7'-10	2,761			
8g3	ABUT. DIAPH. VERT. B.F.		62	15'-3		62	15'-3	2,524	62	15'-3	2,524	62	15'-3	2,524	62	15'-3	2,524	62	15'-9	2,607	62	15'-9	2,607	62	15'-9	2,607	62	15'-9	2,607			
6g4	ABUT. DIAPH. WING EXT. VERT.		—	—	—	—	—	—	—	—	—	—	—	—	—	—	—	40	6'-6	391	40	6'-6	391	40	6'-7	396	40	6'-7	396			
					195																											
5h1	ABUT. WING HORIZ. B.F.		28	6'-8	287	28	6'-8	195	28	6'-8	195	28	6'-8	195	28	6'-8	195	36	6'-8	250	36	6'-8	250	36	6'-8	250	36	6'-8	250			
5h2	ABUT. TO WING ANCHOR		56	4'-11	197	56	4'-11	287	56	4'-11	287	56	4'-11	287	56	4'-11	287	12	4'-11	62	12	4'-11	62	12	4'-11	62	12	4'-11	62			
5h3	ABUT. WING HORIZ. TRAFFIC FACE		28	6'-9		28	6'-9	197	28	6'-9	197	28	6'-9	197	28	6'-9	197	36	6'-9	253	36	6'-9	253	36	6'-9	253	36	6'-9	253			
5h4	ABUT. TO WING ANCHOR		—	—	2,164	—	—	—	—	—	—	—	—	—	—	—	—	12	4'-11	62	12	4'-11	62	12	4'-11	62	12	4'-11	62			
5j1	TOP OF SLAB TRANSV. (AT RAIL)		332	6'-3	317	362	6'-3	2,360	392	6'-3	2,555	422	6'-3	2,751	452	6'-3	2,946	482	6'-3	3,142	512	6'-3	3,338	542	6'-3	3,533	582	6'-3	3,794			
5k1	PAVING NOTCH		64	4'-9	228	64	4'-9	317	64	4'-9	317	64	4'-9	317	64	4'-9	317	64	4'-9	317	64	4'-9	317	64	4'-9	317	64	4'-9	317			
5k2	PAVING NOTCH		64	3'-5		64	3'-5	228	64	3'-5	228	64	3'-5	228	64	3'-5	228	64	3'-5	228	64	3'-5	228	64	3'-5	228	64	3'-5	228			
					1227/1577																											
5p1	ABUTMENT HOOPS (WOOD/STEEL)		112/144	10'-6	95	112/144	10'-6	1227/1577	120/144	10'-6	1314/1577	128/144	10'-6	1402/1577	128/140	10'-6	1402/1533	148	10'-6	1,621	148	10'-6	1,621	136	10'-6	1,489	136	10'-6	1,489			
5p2	ABUTMENT HOOPS		8	11'-5		8	11'-5	95	8	11'-5	95	8	11'-5	95	8	11'-5	95	24	10'-8	267	24	10'-8	267	24	10'-8	267	24	10'-8	267			
6p3	ABUT. BOTT. AT PILES		—	—	—	—	—	—	—	—	—	—	—	—	—	—	—	32	6'-8	320	32	6'-8	320	36	6'-8	360	36	6'-8	360			
5p4	ABUT. HOOPS AT ENDS		—	—	—	—	—	—	—	—	—	—	—	—	—	—	—	8	11'-5	95	8	11'-5	95	8	11'-5	95	8	11'-5	95			
					389																											
5s1	WING VERT.		64	5'-10		64	5'-10	389	64	6'-2	412	64	6'-2	412	64	6'-2	412	64	6'-11	462	64	6'-11	462	64	6'-11	462	64	6'-11	462			
					38																											
4t1	UNDER BEAMS AT ABUTMENTS		12	4'-9		12	4'-9	38	12	4'-9	38	12	4'-9	38	12	4'-9	38	12	5'-0	40	12	5'-0	40	12	5'-0	40	12	5'-0	40			
					193/90																											
#2	PILE SPIRAL (WOOD/STEEL)*		30/14	38'-6	116/54	30/14	38'-6	193/90	32/14	38'-6	206/90	34/14	38'-6	219/90	34/16	38'-6	219/103	20	38'-6	129	20	38'-6	129	22	38'-6	141	22	38'-6	141			
	SPIRAL SPACERS, L $\frac{1}{8}\times\frac{1}{8}\times$ 0.70 (WOOD/STL.)*		90/42	1'-10		90/42	1'-10	116/54	96/42	1'-10	123/54	102/42	1'-10	131/54	102/48	1'-10	131/62	60	1'-10	77	60	1'-10	77	66	1'-10	85	66	1'-10	85			
	*EPOXY COATING NOT REQUIRED				54,606																											
	SUB TOTAL W/ WOOD PILES**				54,791			58,399			62,379			66,858			70,519			—			—			—			—			
	SUB TOTAL W/ STEEL H-PILES**							58,584			62,457			66,827			70,465			76,957			81,682			85,303			90,134			
	**RAIL REINFORCING NOT INCLUDED																															

NOTE: REINFORCING STEEL QUANTITIES ARE TO BE INCLUDED ON THE SUMMARY QUANTITIES SHEET IN THE PLAN.

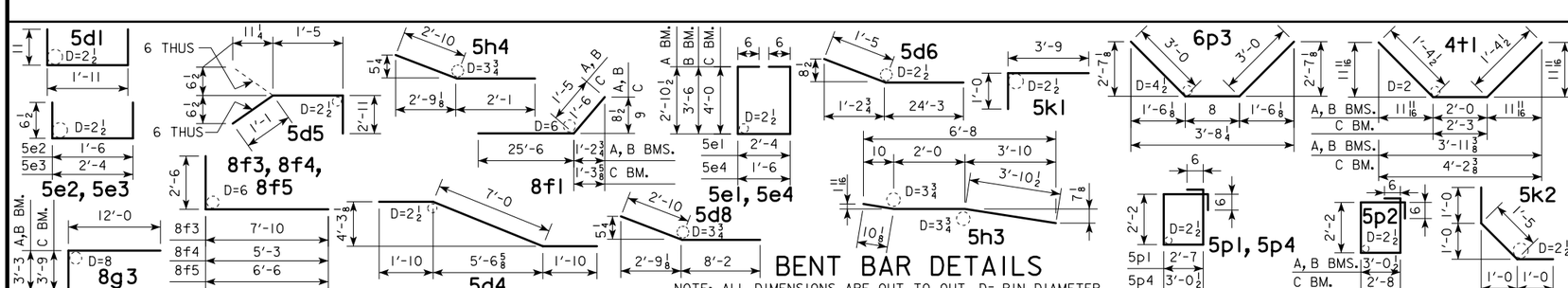

BENT BAR DETAILS

NOTE: ALL DIMENSIONS ARE OUT TO OUT. D= PIN DIAMETER

IOWA DOT Highway Division

STANDARD DESIGN - 40' ROADWAY, THREE SPAN BRIDGE

PRETENSIONED PRESTRESSED CONCRETE BEAM BRIDGES

SEPTEMBER, 2014

DECK & ABUTMENT REINF.

30° SKEW

H40-23-14

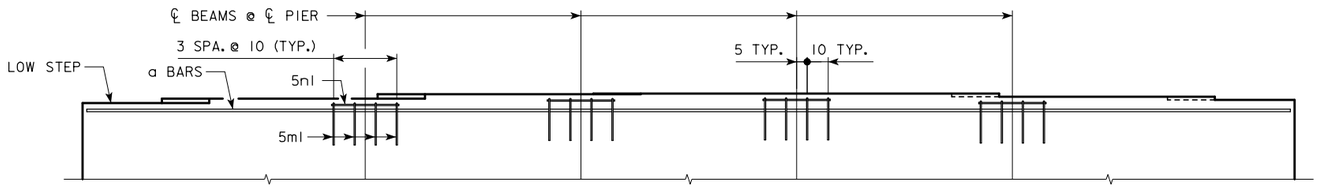

PART ELEVATION VIEW OF PIER CAP

GRADE (G): G <= 0.6%

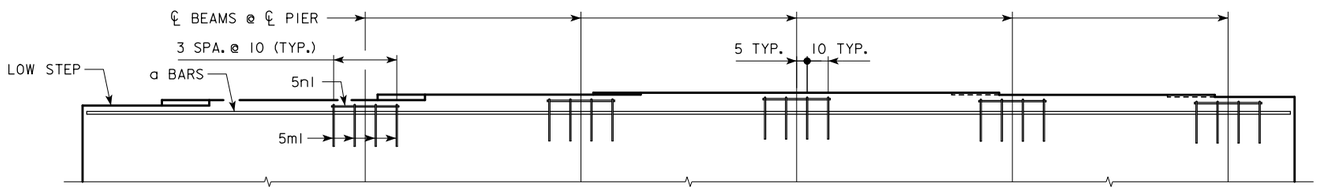

PART ELEVATION VIEW OF PIER CAP

GRADE (G): 0.6% < G <= 1.6%

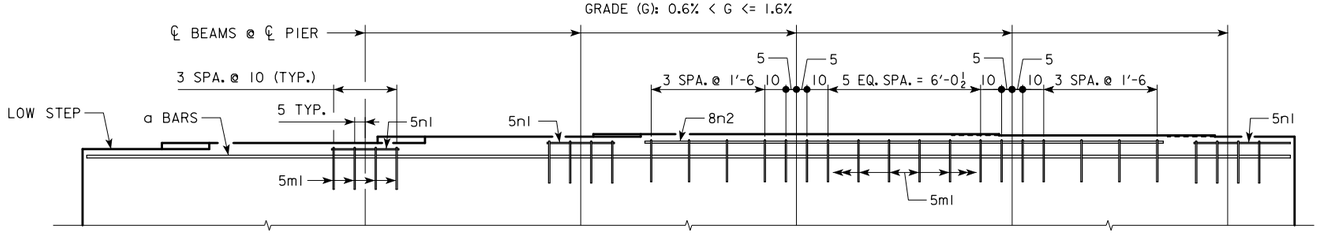

PART ELEVATION VIEW OF PIER CAP

GRADE (G): 1.6% < G <= 2.3%

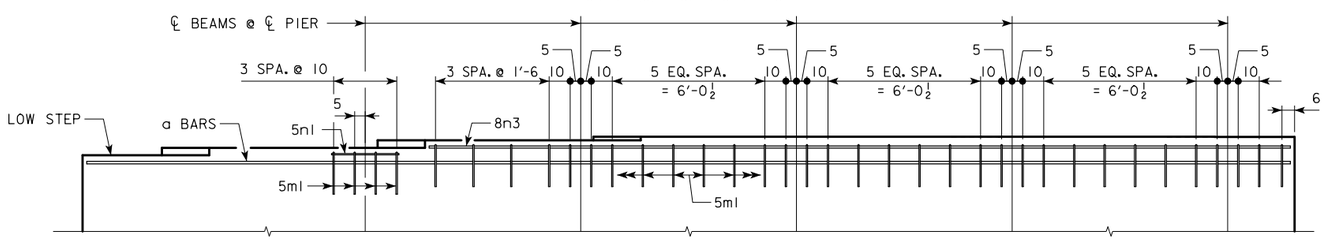

PART ELEVATION VIEW OF PIER CAP

GRADE (G): 2.3% < G <= 3.4%

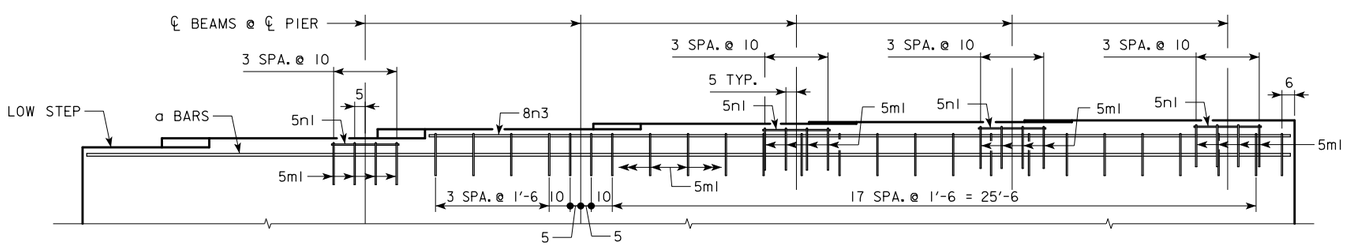

PART ELEVATION VIEW OF PIER CAP

GRADE (G): 3.4% < G <= 5.0%

STEP REINFORCING BAR LIST
ONE TEE PIER

			G <= 0.6%			0.6% < G <= 1.6%			1.6% < G <= 2.3%			2.3% < G <= 3.4%			3.4% < G <= 5.0%		
BAR	LENGTH	SHAPE	NO.	SIZE	WEIGHT	NO.	SIZE	WEIGHT	NO.	SIZE	WEIGHT	NO.	SIZE	WEIGHT	NO.	SIZE	WEIGHT
5m1	6'-10	⌐	16	5	114	20	5	143	30	5	214	36	5	257	41	5	292
5n1	2'-8	—	16	5	45	20	5	56	12	5	33	4	5	11	16	5	45
8n2	22'-4	—	--	--	--	--	--	--	4	8	239	--	--	--	--	--	--
*8n3	VARIES	—	--	--	--	--	--	--	--	--	--	4	8	373	4	8	373
TOTAL (LB.)					159			199			486			641			710

G = GRADE (%)

*8n3 BARS VARY FROM 34'-2 TO 35'-9

STEP REINFORCING BAR LIST
ONE PILE BENT PIER

			G <= 0.6%			0.6% < G <= 1.6%			1.6% < G <= 2.3%			2.3% < G <= 3.4%			3.4% < G <= 5.0%		
BAR	LENGTH	SHAPE	NO.	SIZE	WEIGHT	NO.	SIZE	WEIGHT	NO.	SIZE	WEIGHT	NO.	SIZE	WEIGHT	NO.	SIZE	WEIGHT
5m1	6'-9	⌐	16	5	113	20	5	141	30	5	211	36	5	253	41	5	289
5n1	2'-8	—	16	5	45	20	5	56	12	5	33	4	5	11	16	5	45
8n2	22'-4	—	--	--	--	--	--	--	4	8	239	--	--	--	--	--	--
*8n3	VARIES	—	--	--	--	--	--	--	--	--	--	4	8	373	4	8	373
TOTAL (LB.)					158			197			483			637			707

G = GRADE (%)

*8n3 BARS VARY FROM 34'-2 TO 35'-9

NOTE: THE REINFORCING STEEL QUANTITIES ARE TO BE INCLUDED ON THE SUMMARY QUANTITIES SHEET IN THE PLAN.

NOTE: THE CONCRETE QUANTITIES ARE TO BE INCLUDED ON THE SUMMARY QUANTITIES SHEET IN THE PLAN.

BENT BAR DETAILS

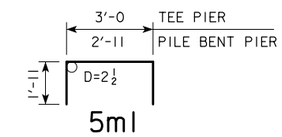

NOTE: ALL DIMENSIONS ARE OUT TO OUT.
D = PIN DIAMETER.

NOTES:

THE TABLE BELOW LISTS THE ADDITIONAL CONCRETE VOLUME REQUIRED IN EACH ABUTMENT FOOTING/PIER CAP BASED ON THE ROADWAY GRADE AT EACH ABUTMENT FOOTING/PIER CAP. ADDITIONAL CONCRETE SHOULD BE ADDED TO THE PLANS FOR EACH ABUTMENT FOOTING/PIER CAP THAT HAS 0.5 CU. YDS. OR MORE OF ADDITIONAL CONCRETE. VALUES SHOULD BE EXCLUDED FOR SCENARIOS THAT HAVE LESS THAN 0.5 CU. YDS. OF ADDITIONAL CONCRETE PER SUBSTRUCTURE UNIT. VALUES MAY BE INTERPOLATED FOR GRADES BETWEEN THE VALUES SHOWN IN THE TABLE.

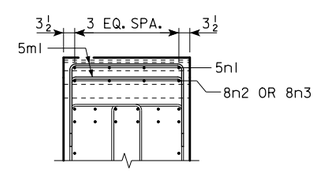

TYPICAL SECTION

ADDITIONAL CONCRETE VOLUME PER SUBSTRUCTURE UNIT (C.Y.)

	ROADWAY GRADE AT SUBSTRUCTURE UNIT				
	1%	2%	3%	4%	5%
EACH ABUTMENT FOOTING					
A, B BEAMS	-----	1.0	1.6	2.2	2.8
C BEAMS	-----	1.2	1.9	2.6	3.3
EACH TEE PIER CAP - ALL BEAMS	0.5	1.1	1.7	2.4	3.1
EACH PILE BENT PIER - ALL BEAMS	--	1.1	1.7	2.4	3.1

LATEST REVISION DATE

APPROVED BY BRIDGE ENGINEER

IOWA DOT Highway Division

STANDARD DESIGN - 40' ROADWAY, THREE SPAN BRIDGE

PRETENSIONED PRESTRESSED CONCRETE BEAM BRIDGES

SEPTEMBER, 2014

ADDITIONAL QUANTITIES

30° SKEW

H40-24-14

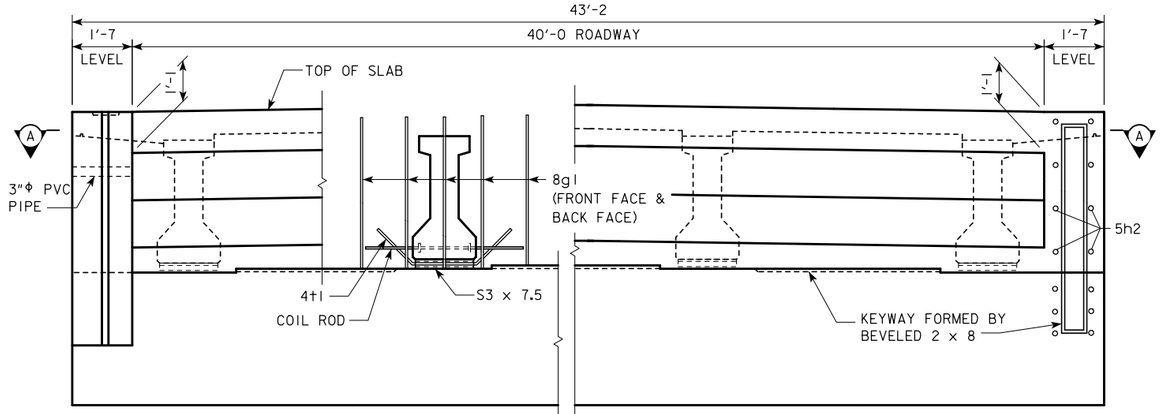

PART REAR ELEVATION AT ABUTMENT

NOTE: TOP OF ABUTMENT SHOWN FOR SOLID BARRIER RAIL

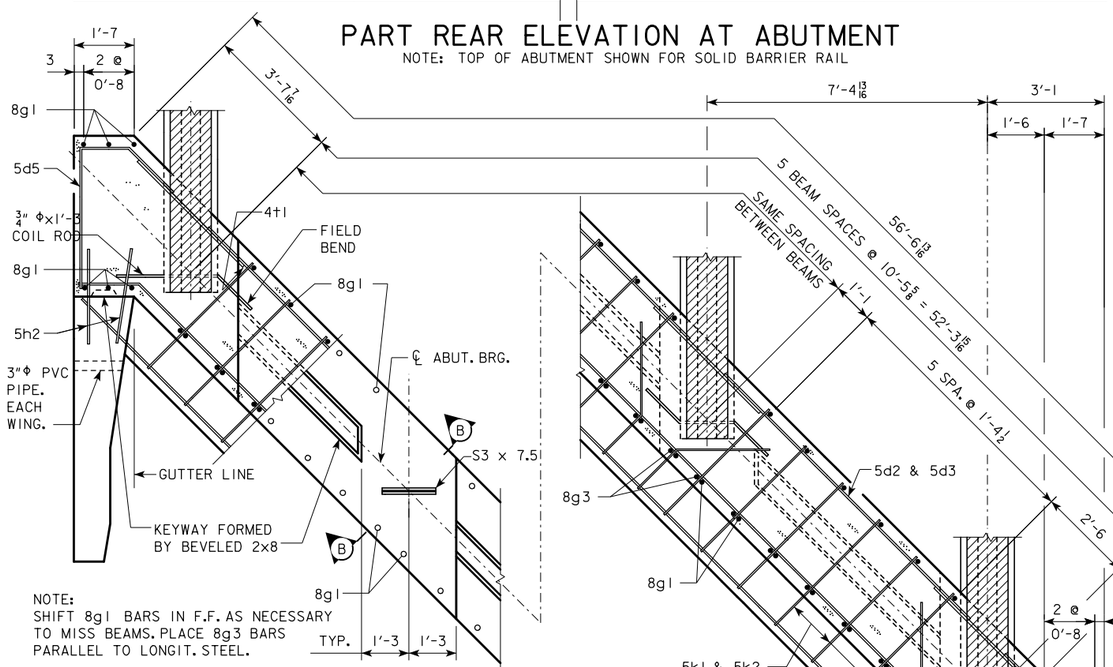

NOTE:
SHIFT 8g1 BARS IN F.F. AS NECESSARY TO MISS BEAMS. PLACE 8g3 BARS PARALLEL TO LONGIT. STEEL.

PART SECTION A-A

ABUTMENT PILE SPACING	℄-℄ ABUT. BRG.	138'-10	151'-4	163'-10	176'-4	188'-10
WITH WOOD PILES	"A" PILE SPACES	14	15	16	17	17
	"B" (FT. - IN.)	3'-10	3'-7	3'-5	3'-2	3'-2
	"C" (FT. - IN.)	3'-8 5/16	3'-7 13/16	3'-2 5/16	3'-7 5/16	3'-7 5/16
	"D" EQUAL SPACES	2	2	2	1	1
	NO. OF PILES PER ABUT.	15	16	17	18	18
	PU, STRENGTH I DESIGN LOAD (KIPS)	58	56	57	55	57
WITH STEEL H-PILES	"A" PILE SPACES	7	7	7	7	7
	"B" (FT. - IN.)	7'-9	7'-9	7'-9	7'-9	7'-9
	"C" (FT. - IN.)	3'-4 13/16	3'-4 13/16	3'-4 13/16	3'-4 13/16	3'-4 13/16
	"D" EQUAL SPACES	5	5	5	5	5
	NO. OF PILES PER ABUT.	8	8	8	8	8
	PU, STRENGTH I DESIGN LOAD (KIPS)	118	122	130	135	139

NOTE: Pu, STRENGTH I DESIGN LOAD (KIPS) IS NOT THE VALUE USED IN THE FIELD FOR DRIVING PILES.
NOTE: THE PILE TYPE AND NUMBER OF PILES ARE TO BE INCLUDED ON THE SUMMARY QUANTITIES SHEET IN THE PLAN.

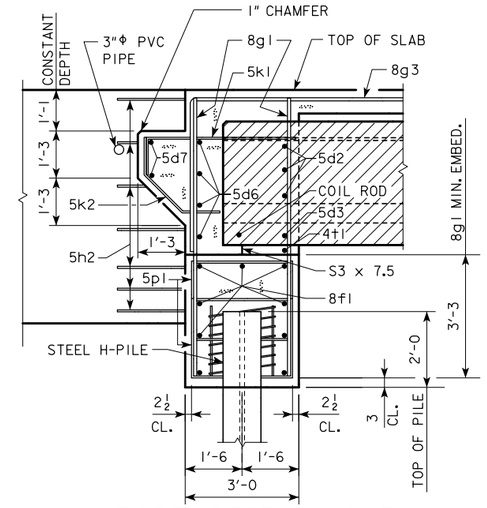

PART SECTION B-B

(FOR STEEL H-PILING)

NOTE:
THE SPIRAL AT THE TOP OF EACH PILE TO BE 7 TURNS OF NO. 2 BAR, 21" DIAMETER, 3" PITCH WITH 3 - L 7/8 x 7/8 x 1/8 SPACERS PUNCHED TO HOLD SPIRAL.

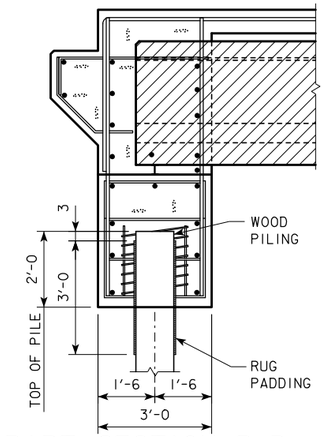

PART SECTION B-B

(FOR WOOD PILING)

WOOD PILING NOTE:

AFTER PILES ARE CUT OFF, THE UPPER 3', EXCEPT AS SHOWN, IS TO BE WRAPPED WITH A DOUBLE THICKNESS OF RUG PADDING HELD IN PLACE BY TACKING WITH GALVANIZED ROOFING NAILS AND WRAPPED WITH #14 GAUGE GALVANIZED WIRE AT A 4" PITCH, CARE IS TO BE TAKEN NOT TO DAMAGE PADDING WHEN PLACING CONCRETE. RUG PADDING MAY BE EITHER OF THE FOLLOWING:
(1) HAIR AND JUTE RUG PADDING, RUBBERIZED ON BOTH SIDES, AND WEIGHING NOT LESS THAN 47 OZ. PER SQ. YD.
(2) BONDED URETHANE OR BONDED POLYFOAM WITH A MINIMUM DENSITY OF 5 LBS. PER CU. FT. AND SHALL BE AT LEAST 1/2 IN. THICK, (MATERIAL LESS THAN 1/2 IN. IN THICKNESS MAY BE USED, BUT WILL REQUIRE ADDITIONAL WRAPS FOR A TOTAL OF AT LEAST ONE INCH).

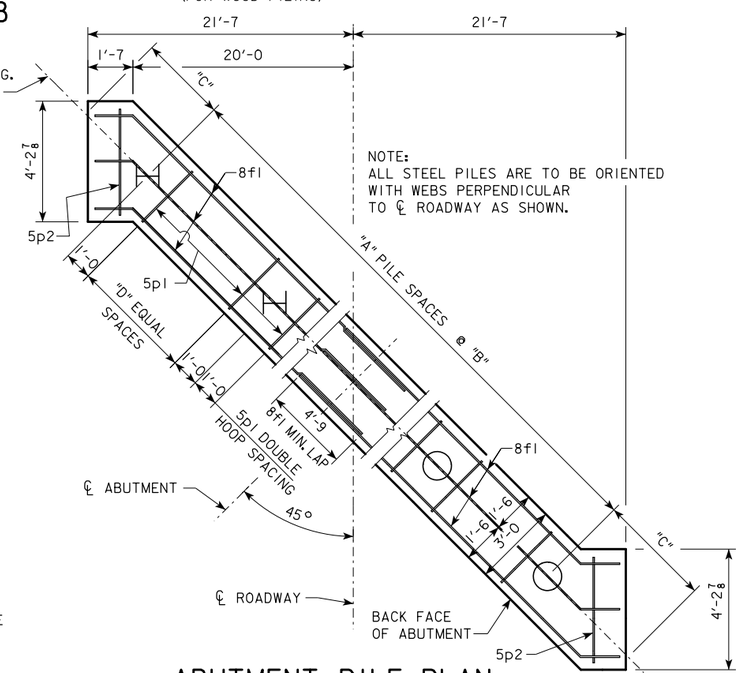

NOTE:
ALL STEEL PILES ARE TO BE ORIENTED WITH WEBS PERPENDICULAR TO ℄ ROADWAY AS SHOWN.

ABUTMENT PILE PLAN

ABUTMENT NOTES:

MINIMUM CLEAR DISTANCE FROM FACE OF CONCRETE TO NEAR REINFORCING BAR IS TO BE 2" UNLESS OTHERWISE NOTED OR SHOWN.

IF NECESSARY TO PREVENT DAMAGE TO THE END OF THE BRIDGE DECK OR BACKWALL FROM CONSTRUCTION EQUIPMENT, AN APPROPRIATE METHOD OF PROTECTION APPROVED BY THE ENGINEER SHALL BE PROVIDED BY THE BRIDGE CONTRACTOR AT NO EXTRA COST TO THE COUNTY OR STATE.

ABUTMENT PILES SHALL BE DRIVEN TO VALUES SHOWN IN DESIGN PLANS.

PLACE 5h2 BAR AT 1:6 SLOPE TO MATCH TRAFFIC SIDE OF ABUTMENT WING FACE. (BOTH SIDES TYPICAL)

BARRIER RAIL NOT SHOWN IN DETAILS.

IF ROCK IS CLOSER THAN 15' BELOW ABUTMENT FOOTING, SPECIAL ANALYSIS MAY BE REQUIRED.

LATEST REVISION DATE

APPROVED BY BRIDGE ENGINEER

IOWA DOT Highway Division

STANDARD DESIGN - 40' ROADWAY, THREE SPAN BRIDGE

PRETENSIONED PRESTRESSED CONCRETE BEAM BRIDGES

SEPTEMBER, 2014

ABUTMENT DETAILS

45° SKEW A & B BEAMS

H40-25-14

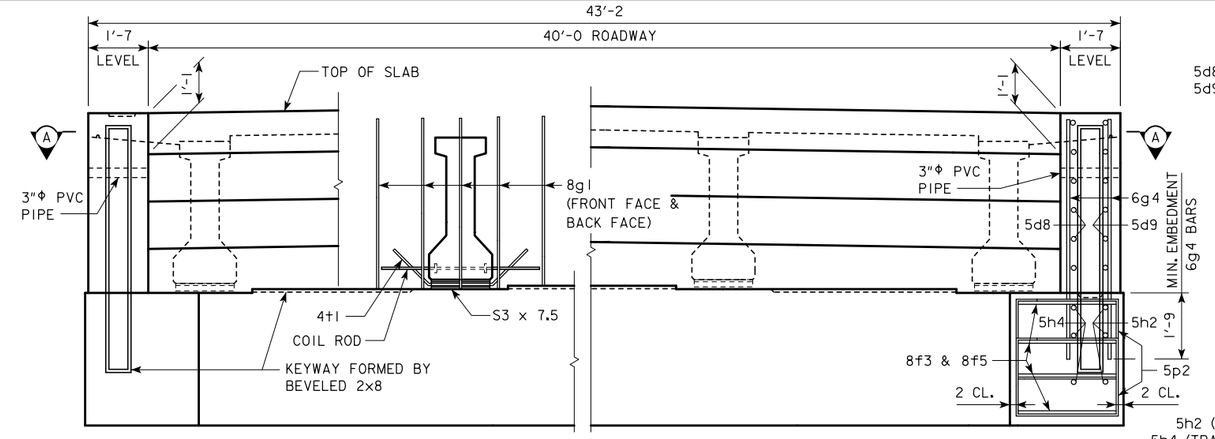

PART REAR ELEVATION AT ABUTMENT

NOTE: TOP OF ABUTMENT SHOWN FOR SOLID BARRIER RAIL

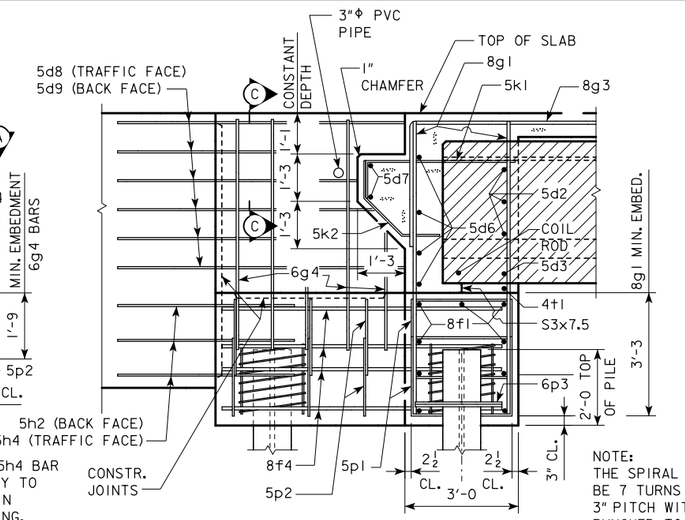

FIELD BEND 5h4 BAR AS NECESSARY TO AVOID PILE IN ABUTMENT WING.

PART SECTION B-B

NOTE:
THE SPIRAL AT THE TOP OF EACH PILE TO BE 7 TURNS OF NO. 2 BAR, 21" DIAMETER, 3" PITCH WITH 3 - $L\frac{7}{8} \times \frac{7}{8} \times \frac{1}{8}$ SPACERS PUNCHED TO HOLD SPIRAL.

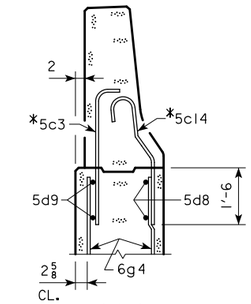

PART SECTION C-C

* NOTE: SEE BARRIER RAIL SHEET FOR DETAILS. REINFORCING BARS 5c3 AND 5c14 ARE INCLUDED IN BARRIER RAIL QUANTITIES.

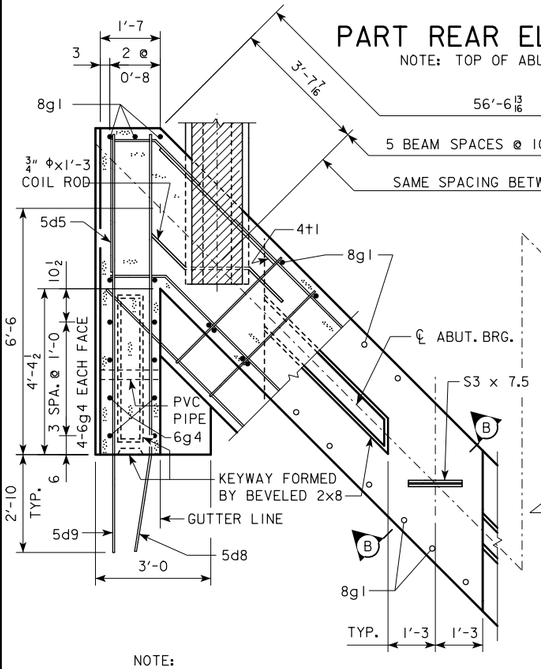

NOTE:
SHIFT 8g1 BARS IN F.F. AS NECESSARY TO MISS BEAMS. PLACE 8g3 BARS PARALLEL TO LONGIT. STEEL.

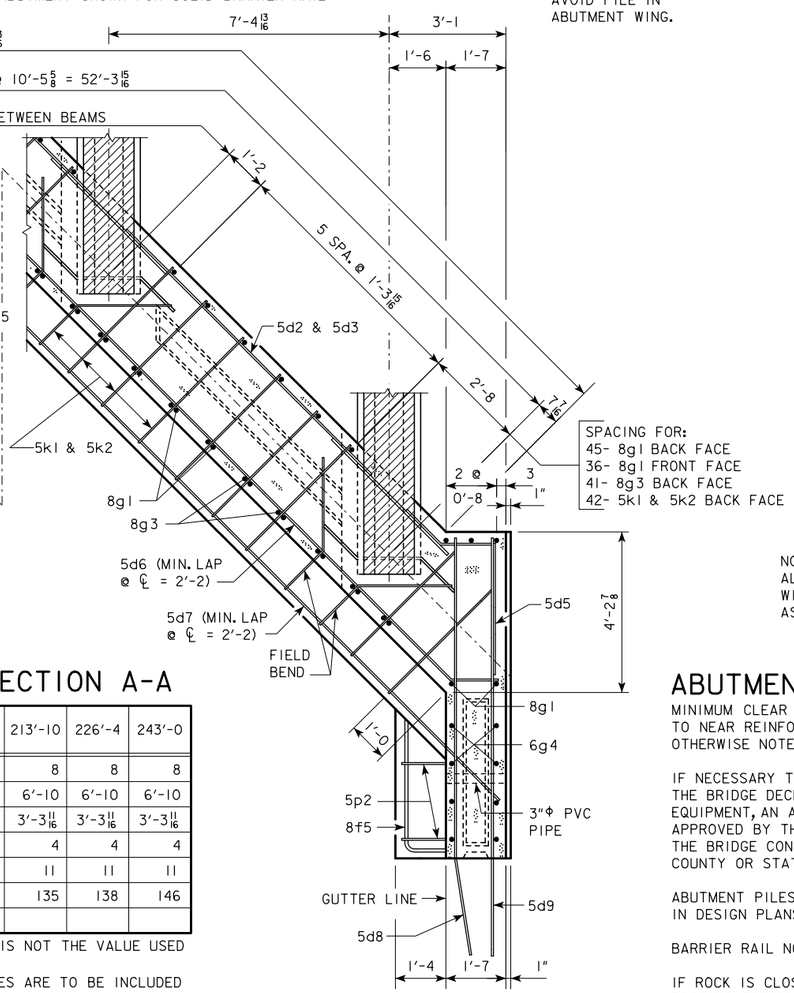

PART SECTION A-A

ABUTMENT PILE SPACING		℄-℄ ABUT. BRG.	201'-4	213'-10	226'-4	243'-0
WITH STEEL H-PILES	"A" PILE SPACES		8	8	8	8
	"B" (FT. - IN.)		6'-10	6'-10	6'-10	6'-10
	"C" (FT. - IN.)		3'-3 11/16	3'-3 11/16	3'-3 11/16	3'-3 11/16
	"D" EQUAL SPACES		4	4	4	4
	NO. OF PILES PER ABUT.		11	11	11	11
	PU, STRENGTH I DESIGN LOAD (KIPS)		131	135	138	146

NOTE: Pu, STRENGTH I DESIGN LOAD (KIPS) IS NOT THE VALUE USED IN THE FIELD FOR DRIVING PILES.

NOTE: THE PILE TYPE AND NUMBER OF PILES ARE TO BE INCLUDED ON THE SUMMARY QUANTITIES SHEET IN THE PLAN.

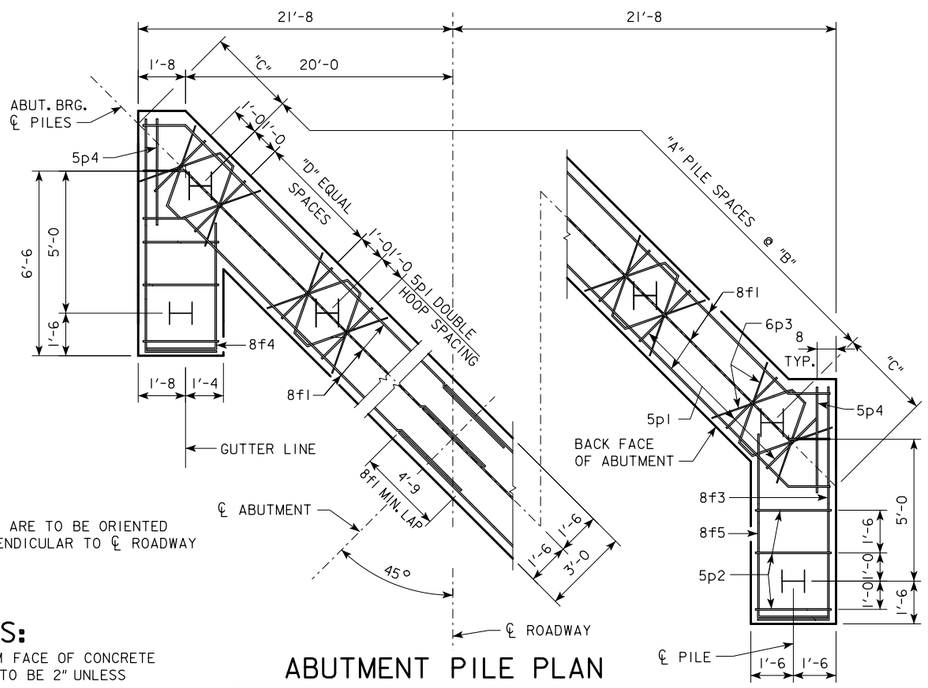

NOTE:
ALL STEEL PILES ARE TO BE ORIENTED WITH WEBS PERPENDICULAR TO ℄ ROADWAY AS SHOWN.

ABUTMENT PILE PLAN

ABUTMENT NOTES:

MINIMUM CLEAR DISTANCE FROM FACE OF CONCRETE TO NEAR REINFORCING BAR IS TO BE 2" UNLESS OTHERWISE NOTED OR SHOWN.

IF NECESSARY TO PREVENT DAMAGE TO THE END OF THE BRIDGE DECK OR BACKWALL FROM CONSTRUCTION EQUIPMENT, AN APPROPRIATE METHOD OF PROTECTION APPROVED BY THE ENGINEER SHALL BE PROVIDED BY THE BRIDGE CONTRACTOR AT NO EXTRA COST TO THE COUNTY OR STATE.

ABUTMENT PILES SHALL BE DRIVEN TO VALUES SHOWN IN DESIGN PLANS.

BARRIER RAIL NOT SHOWN IN DETAILS.

IF ROCK IS CLOSER THAN 15' BELOW ABUTMENT FOOTING, SPECIAL ANALYSIS MAY BE REQUIRED.

LATEST REVISION DATE

APPROVED BY BRIDGE ENGINEER

IOWA DOT Highway Division

STANDARD DESIGN - 40' ROADWAY, THREE SPAN BRIDGE

PRETENSIONED PRESTRESSED CONCRETE BEAM BRIDGES

SEPTEMBER, 2014

ABUTMENT DETAILS

45° SKEW C BEAMS

H40-26-14

NOTE: BRIDGE IS SYMMETRICAL ABOUT ℄

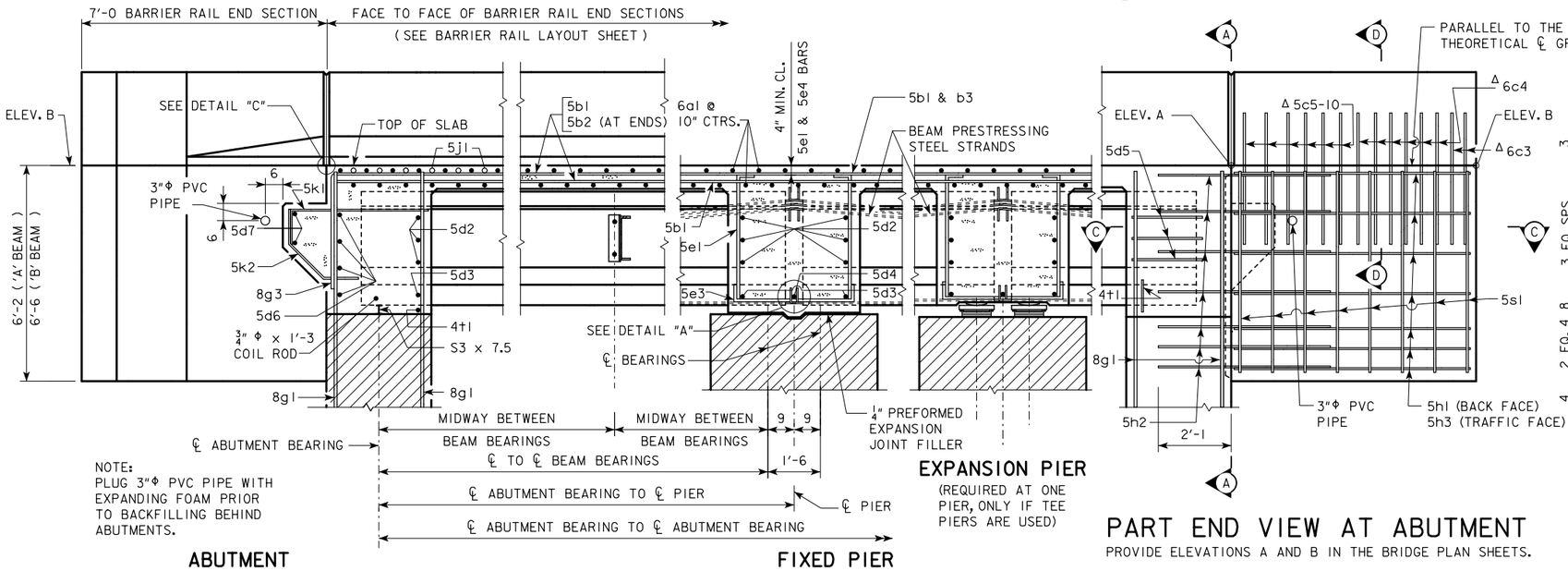

PART LONGITUDINAL SECTION NEAR GUTTER

(FOR DETAILS OF INTERMEDIATE DIAPHRAGM SEE SHEET H40-38-14)

PART END VIEW AT ABUTMENT

PROVIDE ELEVATIONS A AND B IN THE BRIDGE PLAN SHEETS.

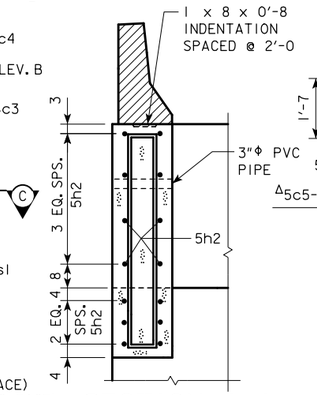

SECTION A-A

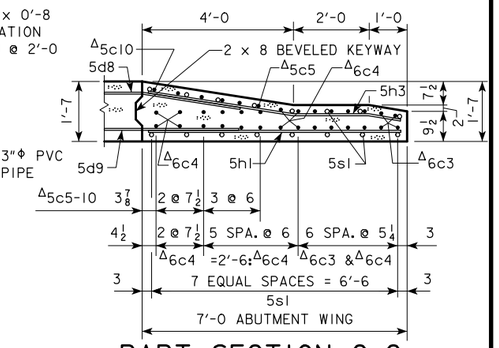

PART SECTION C-C

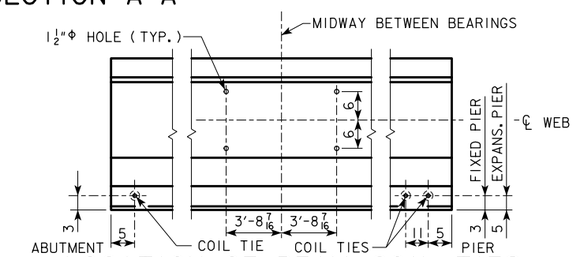

LOCATION OF BEAM COIL TIES AND STEEL DIAPHRAGM BOLT HOLES

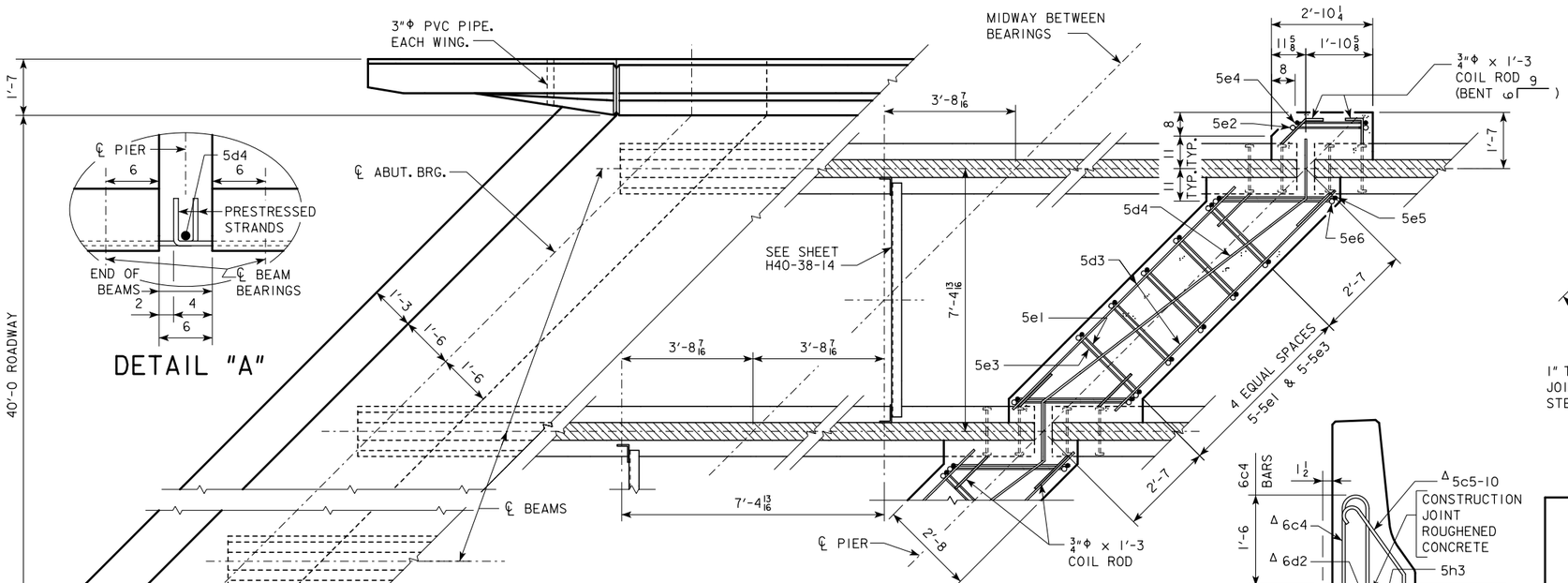

DETAIL "A"

PART SECTION AT PIER

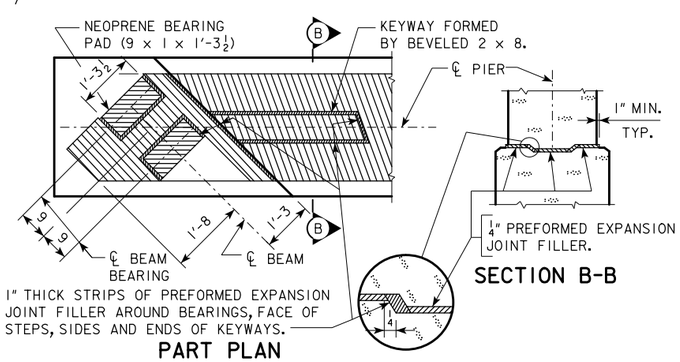

SECTION B-B

PART PLAN

TOP OF FIXED PIER DETAILS

(SEE SHEET H40-44-14 FOR EXPANSION PIER BEARING DETAILS)

PART PLAN

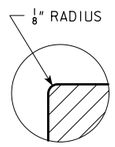

DETAIL "C"

Δ NOTE:
SEE END SECTION DETAILS IN THESE PLANS FOR DETAILS OF BARRIER RAIL END SECTION. REINFORCING BARS 6c3, 6c4, 5c5-10, 6d2 & 4t1 ARE INCLUDED IN THE BARRIER RAIL QUANTITIES.

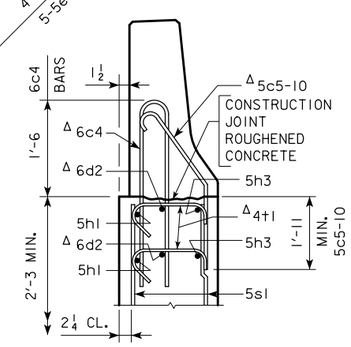

SECTION D-D

LATEST REVISION DATE

APPROVED BY BRIDGE ENGINEER

IOWA DOT Highway Division

STANDARD DESIGN - 40' ROADWAY, THREE SPAN BRIDGE

PRETENSIONED PRESTRESSED CONCRETE BEAM BRIDGES

SEPTEMBER, 2014

LONGITUDINAL SECTION

45° SKEW A & B BEAMS

H40-27-14

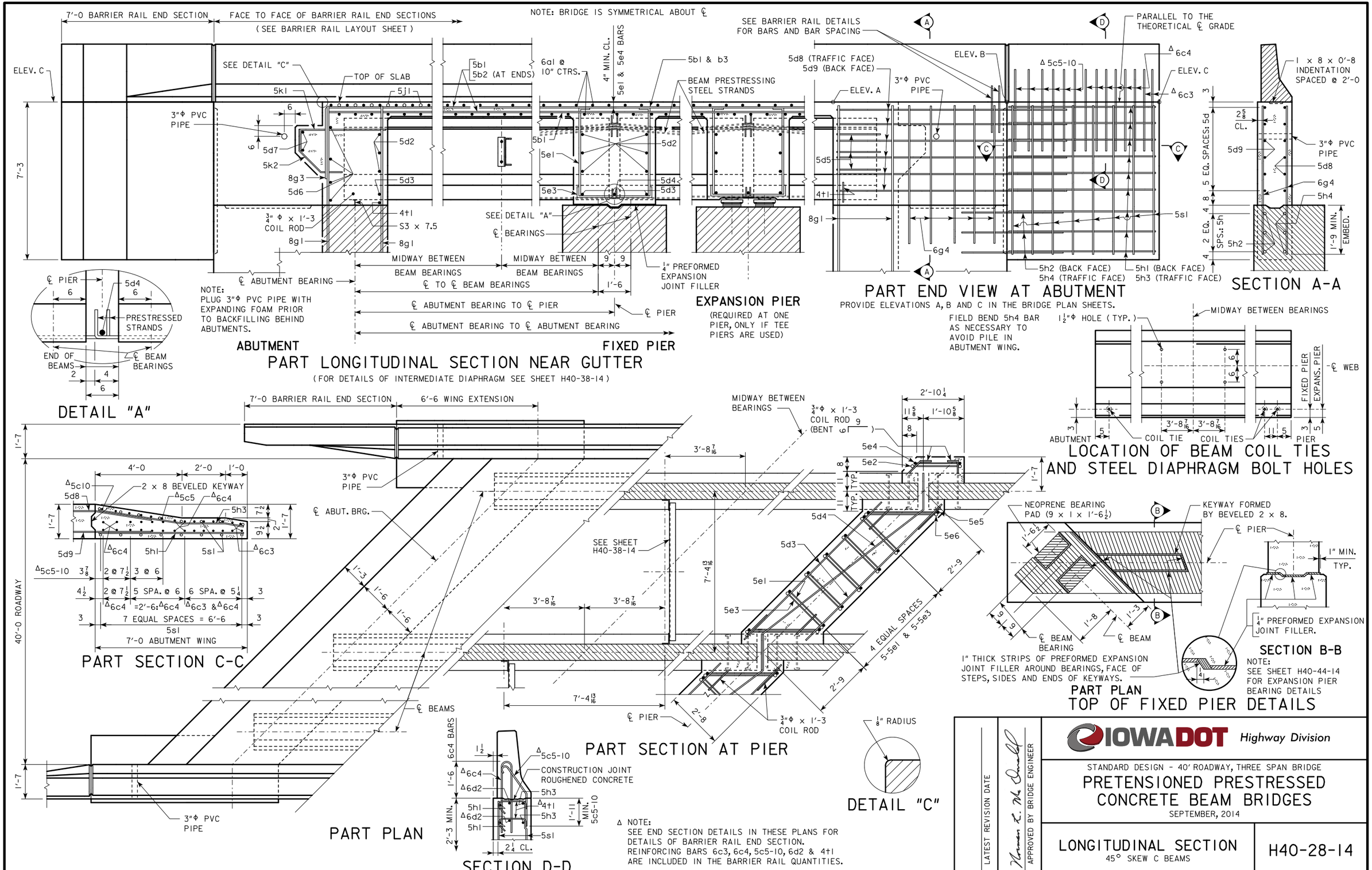
7'-0 BARRIER RAIL END SECTION
FACE TO FACE OF BARRIER RAIL END SECTIONS
(SEE BARRIER RAIL LAYOUT SHEET)
NOTE: BRIDGE IS SYMMETRICAL ABOUT ℄
ELEV. C
SEE DETAIL "C"
TOP OF SLAB
3"Φ PVC PIPE
5k1
5j1
5d7
5k2
8g3
5d6
5d2
5d3
4t1
S3 x 7.5
8g1
3/4" Φ x 1'-3 COIL ROD
5b1
5b2 (AT ENDS)
6a1 @ 10" CTRS.
4" MIN. CL.
5e1 & 5e4 BARS
5b1 & b3
BEAM PRESTRESSING STEEL STRANDS
5e1
5e3
5d4
SEE DETAIL "A"
℄ BEARINGS
1/4" PREFORMED EXPANSION JOINT FILLER
7'-3
℄ ABUTMENT BEARING
MIDWAY BETWEEN BEAM BEARINGS
℄ TO ℄ BEAM BEARINGS
℄ ABUTMENT BEARING TO ℄ PIER
℄ ABUTMENT BEARING TO ℄ ABUTMENT BEARING
1'-6
℄ PIER
NOTE: PLUG 3"Φ PVC PIPE WITH EXPANDING FOAM PRIOR TO BACKFILLING BEHIND ABUTMENTS.
ABUTMENT
FIXED PIER
PART LONGITUDINAL SECTION NEAR GUTTER
(FOR DETAILS OF INTERMEDIATE DIAPHRAGM SEE SHEET H40-38-14)
EXPANSION PIER
(REQUIRED AT ONE PIER, ONLY IF TEE PIERS ARE USED)
SEE BARRIER RAIL DETAILS FOR BARS AND BAR SPACING
5d8 (TRAFFIC FACE)
5d9 (BACK FACE)
3"Φ PVC PIPE
ELEV. A
ELEV. B
5c5-10
6c4
6c3
PARALLEL TO THE THEORETICAL ℄ GRADE
5d5
4t1
8g1
6g4
5s1
5h2 (BACK FACE)
5h4 (TRAFFIC FACE)
5h1 (BACK FACE)
5h3 (TRAFFIC FACE)
PART END VIEW AT ABUTMENT
PROVIDE ELEVATIONS A, B AND C IN THE BRIDGE PLAN SHEETS.
FIELD BEND 5h4 BAR AS NECESSARY TO AVOID PILE IN ABUTMENT WING.
1 x 8 x 0'-8 INDENTATION SPACED @ 2'-0
2 5/8 CL.
5d9
3"Φ PVC PIPE
5d8
6g4
5h4
5h2
5 EQ. SPACES; 5d
2 EQ. SPS.; 5h
1'-9 MIN. EMBED.
SECTION A-A
℄ PIER
5d4
PRESTRESSED STRANDS
END OF BEAMS
℄ BEAM BEARINGS
DETAIL "A"
MIDWAY BETWEEN BEARINGS
1 1/2"Φ HOLE (TYP.)
℄ WEB
FIXED PIER
EXPANS. PIER
ABUTMENT
COIL TIE
COIL TIES
PIER
LOCATION OF BEAM COIL TIES AND STEEL DIAPHRAGM BOLT HOLES
7'-0 BARRIER RAIL END SECTION
6'-6 WING EXTENSION
1'-7
40'-0 ROADWAY
4'-0
2'-0
1'-0
2 x 8 BEVELED KEYWAY
5c10
5d8
5c5
6c4
5h3
5d9
5h1
5s1
6c3
5c5-10
2 @ 7 1/2
3 @ 6
5 SPA. @ 6
6 SPA. @ 5 1/4
=2'-6: 6c4 6c3 & 6c4
7 EQUAL SPACES = 6'-6
5s1
7'-0 ABUTMENT WING
PART SECTION C-C
3"Φ PVC PIPE
℄ ABUT. BRG.
SEE SHEET H40-38-14
℄ BEAMS
℄ PIER
3/4" x 1'-3 COIL ROD (BENT 9)
2'-10 1/4
11 5/8
1'-10 5/8
5e4
5e2
5e5
5e6
5d4
5d3
5e1
5e3
7'-4 13/16
3'-8 7/16
2'-9
4 EQUAL SPACES 5-5e1 & 5-5e3
2'-8
3/4" x 1'-3 COIL ROD
PART SECTION AT PIER
NEOPRENE BEARING PAD (9 x 1 x 1'-6 1/2)
KEYWAY FORMED BY BEVELED 2 x 8.
℄ PIER
1" MIN. TYP.
1/4" PREFORMED EXPANSION JOINT FILLER.
℄ BEAM BEARING
℄ BEAM
1" THICK STRIPS OF PREFORMED EXPANSION JOINT FILLER AROUND BEARINGS, FACE OF STEPS, SIDES AND ENDS OF KEYWAYS.
SECTION B-B
NOTE: SEE SHEET H40-44-14 FOR EXPANSION PIER BEARING DETAILS
PART PLAN
TOP OF FIXED PIER DETAILS
1/8" RADIUS
DETAIL "C"
6c4 BARS
5c5-10
CONSTRUCTION JOINT ROUGHENED CONCRETE
6d2
4t1
5h1
5s1
2 1/4 CL.
2'-3 MIN.
1'-11 MIN. 5c5-10
SECTION D-D
PART PLAN
Δ NOTE: SEE END SECTION DETAILS IN THESE PLANS FOR DETAILS OF BARRIER RAIL END SECTION. REINFORCING BARS 6c3, 6c4, 5c5-10, 6d2 & 4t1 ARE INCLUDED IN THE BARRIER RAIL QUANTITIES.
LATEST REVISION DATE
APPROVED BY BRIDGE ENGINEER
IOWA DOT Highway Division
STANDARD DESIGN - 40' ROADWAY, THREE SPAN BRIDGE
PRETENSIONED PRESTRESSED CONCRETE BEAM BRIDGES
SEPTEMBER, 2014
LONGITUDINAL SECTION
45° SKEW C BEAMS
H40-28-14

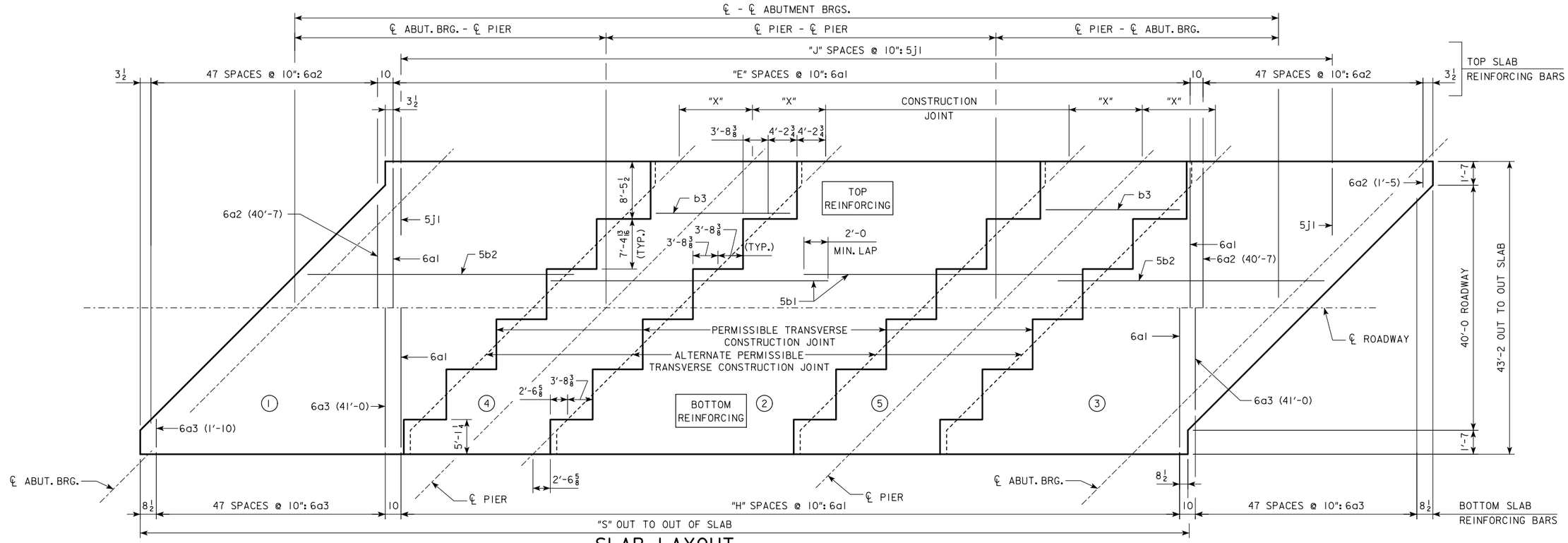

SLAB LAYOUT

(LEFT AHEAD SKEW SHOWN, RIGHT AHEAD SKEW SIMILAR)

ESTIMATED QUANTITIES
(SUPERSTRUCTURE PLUS INTEGRAL ABUTMENTS)

	℄-℄ ABUT. BRG.	138'-10	151'-4	163'-10	176'-4	188'-10	201'-4	213'-10	226'-4	243'-0
PRETENSIONED PRESTRESSED CONCRETE BEAM, CENTER SPAN	NO.	6-A50	6-A55	6-B59	6-B63	6-B67	6-C71	6-C75	6-C80	6-C80
PRETENSIONED PRESTRESSED CONCRETE BEAM, END SPAN	NO.	12-A42	12-A46	12-B50	12-B55	12-B59	12-C63	12-C67	12-C71	12-C80
CONCRETE RAIL (BARRIER OR OPEN)	L.F.	314.2	339.2	364.2	389.2	414.2	456.7	481.7	506.7	540.0
NO. OF WOOD PILES, TREATED FOR TWO ABUTMENTS	NO.	30	32	34	36	36	-----	-----	-----	-----
NO. OF STEEL H-PILES FOR TWO ABUTMENTS (HP 10 x 57)	NO.	16	16	16	16	16	22	22	22	22
PREBORED HOLES (w/ WOOD PILES)	L.F.	300	320	340	360	360	-----	-----	-----	-----
PREBORED HOLES (w/ STEEL H-PILES)	L.F.	160	160	160	160	160	220	220	220	220
WING ARMORING	S.Y.	3.7	3.7	3.7	3.7	3.7	5.9	5.9	5.9	5.9

NOTE:
FOR QUANTITIES OF STRUCTURAL CONCRETE, REINFORCING STEEL AND STRUCTURAL STEEL, REFER TO THE SUMMARY QUANTITIES SHEET IN THE BRIDGE PLANS.

Δ NOTE:
CONCRETE QUANTITIES SHALL BE LISTED ON THE SUMMARY QUANTITIES SHEET.

Δ CONCRETE PLACEMENT QUANT.
(SUPERSTRUCTURE PLUS INTEGRAL ABUTMENTS)

		℄-℄ ABUT. BRG.	138'-10	151'-4	163'-10	176'-4	188'-10	201'-4	213'-10	226'-4	243'-0
SLAB INCLUDING HAUNCH, ABUT. DIAPHRAGM, & WINGWALLS** , SECTIONS 1 & 3	WITH BARRIER RAIL	C.Y.	133.8	141.8	157.2	165.4	173.4	191.8	200.2	208.8	228.0
	WITH OPEN RAIL	C.Y.	135.1	143.2	158.8	167.1	175.2	193.7	202.2	210.9	230.4
SLAB INCLUDING HAUNCH, SECTION 2	WITH BARRIER RAIL	C.Y.	43.5	47.0	50.5	54.0	57.3	61.1	64.6	68.1	68.1
	WITH OPEN RAIL	C.Y.	44.2	47.8	51.3	54.9	58.3	62.1	65.6	69.2	69.2
SLAB INCLUDING HAUNCH & PIER DIAPHRAGM, SECTIONS 4 & 5	WITH BARRIER RAIL	C.Y.	57.8	60.2	68.0	70.4	73.4	78.8	81.0	83.6	83.6
	WITH OPEN RAIL	C.Y.	58.3	60.7	68.6	71.0	74.0	79.4	81.7	84.3	84.3
ABUTMENT WINGS		C.Y.	7.2	7.2	7.6	7.6	7.6	8.4	8.4	8.4	8.4
ABUTMENT FOOTINGS (w/ WOOD PILES) ***		C.Y.	48.5	48.3	48.2	48.1	48.1	-----	-----	-----	-----
ABUTMENT FOOTINGS (w/ STEEL H PILES) ***		C.Y.	50.2	50.2	50.2	50.2	50.2	57.4	57.4	57.4	57.4

GENERAL DATA

			℄-℄ ABUT. BRG.	138'-10	151'-4	163'-10	176'-4	188'-10	201'-4	213'-10	226'-4	243'-0
VERTICAL	TOP OF SLAB TO ABUT. CONSTR. JT. AT C.L. ABUT. BRG.	"U"	3'-8	3'-7 13/16	4'-2 7/8	4'-2 13/16	4'-2 7/8	4'-8 9/16	4'-8 11/16	4'-9 1/8	4'-9 7/16
CURVE	TOP OF SLAB TO PIER TOP AT C.L. PIER*	"U"	3'-6 3/8	3'-6 9/16	4'-1 5/16	4'-1 1/2	4'-1 7/8	4'-7 5/16	4'-7 1/4	4'-7 1/2	4'-7 1/2
STRAIGHT	TOP OF SLAB TO ABUT. CONSTR. JT. AT C.L. ABUT. BRG.	"U"	3'-8 1/16	3'-7 7/8	4'-2 15/16	4'-2 15/16	4'-3	4'-8 3/4	4'-8 7/8	4'-9 5/16	4'-9 7/8
GRADE	TOP OF SLAB TO PIER TOP AT C.L. PIER*	"U"	3'-6 9/16	3'-6 3/4	4'-1 9/16	4'-1 13/16	4'-2 1/4	4'-7 11/16	4'-7 11/16	4'-8	4'-8
D.L. PIER REACTION (D.L. + F.W.S.) SERVICE LOADS		KIPS	456.2	490.9	561.4	598.1	635.1	756.6	797.7	839.3	879.7
L.L. PIER REACTION (HL93) NO IMPACT SERVICE LOADS		KIPS	264.7	274.5	283.9	293.1	302.2	311.0	322.9	341.9	362.6
NO. OF SPACES FOR 6a1 BARS (TOP)		"E"	123	138	153	168	183	198	213	228	248
NO. OF SPACES FOR 6a1 BARS (BOTTOM)		"H"	122	137	152	167	182	197	212	227	247
NO. OF SPACES FOR 5j1 BARS (TOP)		"J"	164	179	194	209	224	239	254	269	289
OUT TO OUT OF SLAB		"S"	143'-0 7/8	155'-6 7/8	168'-0 7/8	180'-6 7/8	193'-0 7/8	205'-6 7/8	218'-0 7/8	230'-6 7/8	247'-2 7/8
SLAB TRANSVERSE CONSTR. JT. DISTANCE FROM C.L. PIER		"X"	6'-7	7'-1	7'-7	8'-1	8'-8	9'-2	9'-8	10'-2	10'-2

NOTE: CONCRETE DECK SHALL BE PLACED IN SECTIONS AND SEQUENCES INDICATED. ALTERNATE PROCEDURES FOR PLACING DECK CONCRETE MAY BE SUBMITTED FOR APPROVAL TOGETHER WITH A STATEMENT OF THE PROPOSED METHOD AND EVIDENCE THAT THE CONTRACTOR POSSESSES THE NECESSARY EQUIPMENT AND FACILITIES TO ACCOMPLISH THE REQUIRED RESULTS. FOR APPROVED ALTERNATE PROCEDURES THE ENGINEER SHALL DETERMINE IF A RETARDING ADMIXTURE IS REQUIRED TO MAINTAIN PLASTICITY OF THE CONCRETE DECK DURING PLACEMENT.

* VALUES SHOWN ARE FOR FIXED PIERS ONLY AND ALLOW FOR 1/16 INCH DEFLECTION OF THE 1 INCH NEOPRENE BEARING PAD. AT EXPANSION PIER LOCATIONS ADD 3 1/16 INCHES TO "U" VALUES SHOWN.

** WINGWALLS APPLY ONLY TO BRIDGES USING "C" BEAMS.

07-15
LATEST REVISION DATE

APPROVED BY BRIDGE ENGINEER

IOWA DOT Highway Division

STANDARD DESIGN - 40' ROADWAY, THREE SPAN BRIDGE

PRETENSIONED PRESTRESSED CONCRETE BEAM BRIDGES

SEPTEMBER, 2014

SUPERSTRUCTURE DETAILS
45° SKEW

H40-29-14

REVISED 07-2015 - CHANGED CONCRETE PLACEMENT NOTE TO ACCOUNT FOR THE POSSIBLE ADDITION OF A RETARDING ADMIXTURE TO THE CONCRETE.

REINFORCING BAR LIST

ONE SUPERSTRUCTURE AND TWO ABUTMENTS

EPOXY COATED REINFORCING

	℄-℄ ABUT. BRG.	138'-10			151'-4			163'-10			176'-4			188'-10			201'-4			213'-10			226'-4			243'-0		
	℄-℄ BEAM BRG.	42'-6	50'-10	42'-6	46'-8	55'-0	46'-8	50'-10	59'-2	50'-10	55'-0	63'-4	55'-0	59'-2	67'-6	59'-2	63'-4	71'-8	63'-4	67'-6	75'-10	67'-6	71'-8	80'-0	71'-8	80'-0	80'-0	80'-0
	BEAM SERIES	A BEAM			A BEAM			B BEAM			B BEAM			B BEAM			C BEAM			C BEAM			C BEAM			C BEAM		
BAR	LOCATION	SHAPE	NO.	LENGTH	WEIGHT	NO.	LENGTH	WEIGHT	NO.	LENGTH	WEIGHT	NO.	LENGTH	WEIGHT	NO.	LENGTH	WEIGHT	NO.	LENGTH	WEIGHT	NO.	LENGTH	WEIGHT	NO.	LENGTH	WEIGHT	NO.	LENGTH	WEIGHT
6a1	SLAB TRANSV. TOP & BOTT.		247	42'-10	15,891	277	42'-10	17,821	307	42'-10	19,751	337	42'-10	21,681	367	42'-10	23,611	397	42'-10	25,541	427	42'-10	27,471	457	42'-10	29,401	497	42'-10	31,975
6a2	SLAB TRANSV. TOP ENDS		96	VARIES	3,028	96	VARIES	3,028	96	VARIES	3,028	96	VARIES	3,028	96	VARIES	3,028	96	VARIES	3,028	96	VARIES	3,028	96	VARIES	3,028	96	VARIES	3,028
6a3	SLAB TRANSV. BOTT. ENDS		96	VARIES	3,088	96	VARIES	3,088	96	VARIES	3,088	96	VARIES	3,088	96	VARIES	3,088	96	VARIES	3,088	96	VARIES	3,088	96	VARIES	3,088	96	VARIES	3,088
5b1	SLAB LONGITUDINAL, TOP & BOTT.		202	40'-0	8,427	303	40'-0	12,641	303	40'-0	12,641	303	40'-0	12,641	404	40'-0	16,855	404	40'-0	16,855	404	40'-0	16,855	505	40'-0	21,069	505	40'-0	21,069
5b2	SLAB LONGITUDINAL, TOP & BOTT., ENDS		202	34'-5	7,251	202	21'-8	4,565	202	27'-11	5,882	202	34'-2	7,198	202	21'-5	4,512	202	27'-8	5,829	202	33'-11	7,146	202	21'-2	4,460	202	29'-6	6,215
6b3	SLAB LONGITUDINAL, TOP @ PIERS		92	12'-10	1,773	92	13'-10	1,912	92	14'-10	2,050	—	—	—	—	—	—	—	—	—	—	—	—	—	—	—	—	—	—
7b3	SLAB LONGITUDINAL, TOP @ PIERS		—	—	—	—	—	—	—	—	—	92	15'-10	2,977	92	17'-0	3,197	92	18'-0	3,385	—	—	—	—	—	—	—	—	—
8b3	SLAB LONGITUDINAL, TOP @ PIERS		—	—	—	—	—	—	—	—	—	—	—	—	—	—	—	—	—	—	92	19'-0	4,667	92	20'-0	4,913	92	20'-0	4,913
5d1	PIER DIAPH. ENDS		12	3'-10	48	12	3'-10	48	12	3'-10	48	12	3'-10	48	12	3'-10	48	12	3'-10	48	12	3'-10	48	12	3'-10	48	12	3'-10	48
5d2	PIER & ABUT. DIAPH. LONGIT.		90	9'-1	853	90	9'-1	853	90	9'-1	853	90	9'-1	853	90	9'-1	853	90	8'-10	829	90	8'-10	829	90	8'-10	829	90	8'-10	829
5d3	PIER & ABUT. DIAPH. LONGIT.		30	8'-2	256	30	8'-2	256	30	8'-2	256	30	8'-2	256	30	8'-2	256	30	7'-10	245	30	7'-10	245	30	7'-10	245	30	7'-10	245
5d4	PIER DIAPH. LONGIT.		10	12'-11	135	10	12'-11	135	10	12'-11	135	10	12'-11	135	10	12'-11	135	10	12'-11	135	10	12'-11	135	10	12'-11	135	10	12'-11	135
5d5	ABUT. DIAPH. ENDS		12	6'-5	80	12	6'-5	80	12	6'-5	80	12	6'-5	80	12	6'-5	80	12	6'-5	80	12	6'-5	80	12	6'-5	80	12	6'-5	80
5d6	ABUT. DIAPH. LONGIT. B.F.		16	30'-10	515	16	30'-10	515	16	30'-10	515	16	30'-10	515	16	30'-10	515	16	30'-10	515	16	30'-10	515	16	30'-10	515	16	30'-10	515
5d7	PAVING NOTCH LONGIT.		8	31'-0	259	8	31'-0	259	8	31'-0	259	8	31'-0	259	8	31'-0	259	8	31'-0	259	8	31'-0	259	8	31'-0	259	8	31'-0	259
5d8	ABUT. DIAPH. WING EXT. LONGIT.		—	—	—	—	—	—	—	—	—	—	—	—	—	—	—	24	11'-4	284	24	11'-4	284	24	11'-4	284	24	11'-4	284
5d9	ABUT. DIAPH. WING EXT. LONGIT.		—	—	—	—	—	—	—	—	—	—	—	—	—	—	—	24	11'-3	282	24	11'-3	282	24	11'-3	282	24	11'-3	282
5e1	PIER DIAPH. HOOPS		50	9'-1	474	50	9'-1	474	50	10'-4	539	50	10'-4	539	50	10'-4	539	50	11'-4	591	50	11'-4	591	50	11'-4	591	50	11'-4	591
5e2	PIER DIAPH. TIES ENDS		4	2'-11	12	4	2'-11	12	4	2'-11	12	4	2'-11	12	4	2'-11	12	4	2'-11	12	4	2'-11	12	4	2'-11	12	4	2'-11	12
5e3	PIER DIAPH. TIES		50	3'-5	178	50	3'-5	178	50	3'-5	178	50	3'-5	178	50	3'-5	178	50	3'-5	178	50	3'-5	178	50	3'-5	178	50	3'-5	178
5e4	PIER DIAPH. HOOPS ENDS		4	8'-7	36	4	8'-7	36	4	9'-10	41	4	9'-10	41	4	9'-10	41	4	10'-10	45	4	10'-10	45	4	10'-10	45	4	10'-10	45
5e5	PIER DIAPH. HOOPS		20	10'-0	209	20	10'-0	209	20	11'-3	235	20	11'-3	235	20	11'-3	235	20	12'-3	256	20	12'-3	256	20	12'-3	256	20	12'-3	256
5e6	PIER DIAPH. TIES		20	4'-4	90	20	4'-4	90	20	4'-4	90	20	4'-4	90	20	4'-4	90	20	4'-4	90	20	4'-4	90	20	4'-4	90	20	4'-4	90
8f1	ABUT. FOOTING LONGIT.		36	32'-1	3,084	36	32'-1	3,084	36	32'-1	3,084	36	32'-1	3,084	36	32'-1	3,084	36	32'-2	3,092	36	32'-2	3,092	36	32'-2	3,092	36	32'-2	3,092
8f3	ABUT. EXTENSION LONGIT.		—	—	—	—	—	—	—	—	—	—	—	—	—	—	—	16	10'-8	456	16	10'-8	456	16	10'-8	456	16	10'-8	456
8f4	ABUT. EXTENSION LONGIT.		—	—	—	—	—	—	—	—	—	—	—	—	—	—	—	8	7'-3	155	8	7'-3	155	8	7'-3	155	8	7'-3	155
8f5	ABUT. EXTENSION LONGIT.		—	—	—	—	—	—	—	—	—	—	—	—	—	—	—	8	9'-5	201	8	9'-5	201	8	9'-5	201	8	9'-5	201
8g1	ABUT. VERT.		166	6'-8	2,955	166	6'-8	2,955	166	7'-3	3,213	166	7'-3	3,213	166	7'-3	3,213	162	7'-9	3,352	162	7'-9	3,352	162	7'-9	3,352	162	7'-10	3,388
8g3	ABUT. DIAPH. VERT. B.F.		82	15'-3	3,339	82	15'-3	3,339	82	15'-3	3,339	82	15'-3	3,339	82	15'-3	3,339	82	15'-9	3,448	82	15'-9	3,448	82	15'-9	3,448	82	15'-9	3,448
6g4	ABUT. DIAPH. WING EXT. VERT.		—	—	—	—	—	—	—	—	—	—	—	—	—	—	—	32	6'-6	312	32	6'-6	312	32	6'-7	316	32	6'-7	316
5h1	ABUT. WING HORIZ. B.F.		28	6'-8	195	28	6'-8	195	28	6'-8	195	28	6'-8	195	28	6'-8	195	36	6'-8	250	36	6'-8	250	36	6'-8	250	36	6'-8	250
5h2	ABUT. TO WING ANCHOR		56	4'-11	287	56	4'-11	287	56	4'-11	287	56	4'-11	287	56	4'-11	287	12	4'-11	62	12	4'-11	62	12	4'-11	62	12	4'-11	62
5h3	ABUT. WING HORIZ. TRAFFIC FACE		28	6'-9	197	28	6'-9	197	28	6'-9	197	28	6'-9	197	28	6'-9	197	36	6'-9	253	36	6'-9	253	36	6'-9	253	36	6'-9	253
5h4	ABUT. TO WING ANCHOR		—	—	—	—	—	—	—	—	—	—	—	—	—	—	—	12	4'-11	62	12	4'-11	62	12	4'-11	62	12	4'-11	62
5j1	TOP OF SLAB TRANSV. (AT RAIL)		330	6'-3	2,151	360	6'-3	2,347	390	6'-3	2,542	420	6'-3	2,738	450	6'-3	2,933	480	6'-3	3,129	510	6'-3	3,325	540	6'-3	3,520	580	6'-3	3,781
5k1	PAVING NOTCH		84	4'-9	416	84	4'-9	416	84	4'-9	416	84	4'-9	416	84	4'-9	416	84	4'-9	416	84	4'-9	416	84	4'-9	416	84	4'-9	416
5k2	PAVING NOTCH		84	3'-5	299	84	3'-5	299	84	3'-5	299	84	3'-5	299	84	3'-5	299	84	3'-5	299	84	3'-5	299	84	3'-5	299	84	3'-5	299
5p1	ABUTMENT HOOPS (WOOD/STEEL)		168/168	10'-6	1840/1840	180/168	10'-6	1971/1840	192/168	10'-6	2103/1840	136/168	10'-6	1489/1840	136/168	10'-6	1489/1840	168	10'-6	1,840	168	10'-6	1,840	168	10'-6	1,840	168	10'-6	1,840
5p2	ABUTMENT HOOPS		8	12'-11	108	8	12'-11	108	8	12'-11	108	8	12'-11	108	8	12'-11	108	24	10'-8	267	24	10'-8	267	24	10'-8	267	24	10'-8	267
6p3	ABUT. BOTT. AT PILES		—	—	—	—	—	—	—	—	—	—	—	—	—	—	—	36	6'-8	360	36	6'-8	360	36	6'-8	360	36	6'-8	360
5p4	ABUT. HOOPS AT ENDS		—	—	—	—	—	—	—	—	—	—	—	—	—	—	—	8	12'-11	108	8	12'-11	108	8	12'-11	108	8	12'-11	108
5s1	WING VERT.		64	5'-10	389	64	5'-10	389	64	6'-2	412	64	6'-2	412	64	6'-2	412	64	6'-11	462	64	6'-11	462	64	6'-11	462	64	6'-11	462
4t1	UNDER BEAMS AT ABUTMENTS		12	5'-1	41	12	5'-1	41	12	5'-1	41	12	5'-1	41	12	5'-1	41	12	5'-5	43	12	5'-5	43	12	5'-5	43	12	5'-5	43
#2	PILE SPIRAL (WOOD/STEEL)*		30/16	38'-6	193/103	32/16	38'-6	206/103	34/16	38'-6	219/103	36/16	38'-6	231/103	36/16	38'-6	231/103	22	38'-6	141	22	38'-6	141	22	38'-6	141	22	38'-6	141
	SPIRAL SPACERS, L $\frac{1}{8}$×$\frac{7}{8}$×$\frac{1}{8}$× 0.70 (WOOD/STL.)*		90/48	1'-10	116/62	96/48	1'-10	123/62	102/48	1'-10	131/62	108/48	1'-10	139/62	108/48	1'-10	139/62	66	1'-10	85	66	1'-10	85	66	1'-10	85	66	1'-10	85
	*EPOXY COATING NOT REQUIRED																											
	SUB TOTAL W/ WOOD PILES**				58,213			62,157			66,267			70,042			73,915			—			—			—			—
	SUB TOTAL W/ STEEL H-PILES**				58,069			61,862			65,819			70,188			74,061			80,368			85,093			88,996			93,622
	**RAIL REINFORCING NOT INCLUDED																											

NOTE: REINFORCING STEEL QUANTITIES ARE TO BE INCLUDED ON THE SUMMARY QUANTITIES SHEET IN THE PLAN.

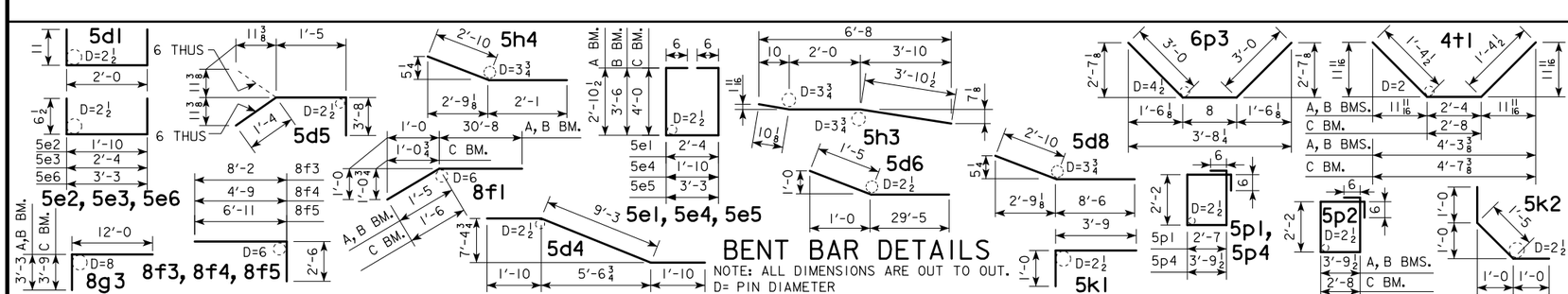

BENT BAR DETAILS

NOTE: ALL DIMENSIONS ARE OUT TO OUT.
D= PIN DIAMETER

LATEST REVISION DATE

APPROVED BY BRIDGE ENGINEER

IOWA DOT Highway Division

STANDARD DESIGN - 40' ROADWAY, THREE SPAN BRIDGE

PRETENSIONED PRESTRESSED CONCRETE BEAM BRIDGES

SEPTEMBER, 2014

DECK & ABUTMENT REINF.

45° SKEW

H40-30-14

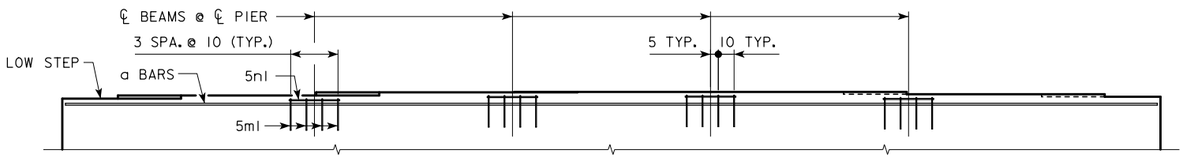

PART ELEVATION VIEW OF PIER CAP
GRADE (G): G <= 0.3%

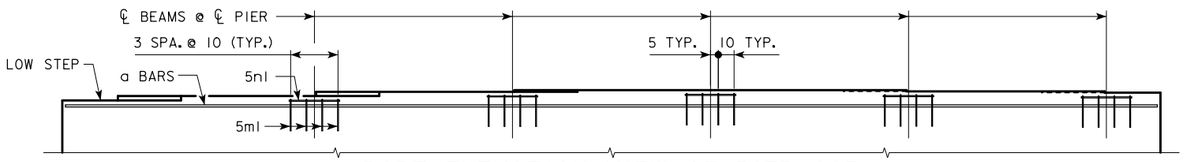

PART ELEVATION VIEW OF PIER CAP
GRADE (G): 0.3% < G <= 0.9%

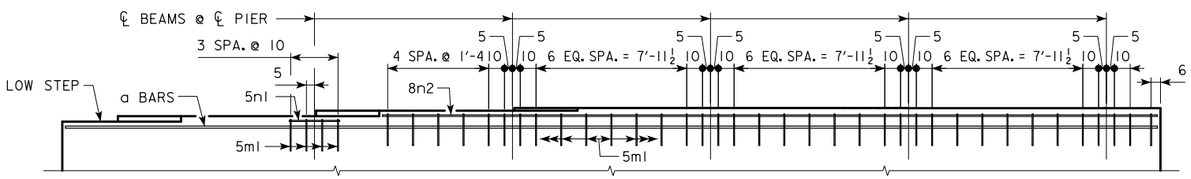

PART ELEVATION VIEW OF PIER CAP
GRADE (G): 0.9% < G <= 1.9%

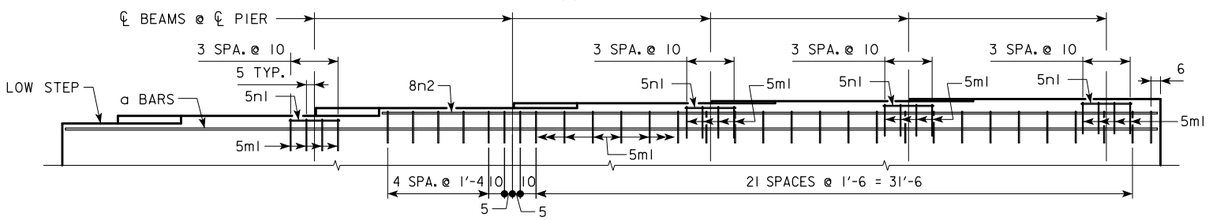

PART ELEVATION VIEW OF PIER CAP
GRADE (G): 1.9% < G <= 3.5%

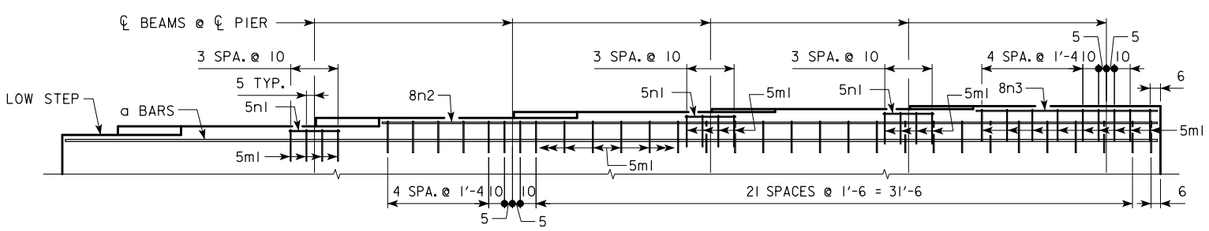

PART ELEVATION VIEW OF PIER CAP
GRADE (G): 3.5% < G <= 4.3%

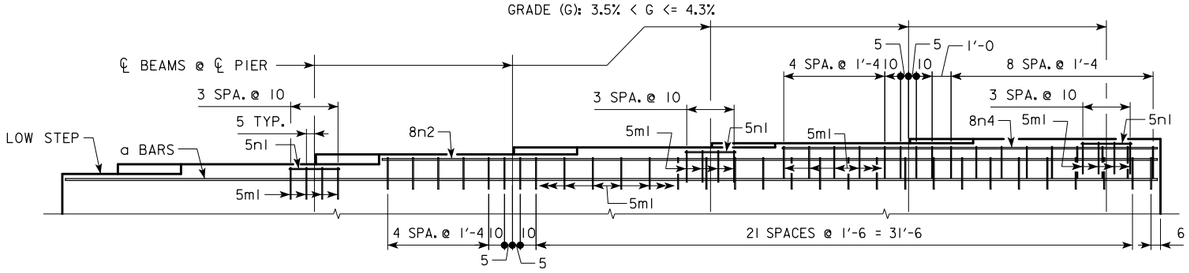

PART ELEVATION VIEW OF PIER CAP
GRADE (G): 4.3% < G <= 5.0%

STEP REINFORCING BAR LIST
ONE TEE PIER

			G <= 0.3%			0.3% < G <= 0.9%			0.9% < G <= 1.9%			1.9% < G <= 3.5%			3.5% < G <= 4.3%			4.3% < G <= 5.0%		
BAR	LENGTH	SHAPE	NO.	SIZE	WEIGHT	NO.	SIZE	WEIGHT	NO.	SIZE	WEIGHT	NO.	SIZE	WEIGHT	NO.	SIZE	WEIGHT	NO.	SIZE	WEIGHT
5ml	7'-4	⌐	16	5	122	20	5	153	40	5	306	46	5	352	51	5	390	59	5	451
5nl	2'-8	—	16	5	45	20	5	56	4	5	11	16	5	45	12	5	33	12	5	33
*8n2	VARIES	—	--	--	--	--	--	--	4	8	453	4	8	453	4	8	453	4	8	453
*8n3	VARIES	—	--	--	--	--	--	--	--	--	--	--	--	--	4	8	118	--	--	--
*8n4	VARIES	—	--	--	--	--	--	--	--	--	--	--	--	--	--	--	--	4	8	230
TOTAL (LB.)					167			209			770			850			994			1167

G = GRADE (%)

STEP REINFORCING BAR LIST
ONE PILE BENT PIER

			G <= 0.3%			0.3% < G <= 0.9%			0.9% < G <= 1.9%			1.9% < G <= 3.5%			3.5% < G <= 4.3%			4.3% < G <= 5.0%		
BAR	LENGTH	SHAPE	NO.	SIZE	WEIGHT	NO.	SIZE	WEIGHT	NO.	SIZE	WEIGHT	NO.	SIZE	WEIGHT	NO.	SIZE	WEIGHT	NO.	SIZE	WEIGHT
5ml	7'-3	⌐	16	5	121	20	5	151	40	5	302	46	5	348	51	5	386	59	5	446
5nl	2'-8	—	16	5	45	20	5	56	4	5	11	16	5	45	12	5	33	12	5	33
*8n2	VARIES	—	--	--	--	--	--	--	4	8	453	4	8	453	4	8	453	4	8	453
*8n3	VARIES	—	--	--	--	--	--	--	--	--	--	--	--	--	4	8	118	--	--	--
*8n4	VARIES	—	--	--	--	--	--	--	--	--	--	--	--	--	--	--	--	4	8	230
TOTAL (LB.)					166			207			766			846			990			1162

G = GRADE (%)

*8n2 BARS VARY FROM 41'-1 TO 43'-9
*8n3 BARS VARY FROM 9'-8 TO 12'-5
*8n4 BARS VARY FROM 20'-2 TO 22'-10

NOTE: THE REINFORCING STEEL QUANTITIES ARE TO BE INCLUDED ON THE SUMMARY QUANTITIES SHEET IN THE PLAN.

NOTE: THE CONCRETE QUANTITIES ARE TO BE INCLUDED ON THE SUMMARY QUANTITIES SHEET IN THE PLAN.

BENT BAR DETAILS

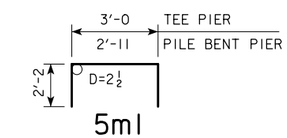

NOTE: ALL DIMENSIONS ARE OUT TO OUT.
D = PIN DIAMETER.

NOTES:

THE TABLE BELOW LISTS THE ADDITIONAL CONCRETE VOLUME REQUIRED IN EACH ABUTMENT FOOTING/PIER CAP BASED ON THE ROADWAY GRADE AT EACH ABUTMENT FOOTING/PIER CAP. ADDITIONAL CONCRETE SHOULD BE ADDED TO THE PLANS FOR EACH ABUTMENT FOOTING/PIER CAP THAT HAS 0.5 CU. YDS. OR MORE OF ADDITIONAL CONCRETE. VALUES SHOULD BE EXCLUDED FOR SCENARIOS THAT HAVE LESS THAN 0.5 CU. YDS. OF ADDITIONAL CONCRETE PER SUBSTRUCTURE UNIT. VALUES MAY BE INTERPOLATED FOR GRADES BETWEEN THE VALUES SHOWN IN THE TABLE.

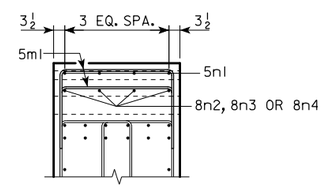

TYPICAL SECTION

ADDITIONAL CONCRETE VOLUME PER SUBSTRUCTURE UNIT (C.Y.)

	ROADWAY GRADE AT SUBSTRUCTURE UNIT				
	1%	2%	3%	4%	5%
EACH ABUTMENT FOOTING					
A, B BEAMS	0.9	2.1	3.4	4.7	5.9
C BEAMS	1.0	2.5	3.9	5.4	6.8
EACH TEE PIER CAP - ALL BEAMS	0.9	2.3	3.8	5.3	6.8
EACH PILE BENT PIER - ALL BEAMS	0.9	2.2	3.7	5.1	6.6

LATEST REVISION DATE

APPROVED BY BRIDGE ENGINEER

IOWA DOT Highway Division

STANDARD DESIGN - 40' ROADWAY, THREE SPAN BRIDGE

PRETENSIONED PRESTRESSED CONCRETE BEAM BRIDGES

SEPTEMBER, 2014

ADDITIONAL QUANTITIES
45° SKEW

H40-31-14

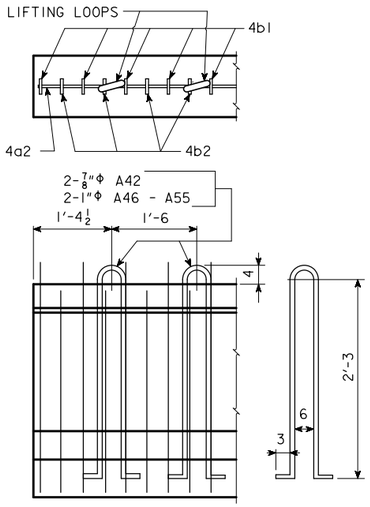

LIFTING LOOP DETAIL

ALTERNATE TYPES MAY BE SUBSTITUTED WITH THE APPROVAL OF THE ENGINEER. LIFTING LOOPS ARE TO BE STRUCTURAL GRADE.

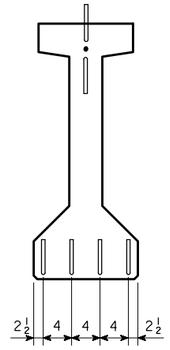

2 TOP DEFLECTED OR STRAIGHT STRANDS ARE TO BE CUT WITH 1'-0 PROJECTIONS AND SHOP BENT UP OR DOWN AS SHOWN (BEND TOP AND BOTTOM ROWS). THE REMAINING TOP STRANDS ARE TO BE CUT WITH 0'-3 PROJECTIONS.
FOUR BOTTOM STRANDS ARE TO BE CUT WITH 1'-0 PROJECTIONS AND SHOP BENT AS SHOWN. THE REMAINING BOTTOM STRANDS SHALL BE CUT OFF REASONABLY FLUSH WITH THE CONCRETE.

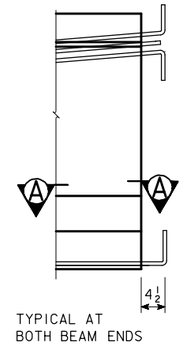

STRAND PROJECTION AT BEAM ENDS WHEN EMBEDDED IN CONCRETE END DIAPHRAGMS

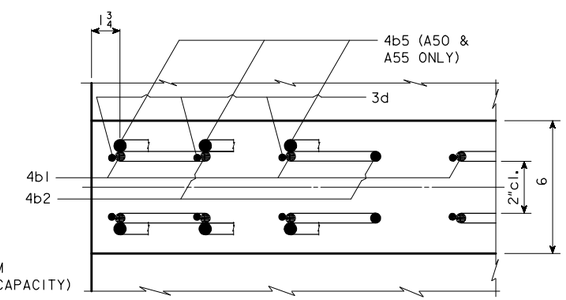

SECTION A-A SHOWING PLACEMENT OF STIRRUPS NEAR END OF BEAM

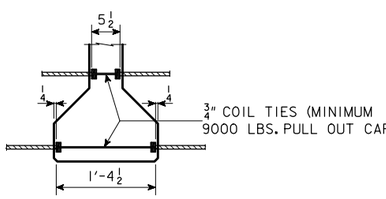

COIL TIE DETAIL

NUMBER AND EXACT LOCATION OF COIL TIES TO BE AS DETAILED ON SPECIFIC BRIDGE DESIGN.

A BEAM DATA

BEAM	SPAN LENGTH ℄-℄ BEARING	OVERALL BEAM LENGTH (L)	STRAND SIZE	NO. OF STRANDS		TOTAL INITIAL PRESTRESS ③ KIPS	HOLD DOWN FORCE-KIPS	CAMBER (in.)				DEFLECTION (in.) Δ_D				PERMISSIBLE SPACING				WEIGHT (TONS)		CONCRETE (C. Y.)	REINFORCING STEEL-(lb)
								AT RELEASE		AFTER LOSSES		IMMEDIATE① (ELASTIC) Δ_I		TIME ② (PLASTIC) Δ_T				HL93 LOADING					
				STRAIGHT	DEFLECTED							CONC. DIAPH.	STEEL DIAPH.	CONC. DIAPH.	STEEL DIAPH.			CONC. DIAPH.	STEEL DIAPH.				
A42	42'-6	43'-6	0.6"	7	2	383	9.3	0.70		1.24		0.38	0.35	0.09	0.09			7'-6	7'-6	7.1		3.49	452
*A46	46'-8	47'-8	0.6"	8	2	426	8.5	0.76		1.35		0.50	0.47	0.13	0.12			7'-6	7'-6	7.7		3.82	488
*A50	50'-10	51'-10	0.6"	9	3	510.9	11.7	1.02		1.82		0.69	0.65	0.17	0.16			7'-6	7'-6	8.4		4.15	503
*A55	55'-0	56'-0	0.6"	10	3	553.4	10.8	1.29		2.30		0.94	0.88	0.23	0.22			7'-6	7'-6	9.1		4.49	547

① DEFLECTIONS AT MID-SPAN DUE TO WEIGHT OF SLAB AND DIAPHRAGM. THE DEFLECTIONS SHOWN ARE FOR A SLAB WEIGHT OF 757 #/FT. (8" SLAB AND 7'-6 BEAM SPACING) AND ONE CONCRETE DIAPHRAGM (1912 #) OR ONE STEEL DIAPHRAGM (285 #) AT ℄ OF SPAN. FOR DIFFERENT SLAB AND DIAPHRAGM WEIGHTS, DEFLECTIONS WILL BE DIRECTLY PROPORTIONAL.

② DEFLECTIONS DUE TO THE COMBINED EFFECT OF CREEP DUE TO WEIGHT OF SLAB AND SHRINKAGE OF SLAB.

TOTAL BEAM DEFLECTIONS AT ℄ OF SPAN, Δ_D, DUE TO WEIGHT OF SLAB AND DIAPHRAGMS FOR DETAILING PURPOSE:
(A) $\Delta_D = \Delta_I + \Delta_T$ FOR SIMPLE SPAN.
(B) $\Delta_D = \Delta_I + \frac{3}{4}\Delta_T$ FOR END SPANS OF CONTINUOUS BRIDGE.
(C) $\Delta_D = \Delta_I + \frac{1}{2}\Delta_T$ FOR INTERIOR SPANS OF CONTINUOUS BRIDGE.

③ TOTAL INITIAL PRESTRESS IS BASED ON 72.6% f's, f's = 270 ksi AND As = 0.217 sq. in.

* MINIMUM CONCRETE f'c (AT 28 DAYS) SHALL BE 7,000 psi. MINIMUM f'ci AT RELEASE SHALL BE 6,000 psi.

SPECIFICATIONS:

CONSTRUCTION: STANDARD SPECIFICATIONS OF THE IOWA DEPARTMENT OF TRANSPORTATION, CURRENT SERIES, WITH CURRENT APPLICABLE SPECIAL PROVISIONS AND SUPPLEMENTAL SPECIFICATIONS.

DESIGN: A.A.S.H.T.O. LRFD, SERIES OF 2007, WITH MINOR MODIFICATIONS.

DESIGN STRESSES:

DESIGN STRESSES FOR THE FOLLOWING MATERIALS ARE TO BE IN ACCORDANCE WITH A.A.S.H.T.O. LRFD SPECIFICATIONS FOR HIGHWAY BRIDGES, SERIES OF 2007:

REINFORCING STEEL IN ACCORDANCE WITH SECTION 5, GRADE 60.

CONCRETE IN ACCORDANCE WITH SECTION 5, f'c = 5000 psi (EXCEPT AS NOTED)

PRESTRESSING STEEL IN ACCORDANCE WITH SECTION 5, f's = 270,000 psi.

NOTES:

THESE BEAMS ARE DESIGNED FOR AASHTO LIVE LOADS AS INDICATED IN ABOVE TABLE WITH AN ALLOWANCE OF 20 lb. PER SQUARE FOOT OF ROADWAY FOR FUTURE WEARING SURFACE.

HOLD DOWN POINTS FOR DEFLECTED STRANDS MAY BE MOVED TOWARD ENDS OF BEAM A DISTANCE OF 0.05 L MAXIMUM AT PRODUCER'S OPTION.

ALL PRESTRESSING STRANDS SHALL CONFORM TO ASTM A416 GRADE 270 LOW RELAXATION STRANDS.

TOPS OF BEAMS ARE TO BE STRUCK OFF LEVEL AND FINSHED AS PER MATERIALS IM570.

BEARINGS SHALL BE AS DETAILED ON OTHER DESIGN SHEETS.

BEAMS TO BE USED IN BRIDGES MADE CONTINUOUS BY THE POURED IN PLACE FLOOR, ARE TO BE AT LEAST 28 DAYS OLD BEFORE THE FLOOR IS PLACED UNLESS A SHORTER CURING TIME IS APPROVED BY THE BRIDGE ENGINEER.

THE PORTIONS OF THE PRESTRESS BEAMS THAT ARE TO BE EMBEDDED IN THE ABUTMENT AND PIER DIAPHRAGMS SHALL BE ROUGHENED FOR A DISTANCE OF 10" FROM THE BEAM END BY SANDBLASTING OR OTHER APPROVED METHODS TO PROVIDE SUITABLE BOND BETWEEN THE BEAM AND THE DIAPHRAGM IN ACCORDANCE WITH ARTICLE 2403.03, I, OF THE STANDARD SPECIFICATIONS.

ALL BEAMS ARE TO BE INCREASED IN LENGTH TO COMPENSATE FOR ELASTIC SHORTENING, CREEP AND SHRINKAGE.

IF THE STEEL DIAPHRAGM OPTION IS ALLOWED AND USED, HOLES MUST BE CAST IN THE WEB TO ACCOMMODATE THE STEEL DIAPHRAGM ATTACHMENTS AS DETAILED ON THE STEEL DIAPHRAGM DETAIL SHEET.

IF SOLE PLATE IS REQUIRED FOR BEARING, SOLE PLATE IS TO BE SET IN FORMS WHEN BEAM IS CAST AND FORMED OUT BELOW TO EXCLUDE CONCRETE AS DETAILED ON THE BEARING SHEET.

0.6" DIAMETER STRANDS STRESSED TO NOT MORE THAN 5,000 LBS. EACH MAY BE USED IN LIEU OF THE a BARS WHICH RUN THE FULL LENGTH OF THE BEAM IN THE TOP FLANGE.

REINFORCING BAR LIST

	BEAM / SPAN		A42 42'-6		A46 46'-8		A50 50'-10		A55 55'-0	
	BAR	SHAPE	NO.	LENGTH	NO.	LENGTH	NO.	LENGTH	NO.	LENGTH
	5a1		4	22'-10	4	24'-11	4	27'-0	4	29'-1
	4a2		2	3'-3	2	3'-3	2	3'-3	2	3'-3
ΔΔ	4b1		40	6'-8	44	6'-8	46	6'-8	50	6'-8
	4b2		12	5'-0	12	5'-0	8	5'-0	8	5'-0
	4b5		—	—	—	—	8	2'-9	12	2'-9
	3c1		40	1'-3	44	1'-3	46	1'-3	50	1'-3
**	3d		104	2'-8	112	2'-8	108	2'-8	116	2'-8
	3e		20	1'-6	20	1'-6	18	1'-6	18	1'-6

ΔΔ 4b1 BARS TO BE EPOXY COATED.

** WHERE DEFLECTING STRANDS INTERFERE WITH PLACEMENT, SOME IN-PLACE BENDING MAY BE NECESSARY.

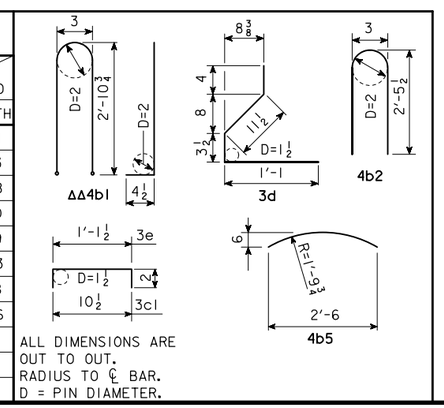

ALL DIMENSIONS ARE OUT TO OUT.
RADIUS TO ℄ BAR.
D = PIN DIAMETER.

LATEST REVISION DATE

APPROVED BY BRIDGE ENGINEER

IOWA DOT Highway Division

STANDARD DESIGN - 40' ROADWAY, THREE SPAN BRIDGE

PRETENSIONED PRESTRESSED CONCRETE BEAM BRIDGES

SEPTEMBER, 2014

A BEAM DETAILS

H40-32-14

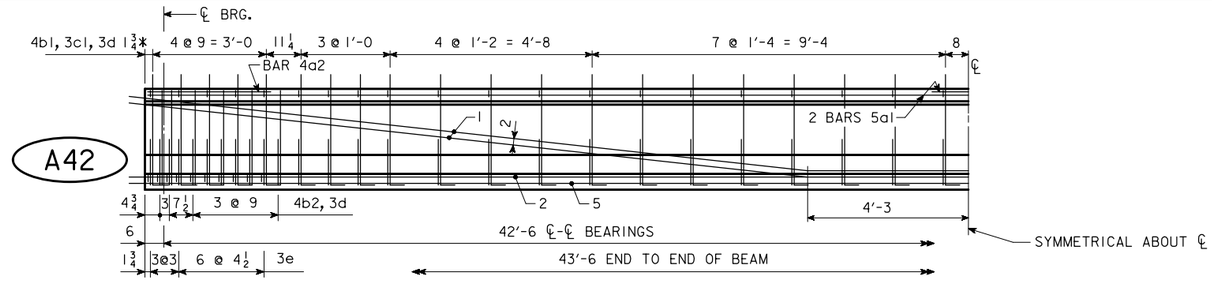

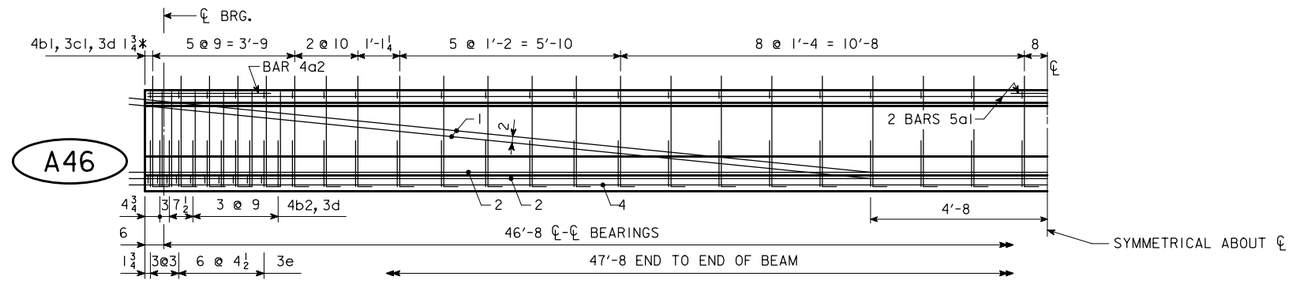

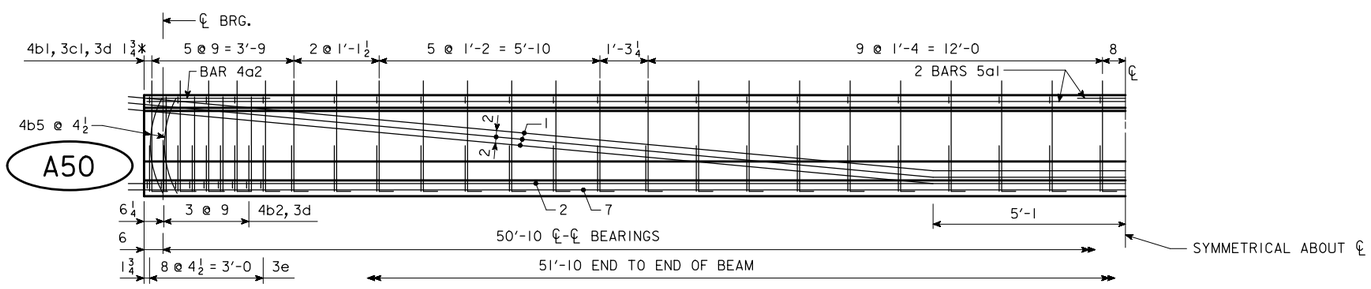

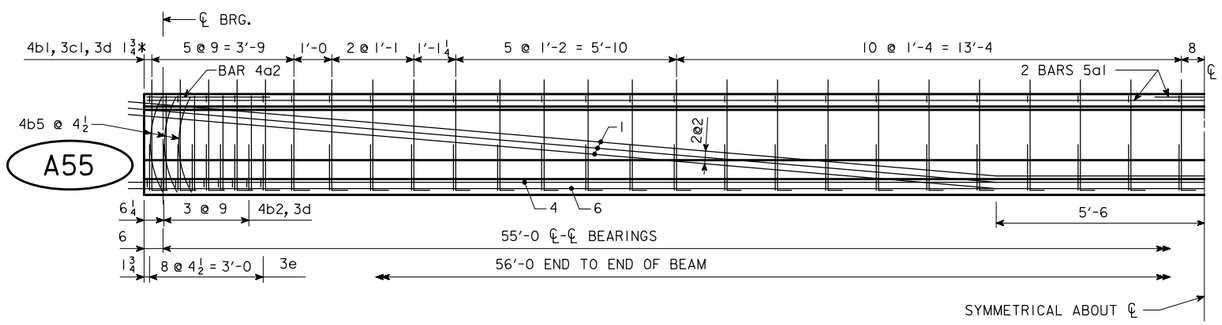

NOTE: DIMENSIONS FOR THE LOCATION OF THE DEFLECTED STRANDS ARE AT ℄ BEAM AND END OF BEAM.

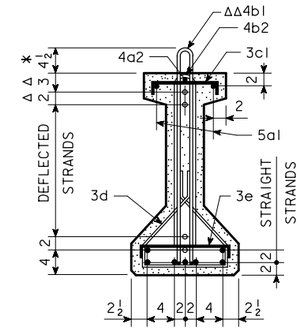

BEAM A42

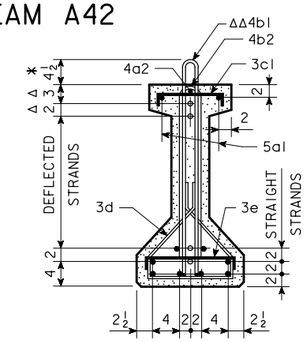

BEAM A46

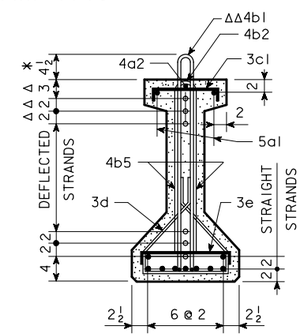

BEAM A50

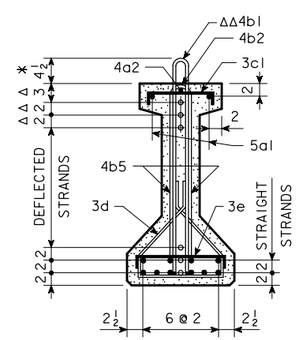

BEAM A55

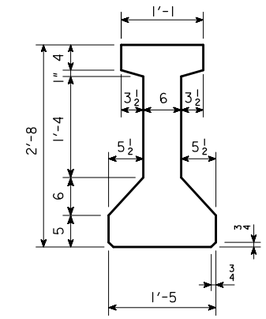

"A" BEAM CROSS SECTION

A = 311.5 in²
Y_b = 14.05 in.
I = 34,082 in.⁴

NOTE: BARS 3d ARE TO BE PLACED IN PAIRS.

- ○ DEFLECTED STRANDS
- ✱ KEEP
- Δ DIMENSIONS AT END OF BEAM
- ΔΔ EPOXY COATED BARS

LATEST REVISION DATE

APPROVED BY BRIDGE ENGINEER

IOWA DOT Highway Division

STANDARD DESIGN - 40' ROADWAY, THREE SPAN BRIDGE

PRETENSIONED PRESTRESSED CONCRETE BEAM BRIDGES

SEPTEMBER, 2014

A BEAM DETAILS

H40-33-14

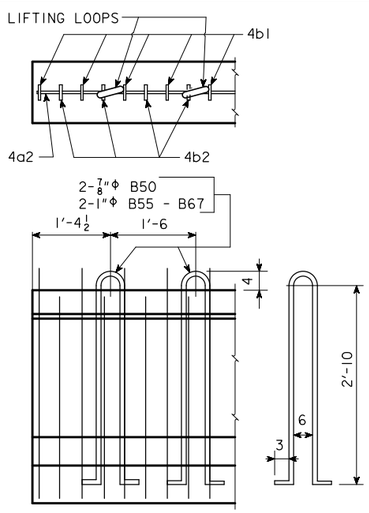

LIFTING LOOP DETAIL

ALTERNATE TYPES MAY BE SUBSTITUTED WITH THE APPROVAL OF THE ENGINEER. LIFTING LOOPS ARE TO BE STRUCTURAL GRADE.

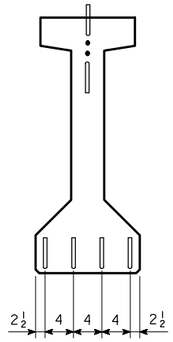

2 TOP DEFLECTED OR STRAIGHT STRANDS ARE TO BE CUT WITH 1'-0 PROJECTIONS AND SHOP BENT UP OR DOWN AS SHOWN (BEND TOP AND BOTTOM ROWS). THE REMAINING TOP STRANDS ARE TO BE CUT WITH 0'-3 PROJECTIONS.
FOUR BOTTOM STRANDS ARE TO BE CUT WITH 1'-0 PROJECTIONS AND SHOP BENT AS SHOWN. THE REMAINING BOTTOM STRANDS SHALL BE CUT OFF REASONABLY FLUSH WITH THE CONCRETE.

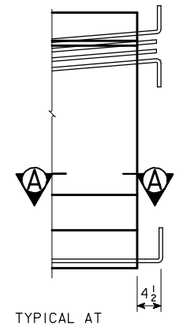

TYPICAL AT BOTH BEAM ENDS.

STRAND PROJECTION AT BEAM ENDS WHEN EMBEDDED IN CONCRETE END DIAPHRAGMS

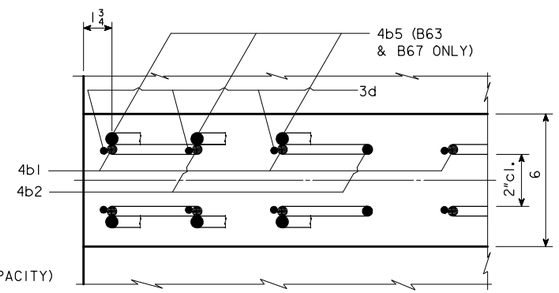

SECTION A-A SHOWING PLACEMENT OF STIRRUPS NEAR END OF BEAM

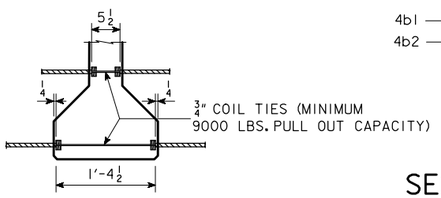

COIL TIE DETAIL

NUMBER AND EXACT LOCATION OF COIL TIES TO BE AS DETAILED ON SPECIFIC BRIDGE DESIGN.

B BEAM DATA

BEAM	SPAN LENGTH ℄-℄ BEARING	OVERALL BEAM LENGTH (L)	STRAND SIZE DIA. (inches)	NO. OF STRANDS		TOTAL INITIAL PRESTRESS ③ KIPS	HOLD DOWN FORCE-KIPS	CAMBER (in.)				DEFLECTION (in.) Δ_D				PERMISSIBLE SPACING				WEIGHT (TONS)		CONCRETE (C. Y.)	REINFORCING STEEL-(lb)
								AT RELEASE		AFTER LOSSES		IMMEDIATE① (ELASTIC) Δ_I		TIME ② (PLASTIC) Δ_T				HL93 LOADING					
				STRAIGHT	DEFLECTED							CONC. DIAPH.	STEEL DIAPH.	CONC. DIAPH.	STEEL DIAPH.			CONC. DIAPH.	STEEL DIAPH.				
B50	50'-10	51'-10	0.60	8	2	425	10.8	0.67		1.24		0.43	0.39	0.11	0.10			7'-6	7'-6	10.3		5.10	607
*B55	55'-0	56'-0	0.60	8	3	468	14.1	0.85		1.51		0.58	0.54	0.14	0.13			7'-6	7'-6	11.2		5.51	635
*B59	59'-2	60'-2	0.60	10	3	554	13.2	1.12		1.99		0.82	0.77	0.21	0.19			7'-6	7'-6	12.0		5.92	680
*B63	63'-4	64'-4	0.60	12	3	639	12.3	1.30		2.32		0.91	0.84	0.23	0.21			7'-6	7'-6	12.8		6.33	733
*B67	67'-6	68'-6	0.60	14	3	724	11.6	1.69		2.98		1.16	1.09	0.29	0.27			7'-6	7'-6	13.6		6.74	778

① DEFLECTIONS AT MID-SPAN DUE TO WEIGHT OF SLAB AND DIAPHRAGM. THE DEFLECTIONS SHOWN ARE FOR A SLAB WEIGHT OF 757 #/FT. (8" SLAB AND 7'-6 BEAM SPACING) AND ONE CONCRETE DIAPHRAGM (2270 #) OR ONE STEEL DIAPHRAGM (285 #) AT ℄ OF SPAN. FOR DIFFERENT SLAB AND DIAPHRAGM WEIGHTS, DEFLECTIONS WILL BE DIRECTLY PROPORTIONAL.

② DEFLECTIONS DUE TO THE COMBINED EFFECT OF CREEP DUE TO WEIGHT OF SLAB AND SHRINKAGE OF SLAB.

TOTAL BEAM DEFLECTIONS AT ℄ OF SPAN, Δ_D, DUE TO WEIGHT OF SLAB AND DIAPHRAGMS FOR DETAILING PURPOSE:
(A) $\Delta_D = \Delta_I + \Delta_T$ FOR SIMPLE SPAN.
(B) $\Delta_D = \Delta_I + \frac{3}{4}\Delta_T$ FOR END SPANS OF CONTINUOUS BRIDGE.
(C) $\Delta_D = \Delta_I + \frac{1}{2}\Delta_T$ FOR INTERIOR SPANS OF CONTINUOUS BRIDGE.

③ TOTAL INITIAL PRESTRESS IS BASED ON 72.6% f's, f's = 270 ksi AND As = 0.217 sq. in.

* MINIMUM CONCRETE f'c (AT 28 DAYS) SHALL BE 7,000 psi. MINIMUM f'ci AT RELEASE SHALL BE 6,000 psi.

SPECIFICATIONS:

CONSTRUCTION: STANDARD SPECIFICATIONS OF THE IOWA DEPARTMENT OF TRANSPORTATION, CURRENT SERIES, WITH CURRENT APPLICABLE SPECIAL PROVISIONS AND SUPPLEMENTAL SPECIFICATIONS.

DESIGN: A.A.S.H.T.O. LRFD, SERIES OF 2007, WITH MINOR MODIFICATIONS.

DESIGN STRESSES:

DESIGN STRESSES FOR THE FOLLOWING MATERIALS ARE TO BE IN ACCORDANCE WITH A.A.S.H.T.O. LRFD SPECIFICATIONS FOR HIGHWAY BRIDGES, SERIES OF 2007:

REINFORCING STEEL IN ACCORDANCE WITH SECTION 5, GRADE 60.

CONCRETE IN ACCORDANCE WITH SECTION 5, f'c = 5000 psi (EXCEPT AS NOTED)

PRESTRESSING STEEL IN ACCORDANCE WITH SECTION 5, f's = 270,000 psi.

NOTES:

THESE BEAMS ARE DESIGNED FOR AASHTO LIVE LOADS AS INDICATED IN ABOVE TABLE WITH AN ALLOWANCE OF 20 lb. PER SQUARE FOOT OF ROADWAY FOR FUTURE WEARING SURFACE.

HOLD DOWN POINTS FOR DEFLECTED STRANDS MAY BE MOVED TOWARD ENDS OF BEAM A DISTANCE OF 0.05 L MAXIMUM AT PRODUCER'S OPTION.

ALL PRESTRESSING STRANDS SHALL CONFORM TO ASTM A416 GRADE 270 LOW RELAXATION STRANDS.

TOPS OF BEAMS ARE TO BE STRUCK OFF LEVEL AND FINSHED AS PER MATERIALS IM570.

BEARINGS SHALL BE AS DETAILED ON OTHER DESIGN SHEETS.

BEAMS TO BE USED IN BRIDGES MADE CONTINUOUS BY THE POURED IN PLACE FLOOR, ARE TO BE AT LEAST 28 DAYS OLD BEFORE THE FLOOR IS PLACED UNLESS A SHORTER CURING TIME IS APPROVED BY THE BRIDGE ENGINEER.

THE PORTIONS OF THE PRESTRESS BEAMS THAT ARE TO BE EMBEDDED IN THE ABUTMENT AND PIER DIAPHRAGMS SHALL BE ROUGHENED FOR A DISTANCE OF 10" FROM THE BEAM END BY SANDBLASTING OR OTHER APPROVED METHODS TO PROVIDE SUITABLE BOND BETWEEN THE BEAM AND THE DIAPHRAGM IN ACCORDANCE WITH ARTICLE 2403.03, I, OF THE STANDARD SPECIFICATIONS.

ALL BEAMS ARE TO BE INCREASED IN LENGTH TO COMPENSATE FOR ELASTIC SHORTENING, CREEP AND SHRINKAGE.

IF THE STEEL DIAPHRAGM OPTION IS ALLOWED AND USED, HOLES MUST BE CAST IN THE WEB TO ACCOMMODATE THE STEEL DIAPHRAGM ATTACHMENTS AS DETAILED ON THE STEEL DIAPHRAGM DETAIL SHEET.

IF SOLE PLATE IS REQUIRED FOR BEARING, SOLE PLATE IS TO BE SET IN FORMS WHEN BEAM IS CAST AND FORMED OUT BELOW TO EXCLUDE CONCRETE AS DETAILED ON THE BEARING SHEET.

0.6" DIAMETER STRANDS STRESSED TO NOT MORE THAN 5,000 LBS. EACH MAY BE USED IN LIEU OF THE a BARS WHICH RUN THE FULL LENGTH OF THE BEAM IN THE TOP FLANGE.

ΔΔ4b1 BARS TO BE EPOXY COATED.

** WHERE DEFLECTING STRANDS INTERFERE WITH PLACEMENT, SOME IN-PLACE BENDING MAY BE NECESSARY.

REINFORCING BAR LIST

	BEAM / SPAN		B50 / 50'-10		B55 / 55'-0		B59 / 59'-2		B63 / 63'-4		B67 / 67'-6	
	BAR	SHAPE	NO.	LENGTH	NO.	LENGTH	NO.	LENGTH	NO.	LENGTH	NO.	LENGTH
	6a1	—	4	27'-3	4	29'-4	4	31'-5	4	33'-6	4	35'-7
	4a2	—	2	4'-2	2	4'-2	2	4'-2	2	4'-2	2	4'-2
ΔΔ	4b1		44	7'-10	46	7'-10	50	7'-10	52	7'-10	56	7'-10
	4b2		12	6'-2	12	6'-2	12	6'-2	12	6'-2	12	6'-2
	4b5		—	—	—	—	—	—	12	3'-3	12	3'-3
	3c1		44	1'-5	46	1'-5	50	1'-5	52	1'-5	56	1'-5
**	3d		112	2'-10	116	2'-10	124	2'-10	128	2'-10	136	2'-10
	3e		24	1'-8	24	1'-8	24	1'-8	24	1'-8	24	1'-8

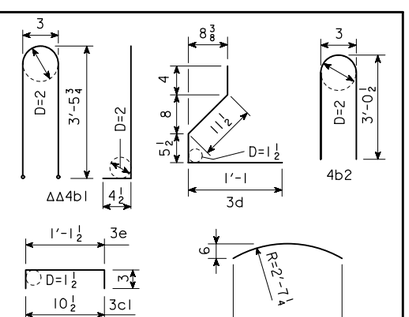

ALL DIMENSIONS ARE OUT TO OUT.
RADIUS TO ℄ BAR.
D = PIN DIAMETER.

LATEST REVISION DATE

APPROVED BY BRIDGE ENGINEER

IOWA DOT Highway Division

STANDARD DESIGN - 40' ROADWAY, THREE SPAN BRIDGE

PRETENSIONED PRESTRESSED CONCRETE BEAM BRIDGES

SEPTEMBER, 2014

B BEAM DETAILS

H40-34-14

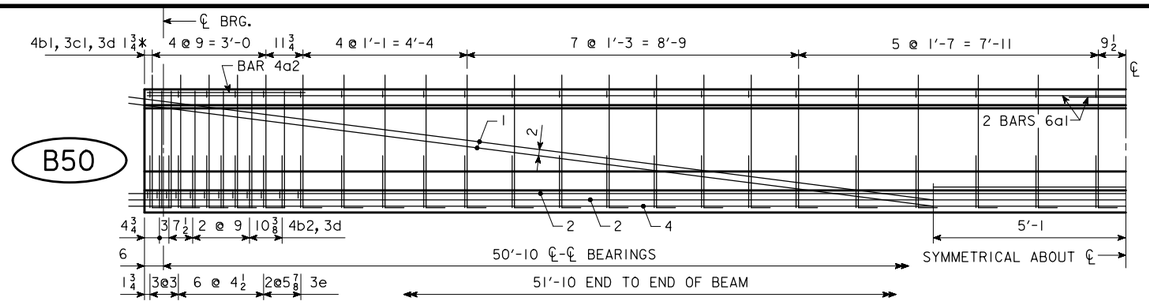

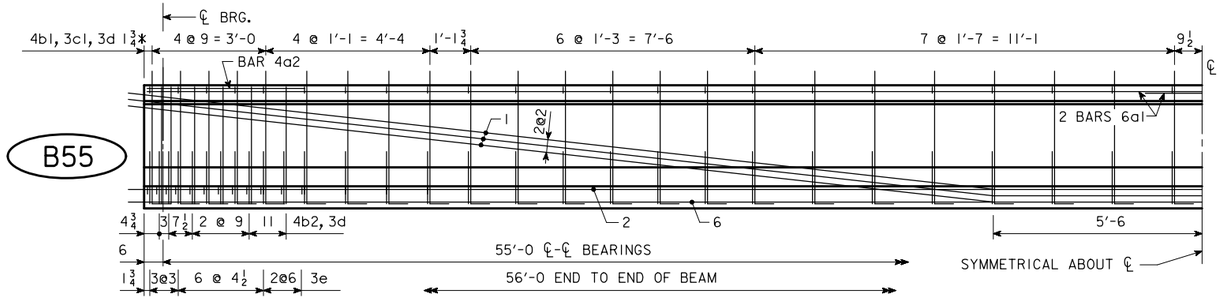

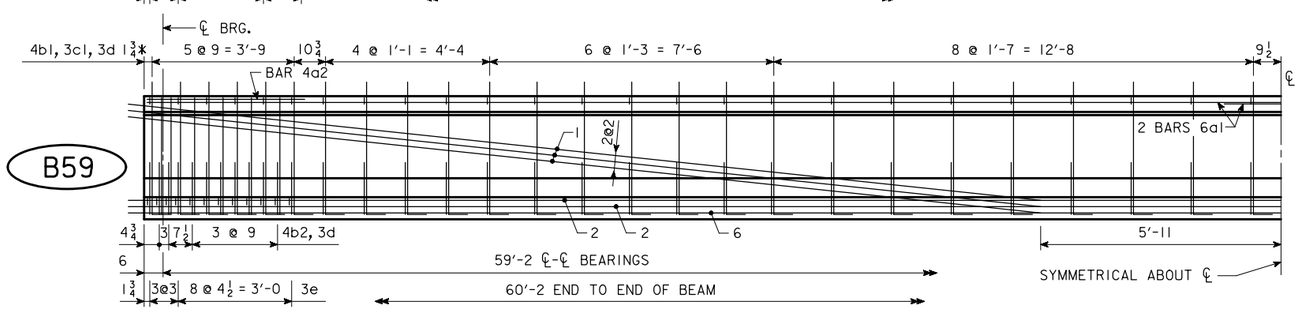

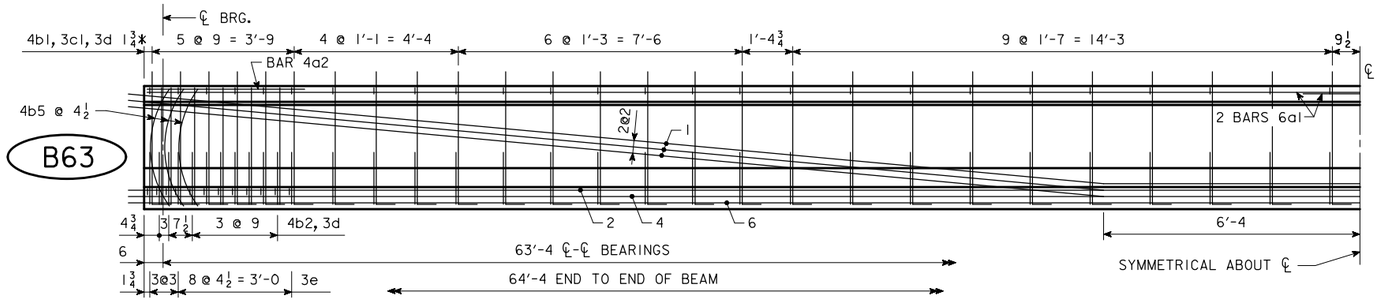

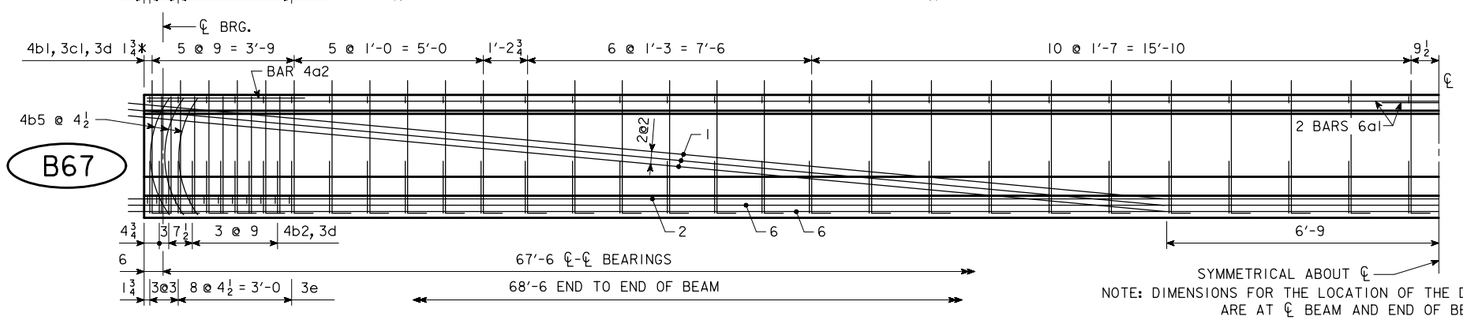

NOTE: DIMENSIONS FOR THE LOCATION OF THE DEFLECTED STRANDS ARE AT ℄ BEAM AND END OF BEAM.

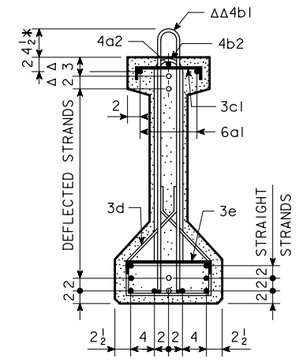

BEAM B50

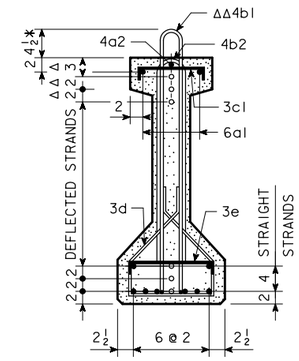

BEAM B55

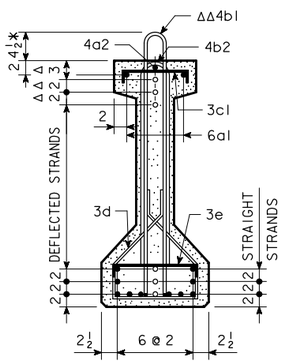

BEAM B59

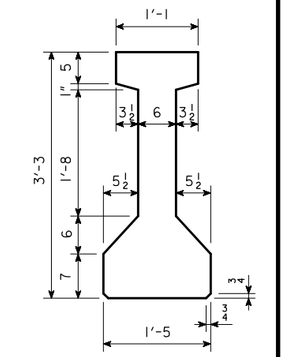

"B" BEAM
CROSS SECTION

A = 382.5 in.^{2}
Yb = 17.06 in.
I = 62,000 in.^{4}

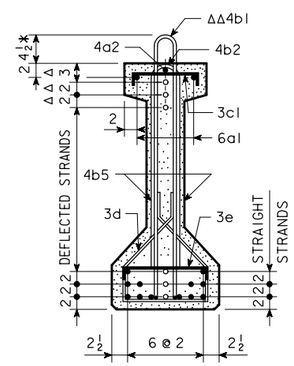

BEAM B63

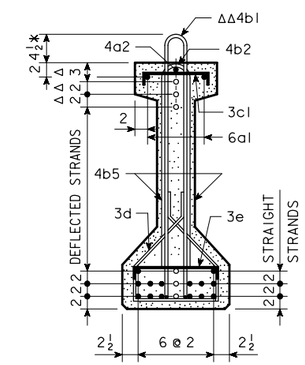

BEAM B67

NOTE: BARS 3d ARE TO BE PLACED IN PAIRS.

- ○ DEFLECTED STRANDS
- ✳ KEEP
- Δ DIMENSIONS AT END OF BEAM
- ΔΔ EPOXY COATED BARS

LATEST REVISION DATE

APPROVED BY BRIDGE ENGINEER

IOWA DOT Highway Division

STANDARD DESIGN - 40' ROADWAY, THREE SPAN BRIDGE

PRETENSIONED PRESTRESSED CONCRETE BEAM BRIDGES

SEPTEMBER, 2014

B BEAM DETAILS

H40-35-14

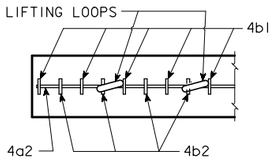

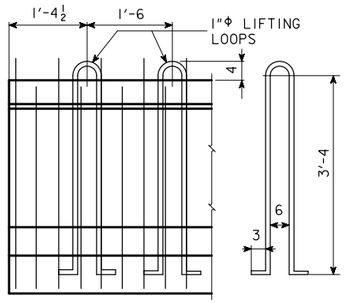

LIFTING LOOP DETAIL

ALTERNATE TYPES MAY BE SUBSTITUTED WITH THE APPROVAL OF THE ENGINEER. LIFTING LOOPS ARE TO BE STRUCTURAL GRADE.

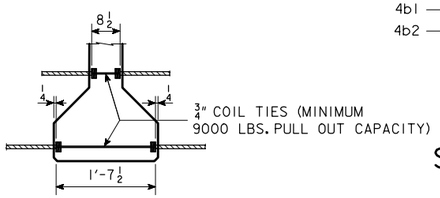

COIL TIE DETAIL

NUMBER AND EXACT LOCATION OF COIL TIES TO BE AS DETAILED ON SPECIFIC BRIDGE DESIGN.

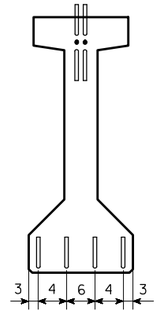

THE TOP STRAIGHT STRANDS OF BEAMS C63 AND C67 ARE TO BE CUT WITH 1'-0 PROJECTIONS AND SHOP BENT UP. THE TOP AND BOTTOM DEFLECTED STRANDS OF BEAMS C71 THROUGH C80 ARE TO BE CUT WITH 1'-0 PROJECTIONS AND SHOP BENT UP OR DOWN AS SHOWN. THE REMAINING TOP STRANDS ARE TO BE CUT WITH 0'-3 PROJECTIONS.
FOUR BOTTOM STRANDS ARE TO BE CUT WITH 1'-0 PROJECTIONS AND SHOP BENT AS SHOWN. THE REMAINING BOTTOM STRANDS SHALL BE CUT OFF REASONABLY FLUSH WITH THE CONCRETE.

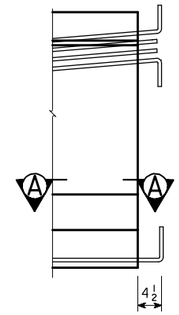

TYPICAL AT BOTH BEAM ENDS

STRAND PROJECTION AT BEAM ENDS WHEN EMBEDDED IN CONCRETE END DIAPHRAGMS

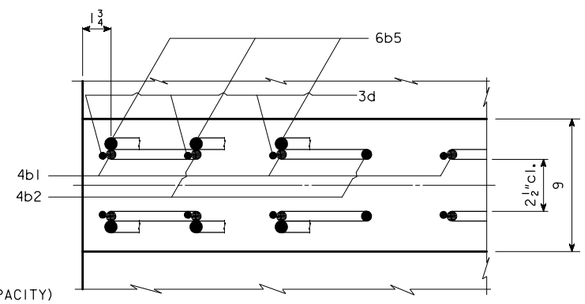

SECTION A-A SHOWING PLACEMENT OF STIRRUPS NEAR END OF BEAM

** WHERE DEFLECTING STRANDS INTERFERE WITH PLACEMENT, SOME IN-PLACE BENDING MAY BE NECESSARY.

ΔΔ 4b1 BARS TO BE EPOXY COATED.

C BEAM DATA

BEAM	SPAN LENGTH ℄-℄ BEARING	OVERALL BEAM LENGTH (L)	STRAND SIZE DIA. (inches)	NO. OF STRANDS STRAIGHT	NO. OF STRANDS DEFLECTED	TOTAL INITIAL PRESTRESS ③ KIPS	HOLD DOWN FORCE-KIPS	CAMBER (in.) AT RELEASE		CAMBER (in.) AFTER LOSSES		DEFLECTION (in.) Δ_D IMMEDIATE ① (ELASTIC) Δ_I CONC. DIAPH.	DEFLECTION IMMEDIATE STEEL DIAPH.	DEFLECTION TIME ② (PLASTIC) Δ_T CONC. DIAPH.	DEFLECTION TIME STEEL DIAPH.	PERMISSIBLE SPACING		PERMISSIBLE SPACING HL93 LOADING CONC. DIAPH.	PERMISSIBLE SPACING HL93 LOADING STEEL DIAPH.	WEIGHT (TONS)		CONCRETE (C. Y.)	REINFORCING STEEL-(lb)
C63	63'-4	64'-4	0.60	16	—	681	—	0.70		1.24		0.59	0.54	0.15	0.14			7'-6	7'-6	18.9		9.34	536
C67	67'-6	68'-6	0.60	18	—	766	—	0.92		1.62		0.76	0.71	0.19	0.18			7'-6	7'-6	20.1		9.95	576
*C71	71'-8	72'-8	0.60	14	4	766	16	1.21		2.13		0.88	0.82	0.22	0.20			7'-6	7'-6	21.4		10.55	855
*C75	75'-10	76'-10	0.60	14	6	851	22	1.33		2.34		1.07	0.99	0.27	0.25			7'-6	7'-6	22.6		11.16	925
*C80	80'-0	81'-0	0.60	16	6	937	21	1.64		2.90		1.31	1.24	0.33	0.31			7'-6	7'-6	23.8		11.76	1191

① DEFLECTIONS AT MID-SPAN DUE TO WEIGHT OF SLAB AND DIAPHRAGM. THE DEFLECTIONS SHOWN ARE FOR A SLAB WEIGHT OF 757 #/FT. (8" SLAB AND 7'-6 BEAM SPACING) AND ONE CONCRETE DIAPHRAGM (2635 #) OR ONE STEEL DIAPHRAGM (285 #) AT ℄ OF SPAN. FOR DIFFERENT SLAB AND DIAPHRAGM WEIGHTS, DEFLECTIONS WILL BE DIRECTLY PROPORTIONAL.

② DEFLECTIONS DUE TO THE COMBINED EFFECT OF CREEP DUE TO WEIGHT OF SLAB AND SHRINKAGE OF SLAB.

TOTAL BEAM DEFLECTIONS AT ℄ OF SPAN, Δ_D, DUE TO WEIGHT OF SLAB AND DIAPHRAGMS FOR DETAILING PURPOSE:
(A) $\Delta_D = \Delta_I + \Delta_T$ FOR SIMPLE SPAN.
(B) $\Delta_D = \Delta_I + \frac{3}{4}\Delta_T$ FOR END SPANS OF CONTINUOUS BRIDGE.
(C) $\Delta_D = \Delta_I + \frac{1}{2}\Delta_T$ FOR INTERIOR SPANS OF CONTINUOUS BRIDGE.

③ TOTAL INITIAL PRESTRESS IS BASED ON 72.6% f's, f's = 270 ksi AND As = 0.217 sq. in.

* MINIMUM CONCRETE f'c (AT 28 DAYS) SHALL BE 6,000 psi. MINIMUM f'ci AT RELEASE SHALL BE 5,000 psi.

SPECIFICATIONS:

CONSTRUCTION: STANDARD SPECIFICATIONS OF THE IOWA DEPARTMENT OF TRANSPORTATION, CURRENT SERIES, WITH CURRENT APPLICABLE SPECIAL PROVISIONS AND SUPPLEMENTAL SPECIFICATIONS.

DESIGN: A.A.S.H.T.O. LRFD, SERIES OF 2007, WITH MINOR MODIFICATIONS.

DESIGN STRESSES:

DESIGN STRESSES FOR THE FOLLOWING MATERIALS ARE TO BE IN ACCORDANCE WITH A.A.S.H.T.O. LRFD SPECIFICATIONS FOR HIGHWAY BRIDGES, SERIES OF 2007:

REINFORCING STEEL IN ACCORDANCE WITH SECTION 5, GRADE 60.

CONCRETE IN ACCORDANCE WITH SECTION 5, f'c = 5000 psi (EXCEPT AS NOTED)

PRESTRESSING STEEL IN ACCORDANCE WITH SECTION 5, f's = 270,000 psi.

NOTES:

THESE BEAMS ARE DESIGNED FOR AASHTO LIVE LOADS AS INDICATED IN ABOVE TABLE WITH AN ALLOWANCE OF 20 lb. PER SQUARE FOOT OF ROADWAY FOR FUTURE WEARING SURFACE.

HOLD DOWN POINTS FOR DEFLECTED STRANDS MAY BE MOVED TOWARD ENDS OF BEAM A DISTANCE OF 0.05 L MAXIMUM AT PRODUCER'S OPTION.

ALL PRESTRESSING STRANDS SHALL CONFORM TO ASTM A416 GRADE 270 LOW RELAXATION STRANDS.

TOPS OF BEAMS ARE TO BE STRUCK OFF LEVEL AND FINISHED AS PER MATERIALS IM570.

BEARINGS SHALL BE AS DETAILED ON OTHER DESIGN SHEETS.

BEAMS TO BE USED IN BRIDGES MADE CONTINUOUS BY THE POURED IN PLACE FLOOR, ARE TO BE AT LEAST 28 DAYS OLD BEFORE THE FLOOR IS PLACED UNLESS A SHORTER CURING TIME IS APPROVED BY THE BRIDGE ENGINEER.

THE PORTIONS OF THE PRESTRESS BEAMS THAT ARE TO BE EMBEDDED IN THE ABUTMENT AND PIER DIAPHRAGMS SHALL BE ROUGHENED FOR A DISTANCE OF 10" FROM THE BEAM END BY SANDBLASTING OR OTHER APPROVED METHODS TO PROVIDE SUITABLE BOND BETWEEN THE BEAM AND THE DIAPHRAGM IN ACCORDANCE WITH ARTICLE 2403.03, 1, OF THE STANDARD SPECIFICATIONS.

ALL BEAMS ARE TO BE INCREASED IN LENGTH TO COMPENSATE FOR ELASTIC SHORTENING, CREEP AND SHRINKAGE.

IF THE STEEL DIAPHRAGM OPTION IS ALLOWED AND USED, HOLES MUST BE CAST IN THE WEB TO ACCOMMODATE THE STEEL DIAPHRAGM ATTACHMENTS AS DETAILED ON THE STEEL DIAPHRAGM DETAIL SHEET.

IF SOLE PLATE IS REQUIRED FOR BEARING, SOLE PLATE IS TO BE SET IN FORMS WHEN BEAM IS CAST AND FORMED OUT BELOW TO EXCLUDE CONCRETE AS DETAILED ON THE BEARING SHEET.

0.6" DIAMETER STRANDS STRESSED TO NOT MORE THAN 5,000 LBS. EACH MAY BE USED IN LIEU OF THE a BARS WHICH RUN THE FULL LENGTH OF THE BEAM IN THE TOP FLANGE.

REINFORCING BAR LIST

	BAR	SHAPE	C63 63'-4 NO.	C63 63'-4 LENGTH	C67 67'-6 NO.	C67 67'-6 LENGTH	C71 71'-8 NO.	C71 71'-8 LENGTH	C75 75'-10 NO.	C75 75'-10 LENGTH	C80 80'-0 NO.	C80 80'-0 LENGTH
	6a1	—	—	—	—	—	4	37'-8	4	39'-9	4	41'-10
	4a2	—	2	5'-0	2	5'-0	2	5'-0	2	5'-0	2	5'-0
	8a3	—	—	—	—	—	—	—	—	—	2	40'-0
ΔΔ	4b1		46	8'-10	48	8'-10	54	8'-10	58	8'-10	60	8'-10
	4b2		12	7'-2	12	7'-2	12	7'-2	12	7'-2	12	7'-2
	6b5		4	3'-9	8	3'-9	8	3'-9	12	3'-9	16	3'-9
	3c1		46	1'-8	48	1'-8	54	1'-8	58	1'-8	60	1'-8
**	3d		116	3'-0	120	3'-0	132	3'-0	140	3'-0	144	3'-0
	3e		26	1'-10	26	1'-10	26	1'-10	26	1'-10	26	1'-10

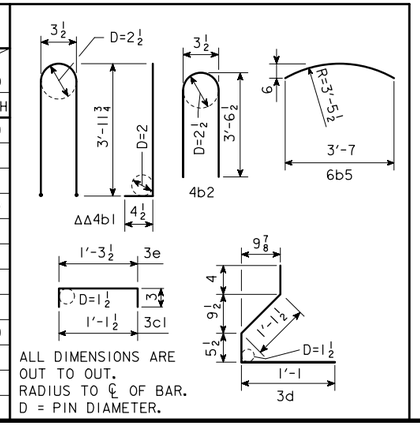

ALL DIMENSIONS ARE OUT TO OUT.
RADIUS TO ℄ OF BAR.
D = PIN DIAMETER.

LATEST REVISION DATE

APPROVED BY BRIDGE ENGINEER

IOWA DOT Highway Division

STANDARD DESIGN - 40' ROADWAY, THREE SPAN BRIDGE

PRETENSIONED PRESTRESSED CONCRETE BEAM BRIDGES

SEPTEMBER, 2014

C BEAM DETAILS

H40-36-14

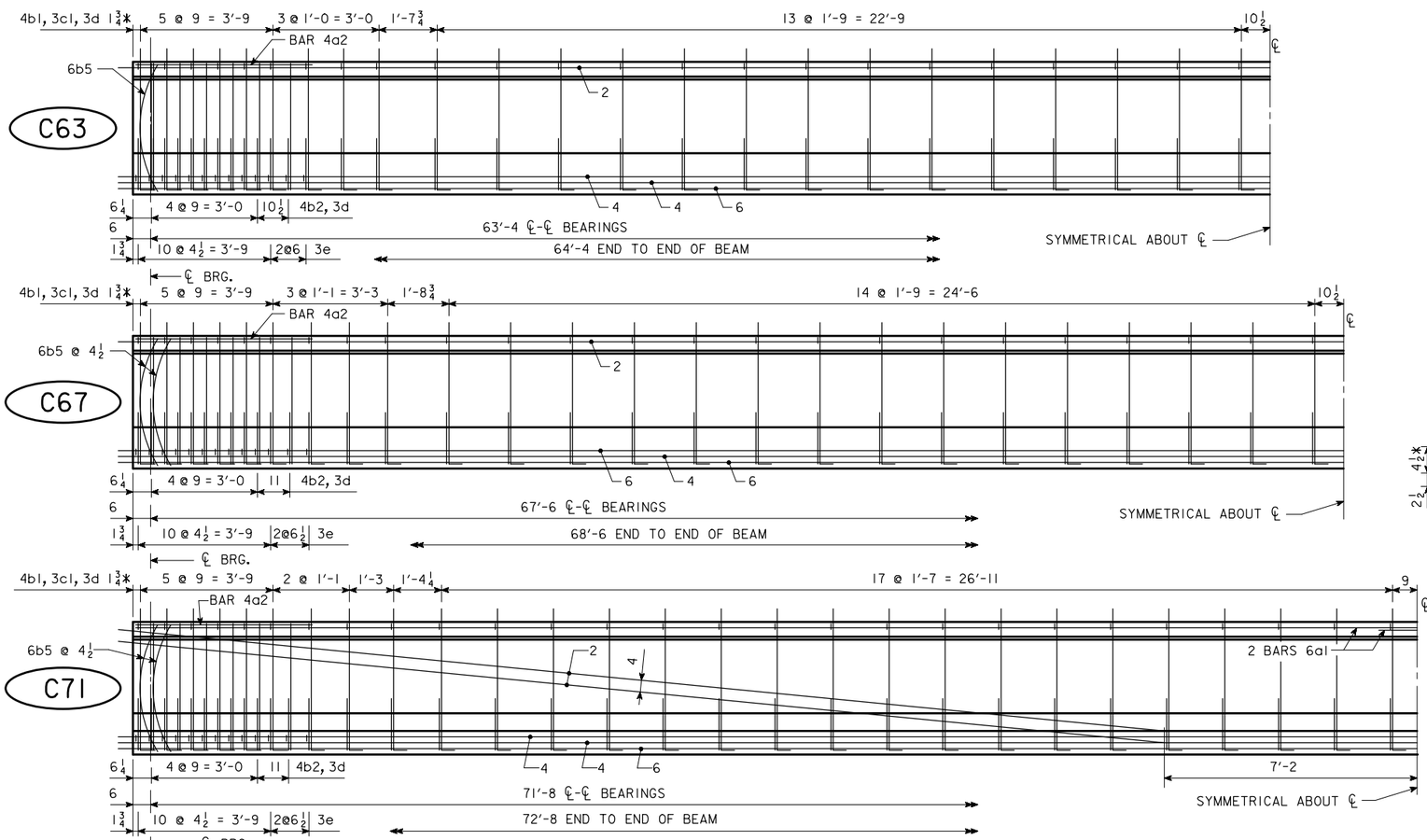

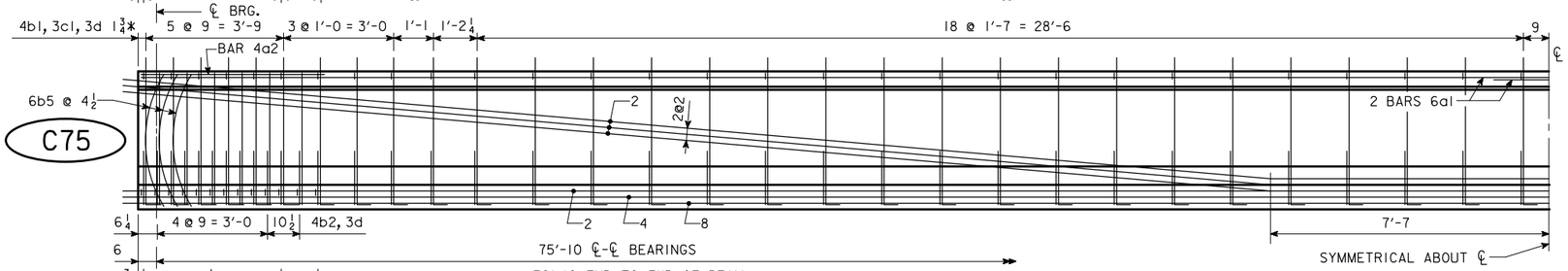

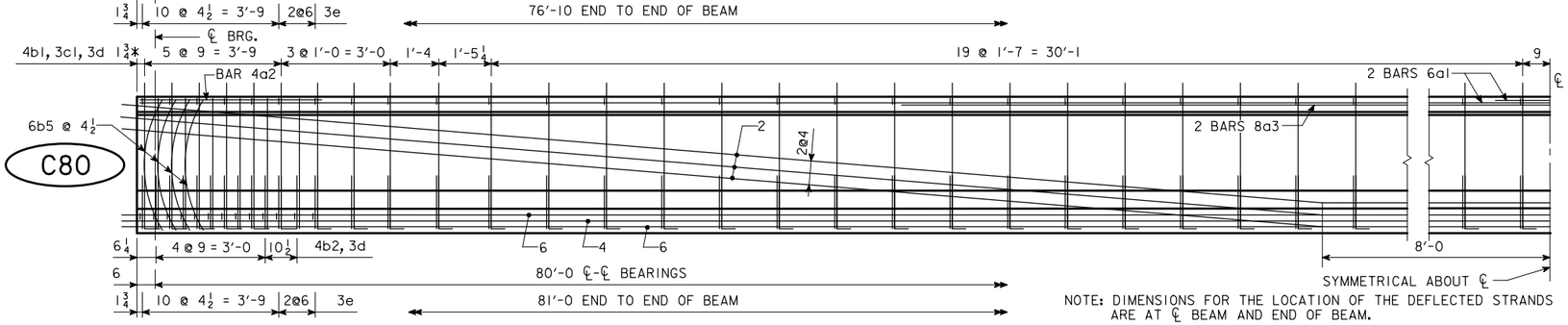

NOTE: DIMENSIONS FOR THE LOCATION OF THE DEFLECTED STRANDS ARE AT ℄ BEAM AND END OF BEAM.

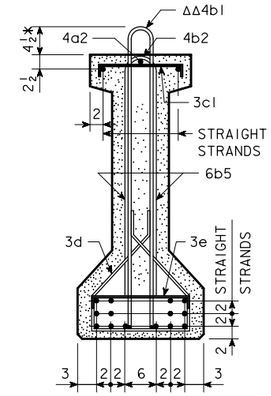

BEAM C63

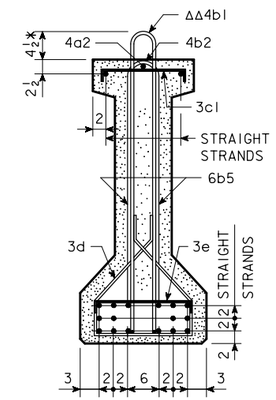

BEAM C67

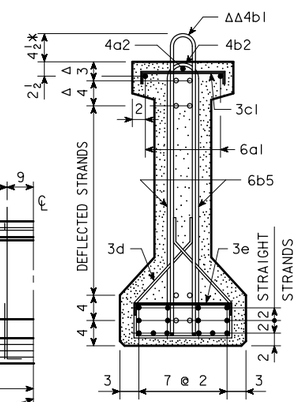

BEAM C71

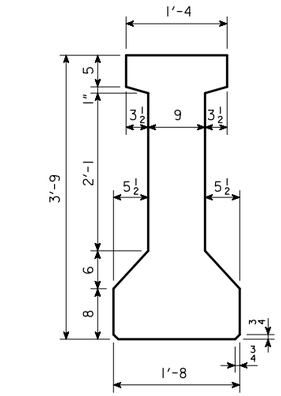

"C" BEAM CROSS SECTION

A = 564.5 in²
Yb = 20.23 in
I = 116,354 in⁴

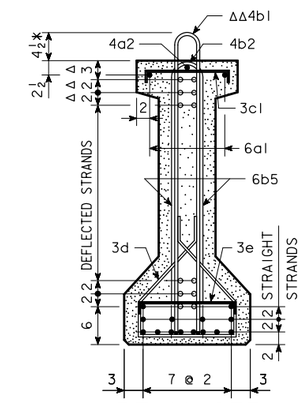

BEAM C75

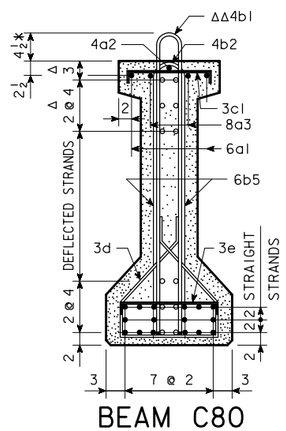

BEAM C80

NOTE: BARS 3d ARE TO BE PLACED IN PAIRS.

* KEEP

Δ DIMENSIONS AT END OF BEAM

ΔΔ EPOXY COATED BARS

LATEST REVISION DATE

APPROVED BY BRIDGE ENGINEER

IOWA DOT Highway Division

STANDARD DESIGN - 40' ROADWAY, THREE SPAN BRIDGE

PRETENSIONED PRESTRESSED CONCRETE BEAM BRIDGES

SEPTEMBER, 2014

C BEAM DETAILS

H40-37-14

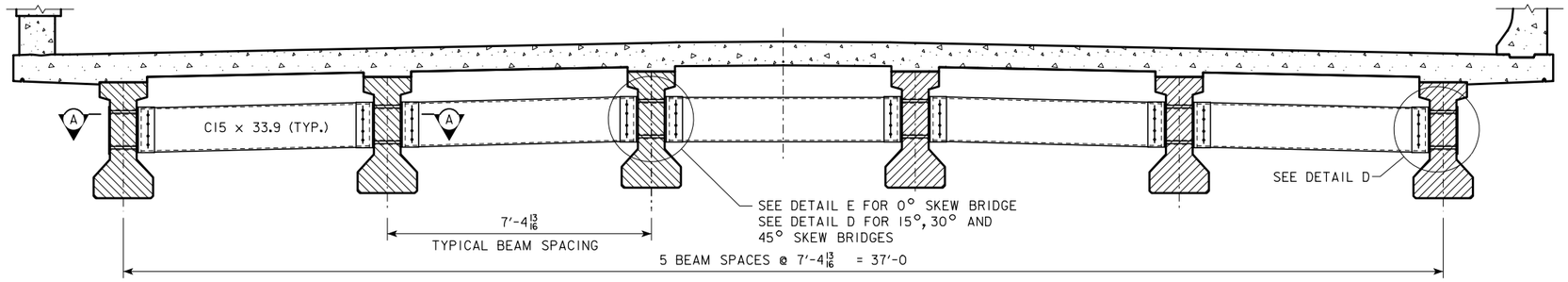

SECTION SHOWING INTERMEDIATE DIAPHRAGM

NOTES:

ALL DIAPHRAGM MATERIALS, INCLUDING BOLTS, NUTS AND WASHERS SHALL BE GALVANIZED.

SHOP DRAWINGS OF THE STEEL DIAPHRAGMS SHOWING LAYOUT AND DETAILS OF THE DIAPHRAGMS SHALL BE SUBMITTED FOR APPROVAL.

ALL COSTS FOR FURNISHING AND INSTALLING STEEL INTERMEDIATE DIAPHRAGMS SHALL BE INCLUDED IN THE PRICE BID FOR STRUCTURAL STEEL.

THE 1 1/2"Φ HOLES FOR THE 7/8"Φ H.S. BOLTS SHALL BE CAST INTO THE WEB. DRILLING IS NOT ALLOWED.

THE 7/8"Φ H.S. BOLTS THROUGH THE WEB SHALL HAVE A THREAD LENGTH OF 3" MIN. AND 4" MAX. AND SHALL MEET THE REQUIREMENTS OF ASTM A449.

ALL BOLTS ARE TO BE TIGHTENED PRIOR TO PLACING BRIDGE FLOOR CONCRETE.

CONCRETE DIAPHRAGM DETAILS SHALL BE PROVIDED IN THE BRIDGE PLANS FOR OVERHEAD BRIDGES. DESIGNER SHALL ADJUST THE CONCRETE, REINFORCING AND STRUCTURAL STEEL QUANTITIES ACCORDINGLY.

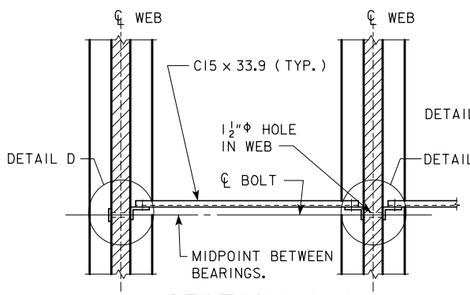

SECTION A-A
FOR 0° SKEW BRIDGES

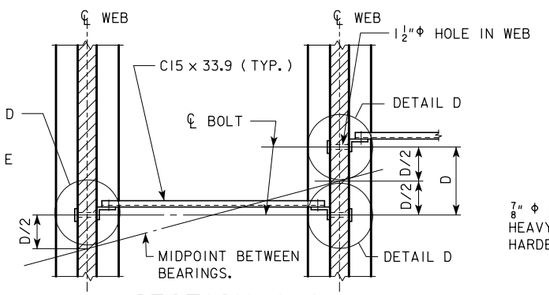

SECTION A-A
FOR 15°, 30° AND 45° SKEW BRIDGES

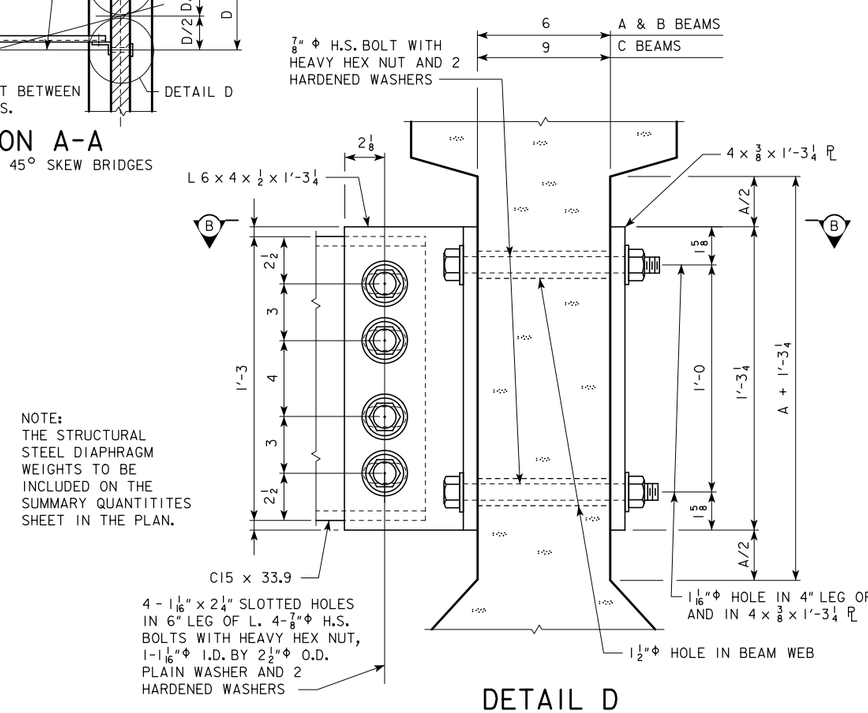

DETAIL D

NOTE:
THE STRUCTURAL STEEL DIAPHRAGM WEIGHTS TO BE INCLUDED ON THE SUMMARY QUANTITITES SHEET IN THE PLAN.

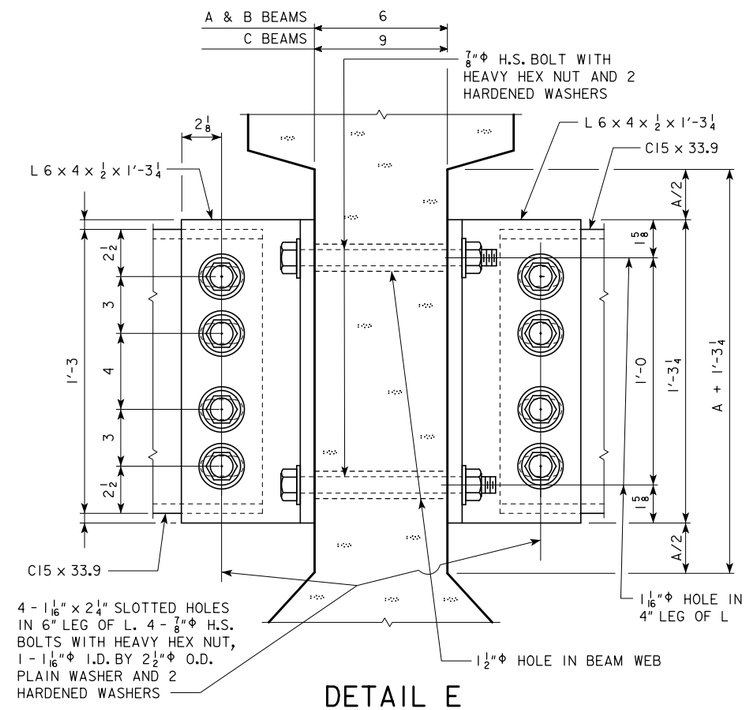

DETAIL E

INTERMEDIATE DIAPHRAGM STRUCTURAL STEEL

ONE CONNECTION DETAIL "E"

2 - 7/8"Φ x LENGTH H.S. BOLTS WITH NUTS AND WASHERS

WEB THICKNESS (IN.)	LENGTH OF H.S. BOLTS (IN.)	WEIGHT PER DETAIL "E" (LB.)	BRIDGE SKEW 0°	BRIDGE SKEW 15°, 30° & 45°	BRIDGE SKEW 0°	BRIDGE SKEW 15°, 30° & 45°
			NUMBER OF DETAIL "E"		WEIGHT (LB.)	
6	9	4.30	12	0	51.6	0.0
9	12	5.34	12	0	64.1	0.0
2 - L6 x 4 x 1/2 x 1'-3 1/4 = 41.2 LB			12	0	494.4	0.0

ONE CONNECTION DETAIL "D"

2 - 7/8"Φ x LENGTH H.S. BOLTS WITH NUTS AND WASHERS

WEB THICKNESS (IN.)	LENGTH OF H.S. BOLTS (IN.)	WEIGHT PER DETAIL "D" (LB.)	BRIDGE SKEW 0°	BRIDGE SKEW 15°, 30° & 45°	BRIDGE SKEW 0°	BRIDGE SKEW 15°, 30° & 45°
			NUMBER OF DETAIL "D"		WEIGHT (LB.)	
6	9	4.30	6	30	25.8	129.0
9	12	5.34	6	30	32.0	160.2
1 - BACKING PL 4 x 3/8 x 1'-3 1/4 = 6.5 LB			6	30	39.0	195.0
1 - L 6 x 4 x 1/2 x 1'-3 1/4 = 20.6 LB			6	30	123.6	618.0

* ONE C15 x 33.9 DIAPHRAGM

WEB THICKNESS (IN.)	BEAM SPACING	LENGTH	NO. OF DIAPH.	UNIT WEIGHT (LB.)	WEIGHT (LB.)
6	7'-4 13/16	6'-7 7/16	15	224.4	3366.2
9	7'-4 13/16	6'-4 7/16	15	215.9	3239.0

DIAPHRAGM CONNECTION BOLTS

	NO. OF DIAPH.	WEIGHT (LB.)
8 - 7/8"Φ x 0'-2 3/4 H.S. BOLTS WITH NUTS AND WASHERS, PER UNIT DIAPHRAGM = 10.3 LB	15	154.5

* THE LENGTH OF THE C15 x 33.9 IS BASED ON A VARIABLE CLEARANCE OF 1 11/16 TO 2 1/16 BETWEEN THE FACE OF BEAM WEB AND END OF C15 x 33.9.

TOTAL WEIGHT

	WEB THICKNESS (IN.)	BRIDGE SKEW 0°	BRIDGE SKEW 15°, 30° & 45°
INTERMEDIATE DIAPHR. STRUCT. STEEL - TOTAL (LB) =	6	4255	4463
INTERMEDIATE DIAPHR. STRUCT. STEEL - TOTAL (LB) =	9	4147	4367

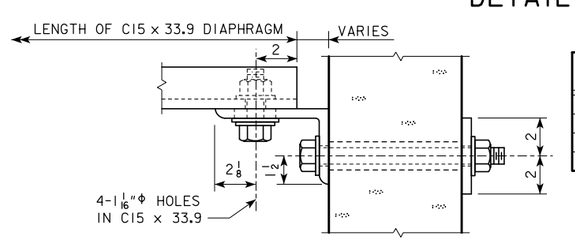

SECTION B-B

BEAM SERIES	DIMENSIONS A + 1'-3 1/4	DIMENSIONS A/2
A	1'-4	3/8
B	1'-8	2 3/8
C	2'-1	4 3/8

LATEST REVISION DATE

APPROVED BY BRIDGE ENGINEER

IOWA DOT Highway Division

STANDARD DESIGN - 40' ROADWAY, THREE SPAN BRIDGE

PRETENSIONED PRESTRESSED CONCRETE BEAM BRIDGES

SEPTEMBER, 2014

INTERMEDIATE STEEL DIAPHRAGMS

H40-38-14

TABLE OF BARRIER RAIL DIMENSIONS AND NUMBERS

℄-℄ ABUT. BRG		138′-10				151′-4				163′-10				176′-4				℄-℄ ABUT. BRG	
SKEW		0°	15°	30°	45°	0°	15°	30°	45°	0°	15°	30°	45°	0°	15°	30°	45°	SKEW	
DIMENSION OR NUMBER	L (FT.-IN.)	155′-10	155′-11 1/4	156′-3 5/8	157′-0 7/8	168′-4	168′-5 1/4	168′-9 5/8	169′-6 7/8	180′-10	180′-11 1/4	181′-3 5/8	182′-0 7/8	193′-4	193′-5 1/4	193′-9 5/8	194′-6 7/8	L (FT.-IN.)	DIMENSION OR NUMBER
	B (FT.-IN.)	141′-10	141′-11 1/4	142′-3 5/8	143′-0 7/8	154′-4	154′-5 1/4	154′-9 5/8	155′-6 7/8	166′-10	166′-11 1/4	167′-3 5/8	168′-0 7/8	179′-4	179′-5 1/4	179′-9 5/8	180′-6 7/8	B (FT.-IN.)	
	S (FT.-IN.)	141′-10	141′-11 1/4	142′-3 5/8	143′-0 7/8	154′-4	154′-5 1/4	154′-9 5/8	155′-6 7/8	166′-10	166′-11 1/4	167′-3 5/8	168′-0 7/8	179′-4	179′-5 1/4	179′-9 5/8	180′-6 7/8	S (FT.-IN.)	
	C	133	133	133	133	145	145	145	145	158	158	158	158	170	170	170	170	C	
	D (FT.-IN.)	133′-0	133′-0	133′-0	133′-0	145′-0	145′-0	145′-0	145′-0	158′-0	158′-0	158′-0	158′-0	170′-0	170′-0	170′-0	170′-0	D (FT.-IN.)	
	E	134	134	134	134	146	146	146	146	159	159	159	159	171	171	171	171	E	
	F (FT.-IN.)	0	0	0	0	0	0	0	0	0	0	0	0	0	0	0	0	F (FT.-IN.)	
	W (FT.-IN.)	3′-11	3′-11 5/8	4′-1 3/4	4′-6 1/2	4′-2	4′-2 5/8	4′-4 3/4	4′-9 1/2	3′-11	3′-11 5/8	4′-1 3/4	4′-6 1/2	4′-2	4′-2 5/8	4′-4 3/4	4′-9 1/2	W (FT.-IN.)	
	a	0	0	0	0	0	0	0	0	0	0	0	0	0	0	0	0	a	

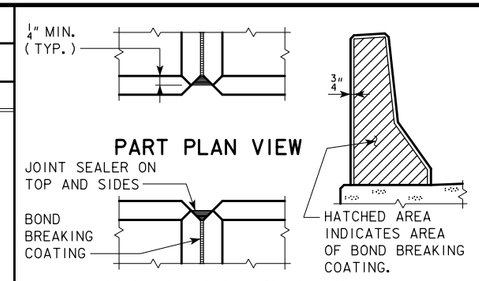

BARRIER RAIL JOINT DETAILS

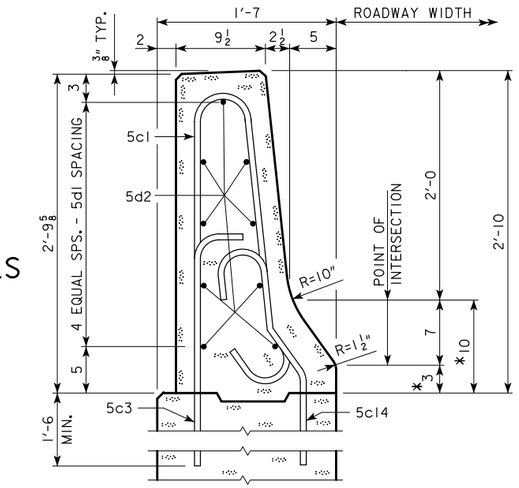

PART SECTION A-A

* DENOTES THE MAXIMUM VALUE FOR THIS DIMENSION. THIS DIMENSION MAY VARY DUE TO CONSTRUCTION INACCURACIES.

TABLE OF BARRIER RAIL DIMENSIONS AND NUMBERS

℄-℄ ABUT. BRG		188′-10				201′-4				213′-10				226′-4				243′-0				℄-℄ ABUT. BRG	
SKEW		0°	15°	30°	45°	0°	15°	30°	45°	0°	15°	30°	45°	0°	15°	30°	45°	0°	15°	30°	45°	SKEW	
DIMENSION OR NUMBER	L (FT.-IN.)	205′-10	205′-11 1/4	206′-3 5/8	207′-0 7/8	228′-4	228′-4	228′-4	228′-4	240′-10	240′-10	240′-10	240′-10	253′-4	253′-4	253′-4	253′-4	270′-0	270′-0	270′-0	270′-0	L (FT.-IN.)	DIMENSION OR NUMBER
	B (FT.-IN.)	191′-10	191′-11 1/4	192′-3 5/8	193′-0 7/8	214′-4	214′-4	214′-4	214′-4	226′-10	226′-10	226′-10	226′-10	239′-4	239′-4	239′-4	239′-4	256′-0	256′-0	256′-0	256′-0	B (FT.-IN.)	
	S (FT.-IN.)	191′-10	191′-11 1/4	192′-3 5/8	193′-0 7/8	204′-4	204′-5 1/4	204′-9 5/8	205′-6 7/8	216′-10	216′-11 1/4	217′-3 5/8	218′-0 7/8	229′-4	229′-5 1/4	229′-9 5/8	230′-6 7/8	246′-0	246′-1 1/4	246′-5 5/8	247′-2 7/8	S (FT.-IN.)	
	C	183	183	183	183	195	195	195	195	208	208	208	208	220	220	220	220	237	237	237	237	C	
	D (FT.-IN.)	183′-0	183′-0	183′-0	183′-0	195′-0	195′-0	195′-0	195′-0	208′-0	208′-0	208′-0	208′-0	220′-0	220′-0	220′-0	220′-0	237′-0	237′-0	237′-0	237′-0	D (FT.-IN.)	
	E	184	184	184	184	196	196	196	196	209	209	209	209	221	221	221	221	238	238	238	238	E	
	F (FT.-IN.)	0	0	0	0	5′-0	4′-11 3/8	4′-9 1/4	4′-4 1/2	5′-0	4′-11 3/8	4′-9 1/4	4′-4 1/2	5′-0	4′-11 3/8	4′-9 1/4	4′-4 1/2	5′-0	4′-11 3/8	4′-9 1/4	4′-4 1/2	F (FT.-IN.)	
	W (FT.-IN.)	3′-11	3′-11 5/8	4′-1 3/4	4′-6 1/2	4′-2	4′-2 5/8	4′-4 3/4	4′-9 1/2	3′-11	3′-11 5/8	4′-1 3/4	4′-6 1/2	4′-2	4′-2 5/8	4′-4 3/4	4′-9 1/2	4′-0	4′-0 5/8	4′-2 3/4	4′-7 1/2	W (FT.-IN.)	
	a	0	0	0	0	5	5	5	5	5	5	5	5	5	5	5	5	5	5	5	5	a	

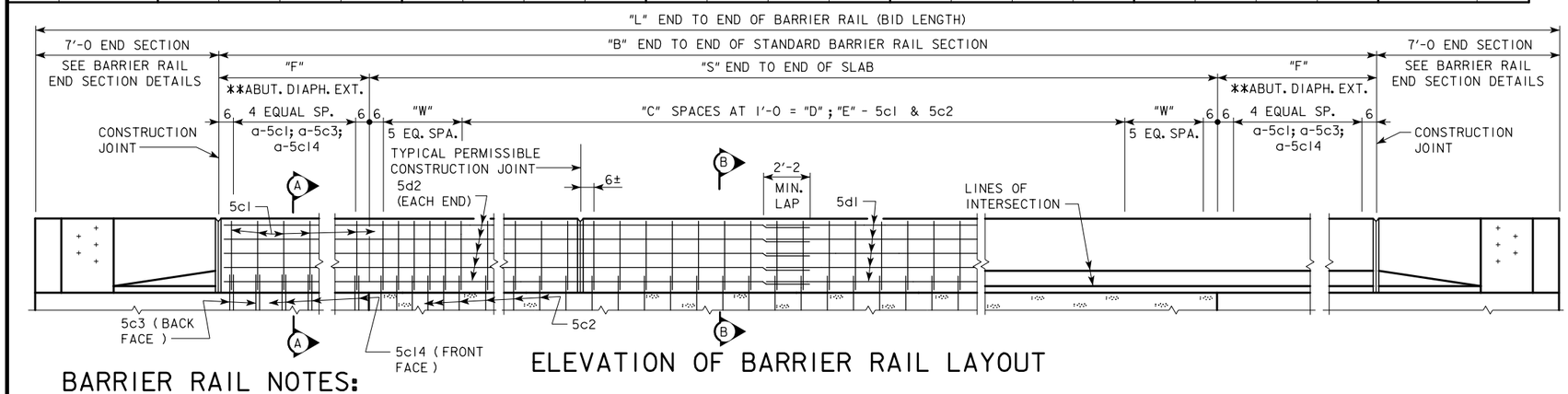

ELEVATION OF BARRIER RAIL LAYOUT

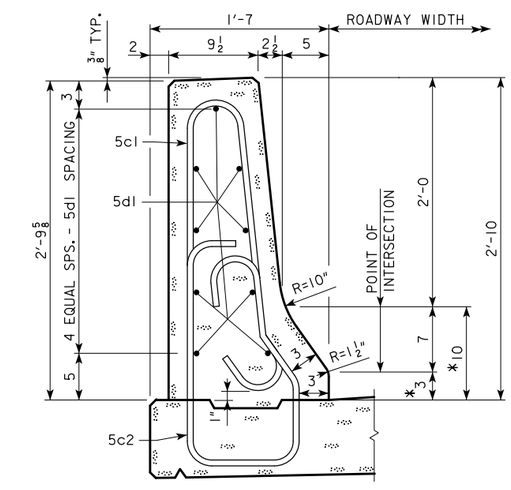

PART SECTION B-B

** APPLIES TO 201′-4, 213′-10, 226′-4 & 243′-0 BRIDGES ONLY.

BARRIER RAIL NOTES:

MINIMUM CLEAR DISTANCE FROM FACE OF CONCRETE TO NEAR REINFORCING BAR IS TO BE 2" UNLESS OTHERWISE NOTED OR SHOWN.

THE PERMISSIBLE CONSTRUCTION JOINTS ARE TO BE PLACED BETWEEN VERTICAL BARS AT A MINIMUM SPACING OF 20 FEET. CONSTRUCTION JOINT CONTACT SURFACES ARE TO BE COATED WITH AN APPROVED BOND BREAKER.

COST OF THE JOINT SEALER AND BOND BREAKER SHALL BE CONSIDERED INCIDENTAL TO OTHER CONSTRUCTION.

THE CONCRETE BARRIER RAIL IS TO BE BID ON A LINEAL FOOT BASIS. THE NUMBER OF LINEAL FEET OF BARRIER RAIL INSTALLED WILL BE PAID FOR AT THE CONTRACT PRICE PER LINEAL FOOT BASED ON PLAN QUANTITIES. PRICE BID FOR CONCRETE BARRIER RAILING SHALL BE FULL COMPENSATION FOR FURNISHING ALL MATERIAL, EXCLUDING REINFORCING STEEL, AND ALL OF THE EQUIPMENT AND LABOR REQUIRED TO ERECT THE RAIL IN ACCORDANCE WITH THESE PLANS AND CURRENT SPECIFICATIONS.

IF CONDUIT IS REQUIRED IN THIS PLAN THE RIGID STEEL CONDUIT, JUNCTION BOXES AND FITTINGS INCLUDING LABOR AND ANY ADDITIONAL WORK TO DO THE INSTALLATION IS CONSIDERED INCIDENTAL TO THE COST OF THE RAILING.

ALL BARRIER RAIL REINFORCING STEEL IS TO BE INCLUDED ON THE SUMMARY QUANTITIES SHEET IN THE PLAN.

ALL BARRIER RAIL REINFORCING STEEL IS TO BE EITHER EPOXY COATED OR STAINLESS STEEL AS SHOWN OR NOTED. THE STAINLESS STEEL REINFORCING STEEL SHALL BE DEFORMED BAR GRADE 60 MEETING THE REQUIREMENTS OF MATERIALS I.M.452.

THE JOINT SEALER SHALL BE LIGHT GRAY NONSAG LATEX CAULKING SEALER MARKETED FOR OUTDOOR USE. NO TESTING OR CERTIFICATION IS REQUIRED.

TOP OF THE BARRIER RAIL IS TO BE PARALLEL TO THE THEORETICAL ℄ GRADE.

CROSS SECTIONAL AREA OF THE STANDARD SECTION OF THE BARRIER RAIL = 2.84 SQUARE FEET.

CONCRETE BARRIER RAILS PLACED USING THE SLIPFORM METHOD WILL REQUIRE THE USE OF A CLASS BR CONCRETE IN ACCORDANCE WITH ARTICLE 2513.03, A, 2, OF THE STANDARD SPECIFICATIONS. CAST-IN-PLACE BARRIER RAILS SHALL USE CLASS C MIX. CLASS D CONCRETE IS NOT PERMITTED FOR CONCRETE BARRIER RAILS (CAST-IN-PLACE OR SLIPFORMED METHOD).

LATEST REVISION DATE

APPROVED BY BRIDGE ENGINEER

IOWA DOT Highway Division

STANDARD DESIGN - 40′ ROADWAY, THREE SPAN BRIDGE

PRETENSIONED PRESTRESSED CONCRETE BEAM BRIDGES

SEPTEMBER, 2014

BARRIER RAIL DETAILS

SHEET 1 OF 3

H40-39-14

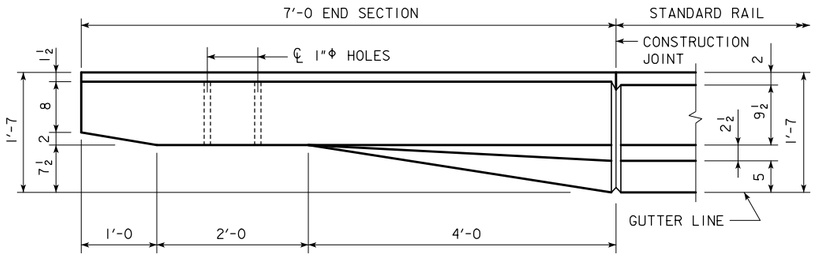

PART PLAN VIEW

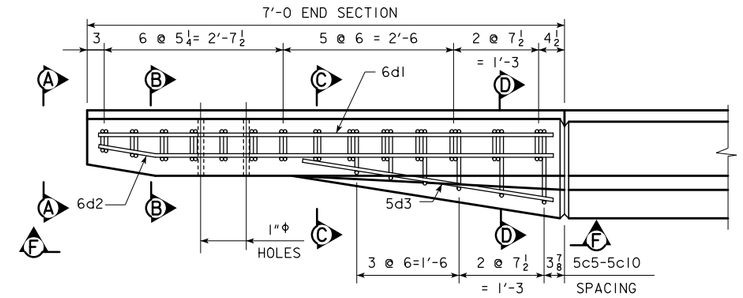

PART VIEW E-E

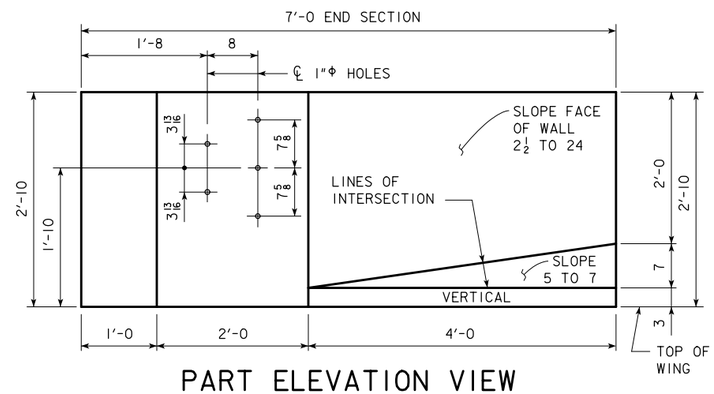

PART ELEVATION VIEW

PROVIDE 5 HOLES FORMED WITH 1"Φ PLASTIC CONDUIT. COST TO BE INCLUDED IN PRICE BID FOR CONCRETE BARRIER RAILING.

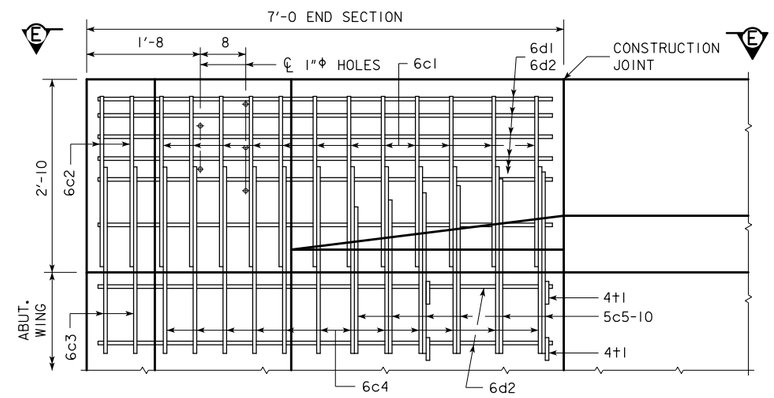

PART VIEW F-F

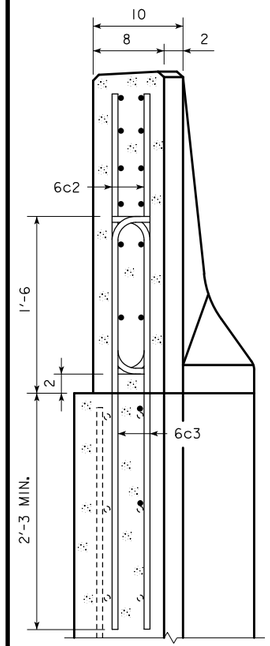

VIEW A-A

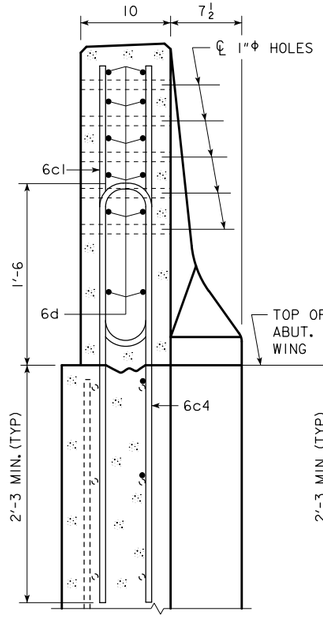

SECTION B-B

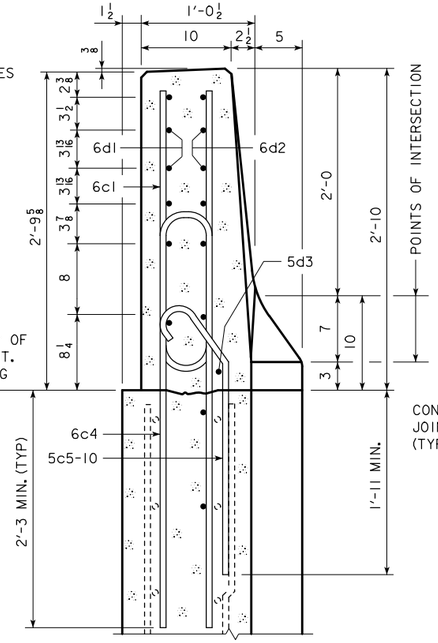

SECTION C-C

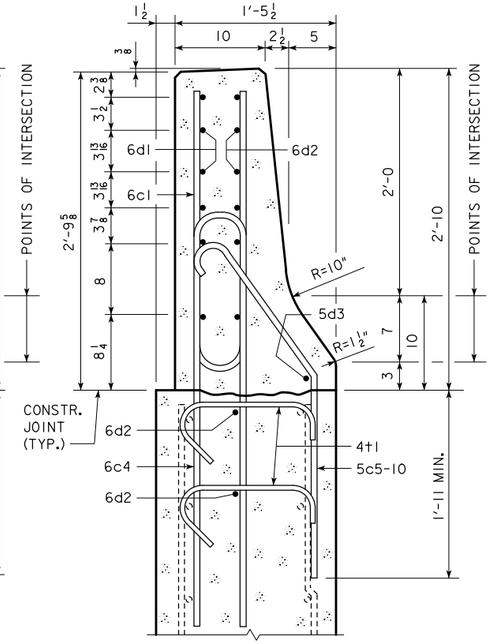

SECTION D-D

NOTE:
4t1 PLACEMENT- 2 BARS EACH LEVEL OF 6d2 IN WING FOOTING.

NOTE:
CONSTRUCTION JOINT BETWEEN TOP OF WING AND BARRIER RAIL IS ROUGHENED CONCRETE.

NOTE:
THE 10" RADIUS AND 1½" RADIUS ARE TYPICAL AND SHALL BE USED WHEN CONSTRUCTING THE CORNERS FOR VIEW A-A, SECTION B-B, SECTION C-C AND SECTION D-D.

NOTE:
THE 6c4, 6c3, 5c5-10, 2 - 6d2 & 4t1 BARS ARE TO BE PLACED WITH THE ABUTMENT WING. THE DETAILS FOR PLACEMENT ARE SHOWN ON THE WING ABUTMENT SHEET.

NOTE:
DASHED LINES BELOW THE TOP OF WING ARE THE ABUTMENT WING REINFORCING STEEL. SEE WING ABUTMENT SHEET FOR PLACEMENT.

EPOXY REINFORCING STEEL - ONE END SECTION

BAR	LOCATION	SHAPE	NO.	LENGTH	WEIGHT
6c1	VERTICAL	⊓	12	5'-6	99
6c2	VERTICAL	⌈	4	2'-10	17
6d1	HORIZONTAL	—	6	6'-8	60
6d2	HORIZONTAL	⟋	8	6'-9	81
5d3	HORIZONTAL	—	1	3'-9	4
4t1	ABUTMENT WING TIE BARS	⊓	4	VARIES	5
				EPOXY COATED TOTAL WEIGHT (LBS.)	266

STAINLESS REINFORCING STEEL - ONE END SECTION

BAR	LOCATION	SHAPE	NO.	LENGTH	WEIGHT
6c3	VERTICAL	⌈	4	4'-1	25
6c4	VERTICAL	⊓	12	8'-0	144
5c5-10	VERTICAL	⌒	6	VARIES	23
				STAINLESS STEEL TOTAL WEIGHT (LBS.)	192

NOTE: REINFORCING STEEL QUANTITIES ARE TO BE INCLUDED ON THE SUMMARY QUANTITIES SHEET IN THE PLAN.

CONCRETE PLACEMENT SUMMARY

SECTION	TOTAL
BARRIER RAIL ONE END SECTION	0.65 CU. YD.

BENT BAR DETAILS

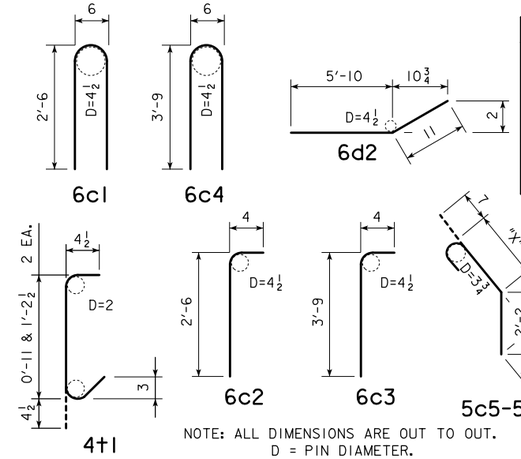

BAR	"X"
5c5	0'-6½
5c6	0'-8½
5c7	0'-10¼
5c8	1'-0¼
5c9	1'-2
5c10	1'-4

LATEST REVISION DATE

APPROVED BY BRIDGE ENGINEER

IOWA DOT Highway Division

STANDARD DESIGN - 40' ROADWAY, THREE SPAN BRIDGE

PRETENSIONED PRESTRESSED CONCRETE BEAM BRIDGES

SEPTEMBER, 2014

BARRIER RAIL END SECTION DETAILS

SHEET 2 OF 3

H40-40-14

EPOXY COATED REINFORCING STEEL-TWO BARRIER RAILS

(NOTE: THESE REINFORCING BARS TO BE USED ON ALL SKEWS)

BRIDGE LENGTH				138'-10			151'-4			163'-10			176'-4			188'-10			201'-4			213'-10			226'-4			243'-0		
SECTION	BAR	LOCATION	SHAPE	NO.	LENGTH	WEIGHT	NO.	LENGTH	WEIGHT	NO.	LENGTH	WEIGHT	NO.	LENGTH	WEIGHT	NO.	LENGTH	WEIGHT	NO.	LENGTH	WEIGHT	NO.	LENGTH	WEIGHT	NO.	LENGTH	WEIGHT	NO.	LENGTH	WEIGHT
STANDARD SECTION	5c1	VERTICAL		288	5'-11	1,777	312	5'-11	1,925	338	5'-11	2,086	362	5'-11	2,234	388	5'-11	2,394	432	5'-11	2,666	458	5'-11	2,826	482	5'-11	2,974	516	5'-11	3,184
	5d1	LONGITUDINAL-STANDARD SECTION	——	36	40'-0	1,502	54	40'-0	2,253	54	40'-0	2,253	54	40'-0	2,253	72	40'-0	3,004	72	40'-0	3,004	72	40'-0	3,004	90	40'-0	3,755	90	40'-0	3,755
	5d2	LONGITUDINAL-STANDARD SECTION, ENDS	——	36	34'-8	1,302	36	22'-0	826	36	28'-3	1,061	36	34'-6	1,295	36	21'-10	820	36	32'-5	1,217	36	38'-8	1,452	36	26'-0	976	36	34'-4	1,289
EPOXY COATED REINFORCING STEEL TOTAL LBS.						4,581			5,004			5,400			5,782			6,218			6,887			7,282			7,705			8,228

STAINLESS STEEL REINFORCING STEEL-TWO BARRIER RAILS

(NOTE: THESE REINFORCING BARS TO BE USED ON ALL SKEWS)

BRIDGE LENGTH				138'-10			151'-4			163'-10			176'-4			188'-10			201'-4			213'-10			226'-4			243'-0		
SECTION	BAR	LOCATION	SHAPE	NO.	LENGTH	WEIGHT	NO.	LENGTH	WEIGHT	NO.	LENGTH	WEIGHT	NO.	LENGTH	WEIGHT	NO.	LENGTH	WEIGHT	NO.	LENGTH	WEIGHT	NO.	LENGTH	WEIGHT	NO.	LENGTH	WEIGHT	NO.	LENGTH	WEIGHT
STANDARD SECTION	5c2	VERTICAL		288	6'-0	1,802	312	6'-0	1,952	338	6'-0	2,115	362	6'-0	2,265	388	6'-0	2,428	412	6'-0	2,578	438	6'-0	2,741	462	6'-0	2,891	496	6'-0	3,104
	5c3	VERTICAL		-----	-----	0	-----	-----	0	-----	-----	0	-----	-----	0	-----	-----	0	20	3'-3	68	20	3'-3	68	20	3'-3	68	20	3'-3	68
	5c14	VERTICAL		-----	-----	0	-----	-----	0	-----	-----	0	-----	-----	0	-----	-----	0	20	3'-10	80	20	3'-10	80	20	3'-10	80	20	3'-10	80
STAINLESS STEEL REINFORCING STEEL TOTAL LBS.						1,802			1,952			2,115			2,265			2,428			2,726			2,889			3,039			3,252

BENT BAR DETAILS

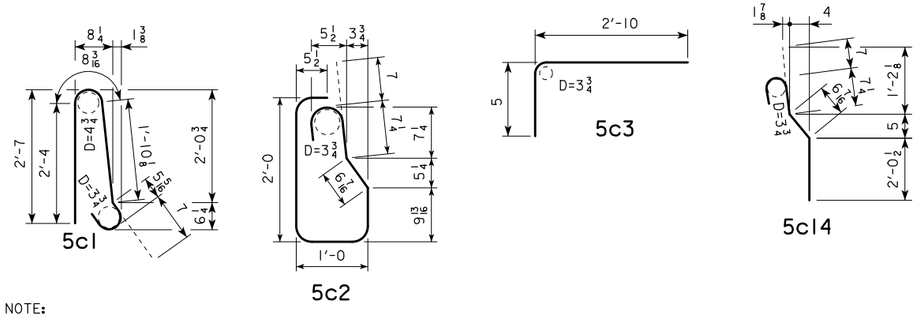

NOTE:
ALL DIMENSIONS ARE OUT TO OUT. D = PIN DIAMETER.

NOTE: REINFORCING STEEL QUANTITIES ARE TO BE INCLUDED ON THE SUMMARY QUANTITIES SHEET IN THE PLAN.

CONCRETE PLACEMENT SUMMARY - C.Y.

BRIDGE LENGTH		138'-10	151'-4	163'-10	176'-4	188'-10	201'-4	213'-10	226'-4	243'-0
STANDARD SECTION *	2 × "B" @ 0.1052 C.Y. PER FT.	30.1	32.7	35.4	38.0	40.6	45.1	47.7	50.4	53.9
BARRIER RAIL END SECTION	4 @ 0.65 C.Y.	2.6	2.6	2.6	2.6	2.6	2.6	2.6	2.6	2.6
TOTAL C.Y.		32.7	35.3	38.0	40.6	43.2	47.7	50.3	53.0	56.5

* SEE SHEET H40-39-14 FOR DIMENSION "B". CONCRETE QUANTITIES SHOWN ARE BASED ON 45° SKEW BID LENGTHS.

CONCRETE BARRIER RAIL QUANTITIES - L.F.

BRIDGE LENGTH		138'-10	151'-4	163'-10	176'-4	188'-10	201'-4	213'-10	226'-4	243'-0
CONCRETE BARRIER RAILING	0° SKEW	311.7	336.7	361.7	386.7	411.7	456.7	481.7	506.7	540.0
CONCRETE BARRIER RAILING	15° SKEW	311.9	336.9	361.9	386.9	411.9	456.7	481.7	506.7	540.0
CONCRETE BARRIER RAILING	30° SKEW	312.6	337.6	362.6	387.6	412.6	456.7	481.7	506.7	540.0
CONCRETE BARRIER RAILING	45° SKEW	314.2	339.2	364.2	389.2	414.2	456.7	481.7	506.7	540.0

LATEST REVISION DATE

APPROVED BY BRIDGE ENGINEER

IOWA DOT Highway Division

STANDARD DESIGN - 40' ROADWAY, THREE SPAN BRIDGE

PRETENSIONED PRESTRESSED CONCRETE BEAM BRIDGES

SEPTEMBER, 2014

BARRIER RAIL DETAILS

SHEET 3 OF 3

H40-41-14

TABLE OF OPEN RAIL DIMENSIONS AND NUMBERS

℄-℄ ABUT. BRG		138′-10				151′-4				163′-10				176′-4				188′-10				℄-℄ ABUT. BRG	
SKEW		0°	15°	30°	45°	0°	15°	30°	45°	0°	15°	30°	45°	0°	15°	30°	45°	0°	15°	30°	45°	SKEW	
DIMENSION OR NUMBER	L (FT.-IN.)	155′-10	155′-11 1/4	156′-3 5/8	157′-0 7/8	168′-4	168′-5 1/4	168′-9 5/8	169′-6 7/8	180′-10	180′-11 1/4	181′-3 5/8	182′-0 7/8	193′-4	193′-5 1/4	193′-9 5/8	194′-6 7/8	205′-10	205′-11 1/4	206′-3 5/8	207′-0 7/8	L (FT.-IN.)	DIMENSION OR NUMBER
	S (FT.-IN.)	141′-10	141′-11 1/4	142′-3 5/8	143′-0 7/8	154′-4	154′-5 1/4	154′-9 5/8	155′-6 7/8	166′-10	166′-11 1/4	167′-3 5/8	168′-0 7/8	179′-4	179′-5 1/4	179′-9 5/8	180′-6 7/8	191′-10	191′-11 1/4	192′-3 5/8	193′-0 7/8	S (FT.-IN.)	
	B	18	18	18	18	19	19	19	19	21	21	21	21	23	23	23	23	24	24	24	24	B	
	C (FT.-IN.)	7′-7 7/8	7′-8	7′-8 1/4	7′-8 3/4	7′-11	7′-11	7′-11 1/4	7′-11 3/4	7′-9	7′-9 1/8	7′-9 3/8	7′-9 3/4	7′-7 1/2	7′-7 1/2	7′-7 3/4	7′-8 1/8	7′-9 7/8	7′-10	7′-10 1/8	7′-10 1/2	C (FT.-IN.)	
	D (FT.-IN.)	137′-10	137′-11 1/4	138′-3 5/8	139′-0 7/8	150′-4	150′-5 1/4	150′-9 5/8	151′-6 7/8	162′-10	162′-11 1/4	163′-3 5/8	164′-0 7/8	175′-4	175′-5 1/4	175′-9 5/8	176′-6 7/8	187′-10	187′-11 1/4	188′-3 5/8	189′-0 7/8	D (FT.-IN.)	
	E	17	17	17	17	18	18	18	18	20	20	20	20	22	22	22	22	23	23	23	23	E	
	F (FT.-IN.)	0	0	0	0	0	0	0	0	0	0	0	0	0	0	0	0	0	0	0	0	F (FT.-IN.)	

TABLE OF OPEN RAIL DIMENSIONS AND NUMBERS

℄-℄ ABUT. BRG		201′-4				213′-10				226′-4				243′-0				℄-℄ ABUT. BRG	
SKEW		0°	15°	30°	45°	0°	15°	30°	45°	0°	15°	30°	45°	0°	15°	30°	45°	SKEW	
DIMENSION OR NUMBER	L (FT.-IN.)	228′-4	228′-4	228′-4	228′-4	240′-10	240′-10	240′-10	240′-10	253′-4	253′-4	253′-4	253′-4	270′-0	270′-0	270′-0	270′-0	L (FT.-IN.)	DIMENSION OR NUMBER
	S (FT.-IN.)	204′-4	204′-5 1/4	204′-9 5/8	205′-6 7/8	216′-10	216′-11 1/4	217′-3 5/8	218′-0 7/8	229′-4	229′-5 1/4	229′-9 5/8	230′-6 7/8	246′-0	246′-1 1/4	246′-5 5/8	247′-2 7/8	S (FT.-IN.)	
	B	26	26	26	26	27	27	27	27	29	29	29	29	31	31	31	31	B	
	C (FT.-IN.)	7′-8 1/2	7′-8 1/2	7′-8 5/8	7′-9	7′-10 5/8	7′-10 5/8	7′-10 3/4	7′-11 1/8	7′-9 1/4	7′-9 1/4	7′-9 3/8	7′-9 3/4	7′-9 5/8	7′-9 3/4	7′-9 7/8	7′-10 1/8	C (FT.-IN.)	
	D (FT.-IN.)	200′-4	200′-5 1/4	200′-9 5/8	201′-6 7/8	212′-10	212′-11 1/4	213′-3 5/8	214′-0 7/8	225′-4	225′-5 1/4	225′-9 5/8	226′-6 7/8	242′-0	242′-1 1/4	242′-5 5/8	243′-2 7/8	D (FT.-IN.)	
	E	25	25	25	25	26	26	26	26	28	28	28	28	30	30	30	30	E	
	F (FT.-IN.)	5′-0	4′-11 3/8	4′-9 1/4	4′-4 1/2	5′-0	4′-11 3/8	4′-9 1/4	4′-4 1/2	5′-0	4′-11 3/8	4′-9 1/4	4′-4 1/2	5′-0	4′-11 3/8	4′-9 1/4	4′-4 1/2	F (FT.-IN.)	

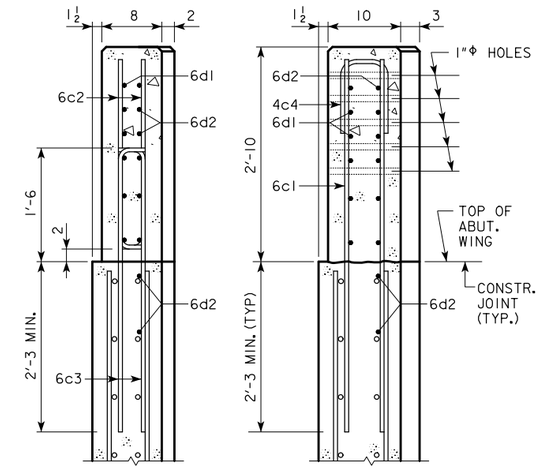

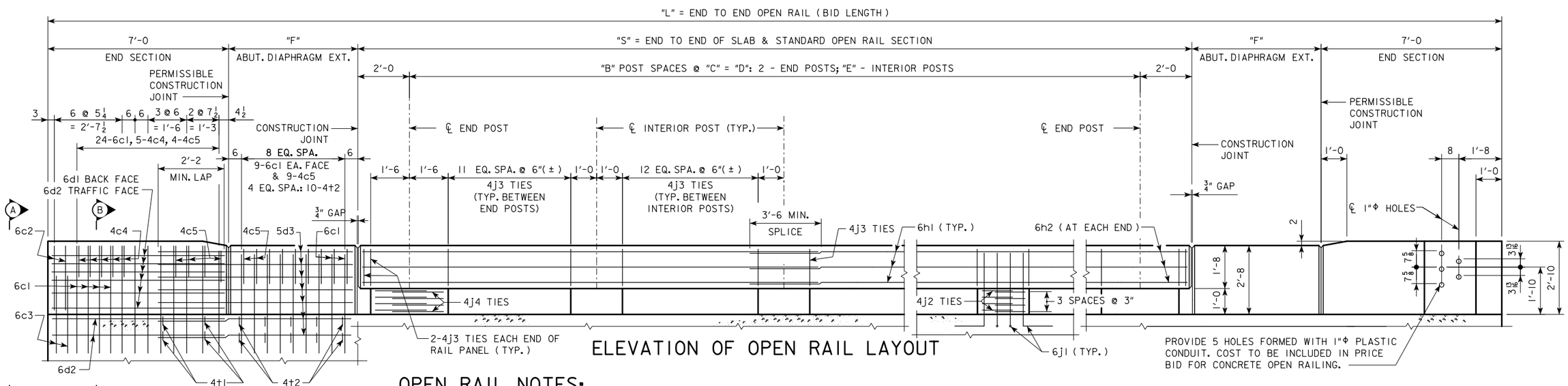

ELEVATION OF OPEN RAIL LAYOUT

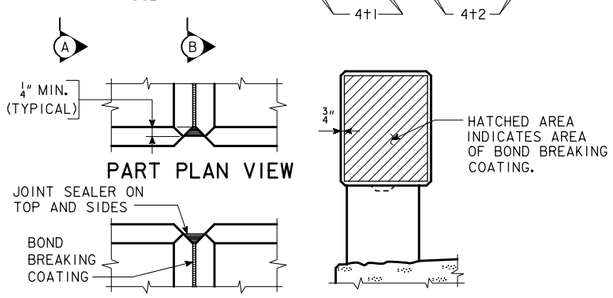

JOINT DETAILS AT END SECTION

OPEN RAIL NOTES:

CONSTRUCTION JOINT BETWEEN TOP OF WING AND RAIL IS ROUGHENED CONCRETE.

MINIMUM CLEAR DISTANCE FROM FACE OF CONCRETE TO NEAR REINFORCING BAR IS TO BE 2" UNLESS OTHERWISE NOTED OR SHOWN.

COST OF THE JOINT SEALER AND BOND BREAKER SHALL BE CONSIDERED INCIDENTAL TO OTHER CONSTRUCTION.

THE CONCRETE OPEN RAIL IS TO BE BID ON A LINEAL FOOT BASIS MEASURED FROM END TO END OF RAIL. THE NUMBER OF LINEAL FEET OF OPEN RAIL INSTALLED WILL BE PAID FOR AT THE CONTRACT PRICE PER LINEAL FOOT. PRICE BID FOR "CONCRETE OPEN RAILING, TL-4" SHALL BE FULL COMPENSATION FOR FURNISHING ALL MATERIAL, EXCLUDING REINFORCING STEEL, AND ALL OF THE EQUIPMENT AND LABOR REQUIRED TO CONSTRUCT THE RAIL IN ACCORDANCE WITH THESE PLANS AND CURRENT SPECIFICATIONS.

ALL OPEN RAIL REINFORCING STEEL IS TO BE INCLUDED ON THE SUMMARY QUANTITIES SHEET IN THE PLAN.

ALL OPEN RAIL REINFORCING STEEL IS TO BE EITHER EPOXY COATED OR STAINLESS STEEL AS SHOWN OR NOTED. THE STAINLESS STEEL REINFORCING STEEL SHALL BE DEFORMED BAR GRADE 60 MEETING THE REQUIREMENTS OF MATERIALS I.M.452.

THE CAST-IN-PLACE OPEN RAIL SHALL USE CLASS C MIX. CLASS D CONCRETE IS NOT PERMITTED.

TOP OF THE OPEN RAIL IS TO BE PARALLEL TO THEORETICAL ℄ GRADE.

IF CONDUIT IS REQUIRED IN THIS PLAN THE RIGID STEEL CONDUIT, JUNCTION BOXES AND FITTINGS INCLUDING LABOR AND ANY ADDITIONAL WORK TO DO THE INSTALLATION IS CONSIDERED INCIDENTAL TO THE COST OF THE RAILING.

LATEST REVISION DATE

APPROVED BY BRIDGE ENGINEER

IOWA DOT Highway Division

STANDARD DESIGN - 40′ ROADWAY, THREE SPAN BRIDGE

PRETENSIONED PRESTRESSED CONCRETE BEAM BRIDGES

SEPTEMBER, 2014

OPEN RAIL, TL-4 DETAILS

SHEET 1 OF 2

H40-42-14

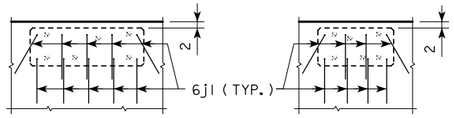

PART PLAN VIEW

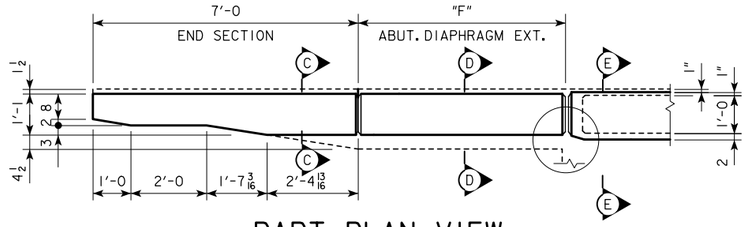

PART PLAN VIEW

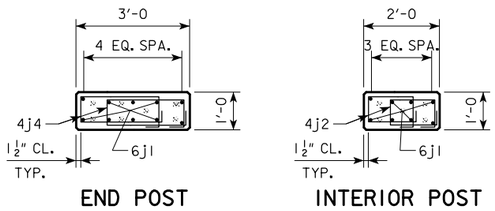

PART PLAN SECTION

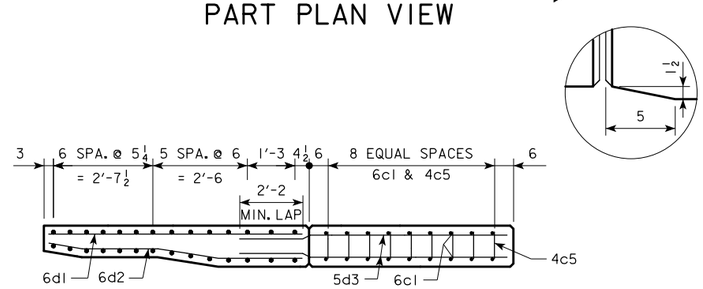

PART PLAN SECTION

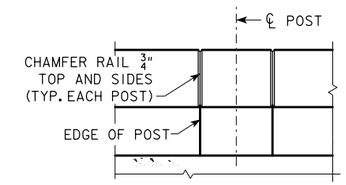

RAIL CHAMFER DETAIL

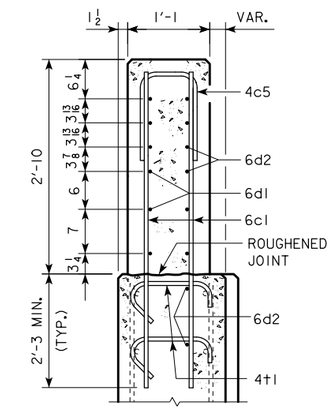

SECTION C-C

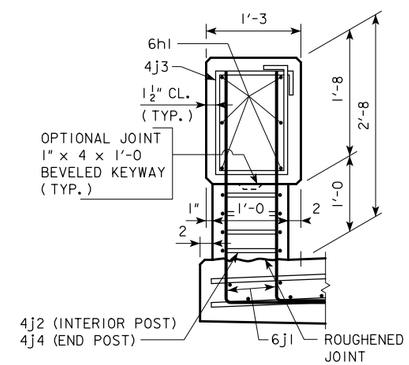

PART SECTION E-E

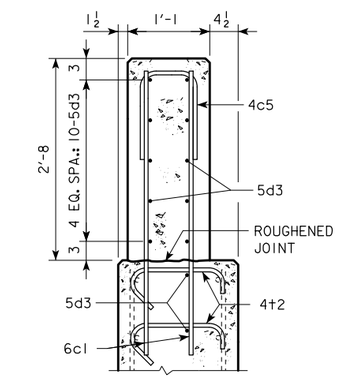

SECTION D-D

LATEST REVISION DATE

APPROVED BY BRIDGE ENGINEER

IOWA DOT Highway Division

STANDARD DESIGN - 40' ROADWAY, THREE SPAN BRIDGE

PRETENSIONED PRESTRESSED CONCRETE BEAM BRIDGES

SEPTEMBER, 2014

OPEN RAIL, TL-4 DETAILS

SHEET 2 OF 2

H40-43-14

EPOXY COATED REINFORCING STEEL-TWO OPEN RAILS (NOTE: THESE REINFORCING BARS TO BE USED ON ALL SKEWS)

BRIDGE LENGTH			138'-10			151'-4			163'-10			176'-4			188'-10			201'-4			213'-10			226'-4			243'-0		
BAR	LOCATION	SHAPE	NO.	LENGTH	WEIGHT	NO.	LENGTH	WEIGHT	NO.	LENGTH	WEIGHT	NO.	LENGTH	WEIGHT	NO.	LENGTH	WEIGHT	NO.	LENGTH	WEIGHT	NO.	LENGTH	WEIGHT	NO.	LENGTH	WEIGHT	NO.	LENGTH	WEIGHT
6c2	VERTICAL, END SECTION		16	2'-10	68	16	2'-10	68	16	2'-10	68	16	2'-10	68	16	2'-10	68	16	2'-10	68	16	2'-10	68	16	2'-10	68	16	2'-10	68
4c4	VERTICAL HOOPS, END SECTION		20	2'-10	38	20	2'-10	38	20	2'-10	38	20	2'-10	38	20	2'-10	38	20	2'-10	38	20	2'-10	38	20	2'-10	38	20	2'-10	38
4c5	VERT. HOOPS, END SEC. & ABUT. DIAPH. EXT.		16	3'-1	33	16	3'-1	33	16	3'-1	33	16	3'-1	33	16	3'-1	33	52	3'-1	107	52	3'-1	107	52	3'-1	107	52	3'-1	107
6d1	HORIZONTAL, END SECTION-BACK FACE		24	6'-8	240	24	6'-8	240	24	6'-8	240	24	6'-8	240	24	6'-8	240	24	6'-8	240	24	6'-8	240	24	6'-8	240	24	6'-8	240
6d2	HORIZONTAL, END SECTION-TRAFFIC FACE		32	6'-9	324	32	6'-9	324	32	6'-9	324	32	6'-9	324	32	6'-9	324	32	11'-2	537	32	11'-2	537	32	11'-2	537	32	11'-2	537
5d3 *	HORIZONTAL, ABUT. DIAPH. EXT.-BOTH FACES		—	—	—	—	—	—	—	—	—	—	—	—	—	—	—	48	7'-2	359	48	7'-2	359	48	7'-2	359	48	7'-2	359
6h1	LONGITUDINAL, OPEN RAIL		24	40'-0	1,442	36	40'-0	2,163	36	40'-0	2,163	36	40'-0	2,163	48	40'-0	2,884	48	40'-0	2,884	48	40'-0	2,884	60	40'-0	3,605	60	40'-0	3,605
6h2	LONGITUDINAL, OPEN RAIL, ENDS		24	36'-8	1,322	24	24'-8	889	24	30'-11	1,114	24	37'-2	1,340	24	25'-2	907	24	31'-5	1,133	24	37'-8	1,358	24	25'-8	925	24	34'-0	1,226
4j2	HOOP, INTERIOR POST		272	4'-9	863	288	4'-9	914	320	4'-9	1,015	352	4'-9	1,117	368	4'-9	1,168	400	4'-9	1,269	416	4'-9	1,320	448	4'-9	1,422	480	4'-9	1,523
4j3	HOOP, OPEN RAIL		472	5'-5	1,708	498	5'-5	1,802	550	5'-5	1,990	602	5'-5	2,178	628	5'-5	2,272	680	5'-5	2,460	706	5'-5	2,555	758	5'-5	2,743	810	5'-5	2,931
4j4	HOOP, END POST		32	6'-7	141	32	6'-7	141	32	6'-7	141	32	6'-7	141	32	6'-7	141	32	6'-7	141	32	6'-7	141	32	6'-7	141	32	6'-7	141
4t1	WING FOOTING TIE BARS		16	VARIES	19	16	VARIES	19	16	VARIES	19	16	VARIES	19	16	VARIES	19	16	VARIES	19	16	VARIES	19	16	VARIES	19	16	VARIES	19
4t2	WING FOOTING TIE BARS		—	—	—	—	—	—	—	—	—	—	—	—	—	—	—	40	1'-11	51	40	1'-11	51	40	1'-11	51	40	1'-11	51
	EPOXY COATED REINFORCING STEEL TOTAL LBS.				6,198			6,631			7,145			7,661			8,094			9,306			9,677			10,255			10,845

* TRAFFIC FACE 5d3 BARS MAY REQUIRE FIELD CUTTING OR BENDING FOR HIGHER SKEW BRIDGES.

STAINLESS STEEL REINFORCING STEEL-TWO OPEN RAILS (NOTE: THESE REINFORCING BARS TO BE USED ON ALL SKEWS)

BRIDGE LENGTH			138'-10			151'-4			163'-10			176'-4			188'-10			201'-4			213'-10			226'-4			243'-0		
BAR	LOCATION	SHAPE	NO.	LENGTH	WEIGHT	NO.	LENGTH	WEIGHT	NO.	LENGTH	WEIGHT	NO.	LENGTH	WEIGHT	NO.	LENGTH	WEIGHT	NO.	LENGTH	WEIGHT	NO.	LENGTH	WEIGHT	NO.	LENGTH	WEIGHT	NO.	LENGTH	WEIGHT
6c1	VERTICAL, END SECTION & ABUT. DIAPH. EXT.		96	4'-11	709	96	4'-11	709	96	4'-11	709	96	4'-11	709	96	4'-11	709	168	4'-11	1,241	168	4'-11	1241	168	4'-11	1241	168	4'-11	1241
6c3	VERTICAL, END SECTION		16	4'-1	98	16	4'-1	98	16	4'-1	98	16	4'-1	98	16	4'-1	98	16	4'-1	98	16	4'-1	98	16	4'-1	98	16	4'-1	98
6j1	VERTICAL DOWELS, OPEN RAIL		312	4'-0	1,875	328	4'-0	1,971	360	4'-0	2,163	392	4'-0	2,355	408	4'-0	2,451	440	4'-0	2,644	456	4'-0	2,740	488	4'-0	2,932	520	4'-0	3,124
	STAINLESS STEEL REINFORCING STEEL TOTAL LBS.				2,682			2,778			2,970			3,162			3,258			3,983			4,079			4,271			4,463

NOTE: REINFORCING STEEL QUANTITIES ARE TO BE INCLUDED ON THE SUMMARY QUANTITIES SHEET IN THE PLAN.

CONCRETE PLACEMENT SUMMARY - C.Y.

BRIDGE LENGTH		138'-10	151'-4	163'-10	176'-4	188'-10	201'-4	213'-10	226'-4	243'-0
OPEN RAIL SECTION	2 @ 0.077 CU. YDS. PER FT.	22.0	24.0	25.9	27.8	29.7	31.7	33.6	35.5	38.1
OPEN RAIL-END SECTION	4 @ 0.687 CU. YDS.	2.7	2.7	2.7	2.7	2.7	2.7	2.7	2.7	2.7
OPEN RAIL-ABUT. DIAPH. SECTION	4 @ 0.107 CU. YDS. PER FT.	—	—	—	—	—	1.9	1.9	1.9	1.9
OPEN RAIL-END POSTS	4 @ 0.11 CU. YDS.	0.4	0.4	0.4	0.4	0.4	0.4	0.4	0.4	0.4
OPEN RAIL-INTERIOR POSTS	2 × "E" @ 0.07 CU. YDS.	2.4	2.5	2.8	3.1	3.2	3.5	3.6	3.9	4.2
	TOTAL (C.Y.)	27.5	29.6	31.8	34.0	36.0	40.2	42.2	44.4	47.3

CONCRETE QUANTITIES SHOWN ARE BASED ON 45° SKEW. FOR "E" SEE SHEET H40-42-14.

OPEN CONCRETE RAIL, TL-4 QUANTITIES - L.F.

BRIDGE LENGTH	138'-10	151'-4	163'-10	176'-4	188'-10	201'-4	213'-10	226'-4	243'-0
OPEN CONCRETE RAILING, TL-4 0° SKEW	311.7	336.7	361.7	386.7	411.7	456.7	481.7	506.7	540.0
OPEN CONCRETE RAILING, TL-4 15° SKEW	311.9	336.9	361.9	386.9	411.9	456.7	481.7	506.7	540.0
OPEN CONCRETE RAILING, TL-4 30° SKEW	312.6	337.6	362.6	387.6	412.6	456.7	481.7	506.7	540.0
OPEN CONCRETE RAILING, TL-4 45° SKEW	314.2	339.2	364.2	389.2	414.2	456.7	481.7	506.7	540.0

BENT BAR DETAILS

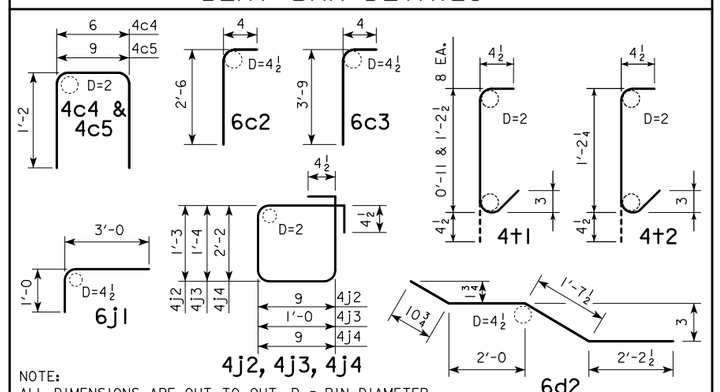

LATEST REVISION DATE

APPROVED BY BRIDGE ENGINEER

IOWA DOT Highway Division

STANDARD DESIGN - 40' ROADWAY, THREE SPAN BRIDGE

PRETENSIONED PRESTRESSED CONCRETE BEAM BRIDGES

SEPTEMBER, 2014

OPEN RAIL, TL-4 DETAILS

SHEET 2A OF 2

H40-43A-14

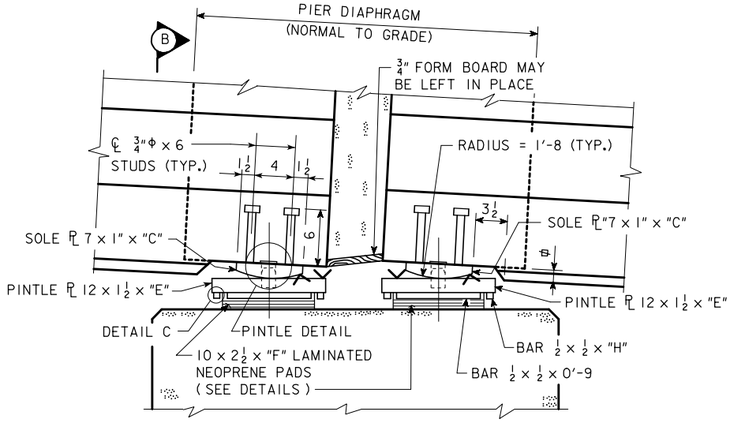

PART ELEVATION

B

Φ NOTCH BEAM END TO SOLE PL THICKNESS MAXIMUM 1"

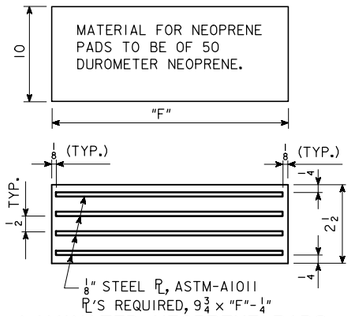

LAMINATED NEOPRENE PADS

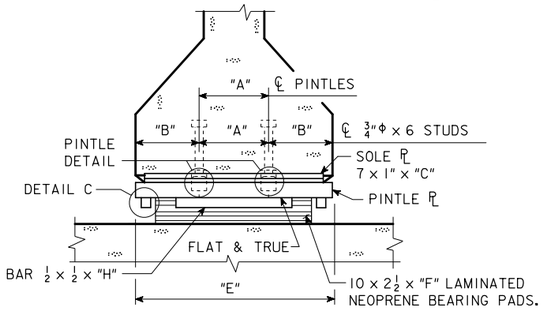

SECTION B-B FOR A & B BEAMS

(DIAPHRAGM CONCRETE NOT SHOWN)

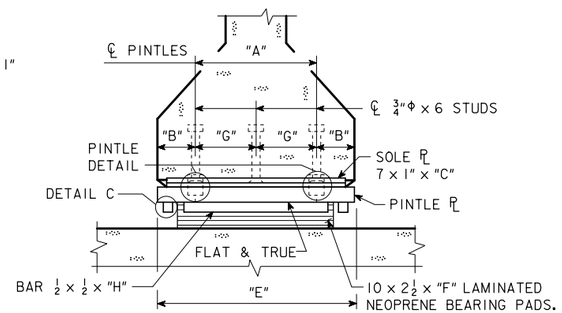

SECTION B-B FOR C BEAMS

(DIAPHRAGM CONCRETE NOT SHOWN)

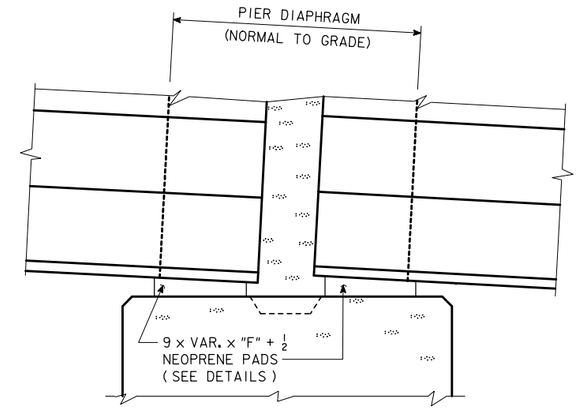

PART ELEVATION

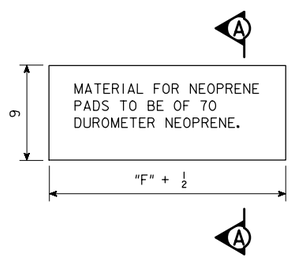

PLAN OF NEOPRENE PAD

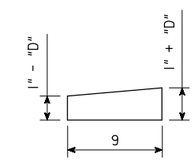

SECTION A-A

SLOPE	"D"
SLOPE ≤ 1.4%	0"
1.4% < SLOPE ≤ 4.2%	1/8"
4.2% < SLOPE ≤ 5.0%	1/4"

$$\text{SLOPE}_{\text{SPAN 1}} = 100\% \left| \frac{\text{P/G ELEV. @ NEAR ABUT. - P/G ELEV. @ PIER 1}}{\text{SPAN 1 LENGTH}} \right|$$

$$\text{SLOPE}_{\text{SPAN 2}} = 100\% \left| \frac{\text{P/G ELEV. @ PIER 1 - P/G ELEV. @ PIER 2}}{\text{SPAN 2 LENGTH}} \right|$$

$$\text{SLOPE}_{\text{SPAN 3}} = 100\% \left| \frac{\text{P/G ELEV. @ PIER 2 - P/G ELEV. @ FAR ABUT.}}{\text{SPAN 3 LENGTH}} \right|$$

SLOPE CALCULATION FORMULA

FIXED PIER

FIXED PIER BEARING NOTES:

IF CALCULATED SLOPE FOR A GIVEN SPAN EXCEEDS 1.4%, THE NEOPRENE BEARING PADS AT THE FIXED PIER FOR THAT SPAN SHALL BE TAPERED. REFER TO TABLE FOR DIMENSIONS OF TAPERED PADS.

COST OF NEOPRENE PADS SHALL BE INCLUDED IN THE PRICE BID FOR "PRETENSIONED PRESTRESSED CONCRETE BEAMS".

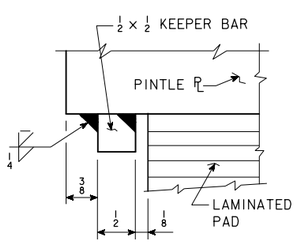

DETAIL C

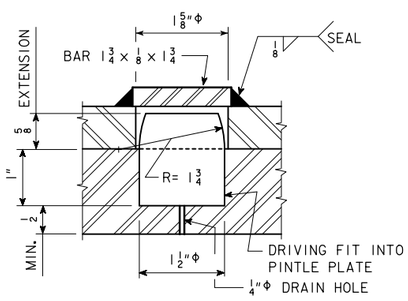

PINTLE DETAIL

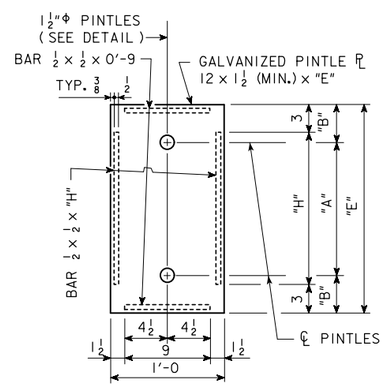

PLAN OF PINTLE PLATE

EXPANSION PIER BEARING NOTES:

SURFACES MARKED "V" SHALL BE FINISHED ANSI 250.

PINTLE PLATES ARE A PART OF THE SUPERSTRUCTURE "STRUCTURAL STEEL QUANTITY".

COSTS OF ANCHORED CURVED SOLE PLATES AND NEOPRENE PADS ARE TO BE INCLUDED IN THE PRICE BID FOR "PRETENSIONED PRESTRESSED CONCRETE BEAMS".

THE SOLE PLATES AND PINTLE PLATES SHALL BE GALVANIZED. ALL WELDING SHALL BE COMPLETED PRIOR TO GALVANIZING. THE SURFACE OF THE PINTLE PLATE IN CONTACT WITH THE LAMINATED NEOPRENE PADS SHALL BE FREE OF PROJECTIONS DUE TO THE GALVANIZING.

SOLE PLATES ARE TO BE SET IN FORMS WHEN BEAMS ARE CAST AND THE BOTTOM OF BEAMS FORMED OUT AS SHOWN TO EXCLUDE CONCRETE.

SOLE PLATES SHALL COMPLY WITH ONE OF THE FOLLOWING :

ASTM A 514 GRADE B

ASTM A 709 GRADE HPS 70W

STRUCTURAL STEEL			
DATA FOR ONE BEARING			
BEAM SIZE	A	B	C
WEIGHT (LBS.)	89	89	106

DOES NOT INCLUDE CURVED SOLE PL

NOTE: STRUCTURAL STEEL WEIGHT IS INCLUDED ON THE SUMMARY QUANTITIES SHEET.

EXPANSION PIER

LAMINATED NEOPRENE PAD / CURVED SOLE PL ASSEMBLY

VARIABLE DIMENSIONS		
	BEAM BOTTOM FLANGE WIDTH	
	A & B BEAMS 1'-5	C BEAMS 1'-8
"A"	0'-6	1'-0
"B"	0'-5 1/2	0'-4
"C"	1'-3 1/2	1'-6 1/2
"E"	1'-5	1'-8
"F"	1'-3	1'-6
"G"	————	0'-6
"H"	0'-11	1'-2

LATEST REVISION DATE

APPROVED BY BRIDGE ENGINEER

IOWA DOT Highway Division

STANDARD DESIGN - 40' ROADWAY, THREE SPAN BRIDGE

PRETENSIONED PRESTRESSED CONCRETE BEAM BRIDGES

SEPTEMBER, 2014

PIER BEARING DETAILS

H40-44-14

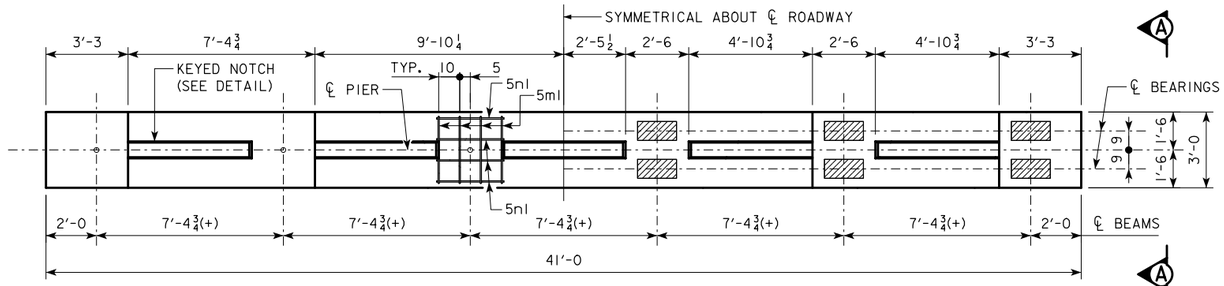

TYPICAL PLAN

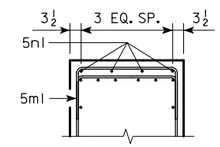

5ml & 5nl
BAR LAYOUT

NOTE:
SEE SHEET H40-09-14
FOR "U" DIMENSION.

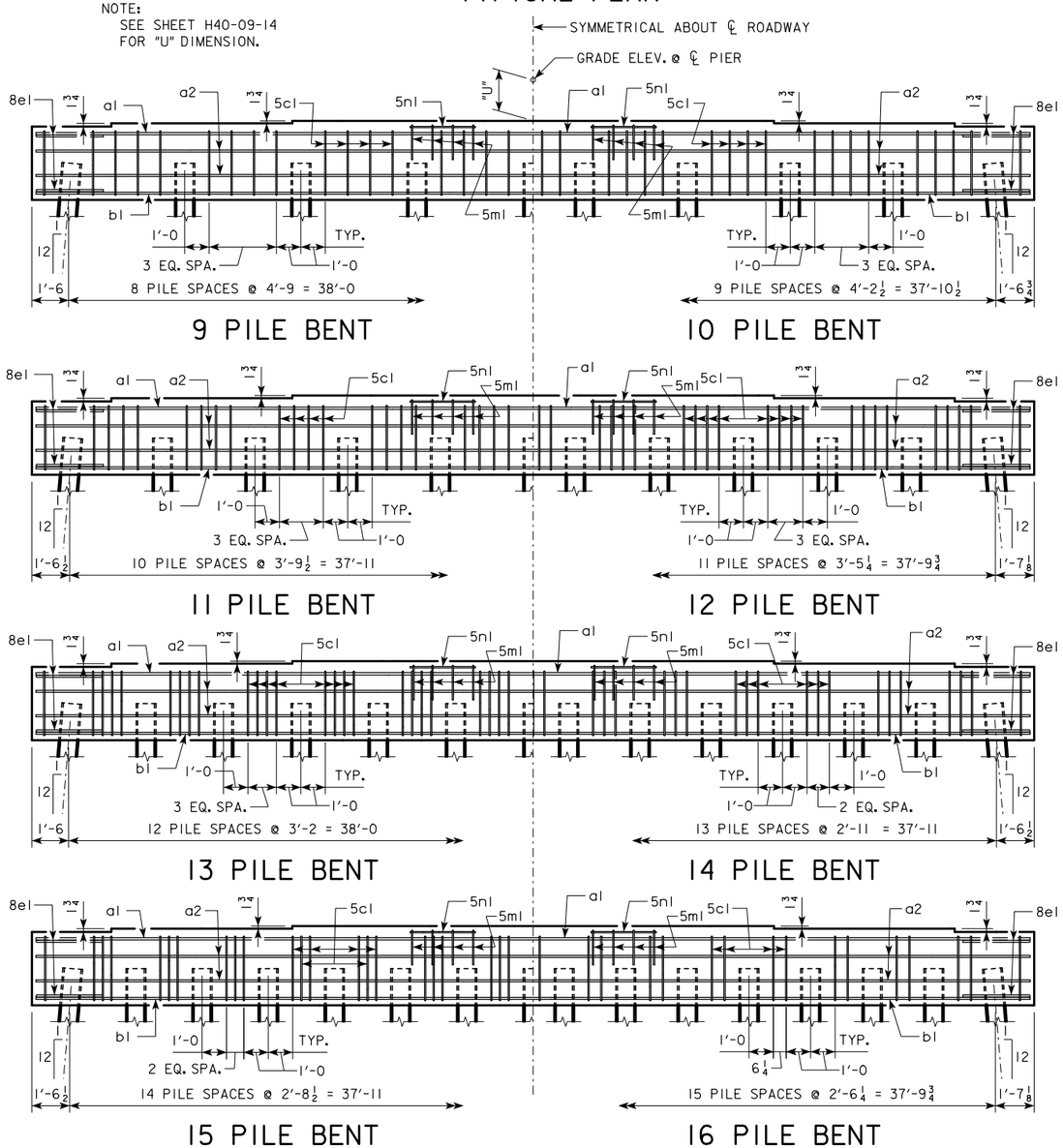

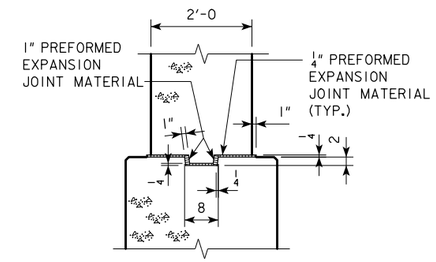

KEYED NOTCH DETAIL

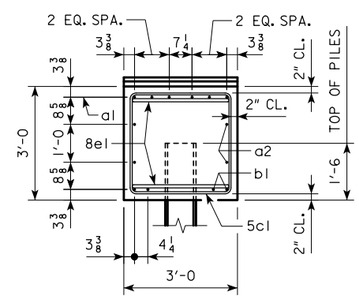

VIEW A-A
FOR 9, 10, 11, 12, 13, 14 & 15 PILE BENTS

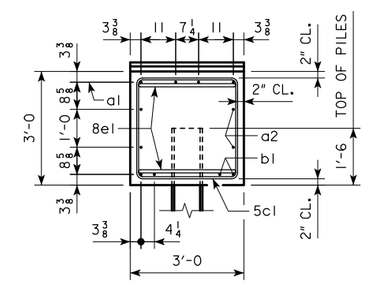

VIEW A-A
FOR 16 PILE BENT

LATEST REVISION DATE

APPROVED BY BRIDGE ENGINEER

IOWA DOT Highway Division

STANDARD DESIGN - 40' ROADWAY, THREE SPAN BRIDGE

PRETENSIONED PRESTRESSED CONCRETE BEAM BRIDGES

SEPTEMBER, 2014

PILE BENT PIERS

0° SKEW

H40-45-14

PILE BENT NOTES:

THESE PIER BENTS ARE DESIGNED FOR USE IN LOCATIONS WHERE ICE AND DRIFT CONDITIONS ARE NOT SEVERE.

FOR DETAILS OF TRESTLE PILES, TYPES 1, 2 AND 3, SEE STANDARD PIOL.

MINIMUM CLEAR DISTANCE FROM FACE OF CONCRETE TO NEAR REINFORCING BAR SHALL BE 2 INCHES UNLESS OTHERWISE NOTED OR SHOWN.

PIER PILES SHALL BE DRIVEN TO VALUES SHOWN IN DESIGN PLANS.

REINFORCING BAR LIST AND ESTIMATED QUANTITIES - PER PILE BENT

			9 PILE BENT			10 PILE BENT			11 PILE BENT			12 PILE BENT			13 PILE BENT			14 PILE BENT			15 PILE BENT			16 PILE BENT		
BAR	LENGTH	SHAPE	NO.	SIZE	WEIGHT	NO.	SIZE	WEIGHT	NO.	SIZE	WEIGHT	NO.	SIZE	WEIGHT	NO.	SIZE	WEIGHT	NO.	SIZE	WEIGHT	NO.	SIZE	WEIGHT	NO.	SIZE	WEIGHT
a1	40'-8		6	9	830	6	9	830	6	9	830	6	9	830	6	9	830	6	9	830	6	9	830	4	9	553
a2	40'-8		4	8	434	4	8	434	4	8	434	4	8	434	4	8	434	4	8	434	4	8	434	4	8	434
b1	40'-8		4	9	553	4	9	553	4	9	553	4	9	553	4	9	553	4	9	553	4	8	434	4	8	434
5c1	11'-8		34	5	414	38	5	462	42	5	511	46	5	560	50	5	608	41	5	499	44	5	535	32	5	389
8e1	8'-1		4	8	86	4	8	86	4	8	86	4	8	86	4	8	86	4	8	86	4	8	86	4	8	86
5m1	5'-6		8	5	46	8	5	46	8	5	46	8	5	46	8	5	46	8	5	46	8	5	46	8	5	46
5n1	2'-8		8	5	22	8	5	22	8	5	22	8	5	22	8	5	22	8	5	22	8	5	22	8	5	22
REINFORCING STEEL (LB.)			2385			2433			2482			2531			2579			2470			2387			1964		
STRUCTURAL (1) CONCRETE (CY)		PILE TYPE																								
		1, 2	-----			-----			14.1			14.0			14.0			13.9			13.9			13.8		
		3	14.5			14.5			14.5			14.5			14.5			14.5			14.5			-----		

NOTE: THE REINFORCING STEEL QUANTITY IS TO BE INCLUDED ON THE SUMMARY QUANTITIES SHEET IN THE PLAN.

NOTE: THE CONCRETE QUANTITY IS TO BE INCLUDED ON THE SUMMARY QUANTITIES SHEET IN THE PLAN.

NOTE: THE NUMBER OF PILES AND THE PILE TYPE ARE TO BE INCLUDED ON THE SUMMARY QUANTITIES SHEET IN THE PLAN.

BENT BAR DETAILS

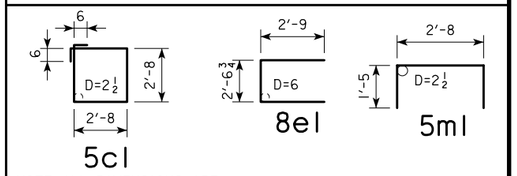

NOTE: ALL DIMENSIONS ARE OUT TO OUT. D=PIN DIAMETER.

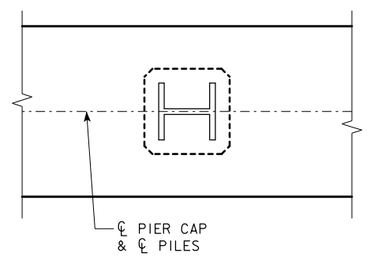

PILE ORIENTATION DETAIL FOR TYPE 3 TRESTLE BENT PILES

℄-℄ ABUTMENT BEARING	FRICTION BEARING PILING			FRICTION OR POINT BEARING PILING		
	PIOL TYPE 1 OR 2			PIOL TYPE 3		
	NUMBER OF TRESTLE PILES	(2) "K" (INCHES)	(3) LRFD PU, STRENGTH I DES. LOAD (KIPS)	NUMBER OF TRESTLE PILES	PILE SIZE	(3) LRFD PU, STRENGTH I DES. LOAD (KIPS)
138'-10	13	14	91	9	HP10x57	131
	11	16	107	9	HP12x53	131
151'-4	14	14	89	9	HP10x57	138
	12	16	104	10	HP12x53	124
163'-10	-----	--	--	10	HP10x57	134
	-----	--	--	10	HP12x53	134
176'-4	-----	--	--	10	HP10x57	141
	-----	--	--	11	HP12x53	128
188'-10	-----	--	--	11	HP10x57	133
	-----	--	--	11	HP12x53	133
201'-4	-----	--	--	12	HP10x57	136
				13	HP12x53	126
213'-10	-----	--	--	12	HP10x57	143
				13	HP12x53	132
226'-4	-----	--	--	13	HP10x57	139
				14	HP12x53	129
243'-0	-----	--	--	14	HP10x57	136
				15	HP12x53	127

(1) CONCRETE QUANTITIES SHOWN HAVE HAD THE VOLUME OF EMBEDDED PILES DEDUCTED FOR TYPES 1 AND 2 BASED ON 0.8 FT^3 PER FOOT OF EMBEDMENT. THE CONCRETE QUANTITIES FOR TYPE 3 PILES DO NOT REQUIRE REDUCTION FOR PILE EMBEDMENT.

(2) SEE STANDARD PIOL FOR "K" DIMENSION.

(3) NOTE: PU, STRENGTH I DESIGN LOAD (KIPS) IS NOT THE VALUE USED IN THE FIELD FOR DRIVING PILES.

NOTE: FRICTION BEARING INCLUDES SIDE FRICTION AND END BEARING IN SOIL. POINT BEARING INCLUDES SIDE FRICTION AND POINT BEARING IN ROCK.

LATEST REVISION DATE

APPROVED BY BRIDGE ENGINEER

IOWADOT Highway Division

STANDARD DESIGN - 40' ROADWAY, THREE SPAN BRIDGE

PRETENSIONED PRESTRESSED CONCRETE BEAM BRIDGES

SEPTEMBER, 2014

PILE BENT PIERS

0° SKEW

H40-46-14

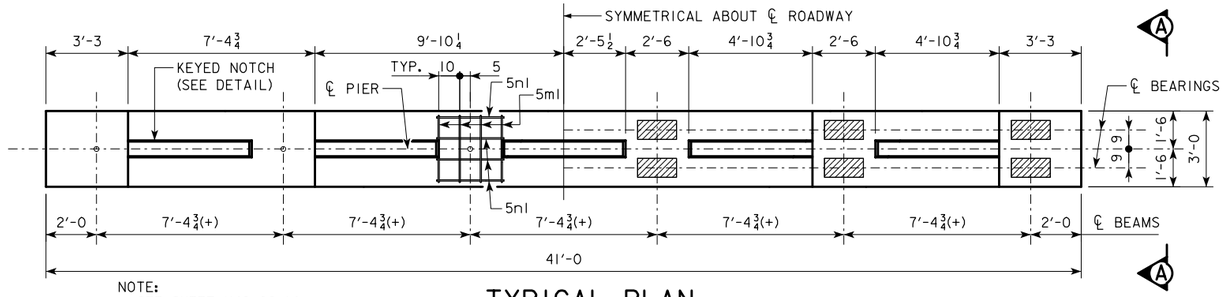

NOTE:
SEE SHEET H40-09-14
FOR "U" DIMENSION.

TYPICAL PLAN

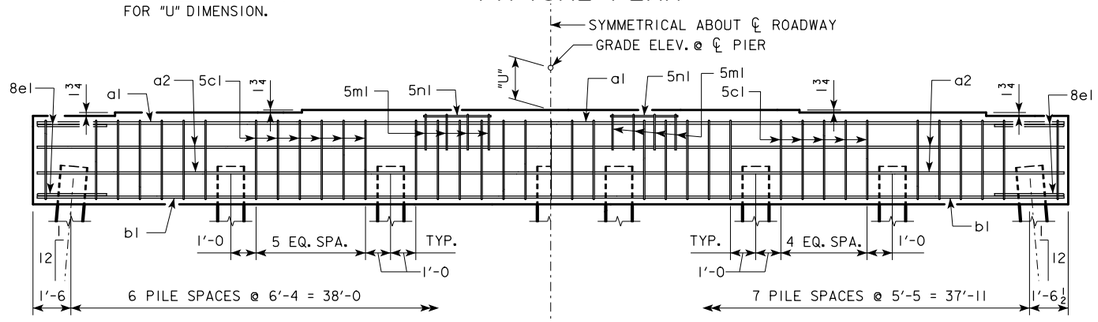

7 PILE BENT

8 PILE BENT

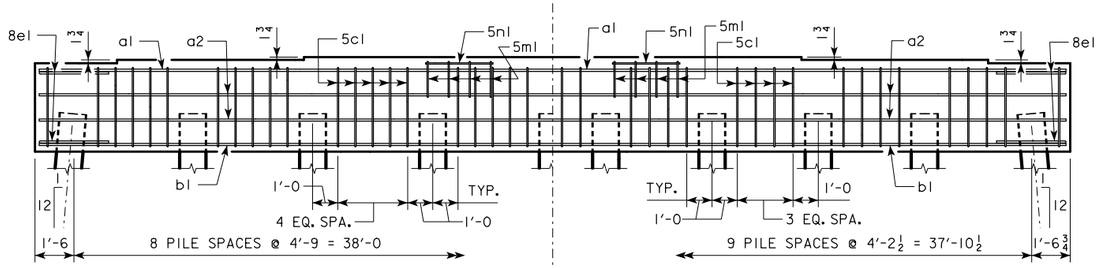

9 PILE BENT

10 PILE BENT

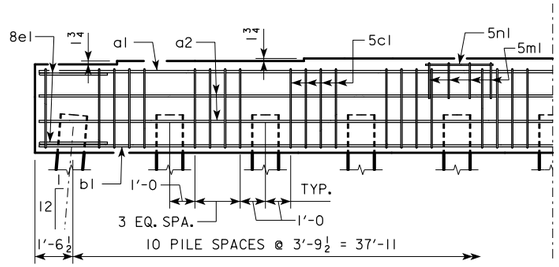

11 PILE BENT

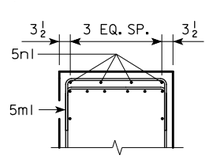

5ml & 5nl BAR LAYOUT

PILE BENT NOTES:

THESE PIER BENTS ARE DESIGNED FOR USE IN LOCATIONS WHERE ICE AND DRIFT CONDITIONS ARE NOT SEVERE.

FOR DETAILS OF TRESTLE PILES, SEE STANDARD PIOL.

MINIMUM CLEAR DISTANCE FROM FACE OF CONCRETE TO NEAR REINFORCING BAR SHALL BE 2 INCHES UNLESS OTHERWISE NOTED OR SHOWN.

PIER PILES SHALL BE DRIVEN TO VALUES SHOWN IN DESIGN PLANS.

NOTE: THE REINFORCING STEEL QUANTITY IS TO BE INCLUDED ON THE SUMMARY QUANTITIES SHEET IN THE PLAN.

NOTE: THE CONCRETE QUANTITY IS TO BE INCLUDED ON THE SUMMARY QUANTITIES SHEET IN THE PLAN.

NOTE: THE NUMBER OF PILES AND THE PILE TYPE ARE TO BE INCLUDED ON THE SUMMARY QUANTITIES SHEET IN THE PLAN.

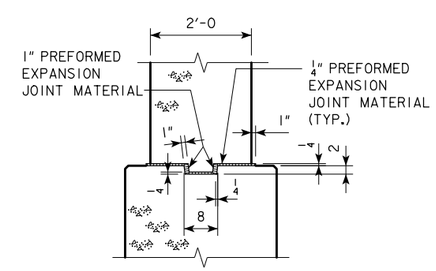

KEYED NOTCH DETAIL

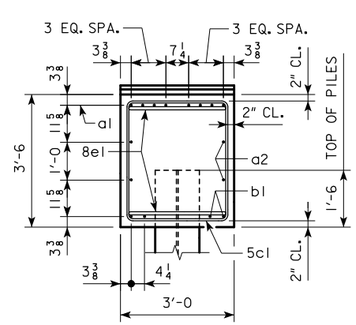

VIEW A-A
FOR 7, 8 & 9 PILE BENTS

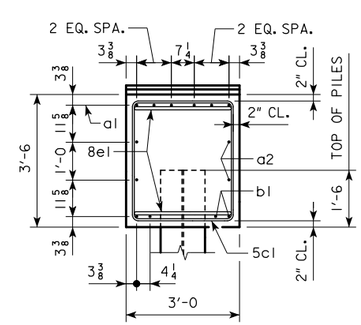

VIEW A-A
FOR 10 & 11 PILE BENTS

REINFORCING BAR LIST AND ESTIMATED QUANTITIES - PER PILE BENT

			7 PILE BENT			8 PILE BENT			9 PILE BENT			10 PILE BENT			11 PILE BENT		
BAR	LENGTH	SHAPE	NO.	SIZE	WEIGHT	NO.	SIZE	WEIGHT	NO.	SIZE	WEIGHT	NO.	SIZE	WEIGHT	NO.	SIZE	WEIGHT
a1	40'-8		8	9	1106	8	9	1106	8	9	1106	6	9	830	6	9	830
a2	40'-8		4	8	434	4	8	434	4	8	434	4	8	434	4	8	434
b1	40'-8		4	9	553	4	9	553	4	9	553	4	9	553	4	9	553
5cl	12'-8		38	5	502	37	5	489	42	5	555	38	5	502	42	5	555
8el	8'-1		4	8	86	4	8	86	4	8	86	4	8	86	4	8	86
5ml	5'-6		8	5	46	8	5	46	8	5	46	8	5	46	8	5	46
5nl	2'-8		8	5	22	8	5	22	8	5	22	8	5	22	8	5	22
REINFORCING STEEL (LB.)			2749			2736			2802			2473			2526		
STRUCTURAL CONCRETE (CY)		PILE TYPE 3	16.8			16.8			16.8			16.8			16.8		

BENT BAR DETAILS

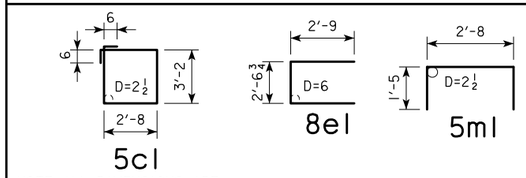

NOTE: ALL DIMENSIONS ARE OUT TO OUT. D=PIN DIAMETER.

FRICTION OR POINT BEARING PILING

℄-℄ ABUTMENT BEARING	PIOL TYPE 3		
	NUMBER OF TRESTLE PILES	PILE SIZE	(1) LRFD PU, STRENGTH I DES. LOAD (KIPS)
138'-10	7	HP14x73	170
	7	HP14x89	170
151'-4	7	HP14x73	179
	7	HP14x89	179
163'-10	8	HP14x73	169
	7	HP14x89	194
176'-4	8	HP14x73	177
	7	HP14x89	202
188'-10	8	HP14x73	185
	7	HP14x89	211
201'-4	9	HP14x73	183
	8	HP14x89	206
213'-10	10	HP14x73	173
	8	HP14x89	216
226'-4	10	HP14x73	182
	9	HP14x89	202
243'-0	11	HP14x73	174
	9	HP14x89	213

(1) NOTE: PU, STRENGTH I DESIGN LOAD (KIPS) IS NOT THE VALUE USED IN THE FIELD FOR DRIVING PILES.

NOTE: FRICTION BEARING INCLUDES SIDE FRICTION AND END BEARING IN SOIL. POINT BEARING INCLUDES SIDE FRICTION AND POINT BEARING IN ROCK.

LATEST REVISION DATE

APPROVED BY BRIDGE ENGINEER

IOWA DOT Highway Division

STANDARD DESIGN - 40' ROADWAY, THREE SPAN BRIDGE

PRETENSIONED PRESTRESSED CONCRETE BEAM BRIDGES

SEPTEMBER, 2014

PILE BENT PIERS HP14 PILES

0° SKEW

H40-47-14

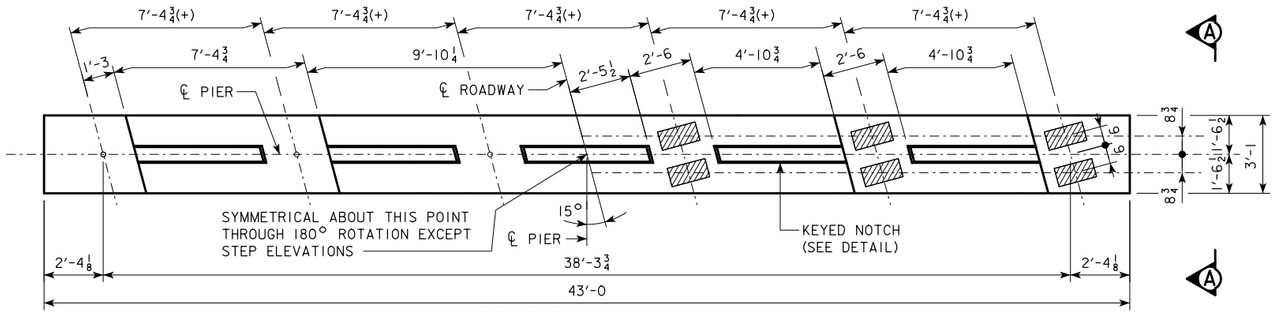

TYPICAL PLAN

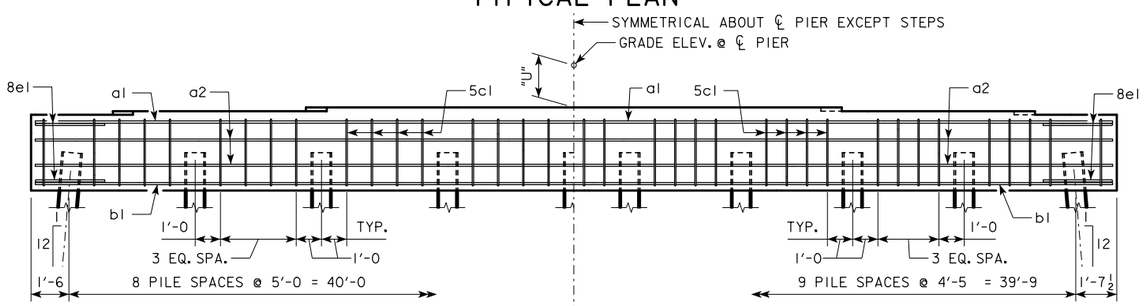

9 PILE BENT

10 PILE BENT

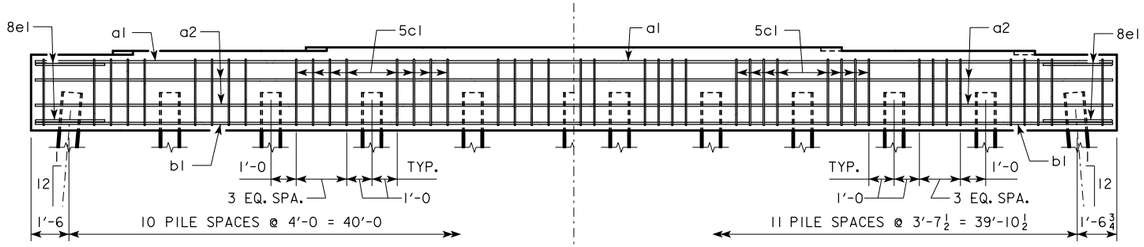

11 PILE BENT

12 PILE BENT

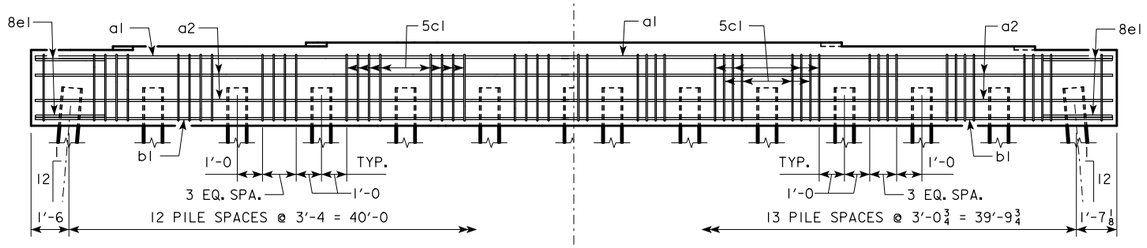

13 PILE BENT

14 PILE BENT

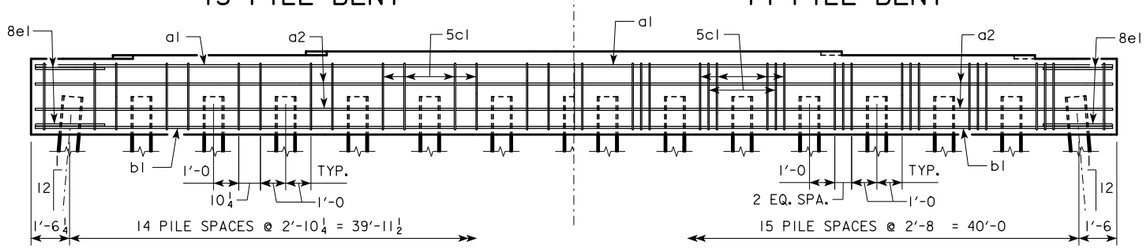

15 PILE BENT

16 PILE BENT

NOTE:
THE HEIGHT OF THE STEPS ON THE BRIDGE SEAT IS EQUAL TO THE DIFFERENCE IN ELEVATIONS OF THE TOP OF SLAB AT ADJACENT BEAMS ALONG ℄ PIER.
SEE SHEET H40-15-14 FOR "U" DIMENSION.

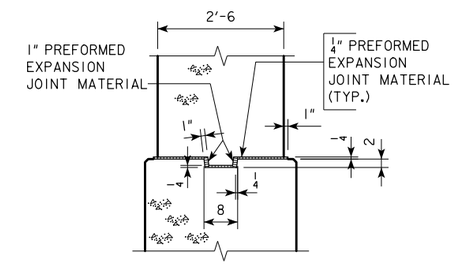

KEYED NOTCH DETAIL

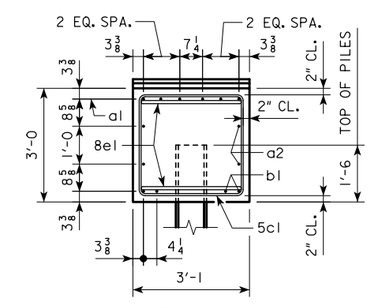

VIEW A-A
FOR 9, 10, 11, 12, 13 & 14 PILE BENTS

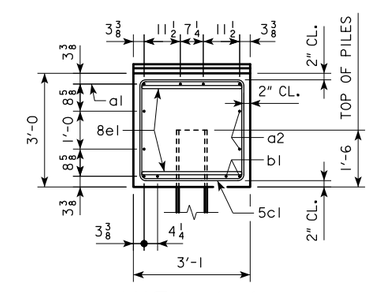

VIEW A-A
FOR 15 & 16 PILE BENTS

LATEST REVISION DATE

APPROVED BY BRIDGE ENGINEER

IOWA DOT Highway Division

STANDARD DESIGN - 40' ROADWAY, THREE SPAN BRIDGE

PRETENSIONED PRESTRESSED CONCRETE BEAM BRIDGES

SEPTEMBER, 2014

PILE BENT PIERS

15° SKEW

H40-48-14

PILE BENT NOTES:

THESE PIER BENTS ARE DESIGNED FOR USE IN LOCATIONS WHERE ICE AND DRIFT CONDITIONS ARE NOT SEVERE.

FOR DETAILS OF TRESTLE PILES, TYPES 1, 2 AND 3, SEE STANDARD PIOL.

MINIMUM CLEAR DISTANCE FROM FACE OF CONCRETE TO NEAR REINFORCING BAR SHALL BE 2 INCHES UNLESS OTHERWISE NOTED OR SHOWN.

PIER PILES SHALL BE DRIVEN TO VALUES SHOWN IN DESIGN PLANS.

REINFORCING BAR LIST AND ESTIMATED QUANTITIES - PER PILE BENT

			9 PILE BENT			10 PILE BENT			11 PILE BENT			12 PILE BENT			13 PILE BENT			14 PILE BENT			15 PILE BENT			16 PILE BENT		
BAR	LENGTH	SHAPE	NO.	SIZE	WEIGHT	NO.	SIZE	WEIGHT	NO.	SIZE	WEIGHT	NO.	SIZE	WEIGHT	NO.	SIZE	WEIGHT	NO.	SIZE	WEIGHT	NO.	SIZE	WEIGHT	NO.	SIZE	WEIGHT
a1	42'-8	———	6	9	870	6	9	870	6	9	870	6	9	870	6	9	870	6	9	870	4	9	580	4	9	580
a2	42'-8	———	4	8	456	4	8	456	4	8	456	4	8	456	4	8	456	4	8	456	4	8	456	4	8	456
b1	42'-8	———	4	9	580	4	9	580	4	9	580	4	9	580	4	9	580	4	9	580	4	8	456	4	8	456
5c1	11'-10		34	5	420	38	5	469	42	5	518	46	5	568	50	5	617	54	5	666	30	5	370	47	5	580
8e1	8'-2		4	8	87	4	8	87	4	8	87	4	8	87	4	8	87	4	8	87	4	8	87	4	8	87
(1) REINFORCING STEEL (LB.)			2413			2462			2511			2561			2610			2659			1949			2159		
STRUCTURAL (2) CONCRETE (CY)	PILE TYPE																									
	1, 2		-----			-----			15.2			15.2			15.2			15.1			15.1			15.0		
	3		15.7			15.7			15.7			15.7			15.7			15.7			15.7			-----		

NOTE: THE REINFORCING STEEL QUANTITY IS TO BE INCLUDED ON THE SUMMARY QUANTITIES SHEET IN THE PLAN.

NOTE: THE CONCRETE QUANTITY IS TO BE INCLUDED ON THE SUMMARY QUANTITIES SHEET IN THE PLAN.

NOTE: THE NUMBER OF PILES AND THE PILE TYPE ARE TO BE INCLUDED ON THE SUMMARY QUANTITIES SHEET IN THE PLAN.

BENT BAR DETAILS

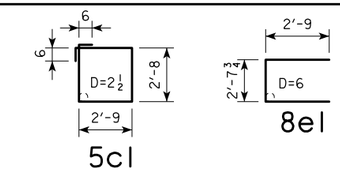

NOTE: ALL DIMENSIONS ARE OUT TO OUT. D=PIN DIAMETER.

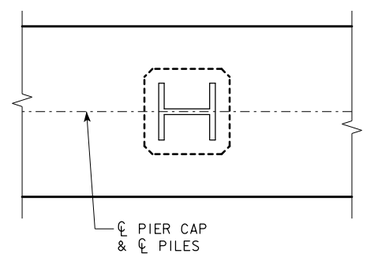

PILE ORIENTATION DETAIL FOR TYPE 3 TRESTLE BENT PILES

℄-℄ ABUTMENT BEARING	FRICTION BEARING PILING			FRICTION OR POINT BEARING PILING		
	PIOL TYPE 1 OR 2			PIOL TYPE 3		
	NUMBER OF TRESTLE PILES	(3) "K" (INCHES)	(4) LRFD PU, STRENGTH I DES. LOAD (KIPS)	NUMBER OF TRESTLE PILES	PILE SIZE	(4) LRFD PU, STRENGTH I DES. LOAD (KIPS)
138'-10	13	14	92	9	HP10x57	133
	11	16	109	9	HP12x53	133
151'-4	14	14	90	9	HP10x57	140
	12	16	105	10	HP12x53	126
163'-10	-----	--	--	10	HP10x57	136
	13	16	105	11	HP12x53	124
176'-4	-----	--	--	10	HP10x57	143
	-----	--	--	11	HP12x53	130
188'-10	-----	--	--	11	HP10x57	135
	-----	--	--	12	HP12x53	124
201'-4	-----	--	--	12	HP10x57	138
				13	HP12x53	127
213'-10	-----	--	--	12	HP10x57	145
				13	HP12x53	134
226'-4	-----	--	--	13	HP10x57	141
				14	HP12x53	131
243'-0	-----	--	--	14	HP10x57	137
				15	HP12x53	128

(1) SEE SHEET H40-17-14 FOR STEP REINFORCING STEEL QUANTITIES AND DETAILS.

(2) CONCRETE QUANTITIES SHOWN HAVE HAD THE VOLUME OF EMBEDDED PILES DEDUCTED FOR TYPES 1 AND 2 BASED ON 0.8 FT^3 PER FOOT OF EMBEDMENT. THE CONCRETE QUANTITIES FOR TYPE 3 PILES DO NOT REQUIRE REDUCTION FOR PILE EMBEDMENT.

(3) SEE STANDARD PIOL FOR "K" DIMENSION.

(4) NOTE: PU, STRENGTH I DESIGN LOAD (KIPS) IS NOT THE VALUE USED IN THE FIELD FOR DRIVING PILES.

NOTE: FRICTION BEARING INCLUDES SIDE FRICTION AND END BEARING IN SOIL. POINT BEARING INCLUDES SIDE FRICTION AND POINT BEARING IN ROCK.

LATEST REVISION DATE

APPROVED BY BRIDGE ENGINEER

IOWA DOT Highway Division

STANDARD DESIGN - 40' ROADWAY, THREE SPAN BRIDGE

PRETENSIONED PRESTRESSED CONCRETE BEAM BRIDGES

SEPTEMBER, 2014

PILE BENT PIERS

15° SKEW

H40-49-14

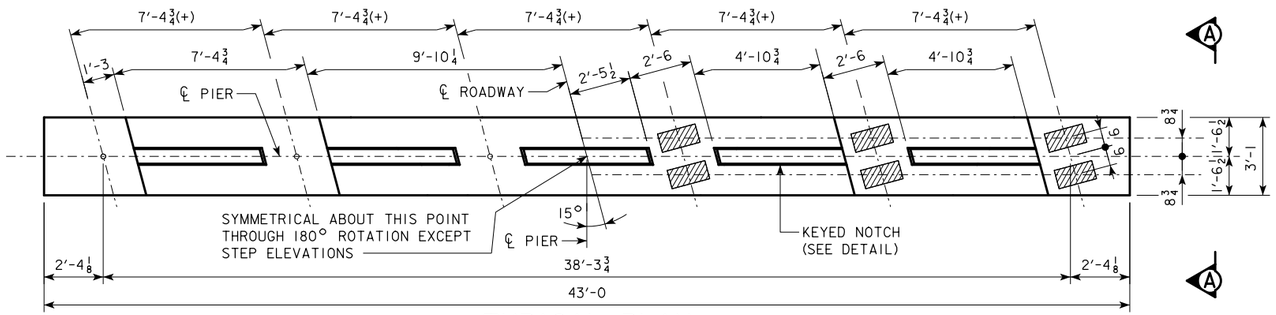

TYPICAL PLAN

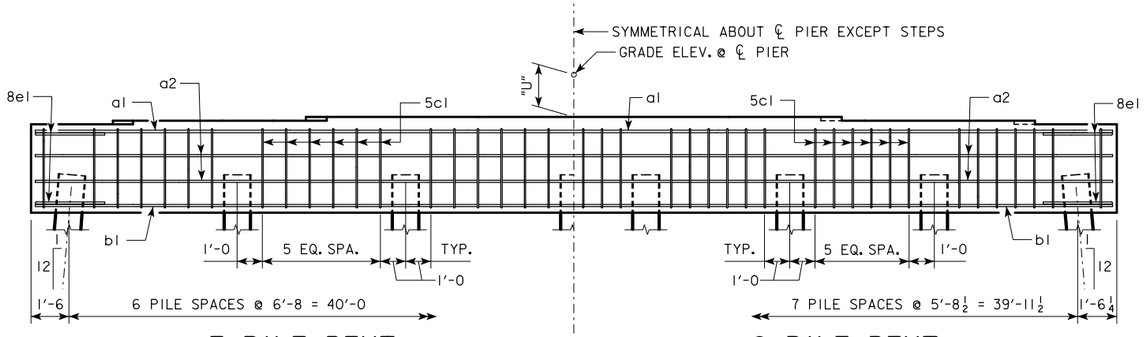

7 PILE BENT

8 PILE BENT

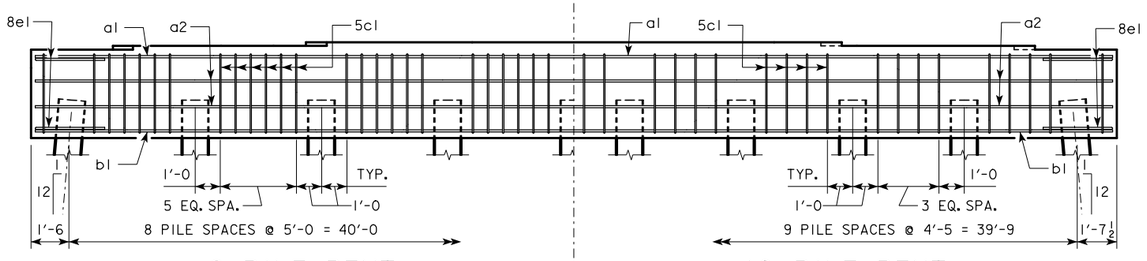

9 PILE BENT

10 PILE BENT

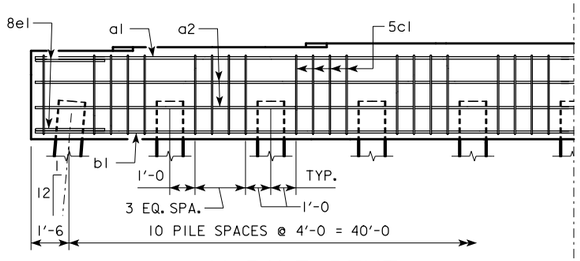

11 PILE BENT

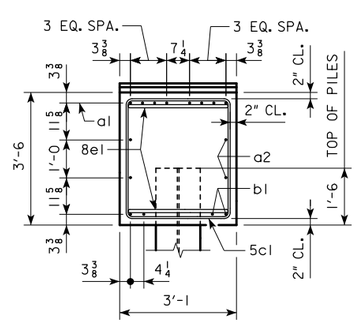

VIEW A-A

FOR 7, 8 & 9 PILE BENTS

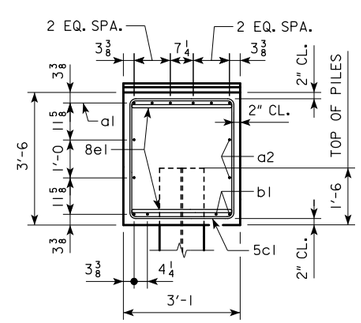

VIEW A-A

FOR 10 & 11 PILE BENTS

NOTE:
THE HEIGHT OF THE STEPS ON THE BRIDGE SEAT IS EQUAL TO THE DIFFERENCE IN ELEVATIONS OF THE TOP OF SLAB AT ADJACENT BEAMS ALONG ℄ PIER.
SEE SHEET H40-15-14 FOR "U" DIMENSION.

PILE BENT NOTES:

THESE PIER BENTS ARE DESIGNED FOR USE IN LOCATIONS WHERE ICE AND DRIFT CONDITIONS ARE NOT SEVERE.

FOR DETAILS OF TRESTLE PILES, SEE STANDARD PIOL.

MINIMUM CLEAR DISTANCE FROM FACE OF CONCRETE TO NEAR REINFORCING BAR SHALL BE 2 INCHES UNLESS OTHERWISE NOTED OR SHOWN.

PIER PILES SHALL BE DRIVEN TO VALUES SHOWN IN DESIGN PLANS.

NOTE: THE REINFORCING STEEL QUANTITY IS TO BE INCLUDED ON THE SUMMARY QUANTITIES SHEET IN THE PLAN.

NOTE: THE CONCRETE QUANTITY IS TO BE INCLUDED ON THE SUMMARY QUANTITIES SHEET IN THE PLAN.

NOTE: THE NUMBER OF PILES AND THE PILE TYPE ARE TO BE INCLUDED ON THE SUMMARY QUANTITIES SHEET IN THE PLAN.

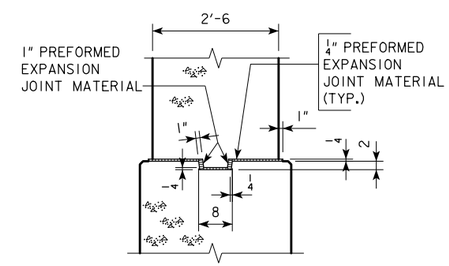

KEYED NOTCH DETAIL

REINFORCING BAR LIST AND ESTIMATED QUANTITIES - PER PILE BENT

			7 PILE BENT			8 PILE BENT			9 PILE BENT			10 PILE BENT			11 PILE BENT		
BAR	LENGTH	SHAPE	NO.	SIZE	WEIGHT	NO.	SIZE	WEIGHT	NO.	SIZE	WEIGHT	NO.	SIZE	WEIGHT	NO.	SIZE	WEIGHT
a1	42'-8		8	9	1161	8	9	1161	8	9	1161	6	9	870	6	9	870
a2	42'-8		4	8	456	4	8	456	4	8	456	4	8	456	4	8	456
b1	42'-8		4	9	580	4	9	580	4	9	580	4	9	580	4	9	580
5c1	12'-10		38	5	509	44	5	589	50	5	669	38	5	509	42	5	562
8e1	8'-2		4	8	87	4	8	87	4	8	87	4	8	87	4	8	87
(1) REINFORCING STEEL (LB.)			2793			2873			2953			2502			2555		
STRUCTURAL CONCRETE (CY)		PILE TYPE 3	18.2			18.2			18.2			18.2			18.2		

BENT BAR DETAILS

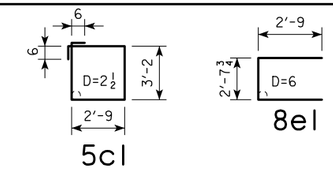

NOTE: ALL DIMENSIONS ARE OUT TO OUT. D=PIN DIAMETER.

FRICTION OR POINT BEARING PILING

℄-℄ ABUTMENT BEARING	PIOL TYPE 3		
	NUMBER OF TRESTLE PILES	PILE	(2) LRFD PU, STRENGTH I DES. LOAD (KIPS)
138'-10	7	HP14x73	173
	7	HP14x89	173
151'-4	7	HP14x73	182
	7	HP14x89	182
163'-10	8	HP14x73	172
	7	HP14x89	196
176'-4	8	HP14x73	180
	7	HP14x89	205
188'-10	9	HP14x73	167
	7	HP14x89	214
201'-4	9	HP14x73	185
	8	HP14x89	208
213'-10	10	HP14x73	175
	8	HP14x89	219
226'-4	10	HP14x73	184
	9	HP14x89	205
243'-0	11	HP14x73	176
	9	HP14x89	215

(1) SEE SHEET H40-17-14 FOR STEP REINFORCING STEEL QUANTITIES AND DETAILS.

(2) FOR DETERMINING ACTUAL PILE LENGTHS IN FIELD.

(3) FOR ESTIMATING PILE LENGTHS USING AASHTO LRFD SPECIFICATIONS.

NOTE: FRICTION BEARING INCLUDES SIDE FRICTION AND END BEARING IN SOIL. POINT BEARING INCLUDES SIDE FRICTION AND POINT BEARING IN ROCK.

LATEST REVISION DATE

APPROVED BY BRIDGE ENGINEER

IOWA DOT Highway Division

STANDARD DESIGN - 40' ROADWAY, THREE SPAN BRIDGE

PRETENSIONED PRESTRESSED CONCRETE BEAM BRIDGES

SEPTEMBER, 2014

PILE BENT PIERS HP14 PILES

15° SKEW

H40-50-14

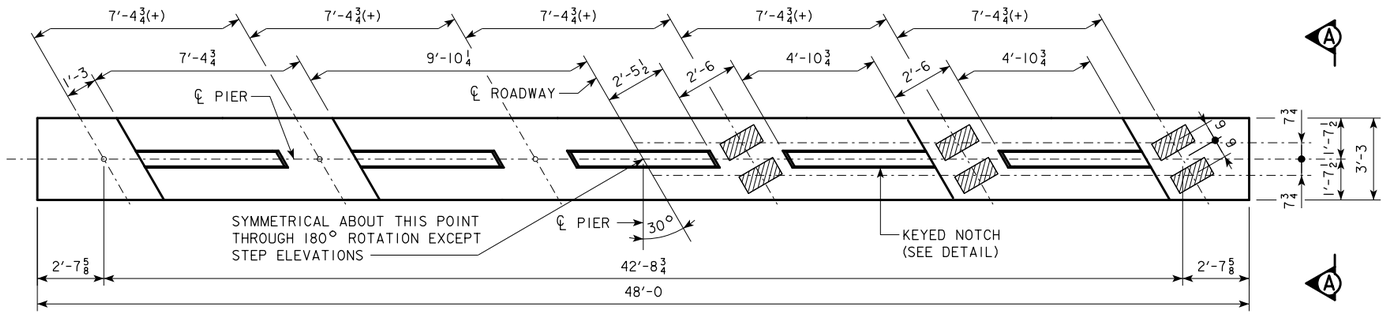

TYPICAL PLAN

NOTE:
THE HEIGHT OF THE STEPS ON THE BRIDGE SEAT IS EQUAL TO THE DIFFERENCE IN ELEVATIONS OF THE TOP OF SLAB AT ADJACENT BEAMS ALONG ℄ PIER.
SEE SHEET H40-22-14 FOR "U" DIMENSION.

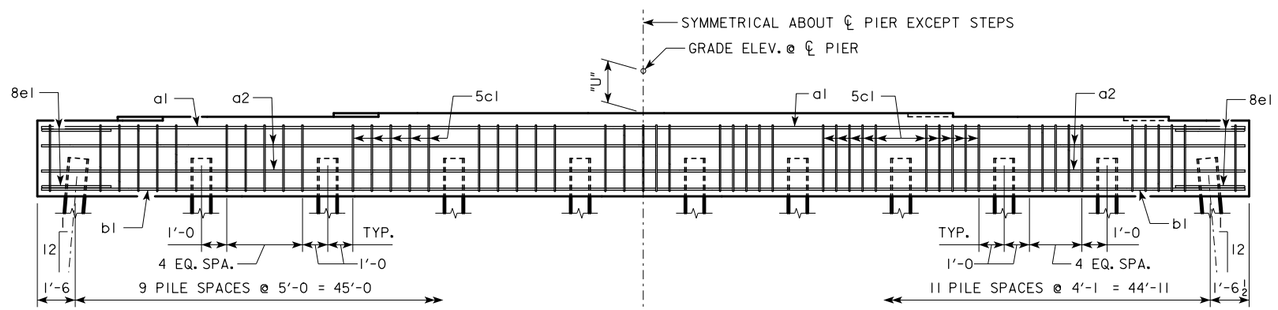

10 PILE BENT

12 PILE BENT

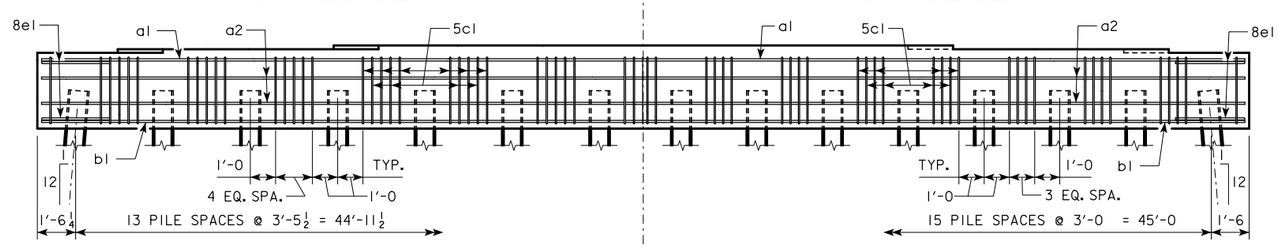

14 PILE BENT

16 PILE BENT

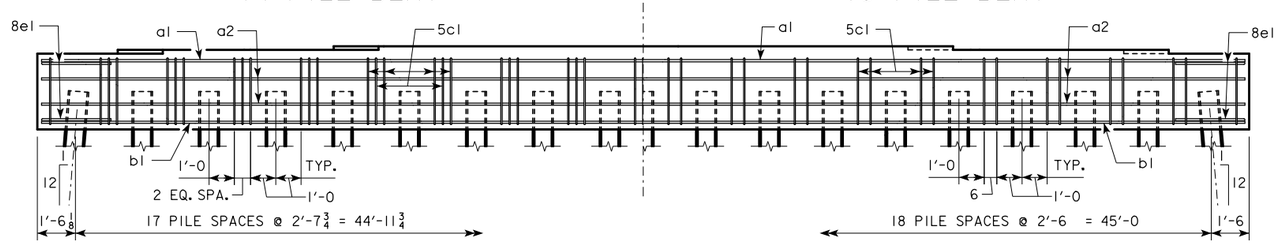

18 PILE BENT

19 PILE BENT

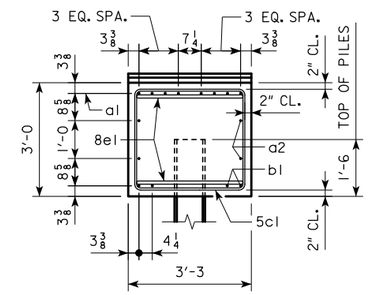

VIEW A-A

FOR 10 PILE BENT

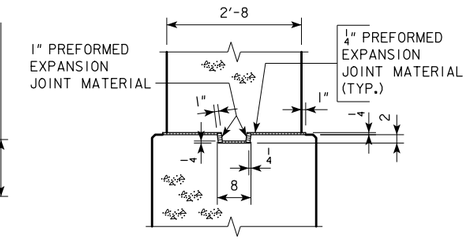

KEYED NOTCH DETAIL

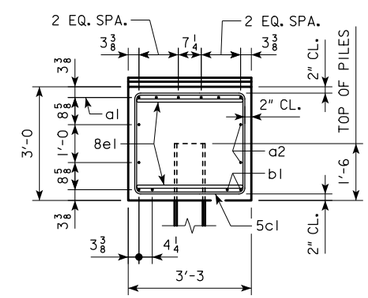

VIEW A-A

FOR 12, 14, 16 & 18 PILE BENTS

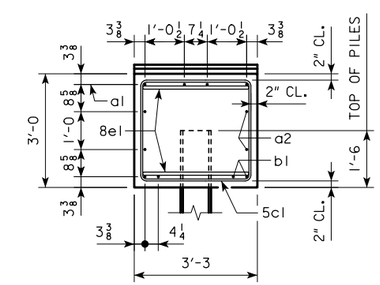

VIEW A-A

FOR 19 PILE BENT

LATEST REVISION DATE

APPROVED BY BRIDGE ENGINEER

IOWA DOT Highway Division

STANDARD DESIGN - 40' ROADWAY, THREE SPAN BRIDGE

PRETENSIONED PRESTRESSED CONCRETE BEAM BRIDGES

SEPTEMBER, 2014

PILE BENT PIERS

30° SKEW

H40-51-14

PILE BENT NOTES:

THESE PIER BENTS ARE DESIGNED FOR USE IN LOCATIONS WHERE ICE AND DRIFT CONDITIONS ARE NOT SEVERE.

FOR DETAILS OF TRESTLE PILES, TYPES 1, 2 AND 3, SEE STANDARD PIOL.

MINIMUM CLEAR DISTANCE FROM FACE OF CONCRETE TO NEAR REINFORCING BAR SHALL BE 2 INCHES UNLESS OTHERWISE NOTED OR SHOWN.

PIER PILES SHALL BE DRIVEN TO VALUES SHOWN IN DESIGN PLANS.

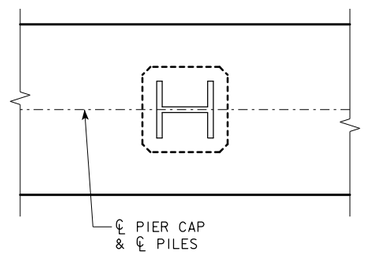

PILE ORIENTATION DETAIL FOR TYPE 3 TRESTLE BENT PILES

REINFORCING BAR LIST AND ESTIMATED QUANTITIES - PER PILE BENT

			10 PILE BENT			12 PILE BENT			14 PILE BENT			16 PILE BENT			18 PILE BENT			19 PILE BENT		
BAR	LENGTH	SHAPE	NO.	SIZE	WEIGHT	NO.	SIZE	WEIGHT	NO.	SIZE	WEIGHT	NO.	SIZE	WEIGHT	NO.	SIZE	WEIGHT	NO.	SIZE	WEIGHT
a1	47'-8	———	8	9	1297	6	9	972	6	9	972	6	9	972	6	9	972	4	9	648
a2	47'-8	———	4	8	509	4	8	509	4	8	509	4	8	509	4	8	509	4	8	509
b1	47'-8	———	4	9	648	4	9	648	4	9	648	4	9	648	4	8	509	4	8	509
5c1	12'-2		47	5	596	57	5	723	67	5	850	62	5	787	53	5	673	38	5	482
8e1	8'-4		4	8	89	4	8	89	4	8	89	4	8	89	4	8	89	4	8	89
(1) REINFORCING STEEL (LB.)			3139			2941			3068			3005			2752			2237		
STRUCTURAL CONCRETE (CY) (2)		PILE TYPE																		
		1, 2	-----			18.1			18.0			17.9			17.8			17.8		
		3	18.6			18.6			18.6			18.6			-----			-----		

NOTE: THE REINFORCING STEEL QUANTITY IS TO BE INCLUDED ON THE SUMMARY QUANTITIES SHEET IN THE PLAN.

NOTE: THE CONCRETE QUANTITY IS TO BE INCLUDED ON THE SUMMARY QUANTITIES SHEET IN THE PLAN.

NOTE: THE NUMBER OF PILES AND THE PILE TYPE ARE TO BE INCLUDED ON THE SUMMARY QUANTITIES SHEET IN THE PLAN.

BENT BAR DETAILS

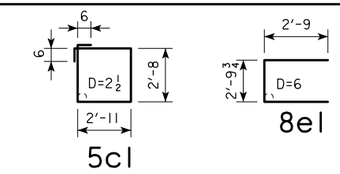

NOTE: ALL DIMENSIONS ARE OUT TO OUT. D=PIN DIAMETER.

℄-℄ ABUTMENT BEARING	FRICTION BEARING PILING			FRICTION OR POINT BEARING PILING		
	PIOL TYPE 1 OR 2			PIOL TYPE 3		
	NUMBER OF TRESTLE PILES	(3) "K" (INCHES)	(4) LRFD PU, STRENGTH I DES. LOAD (KIPS)	NUMBER OF TRESTLE PILES	PILE SIZE	(4) LRFD PU, STRENGTH I DES. LOAD (KIPS)
138'-10	14	14	87	10	HP10x57	122
	12	16	102	10	HP12x53	122
151'-4	14	14	92	10	HP10x57	128
	12	16	107	10	HP12x53	128
163'-10	16	14	87	10	HP10x57	139
	14	16	99	12	HP12x53	116
176'-4	16	14	91	10	HP10x57	145
	14	16	104	12	HP12x53	121
188'-10	16	14	95	12	HP10x57	126
	14	16	108	12	HP12x53	126
201'-4	-----	--	--	12	HP10x57	140
	-----	--	--	14	HP12x53	120
213'-10	-----	--	--	14	HP10x57	126
	-----	--	--	14	HP12x53	126
226'-4	----	--	--	14	HP10x57	133
				14	HP12x53	133
243'-0	-----	--	--	14	HP10x57	139
				16	HP12x53	122

(1) SEE SHEET H40-24-14 FOR STEP REINFORCING STEEL QUANTITIES AND DETAILS.

(2) CONCRETE QUANTITIES SHOWN HAVE HAD THE VOLUME OF EMBEDDED PILES DEDUCTED FOR TYPES 1 AND 2 BASED ON 0.8 FT^3 PER FOOT OF EMBEDMENT. THE CONCRETE QUANTITIES FOR TYPE 3 PILES DO NOT REQUIRE REDUCTION FOR PILE EMBEDMENT.

(3) SEE STANDARD PIOL FOR "K" DIMENSION.

(4) NOTE: PU, STRENGTH I DESIGN LOAD (KIPS) IS NOT THE VALUE USED IN THE FIELD FOR DRIVING PILES.

NOTE: FRICTION BEARING INCLUDES SIDE FRICTION AND END BEARING IN SOIL. POINT BEARING INCLUDES SIDE FRICTION AND POINT BEARING IN ROCK.

LATEST REVISION DATE

APPROVED BY BRIDGE ENGINEER

IOWA DOT Highway Division

STANDARD DESIGN - 40' ROADWAY, THREE SPAN BRIDGE

PRETENSIONED PRESTRESSED CONCRETE BEAM BRIDGES

SEPTEMBER, 2014

PILE BENT PIERS

30° SKEW

H40-52-14

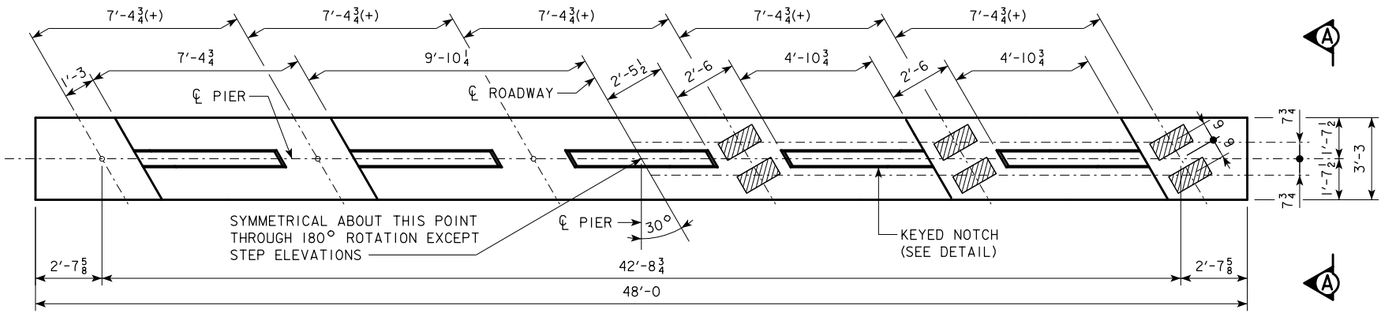

TYPICAL PLAN

NOTE:
THE HEIGHT OF THE STEPS ON THE BRIDGE SEAT IS EQUAL TO THE DIFFERENCE IN ELEVATIONS OF THE TOP OF SLAB AT ADJACENT BEAMS ALONG ℄ PIER.
SEE SHEET H40-22-14 FOR "U" DIMENSION.

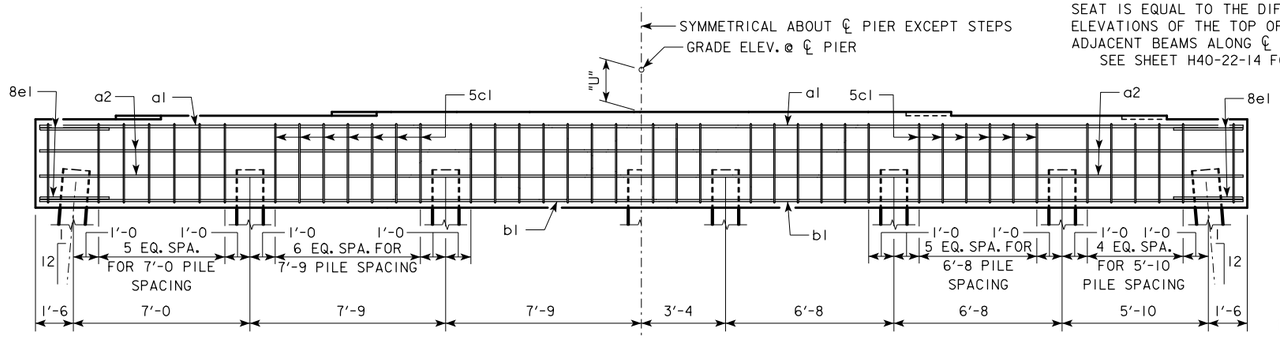

7 PILE BENT

8 PILE BENT

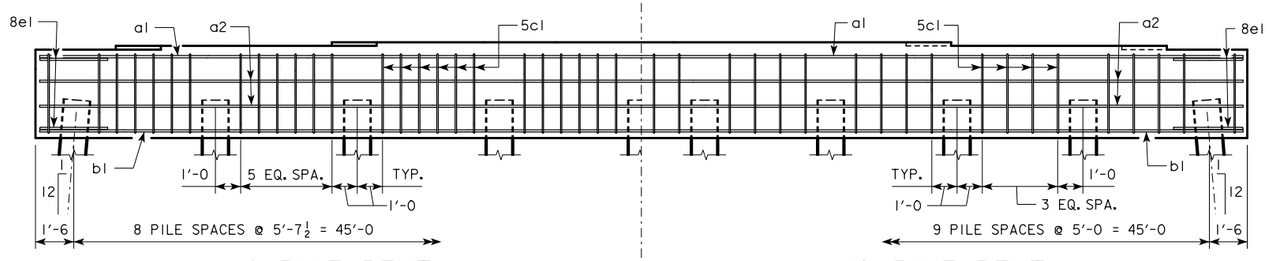

9 PILE BENT

10 PILE BENT

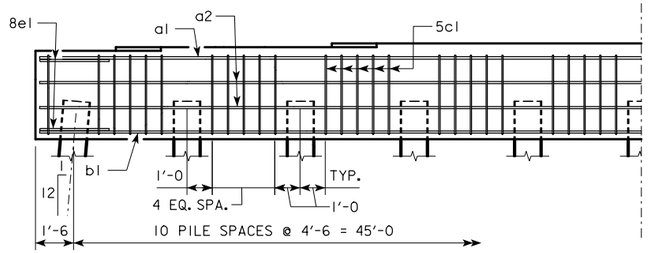

11 PILE BENT

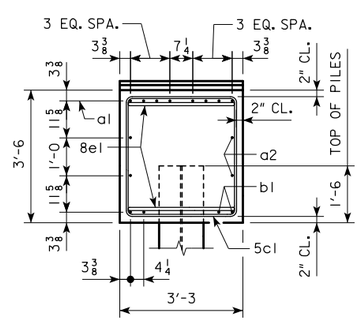

VIEW A-A

FOR 7, 8 & 9 PILE BENTS

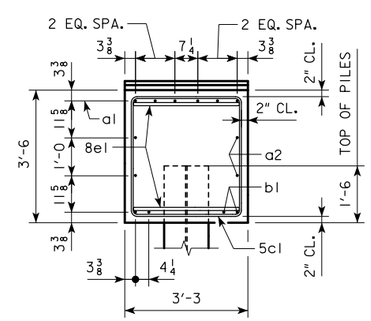

VIEW A-A

FOR 10 & 11 PILE BENTS

PILE BENT NOTES:

THESE PIER BENTS ARE DESIGNED FOR USE IN LOCATIONS WHERE ICE AND DRIFT CONDITIONS ARE NOT SEVERE.

FOR DETAILS OF TRESTLE PILES, SEE STANDARD PIOL.

MINIMUM CLEAR DISTANCE FROM FACE OF CONCRETE TO NEAR REINFORCING BAR SHALL BE 2 INCHES UNLESS OTHERWISE NOTED OR SHOWN.

PIER PILES SHALL BE DRIVEN TO VALUES SHOWN IN DESIGN PLANS.

NOTE: THE REINFORCING STEEL QUANTITY IS TO BE INCLUDED ON THE SUMMARY QUANTITIES SHEET IN THE PLAN.

NOTE: THE CONCRETE QUANTITY IS TO BE INCLUDED ON THE SUMMARY QUANTITIES SHEET IN THE PLAN.

NOTE: THE NUMBER OF PILES AND THE PILE TYPE ARE TO BE INCLUDED ON THE SUMMARY QUANTITIES SHEET IN THE PLAN.

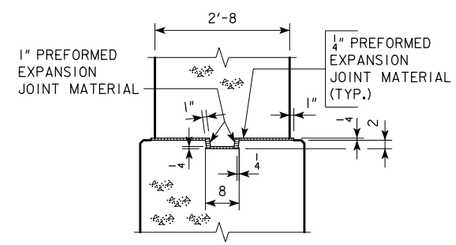

KEYED NOTCH DETAIL

REINFORCING BAR LIST AND ESTIMATED QUANTITIES - PER PILE BENT

			7 PILE BENT			8 PILE BENT			9 PILE BENT			10 PILE BENT			11 PILE BENT		
BAR	LENGTH	SHAPE	NO.	SIZE	WEIGHT	NO.	SIZE	WEIGHT	NO.	SIZE	WEIGHT	NO.	SIZE	WEIGHT	NO.	SIZE	WEIGHT
a1	47'-8	———	8	9	1297	8	9	1297	8	9	1297	6	9	972	6	9	972
a2	47'-8	———	4	8	509	4	8	509	4	8	509	4	8	509	4	8	509
b1	47'-8	———	4	10	820	4	10	820	4	9	648	4	9	648	4	9	648
5c1	13'-2		42	5	577	42	5	577	50	5	687	38	5	522	52	5	714
8e1	8'-4		4	8	89	4	8	89	4	8	89	4	8	89	4	8	89
(1) REINFORCING STEEL (LB.)			3292			3292			3230			2740			2932		
STRUCTURAL CONCRETE (CY)		PILE TYPE 3	21.5			21.5			21.5			21.5			21.5		

BENT BAR DETAILS

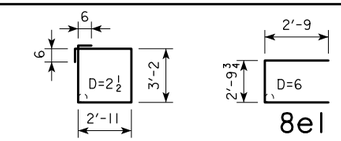

5cl 8el

NOTE: ALL DIMENSIONS ARE OUT TO OUT. D=PIN DIAMETER.

FRICTION OR POINT BEARING PILING

℄-℄ ABUTMENT BEARING	PIOL TYPE 3		
	NUMBER OF TRESTLE PILES	PILE SIZE	(2) LRFD PU, STRENGTH I DES. LOAD (KIPS)
138'-10	7	HP14x73	177
	7	HP14x89	177
151'-4	8	HP14x73	162
	7	HP14x89	186
163'-10	8	HP14x73	175
	7	HP14x89	200
176'-4	8	HP14x73	183
	7	HP14x89	209
188'-10	9	HP14x73	170
	7	HP14x89	218
201'-4	10	HP14x73	170
	8	HP14x89	212
213'-10	10	HP14x73	178
	8	HP14x89	222
226'-4	11	HP14x73	170
	9	HP14x89	208
243'-0	11	HP14x73	179
	9	HP14x89	219

(1) SEE SHEET H40-24-14 FOR STEP REINFORCING STEEL QUANTITIES AND DETAILS.

(2) FOR DETERMINING ACTUAL PILE LENGTHS IN FIELD.

(3) NOTE: PU, STRENGTH I DESIGN LOAD (KIPS) IS NOT THE VALUE USED IN THE FIELD FOR DRIVING PILES.

NOTE: FRICTION BEARING INCLUDES SIDE FRICTION AND END BEARING IN SOIL. POINT BEARING INCLUDES SIDE FRICTION AND POINT BEARING IN ROCK.

LATEST REVISION DATE

APPROVED BY BRIDGE ENGINEER

IOWA DOT Highway Division

STANDARD DESIGN - 40' ROADWAY, THREE SPAN BRIDGE

PRETENSIONED PRESTRESSED CONCRETE BEAM BRIDGES

SEPTEMBER, 2014

PILE BENT PIERS HP14 PILES

30° SKEW

H40-53-14

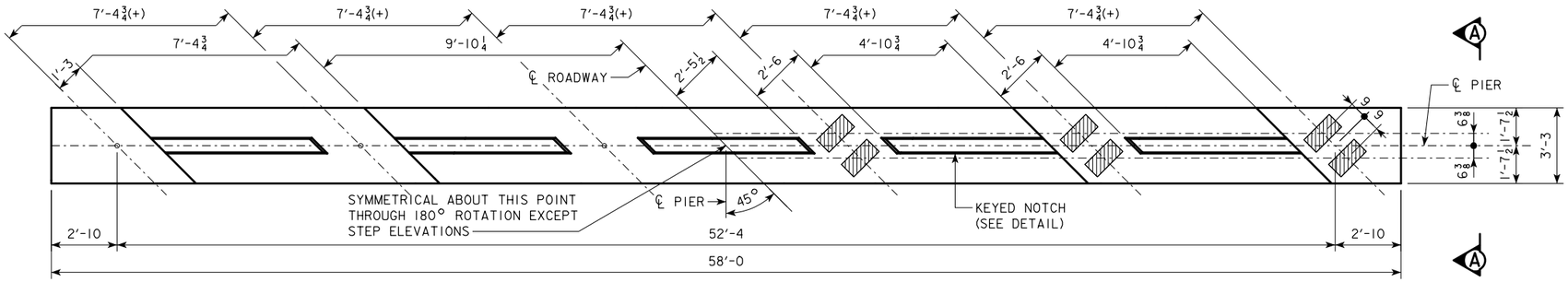

TYPICAL PLAN

NOTE:
THE HEIGHT OF THE STEPS ON THE BRIDGE SEAT IS EQUAL TO THE DIFFERENCE IN ELEVATIONS OF THE TOP OF SLAB AT ADJACENT BEAMS ALONG ℄ PIER.
SEE SHEET H40-29-14 FOR "U" DIMENSION.

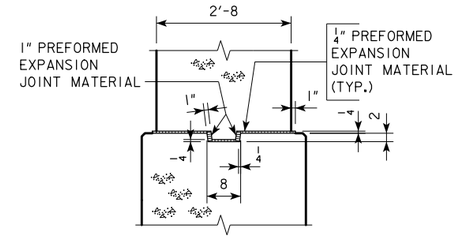

KEYED NOTCH DETAIL

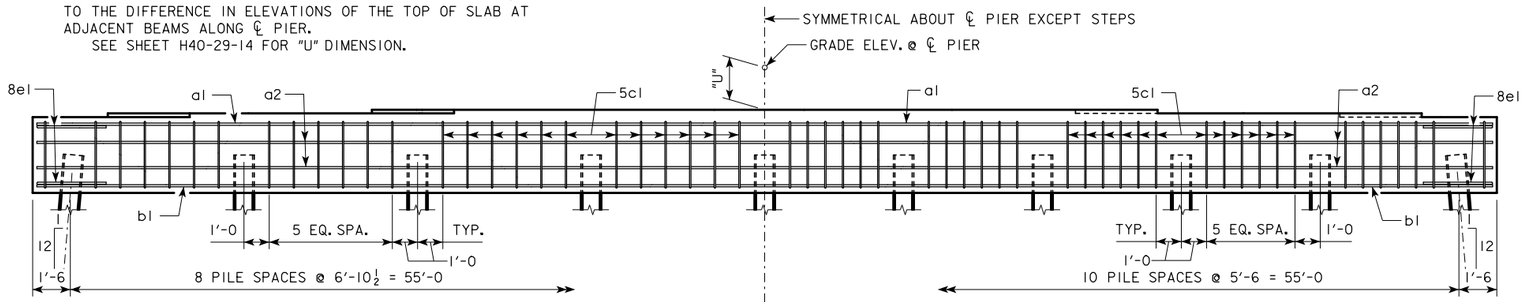

9 PILE BENT

11 PILE BENT

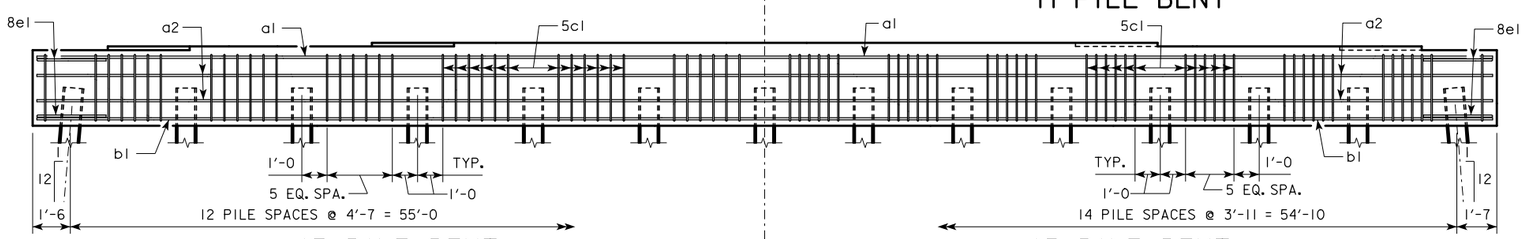

13 PILE BENT

15 PILE BENT

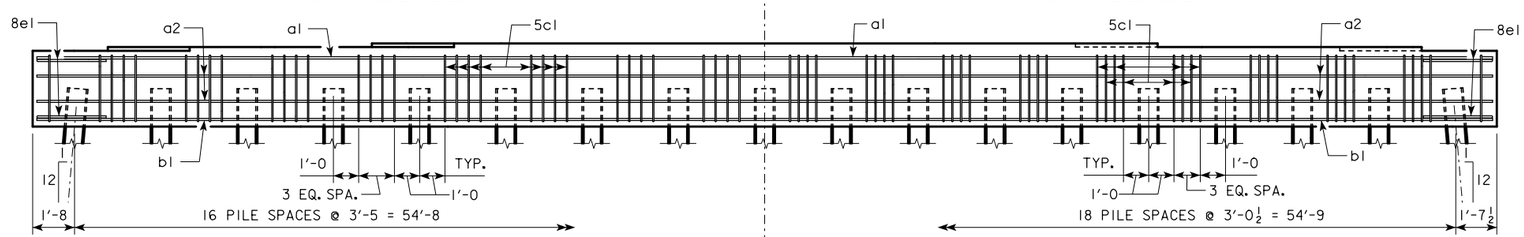

17 PILE BENT

19 PILE BENT

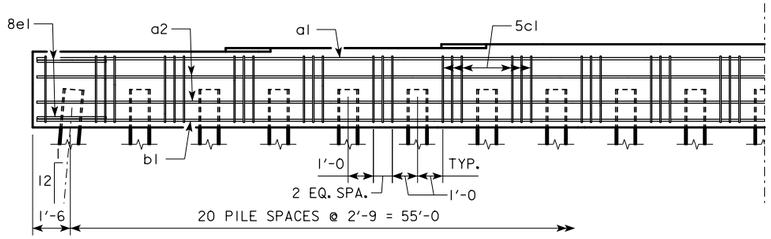

21 PILE BENT

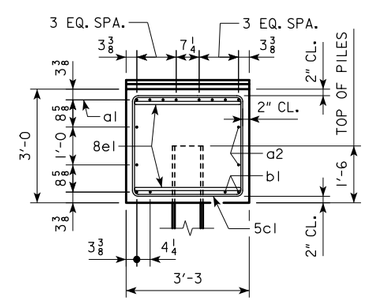

VIEW A-A
FOR 9, 11 & 13 PILE BENTS

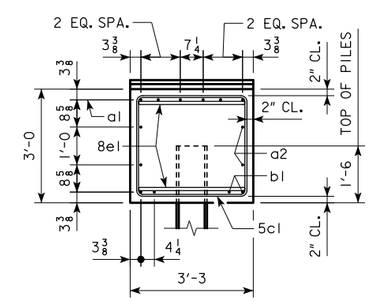

VIEW A-A
FOR 15, 17, 19 & 21 PILE BENTS

LATEST REVISION DATE

APPROVED BY BRIDGE ENGINEER

IOWA DOT Highway Division

STANDARD DESIGN - 40' ROADWAY, THREE SPAN BRIDGE

PRETENSIONED PRESTRESSED CONCRETE BEAM BRIDGES

SEPTEMBER, 2014

PILE BENT PIERS

45° SKEW

H40-54-14

PILE BENT NOTES:

THESE PIER BENTS ARE DESIGNED FOR USE IN LOCATIONS WHERE ICE AND DRIFT CONDITIONS ARE NOT SEVERE.

FOR DETAILS OF TRESTLE PILES, TYPES 1, 2 AND 3, SEE STANDARD PIOL.

MINIMUM CLEAR DISTANCE FROM FACE OF CONCRETE TO NEAR REINFORCING BAR SHALL BE 2 INCHES UNLESS OTHERWISE NOTED OR SHOWN.

PIER PILES SHALL BE DRIVEN TO VALUES SHOWN IN DESIGN PLANS.

REINFORCING BAR LIST AND ESTIMATED QUANTITIES - PER PILE BENT

			9 PILE BENT			11 PILE BENT			13 PILE BENT			15 PILE BENT			17 PILE BENT			19 PILE BENT			21 PILE BENT		
BAR	LENGTH	SHAPE	NO.	SIZE	WEIGHT	NO.	SIZE	WEIGHT	NO.	SIZE	WEIGHT	NO.	SIZE	WEIGHT	NO.	SIZE	WEIGHT	NO.	SIZE	WEIGHT	NO.	SIZE	WEIGHT
a1	57'-8	———	8	9	1569	8	9	1569	8	9	1569	6	9	1176	6	9	1176	6	9	1176	6	9	1176
a2	57'-8	———	4	8	616	4	8	616	4	8	616	4	8	616	4	8	616	4	8	616	4	8	616
b1	57'-8	———	4	10	993	4	10	993	4	10	993	4	10	993	4	9	784	4	9	784	4	9	784
5c1	12'-2	▭	50	5	634	62	5	787	74	5	939	86	5	1091	66	5	838	74	5	939	62	5	787
8e1	8'-4	▭	4	8	89	4	8	89	4	8	89	4	8	89	4	8	89	4	8	89	4	8	89
(1) REINFORCING STEEL (LB.)			3901			4054			4206			3965			3503			3604			3452		
STRUCTURAL CONCRETE (CY) (2)		PILE TYPE 1, 2	-----			-----			22.1			22.0			21.9			21.8			21.8		
		PILE TYPE 3	22.7			22.7			22.7			22.7			-----			-----			-----		

NOTE: THE REINFORCING STEEL QUANTITY IS TO BE INCLUDED ON THE SUMMARY QUANTITIES SHEET IN THE PLAN.

NOTE: THE CONCRETE QUANTITY IS TO BE INCLUDED ON THE SUMMARY QUANTITIES SHEET IN THE PLAN.

NOTE: THE NUMBER OF PILES AND THE PILE TYPE ARE TO BE INCLUDED ON THE SUMMARY QUANTITIES SHEET IN THE PLAN.

BENT BAR DETAILS

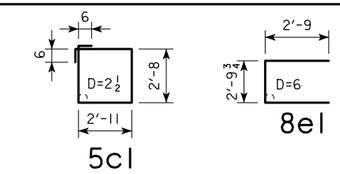

NOTE: ALL DIMENSIONS ARE OUT TO OUT. D=PIN DIAMETER.

℄-℄ ABUTMENT BEARING	FRICTION BEARING PILING — PIOL TYPE 1 OR 2: NUMBER OF TRESTLE PILES	(3) "K" (INCHES)	(4) LRFD PU, STRENGTH I DES. LOAD (KIPS)	FRICTION OR POINT BEARING PILING — PIOL TYPE 3: NUMBER OF TRESTLE PILES	PILE SIZE	(4) LRFD PU, STRENGTH I DES. LOAD (KIPS)
138'-10	15	14	84	9	HP10x57	140
	13	16	97	11	HP12x53	114
151'-4	15	14	88	11	HP10x57	120
	13	16	101	11	HP12x53	120
163'-10	15	14	95	11	HP10x57	130
	15	16	95	11	HP12x53	130
176'-4	17	14	88	11	HP10x57	135
	15	16	99	13	HP12x53	114
188'-10	17	14	91	11	HP10x57	141
	15	16	103	13	HP12x53	119
201'-4	19	14	91	13	HP10x57	132
	17	16	101	13	HP12x53	132
213'-10	19	14	95	13	HP10x57	139
	17	16	106	15	HP12x53	120
226'-4	-----	--	--	15	HP10x57	126
	-----	--	--	15	HP12x53	126
243'-0	-----	--	--	15	HP10x57	133
	-----	--	--	15	HP12x53	133

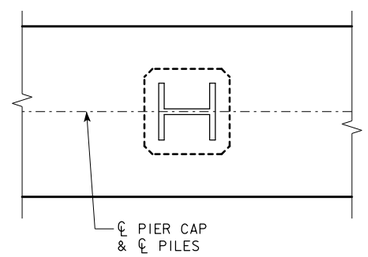

PILE ORIENTATION DETAIL FOR TYPE 3 TRESTLE BENT PILES

(1) SEE SHEET H40-31-14 FOR STEP REINFORCING STEEL QUANTITIES AND DETAILS.

(2) CONCRETE QUANTITIES SHOWN HAVE HAD THE VOLUME OF EMBEDDED PILES DEDUCTED FOR TYPES 1 AND 2 BASED ON 0.8 FT^3 PER FOOT OF EMBEDMENT. THE CONCRETE QUANTITIES FOR TYPE 3 PILES DO NOT REQUIRE REDUCTION FOR PILE EMBEDMENT.

(3) SEE STANDARD PIOL FOR "K" DIMENSION.

(4) NOTE: PU, STRENGTH I DESIGN LOAD (KIPS) IS NOT THE VALUE USED IN THE FIELD FOR DRIVING PILES.

NOTE: FRICTION BEARING INCLUDES SIDE FRICTION AND END BEARING IN SOIL. POINT BEARING INCLUDES SIDE FRICTION AND POINT BEARING IN ROCK.

LATEST REVISION DATE

APPROVED BY BRIDGE ENGINEER

IOWA DOT Highway Division

STANDARD DESIGN - 40' ROADWAY, THREE SPAN BRIDGE

PRETENSIONED PRESTRESSED CONCRETE BEAM BRIDGES

SEPTEMBER, 2014

PILE BENT PIERS

45° SKEW

H40-55-14

PILE BENT NOTES:

THESE PIER BENTS ARE DESIGNED FOR USE IN LOCATIONS WHERE ICE AND DRIFT CONDITIONS ARE NOT SEVERE.

FOR DETAILS OF TRESTLE PILES, SEE STANDARD PIOL.

MINIMUM CLEAR DISTANCE FROM FACE OF CONCRETE TO NEAR REINFORCING BAR SHALL BE 2 INCHES UNLESS OTHERWISE NOTED OR SHOWN.

PIER PILES SHALL BE DRIVEN TO VALUES SHOWN IN DESIGN PLANS.

NOTE: THE REINFORCING STEEL QUANTITY IS TO BE INCLUDED ON THE SUMMARY QUANTITIES SHEET IN THE PLAN.

NOTE: THE CONCRETE QUANTITY IS TO BE INCLUDED ON THE SUMMARY QUANTITIES SHEET IN THE PLAN.

NOTE: THE NUMBER OF PILES AND THE PILE TYPE ARE TO BE INCLUDED ON THE SUMMARY QUANTITIES SHEET IN THE PLAN.

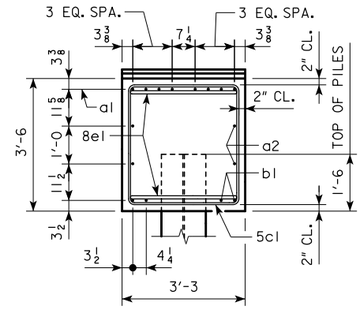

VIEW A-A
FOR 8, 9, 10 & 11 PILE BENTS

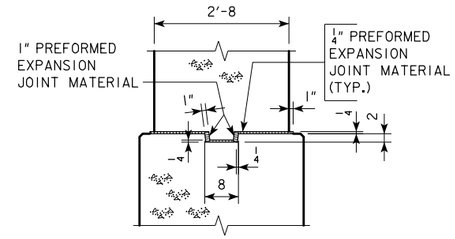

KEYED NOTCH DETAIL

REINFORCING BAR LIST AND ESTIMATED QUANTITIES - PER PILE BENT

			8 PILE BENT			9 PILE BENT			10 PILE BENT			11 PILE BENT		
BAR	LENGTH	SHAPE	NO.	SIZE	WEIGHT	NO.	SIZE	WEIGHT	NO.	SIZE	WEIGHT	NO.	SIZE	WEIGHT
a1	57'-8		8	9	1569	8	9	1569	8	9	1569	8	9	1569
a2	57'-8		4	8	616	4	8	616	4	8	616	4	8	616
b1	57'-8		4	10	993	4	10	993	4	10	993	4	10	993
5c1	13'-2		54	5	742	62	5	851	56	5	769	62	5	851
8e1	8'-4		4	8	89	4	8	89	4	8	89	4	8	89
(1) REINFORCING STEEL (LB.)			4009			4118			4036			4118		
STRUCTURAL		PILE TYPE												
CONCRETE (CY)		3	26.2			26.2			26.2			26.2		

BENT BAR DETAILS

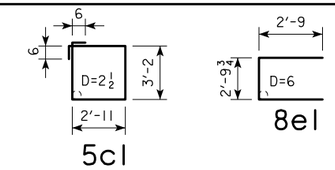

NOTE: ALL DIMENSIONS ARE OUT TO OUT. D=PIN DIAMETER.

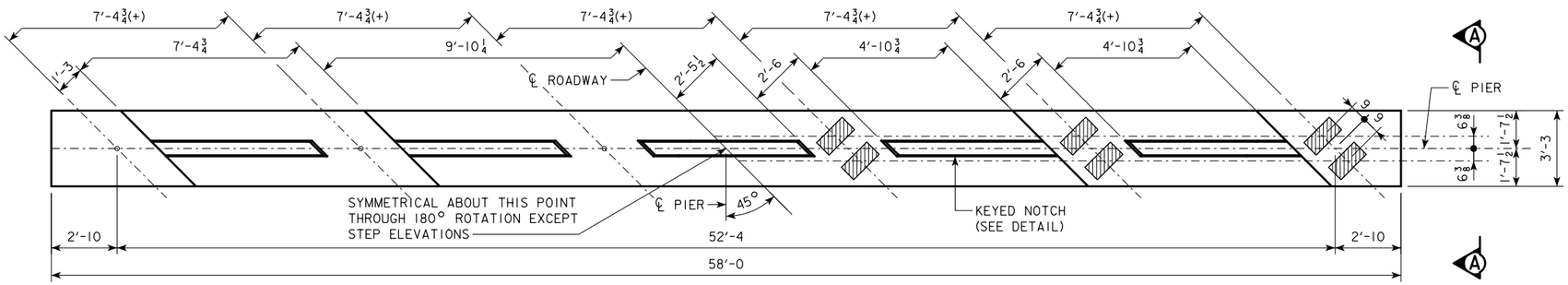

TYPICAL PLAN

FRICTION OR POINT BEARING PILING

℄-℄ ABUTMENT BEARING	PIOL TYPE 3		
	NUMBER OF TRESTLE PILES	PILE SIZE	(2) LRFD PU, STRENGTH I DES. LOAD (KIPS)
138'-10	8	HP14x73	159
	8	HP14x89	159
151'-4	8	HP14x73	167
	8	HP14x89	167
163'-10	8	HP14x73	180
	8	HP14x89	180
176'-4	9	HP14x73	167
	8	HP14x89	188
188'-10	9	HP14x73	174
	8	HP14x89	196
201'-4	10	HP14x73	174
	8	HP14x89	217
213'-10	10	HP14x73	182
	9	HP14x89	202
226'-4	11	HP14x73	174
	9	HP14x89	213
243'-0	11	HP14x73	183
	9	HP14x89	223

(1) SEE SHEET H40-31-14 FOR STEP REINFORCING STEEL QUANTITIES AND DETAILS.

(2) NOTE: PU, STRENGTH I DESIGN LOAD (KIPS) IS NOT THE VALUE USED IN THE FIELD FOR DRIVING PILES.

NOTE: FRICTION BEARING INCLUDES SIDE FRICTION AND END BEARING IN SOIL. POINT BEARING INCLUDES SIDE FRICTION AND POINT BEARING IN ROCK.

NOTE:
THE HEIGHT OF THE STEPS ON THE BRIDGE SEAT IS EQUAL TO THE DIFFERENCE IN ELEVATIONS OF THE TOP OF SLAB AT ADJACENT BEAMS ALONG ℄ PIER.
SEE SHEET H40-29-14 FOR "U" DIMENSION.

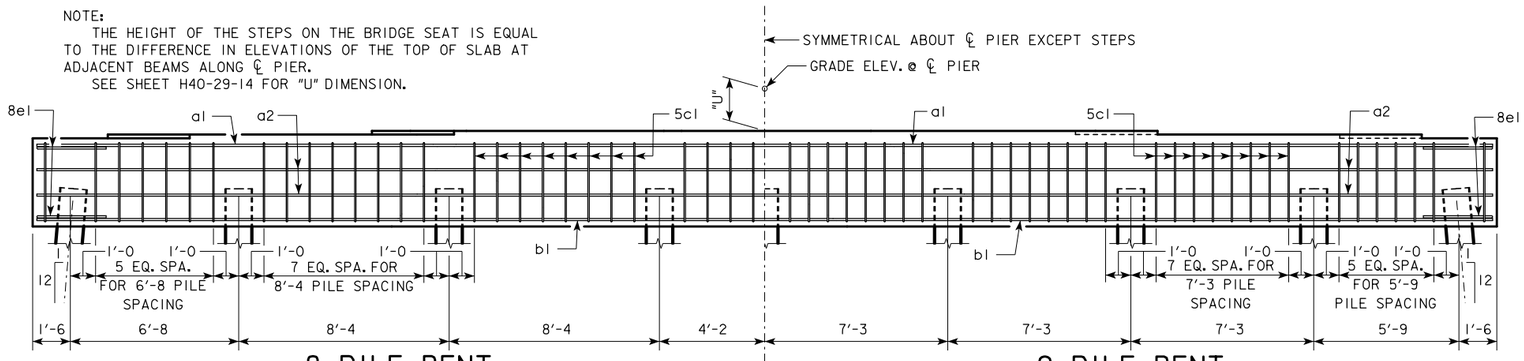

8 PILE BENT

9 PILE BENT

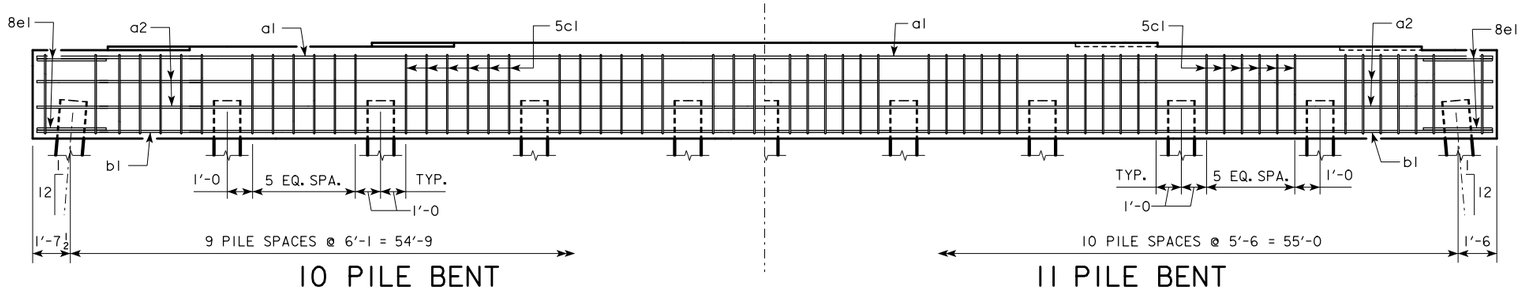

10 PILE BENT

11 PILE BENT

LATEST REVISION DATE

APPROVED BY BRIDGE ENGINEER

IOWA DOT Highway Division

STANDARD DESIGN - 40' ROADWAY, THREE SPAN BRIDGE

PRETENSIONED PRESTRESSED CONCRETE BEAM BRIDGES

SEPTEMBER, 2014

PILE BENT PIERS HP14 PILES

45° SKEW

H40-56-14

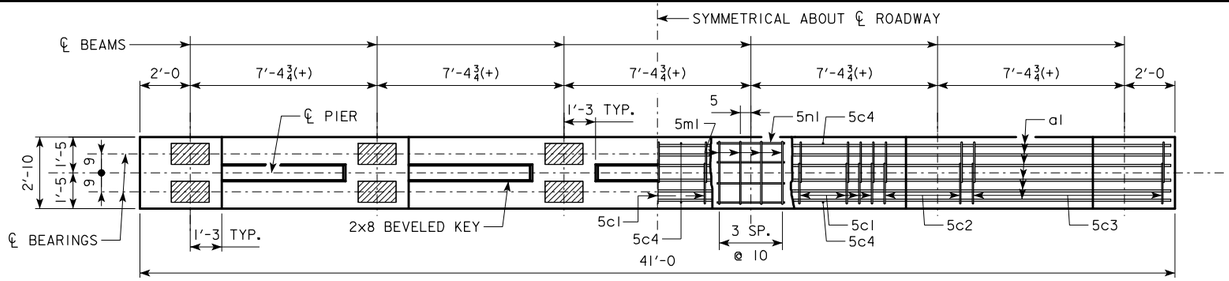

CAP PLAN

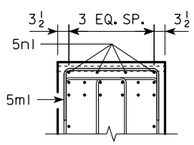

5m1 & 5n1
BAR LAYOUT

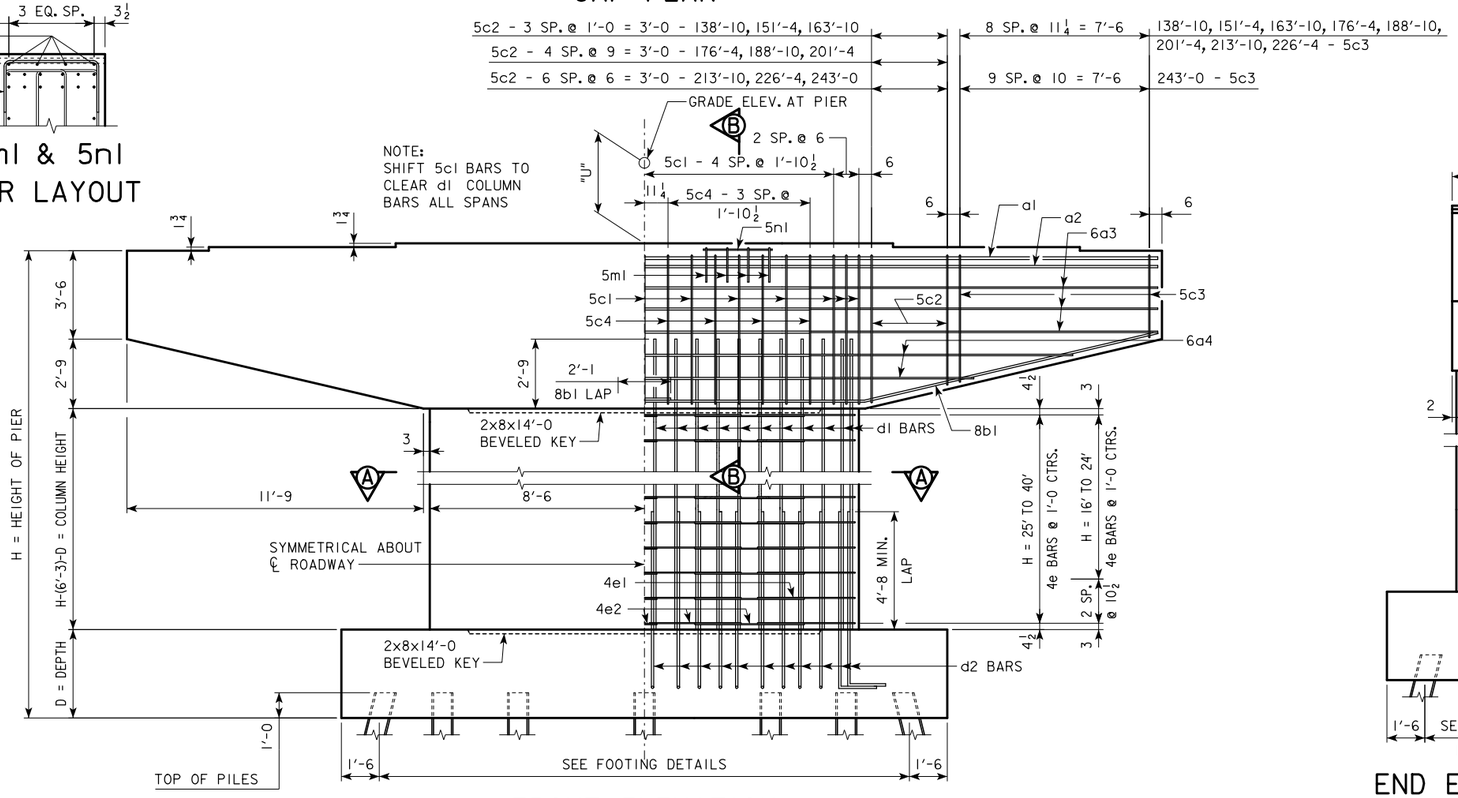

FRONT ELEVATION

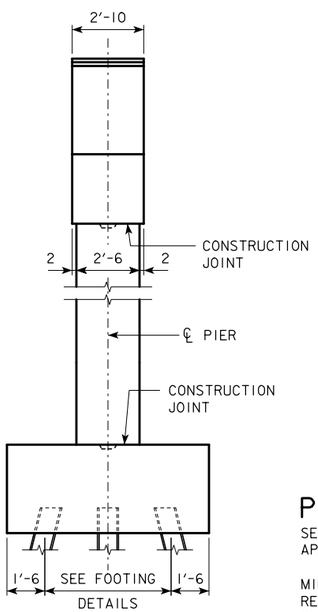

END ELEVATION

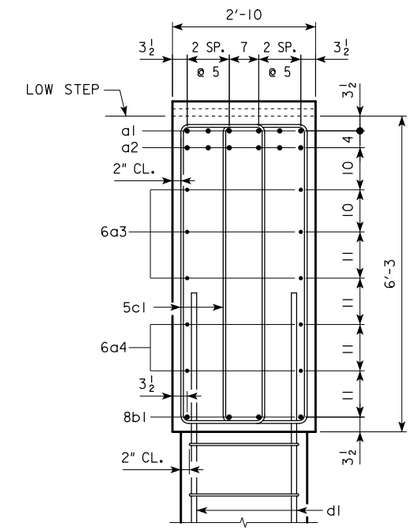

SECTION B-B

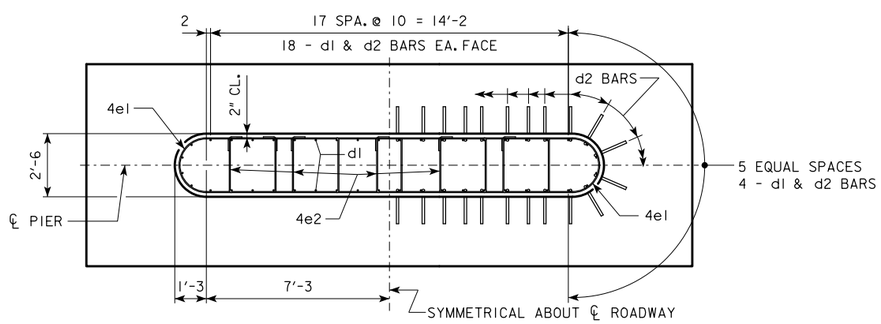

SECTION A-A

PIER NOTES:

SEE "TEE PIER NOTES" ON H40-02-14 FOR NOTES REGARDING APPLICATION OF THESE PIER STANDARDS.

MINIMUM CLEAR DISTANCE FROM FACE OF CONCRETE TO NEAR REINFORCING BAR SHALL BE 2 INCHES UNLESS OTHERWISE NOTED OR SHOWN.

ELIMINATE 2x8 BEVELED KEYWAY ON TOP OF CAP FOR EXPANSION PIERS.

FOR SIZE OF BEARING PADS, SEE H40-44-14.

SEE SHEET H40-09-14 FOR "U" DIMENSION.

LATEST REVISION DATE

APPROVED BY BRIDGE ENGINEER

IOWA DOT Highway Division

STANDARD DESIGN - 40' ROADWAY, THREE SPAN BRIDGE

PRETENSIONED PRESTRESSED CONCRETE BEAM BRIDGES

SEPTEMBER, 2014

TEE PIER CAP AND COLUMN

0° SKEW

H40-57-14

BENT BAR DETAILS

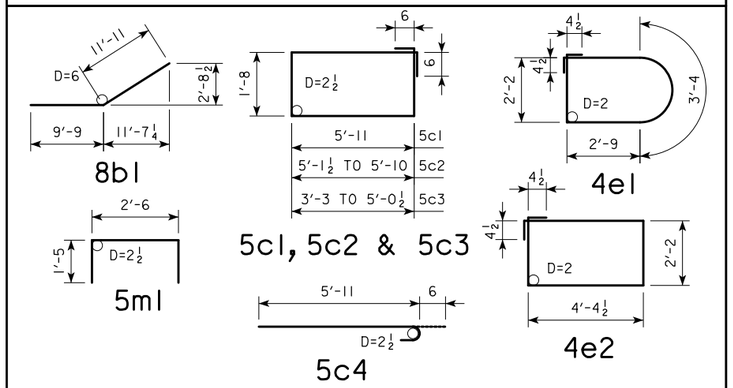

NOTE: ALL DIMENSIONS ARE OUT TO OUT.
D = PIN DIAMETER.

CAP

REINFORCING STEEL																													
℄ - ℄ ABUT. BEARINGS			138'-10			151'-4			163'-10			176'-4			188'-10			201'-4			213'-10			226'-4			243'-0		
BAR	LENGTH	SHAPE	NO.	SIZE	WEIGHT	NO.	SIZE	WEIGHT	NO.	SIZE	WEIGHT	NO.	SIZE	WEIGHT	NO.	SIZE	WEIGHT	NO.	SIZE	WEIGHT	NO.	SIZE	WEIGHT	NO.	SIZE	WEIGHT	NO.	SIZE	WEIGHT
a1	40'-8		6	9	830	6	9	830	6	10	1050	6	10	1050	6	10	1050	6	11	1296	6	11	1296	6	11	1296	6	11	1296
a2	40'-8		6	9	830	6	9	830	6	9	830	6	9	830	6	10	1050	6	10	1050	6	10	1050	6	11	1296	6	11	1296
6a3	40'-8		6	6	366	6	6	366	6	6	366	6	6	366	6	6	366	6	6	366	6	6	366	6	6	366	6	6	366
6a4	VARIES		4	6	182	4	6	182	4	6	182	4	6	182	4	6	182	4	6	182	4	6	182	4	6	182	4	6	182
8b1	21'-8		8	8	463	8	8	463	8	8	463	8	8	463	8	8	463	8	8	463	8	8	463	8	8	463	8	8	463
5c1	16'-2		26	5	438	26	5	438	26	5	438	26	5	438	26	5	438	26	5	438	26	5	438	26	5	438	26	5	438
5c2	VARIES		16	5	255	16	5	255	16	5	255	20	5	319	20	5	319	20	5	319	28	5	447	28	5	447	28	5	447
5c3	VARIES		36	5	474	36	5	474	36	5	474	36	5	474	36	5	474	36	5	474	36	5	474	36	5	474	40	5	527
5c4	6'-5		16	5	107	16	5	107	16	5	107	16	5	107	16	5	107	16	5	107	16	5	107	16	5	107	16	5	107
5m1	5'-4		8	5	45	8	5	45	8	5	45	8	5	45	8	5	45	8	5	45	8	5	45	8	5	45	8	5	45
5n1	2'-8		8	5	22	8	5	22	8	5	22	8	5	22	8	5	22	8	5	22	8	5	22	8	5	22	8	5	22
TOTAL (LB.)			4012			4012			4232			4296			4516			4762			4890			5136			5189		
STRUCTURAL CONCRETE (CY)			24.3			24.3			24.3			24.3			24.3			24.3			24.3			24.3			24.3		

COLUMN

H IN FEET	COLUMN HEIGHT	STRUCTURAL CONCRETE (CY)	REINFORCING STEEL																TOTAL WEIGHT (LB.)
			d1 BAR				4e1 BAR				4e2 BAR								
			NO.	SIZE	LENGTH	WEIGHT	NO.	SIZE	LENGTH	WEIGHT	NO.	SIZE	LENGTH	WEIGHT					
16	6'-3	9.5	44	9	9'-0	1346	14	4	11'-9	110	28	4	13'-10	259	1715				
17	7'-3	11.1	44	9	10'-0	1496	16	4	11'-9	126	32	4	13'-10	296	1918				
18	8'-3	12.6	44	9	11'-0	1646	18	4	11'-9	141	36	4	13'-10	333	2120				
19	9'-3	14.1	44	9	12'-0	1795	20	4	11'-9	157	40	4	13'-10	370	2322				
20	10'-3	15.6	44	9	13'-0	1945	22	4	11'-9	173	44	4	13'-10	407	2525				
21	11'-3	17.1	44	9	14'-0	2094	24	4	11'-9	188	48	4	13'-10	444	2726				
22	12'-3	18.7	44	9	15'-0	2244	26	4	11'-9	204	52	4	13'-10	481	2929				
23	13'-3	20.2	44	9	16'-0	2394	28	4	11'-9	220	56	4	13'-10	517	3131				
24	14'-3	21.7	44	9	17'-0	2543	30	4	11'-9	235	60	4	13'-10	554	3332				
25	14'-9	22.5	44	9	17'-6	2618	30	4	11'-9	235	60	4	13'-10	554	3407				
26	15'-9	24.0	44	9	18'-6	2768	32	4	11'-9	251	64	4	13'-10	591	3610				
27	16'-9	25.5	44	9	19'-6	2917	34	4	11'-9	267	68	4	13'-10	628	3812				
28	17'-9	27.1	44	9	20'-6	3067	36	4	11'-9	283	72	4	13'-10	665	4015				
29	18'-9	28.6	44	9	21'-6	3216	38	4	11'-9	298	76	4	13'-10	702	4216				
30	19'-9	30.1	44	9	22'-6	3366	40	4	11'-9	314	80	4	13'-10	739	4419				
31	20'-9	31.6	44	9	23'-6	3516	42	4	11'-9	330	84	4	13'-10	776	4622				
32	21'-9	33.2	44	9	24'-6	3665	44	4	11'-9	345	88	4	13'-10	813	4823				
33	22'-9	34.7	44	9	25'-6	3815	46	4	11'-9	361	92	4	13'-10	850	5026				
34	23'-9	36.2	44	9	26'-6	3964	48	4	11'-9	377	96	4	13'-10	887	5228				
35	24'-9	37.7	44	9	27'-6	4114	50	4	11'-9	392	100	4	13'-10	924	5430				
36	25'-9	39.3	44	9	28'-6	4264	52	4	11'-9	408	104	4	13'-10	961	5633				
37	26'-9	40.8	44	9	29'-6	4413	54	4	11'-9	424	108	4	13'-10	998	5835				
38	27'-9	42.3	44	9	30'-6	4563	56	4	11'-9	440	112	4	13'-10	1035	6038				
39	28'-9	43.8	44	9	31'-6	4712	58	4	11'-9	455	116	4	13'-10	1072	6239				
40	29'-9	45.4	44	9	32'-6	4862	60	4	11'-9	471	120	4	13'-10	1109	6442				

NOTE: THE REINFORCING STEEL QUANTITIES FOR THE CAP AND COLUMN ARE TO BE INCLUDED ON THE SUMMARY QUANTITIES SHEET IN THE PLAN.

NOTE: THE CONCRETE QUANTITIES FOR THE CAP AND COLUMN COLUMN ARE TO BE INCLUDED ON THE SUMMARY QUANTITIES SHEET IN THE PLAN.

LATEST REVISION DATE

APPROVED BY BRIDGE ENGINEER

IOWA DOT Highway Division

STANDARD DESIGN - 40' ROADWAY, THREE SPAN BRIDGE

PRETENSIONED PRESTRESSED CONCRETE BEAM BRIDGES

SEPTEMBER, 2014

TEE PIER CAP AND COLUMN

0° SKEW

H40-58-14

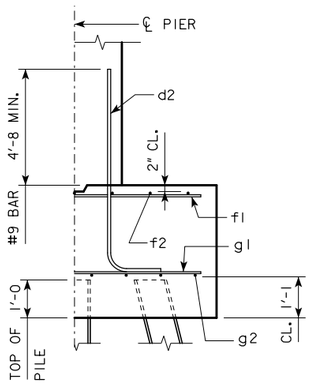

TYPICAL SECTION

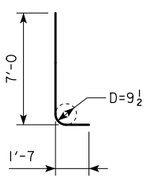

d2

NOTE: D = PIN DIAMETER.
DIMENSIONS ARE OUT TO OUT.

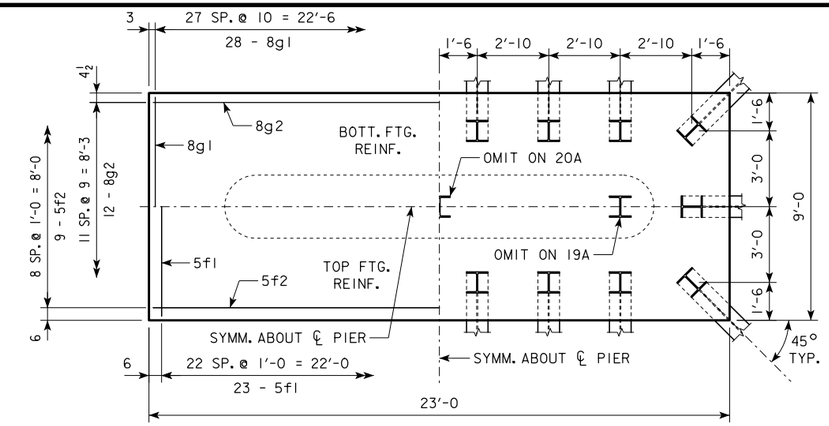

3'-6 x 9'-0 x 23'-0 FOR 19A, 20A & 21A

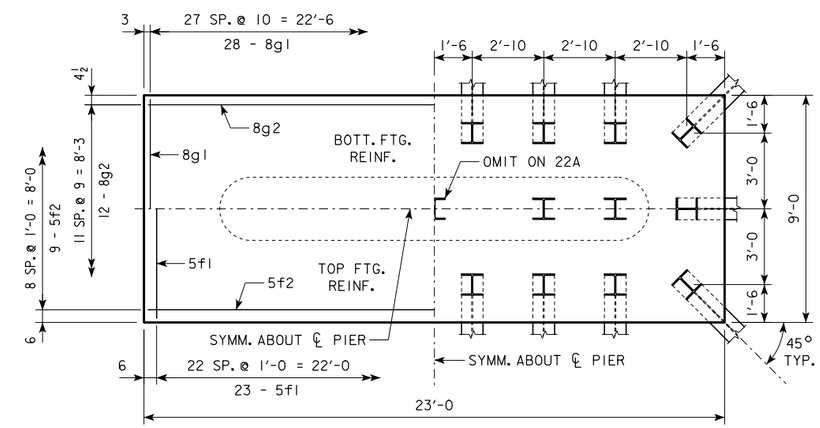

3'-6 x 9'-0 x 23'-0 FOR 22A & 23A

NOTE: THE REINFORCING STEEL QUANTITY IS TO BE INCLUDED ON THE SUMMARY QUANTITIES SHEET IN THE PLAN.

NOTE: THE CONCRETE QUANTITY IS TO BE INCLUDED ON THE SUMMARY QUANTITIES SHEET IN THE PLAN.

NOTE: THE PILE TYPE IS TO BE INCLUDED ON THE SUMMARY QUANTITIES SHEET IN THE PLAN.

H IN FT.	℄ - ℄ ABUT. BRG.	PILING (HP10x57) NO. & LAYOUT	PILING (HP10x57) ① LRFD PU, STRENGTH I DES. LOAD (KIPS)	FOOTING SIZE
16 TO 18	201'-4	19A	145	3'-6 x 9' x 23'
	213'-10	20A	141	
	226'-4	21A	144	
	243'-0	22A	144	
19 TO 21	201'-4	20A	139	3'-6 x 9' x 23'
	213'-10	20A	144	
	226'-4	21A	146	
	243'-0	23A	143	
22 TO 24	201'-4	20A	141	3'-6 x 9' x 23'
	213'-10	20A	146	
	226'-4	22A	143	
	243'-0	23A	145	

FOOTING SIZE	REINFORCING STEEL (ONE FOOTING) BAR	NO., SIZE & SPACING	LENGTH	WEIGHT (LB.)	TOTAL WEIGHT (LB.)	STRUCTURAL CONCRETE (CY)
3'-6 x 9' x 23'	d2	44 - #9 AS SHOWN	8'-7	1284	3079	26.8
	f1	23 - #5 @ 1'-0	8'-8	208		
	f2	9 - #5 @ 1'-0	22'-8	213		
	g1	28 - #8 @ 0'-10	8'-8	648		
	g2	12 - #8 @ 0'-9	22'-8	726		

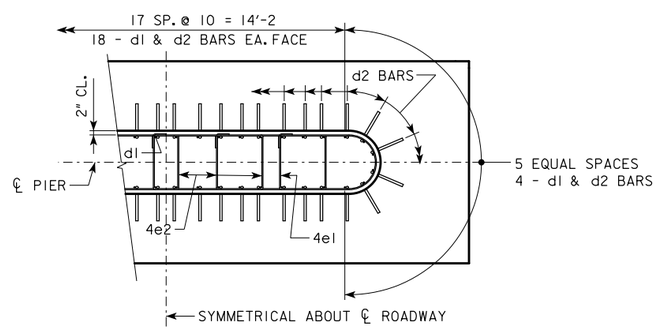

d2 BAR LAYOUT

(SEE SECTION A-A ON SHEET H40-57-14.)

① NOTE: PU, STRENGTH I DESIGN LOAD (KIPS) IS NOT THE VALUE USED IN THE FIELD FOR DRIVING PILES.

LATEST REVISION DATE

APPROVED BY BRIDGE ENGINEER

IOWA DOT Highway Division

STANDARD DESIGN - 40' ROADWAY, THREE SPAN BRIDGE

PRETENSIONED PRESTRESSED CONCRETE BEAM BRIDGES

SEPTEMBER, 2014

TEE PIER-HP10x57 SRL-I STEEL PILE FOOTINGS

0° SKEW - H=16' TO 24'

H40-59-14

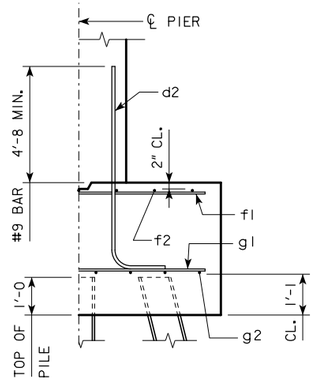

TYPICAL SECTION

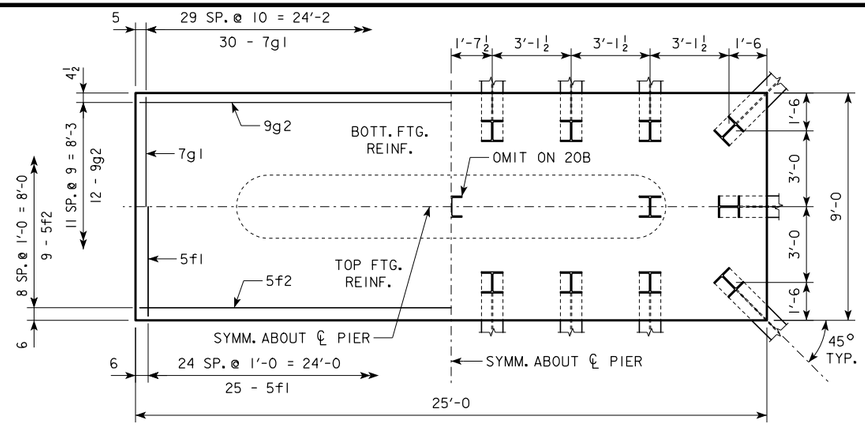

4'-0 x 9'-0 x 25'-0 FOR 20B & 21B

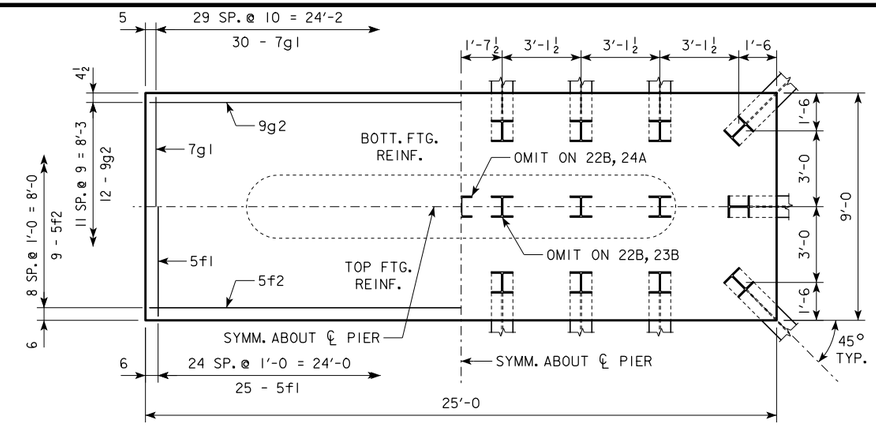

4'-0 x 9'-0 x 25'-0 FOR 22B, 23B & 24A

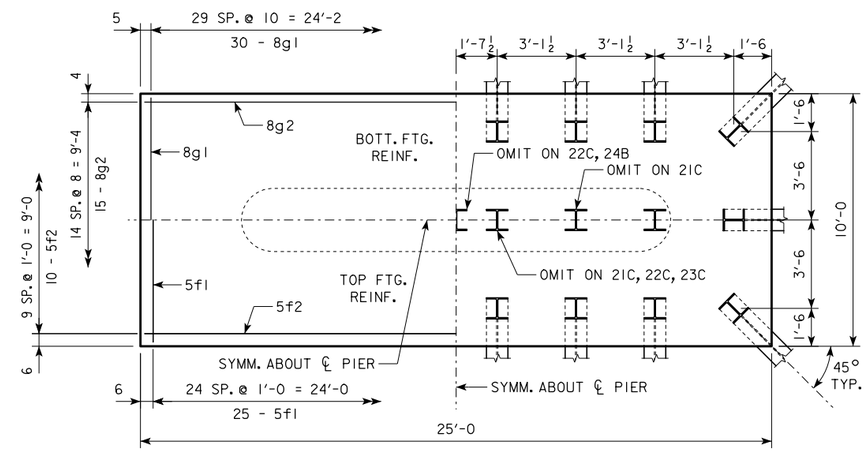

4'-0 x 10'-0 x 25'-0 FOR 21C, 22C, 23C & 24B

H IN FT.	℄ - ℄ ABUT. BRG.	PILING (HP10x57) NO. & LAYOUT	PILING (HP10x57) ① LRFD PU, STRENGTH I DES. LOAD (KIPS)	FOOTING SIZE
25 TO 27	201'-4	20B	141	4' x 9' x 25'
	213'-10	20B	146	
	226'-4	22B	142	
	243'-0	23B	144	
28 TO 30	201'-4	20B	143	4' x 9' x 25'
	213'-10	21B	144	
	226'-4	22B	144	
	243'-0	23B	146	
31 TO 33	201'-4	20B	145	4' x 9' x 25'
	213'-10	21B	146	
	226'-4	22B	146	
	243'-0	24A	144	
34 TO 36	201'-4	21B	143	4' x 9' x 25'
	213'-10	22B	142	
	226'-4	23B	144	
	243'-0	24A	146	
37 TO 40	201'-4	21C	143	4' x 10' x 25'
	213'-10	22C	143	
	226'-4	23C	145	
	243'-0	24B	147	

NOTE: THE REINFORCING STEEL QUANTITY IS TO BE INCLUDED ON THE SUMMARY QUANTITIES SHEET IN THE PLAN.

NOTE: THE CONCRETE QUANTITY IS TO BE INCLUDED ON THE SUMMARY QUANTITIES SHEET IN THE PLAN.

NOTE: THE PILE TYPE IS TO BE INCLUDED ON THE SUMMARY QUANTITIES SHEET IN THE PLAN.

FOOTING SIZE	REINFORCING STEEL (ONE FOOTING) BAR	NO., SIZE & SPACING	LENGTH	WEIGHT (LB.)	TOTAL WEIGHT (LB.)	STRUCTURAL CONCRETE (CY)
4' x 9' x 25'	d2	44 - #9 AS SHOWN	9'-1	1359	3354	33.3
	f1	25 - #5 @ 1'-0	8'-8	226		
	f2	9 - #5 @ 1'-0	24'-8	232		
	g1	30 - #7 @ 0'-10	8'-8	531		
	g2	12 - #9 @ 0'-9	24'-8	1006		
4' x 10' x 25'	d2	44 - #9 AS SHOWN	9'-1	1359	3630	37.0
	f1	25 - #5 @ 1'-0	9'-8	252		
	f2	10 - #5 @ 1'-0	24'-8	257		
	g1	30 - #8 @ 0'-10	9'-8	774		
	g2	15 - #8 @ 0'-8	24'-8	988		

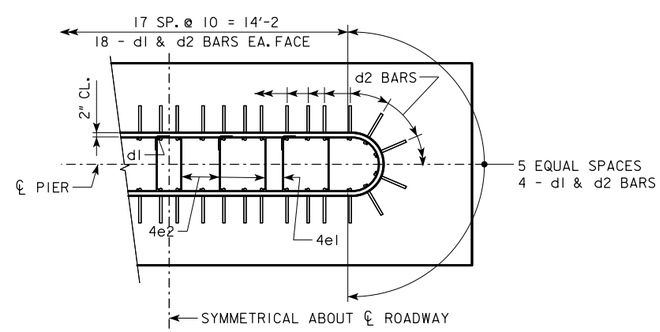

d2 BAR LAYOUT

(SEE SECTION A-A ON SHEET H40-57-14.)

① NOTE: PU, STRENGTH I DESIGN LOAD (KIPS) IS NOT THE VALUE USED IN THE FIELD FOR DRIVING PILES.

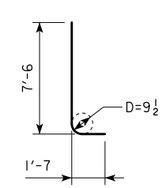

d2

NOTE: D = PIN DIAMETER. DIMENSIONS ARE OUT TO OUT.

FOOTING NOTES:

THESE FOOTINGS ARE DESIGNED AND DETAILED TO BE USED WITH THE CAP AND COLUMN DETAILS OF THE TEE PIERS AS SHOWN ON SHEET H40-57-14.

BATTER PILES IN EXTERIOR ROWS 1:4 IN THE DIRECTION SHOWN.

STEEL PILING USED AS POINT BEARING SHALL HAVE A MINIMUM DISTANCE OF APPROXIMATELY 10 FEET FROM BOTTOM OF FOOTING TO TOP OF BEARING ROCK. THE PILE LAYOUTS ARE SUCH THAT THE DISTANCE CENTER TO CENTER OF ADJACENT PILING SHALL NOT EXCEED 8'-0.

PIER PILES SHALL BE DRIVEN TO VALUES SHOWN IN DESIGN PLANS.

LATEST REVISION DATE

APPROVED BY BRIDGE ENGINEER

IOWA DOT Highway Division

STANDARD DESIGN - 40' ROADWAY, THREE SPAN BRIDGE

PRETENSIONED PRESTRESSED CONCRETE BEAM BRIDGES

SEPTEMBER, 2014

TEE PIER-HP10x57 SRL-1 STEEL PILE FOOTINGS

0° SKEW - H=25' TO 40'

H40-60-14

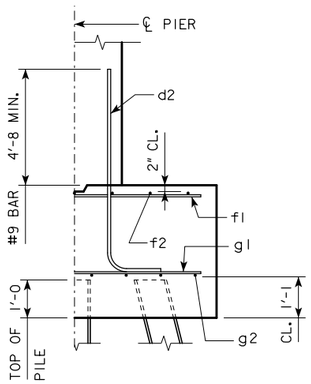

TYPICAL SECTION

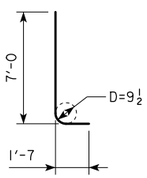

d2

NOTE: D = PIN DIAMETER.
DIMENSIONS ARE OUT TO OUT.

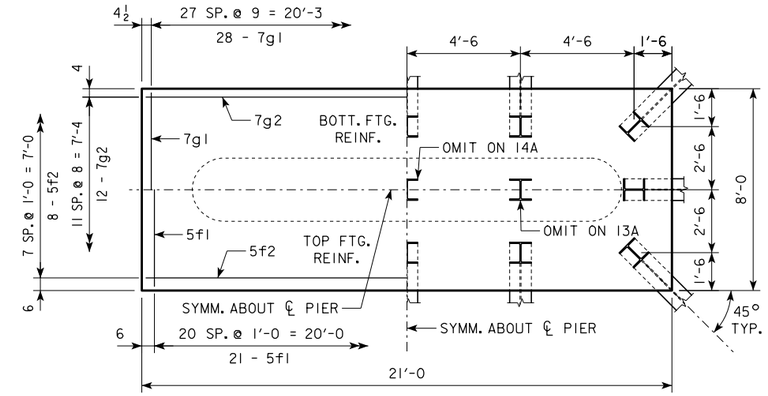

3'-6 x 8'-0 x 21'-0 FOR 13A, 14A & 15A

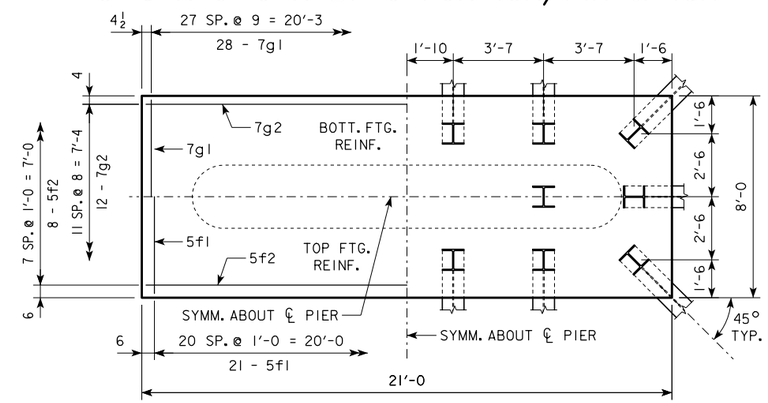

3'-6 x 8'-0 x 21'-0 FOR 16A

NOTE: THE REINFORCING STEEL QUANTITY IS TO BE INCLUDED ON THE SUMMARY QUANTITIES SHEET IN THE PLAN.

NOTE: THE CONCRETE QUANTITY IS TO BE INCLUDED ON THE SUMMARY QUANTITIES SHEET IN THE PLAN.

NOTE: THE PILE TYPE IS TO BE INCLUDED ON THE SUMMARY QUANTITIES SHEET IN THE PLAN.

H IN FT.	℄ - ℄ ABUT. BRG.	PILING (HP10x57) NO. & LAYOUT	PILING (HP10x57) ① LRFD PU, STRENGTH I DES. LOAD (KIPS)	FOOTING SIZE
16 TO 18	201'-4	13A	213	3'-6 x 8' x 21'
	213'-10	14A	207	
	226'-4	14A	217	
	243'-0	15A	217	
19 TO 21	201'-4	13A	217	3'-6 x 8' x 21'
	213'-10	14A	212	
	226'-4	15A	213	
	243'-0	16A	202	
22 TO 24	201'-4	14A	208	3'-6 x 8' x 21'
	213'-10	14A	216	
	226'-4	15A	217	
	243'-0	16A	206	

FOOTING SIZE	REINFORCING STEEL (ONE FOOTING) BAR	NO., SIZE & SPACING	LENGTH	WEIGHT (LB.)	TOTAL WEIGHT (LB.)	STRUCTURAL CONCRETE (CY)
3'-6 x 8' x 21'	d2	44 - #9 AS SHOWN	8'-7	1284	2570	21.8
	f1	21 - #5 @ 1'-0	7'-8	168		
	f2	8 - #5 @ 1'-0	20'-8	172		
	g1	28 - #7 @ 0'-9	7'-8	439		
	g2	12 - #7 @ 0'-8	20'-8	507		

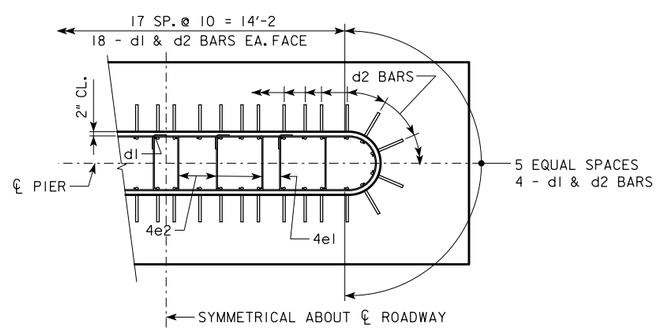

d2 BAR LAYOUT
(SEE SECTION A-A ON SHEET H40-57-14.)

① NOTE: PU, STRENGTH I DESIGN LOAD (KIPS) IS NOT THE VALUE USED IN THE FIELD FOR DRIVING PILES.

FOOTING NOTES:

THESE FOOTINGS ARE DESIGNED AND DETAILED TO BE USED WITH THE CAP AND COLUMN DETAILS OF THE TEE PIERS AS SHOWN ON SHEET H40-57-14.

BATTER PILES IN EXTERIOR ROWS 1:4 IN THE DIRECTION SHOWN.

STEEL PILING USED AS POINT BEARING SHALL HAVE A MINIMUM DISTANCE OF APPROXIMATELY 10 FEET FROM BOTTOM OF FOOTING TO TOP OF BEARING ROCK. THE PILE LAYOUTS ARE SUCH THAT THE DISTANCE CENTER TO CENTER OF ADJACENT PILING SHALL NOT EXCEED 8'-0.

PIER PILES SHALL BE DRIVEN TO VALUES SHOWN IN DESIGN PLANS.

LATEST REVISION DATE

APPROVED BY BRIDGE ENGINEER

IOWA DOT Highway Division

STANDARD DESIGN - 40' ROADWAY, THREE SPAN BRIDGE

PRETENSIONED PRESTRESSED CONCRETE BEAM BRIDGES

SEPTEMBER, 2014

TEE PIER-HP10x57 SRL-2 STEEL PILE FOOTINGS

0° SKEW - H=16' TO 24'

H40-61-14

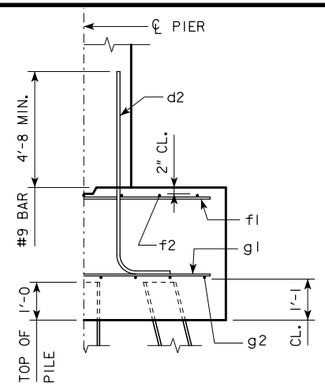

TYPICAL SECTION

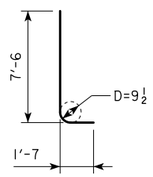

d2

NOTE: D = PIN DIAMETER.
DIMENSIONS ARE OUT TO OUT.

H IN FT.	℄ - ℄ ABUT. BRG.	PILING (HP10x57) NO. & LAYOUT	① LRFD PU, STRENGTH I DES. LOAD (KIPS)	FOOTING SIZE
25 TO 27	201'-4	14B	208	4' x 9' x 21'
	213'-10	14B	216	
	226'-4	15B	216	
	243'-0	16B	206	
28 TO 30	201'-4	14C	203	4' x 9' x 23'
	213'-10	14C	210	
	226'-4	15C	210	
	243'-0	16C	206	
31 TO 33	201'-4	14C	206	4' x 9' x 23'
	213'-10	14C	213	
	226'-4	15C	213	
	243'-0	16C	209	
34 TO 36	201'-4	14D	204	4' x 10' x 24'
	213'-10	14D	211	
	226'-4	15D	210	
	243'-0	16D	206	
37 TO 40	201'-4	14D	208	4' x 10' x 24'
	213'-10	14D	216	
	226'-4	15D	215	
	243'-0	16D	212	

FOOTING SIZE	REINFORCING STEEL (ONE FOOTING) BAR	NO., SIZE & SPACING	LENGTH	WEIGHT (LB.)	TOTAL WEIGHT (LB.)	STRUCTURAL CONCRETE (CY)
4' x 9' x 21'	d2	44 - #9 AS SHOWN	9'-1	1359	2744	28.0
	f1	21 - #5 @ 1'-0	8'-8	190		
	f2	9 - #5 @ 1'-0	20'-8	194		
	g1	25 - #8 @ 0'-10	8'-8	579		
	g2	10 - #7 @ 0'-11	20'-8	422		
4' x 9' x 23'	d2	44 - #9 AS SHOWN	9'-1	1359	3123	30.7
	f1	23 - #5 @ 1'-0	8'-8	208		
	f2	9 - #5 @ 1'-0	22'-8	213		
	g1	28 - #7 @ 0'-10	8'-8	496		
	g2	14 - #8 @ 0'-7½	22'-8	847		
4' x 10' x 24'	d2	44 - #9 AS SHOWN	9'-1	1359	3591	35.6
	f1	24 - #5 @ 1'-0	9'-8	242		
	f2	10 - #5 @ 1'-0	23'-8	247		
	g1	27 - #8 @ 0'-10½	9'-8	697		
	g2	13 - #9 @ 0'-9½	23'-8	1046		

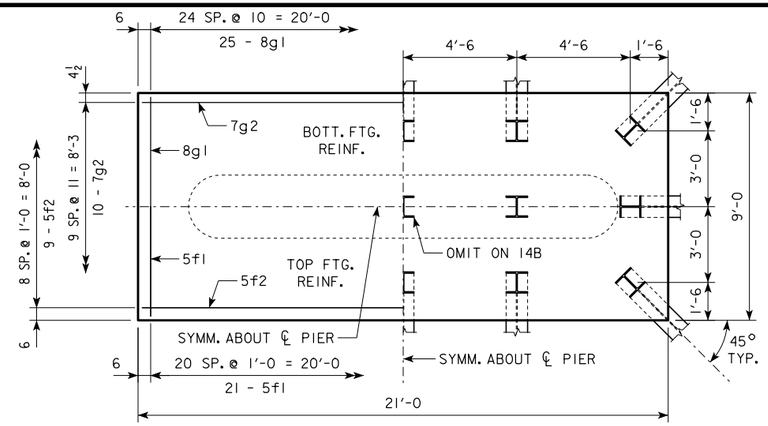

4'-0 x 9'-0 x 21'-0 FOR 14B & 15B

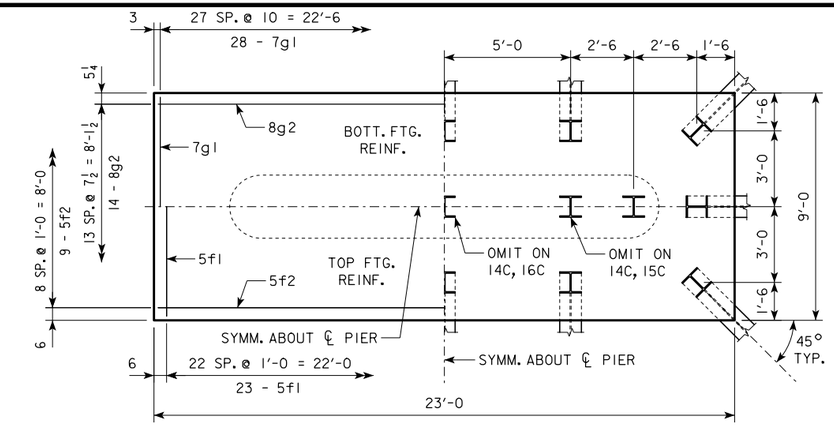

4'-0 x 9'-0 x 23'-0 FOR 14C, 15C & 16C

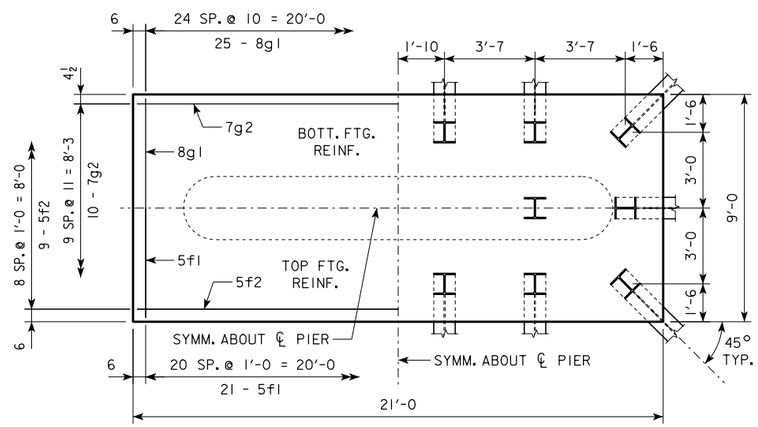

4'-0 x 9'-0 x 21'-0 FOR 16B

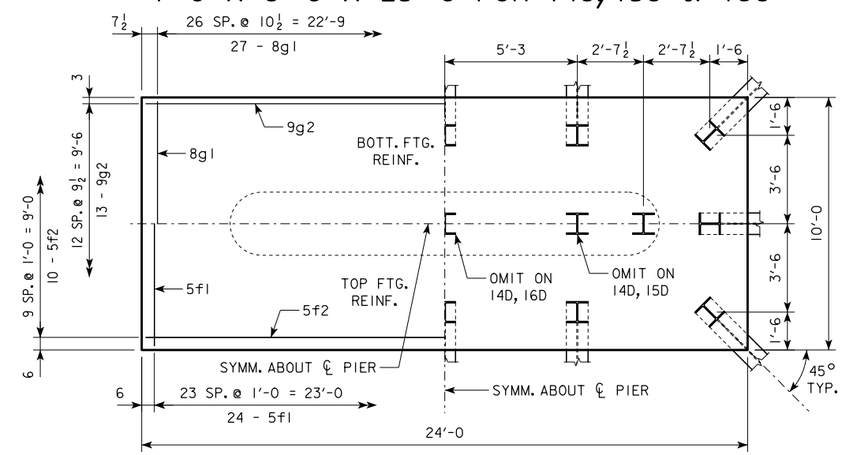

4'-0 x 10'-0 x 24'-0 FOR 14D, 15D & 16D

NOTE: THE REINFORCING STEEL QUANTITY IS TO BE INCLUDED ON THE SUMMARY QUANTITIES SHEET IN THE PLAN.

NOTE: THE CONCRETE QUANTITY IS TO BE INCLUDED ON THE SUMMARY QUANTITIES SHEET IN THE PLAN.

NOTE: THE PILE TYPE IS TO BE INCLUDED ON THE SUMMARY QUANTITIES SHEET IN THE PLAN.

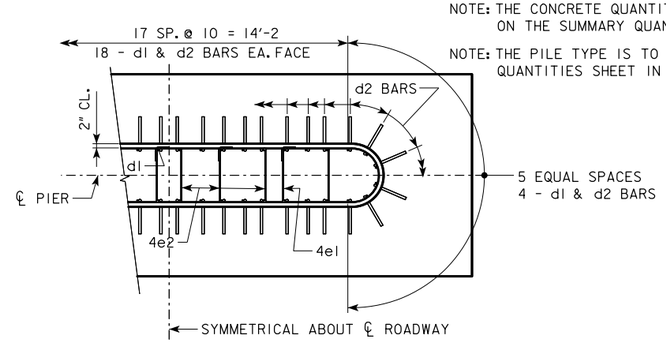

d2 BAR LAYOUT
(SEE SECTION A-A ON SHEET H40-57-14.)

① NOTE: PU, STRENGTH I DESIGN LOAD (KIPS) IS NOT THE VALUE USED IN THE FIELD FOR DRIVING PILES.

FOOTING NOTES:

THESE FOOTINGS ARE DESIGNED AND DETAILED TO BE USED WITH THE CAP AND COLUMN DETAILS OF THE TEE PIERS AS SHOWN ON SHEET H40-57-14.

BATTER PILES IN EXTERIOR ROWS 1:4 IN THE DIRECTION SHOWN.

STEEL PILING USED AS POINT BEARING SHALL HAVE A MINIMUM DISTANCE OF APPROXIMATELY 10 FEET FROM BOTTOM OF FOOTING TO TOP OF BEARING ROCK. THE PILE LAYOUTS ARE SUCH THAT THE DISTANCE CENTER TO CENTER OF ADJACENT PILING SHALL NOT EXCEED 8'-0.

PIER PILES SHALL BE DRIVEN TO VALUES SHOWN IN DESIGN PLANS.

LATEST REVISION DATE

APPROVED BY BRIDGE ENGINEER

IOWA DOT Highway Division

STANDARD DESIGN - 40' ROADWAY, THREE SPAN BRIDGE

PRETENSIONED PRESTRESSED CONCRETE BEAM BRIDGES

SEPTEMBER, 2014

TEE PIER-HP10x57 SRL-2 STEEL PILE FOOTINGS

0° SKEW - H=25' TO 40'

H40-62-14

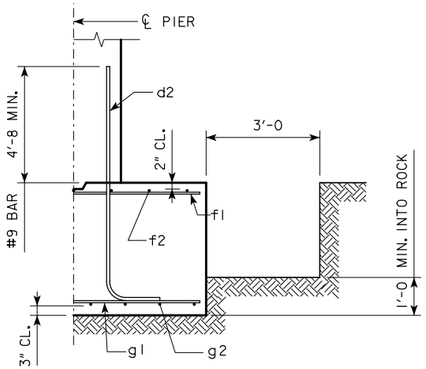

TYPICAL SECTION

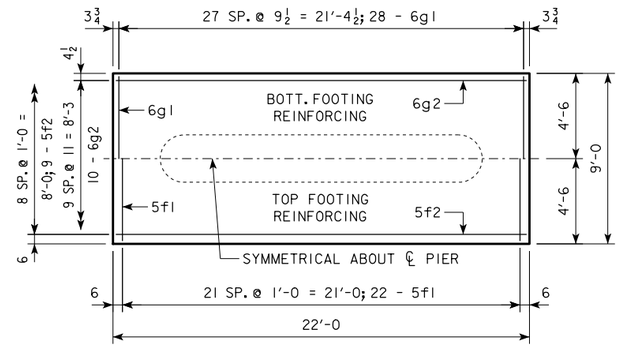

3'-6 x 9'-0 x 22'-0

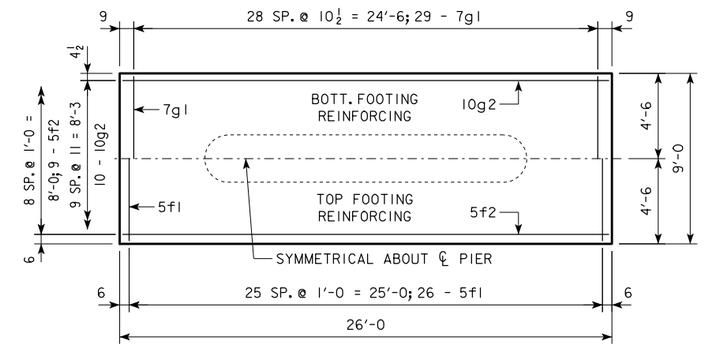

3'-6 x 9'-0 x 26'-0

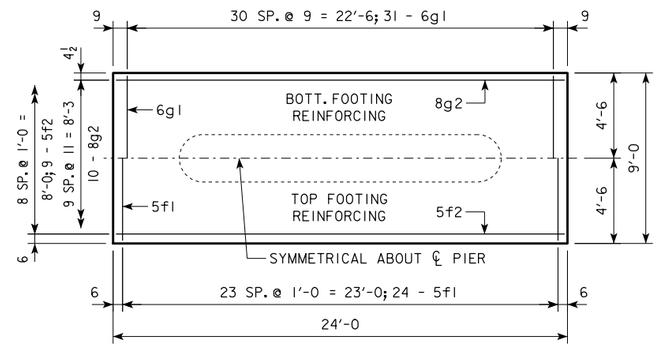

3'-6 x 9'-0 x 24'-0

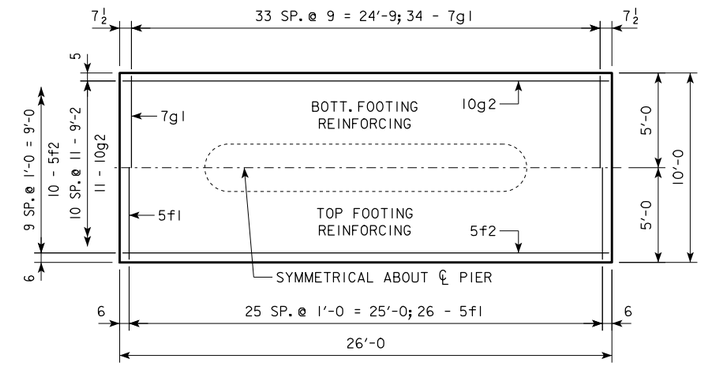

3'-6 x 10'-0 x 26'-0

H IN FT.	℄ - ℄ ABUT. BRG.	FOOTING SIZE
16 TO 18	138'-10 151'-4	3'-6 x 9' x 22'
	163'-10 176'-4 188'-10	3'-6 x 9' x 24'
	201'-4 213'-10	3'-6 x 9' x 26'
	226'-4 243'-0	3'-6 x 10' x 26'
19 TO 21	138'-10 151'-4	3'-6 x 9' x 22'
	163'-10 176'-4	3'-6 x 9' x 24'
	188'-10 201'-4	3'-6 x 9' x 26'
	213'-10 226'-4 243'-0	3'-6 x 10' x 26'
22 TO 24	138'-10	3'-6 x 9' x 22'
	151'-4 163'-10 176'-4	3'-6 x 9' x 24'
	188'-10 201'-4	3'-6 x 9' x 26'
	213'-10 226'-4 243'-0	3'-6 x 10' x 26'

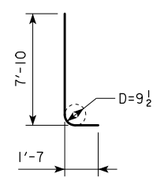

d2

NOTE: D = PIN DIAMETER.
DIMENSIONS ARE OUT TO OUT.

NOTE: THE REINFORCING STEEL QUANTITY IS TO BE INCLUDED ON THE SUMMARY QUANTITIES SHEET IN THE PLAN.

NOTE: THE CONCRETE QUANTITY IS TO BE INCLUDED ON THE SUMMARY QUANTITIES SHEET IN THE PLAN.

FOOTING SIZE	REINFORCING STEEL (ONE FOOTING)					STRUCTURAL CONCRETE (CY)
	BAR	NO., SIZE & SPACING	LENGTH	WEIGHT (LB.)	TOTAL WEIGHT (LB.)	
3'-6 x 9' x 22'	d2	44 - #9 AS SHOWN	9'-5	1409	2500	25.7
	f1	22 - #5 @ 1'-0	8'-8	199		
	f2	9 - #5 @ 1'-0	21'-8	203		
	g1	28 - #6 @ 0'-9½	8'-8	364		
	g2	10 - #6 @ 0'-11	21'-8	325		
3'-6 x 9' x 24'	d2	44 - #9 AS SHOWN	9'-5	1409	2884	28.0
	f1	24 - #5 @ 1'-0	8'-8	217		
	f2	9 - #5 @ 1'-0	23'-8	222		
	g1	31 - #6 @ 0'-9	8'-8	404		
	g2	10 - #8 @ 0'-11	23'-8	632		
3'-6 x 9' x 26'	d2	44 - #9 AS SHOWN	9'-5	1409	3503	30.3
	f1	26 - #5 @ 1'-0	8'-8	235		
	f2	9 - #5 @ 1'-0	25'-8	241		
	g1	29 - #7 @ 0'-10½	8'-8	514		
	g2	10 - #10 @ 0'-10	25'-8	1104		
3'-6 x 10' x 26'	d2	44 - #9 AS SHOWN	9'-5	1409	3826	33.7
	f1	26 - #5 @ 1'-0	9'-8	262		
	f2	10 - #5 @ 1'-0	25'-8	268		
	g1	34 - #7 @ 0'-9	9'-8	672		
	g2	11 - #10 @ 0'-11	25'-8	1215		

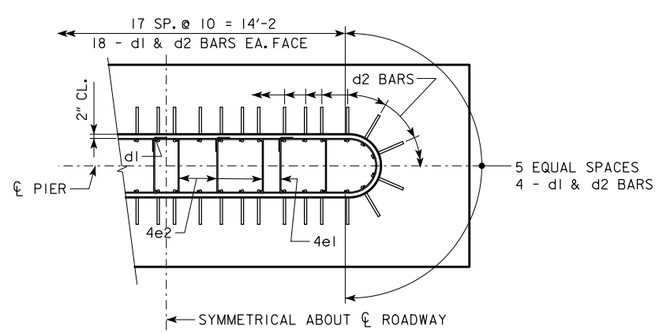

d2 BAR LAYOUT
(SEE SECTION A-A ON SHEET H40-57-14.)

FOOTING NOTES:

THESE SPREAD FOOTINGS ARE DESIGNED AND DETAILED TO BE USED WITH THE CAP AND COLUMN DETAILS OF THE TEE PIERS AS SHOWN ON SHEET H40-57-14.

THESE SPREAD FOOTINGS SHALL EXTEND AT LEAST 12 INCHES INTO SUITABLE FOUNDATION ROCK AND THE LAST 12 INCHES OF ROCK EXCAVATION SHALL BE TO NEAT LINES OF MASONRY. THE FOUNDATION ROCK SHALL HAVE A MINIMUM LRFD NOMINAL BEARING RESISTANCE OF 30 KIPS PER SQUARE FOOT (ALLOWABLE SERVICE LOAD BEARING VALUE OF AT LEAST 10 KIPS PER SQUARE FOOT).

LATEST REVISION DATE

APPROVED BY BRIDGE ENGINEER

IOWA DOT Highway Division

STANDARD DESIGN - 40' ROADWAY, THREE SPAN BRIDGE

PRETENSIONED PRESTRESSED CONCRETE BEAM BRIDGES

SEPTEMBER, 2014

TEE PIER - SPREAD FOOTINGS

0° SKEW - H=16' TO 24'

H40-63-14

H IN FT.	℄ - ℄ ABUT. BRG.	FOOTING SIZE
25 TO 27	138'-10	4' x 8' x 25'
	151'-4 163'-10	4' x 8' x 27'
	176'-4 188'-10 201'-4	4' x 9' x 27'
	213'-10 226'-4 243'-0	4' x 9' x 29'
28 TO 30	138'-10 151'-4 163'-10	4' x 8' x 27'
	176'-4 188'-10 201'-4	4' x 9' x 27'
	213'-10 226'-4	4' x 9' x 29'
	243'-0	4' x 10' x 29'
31 TO 33	138'-10 151'-4	4' x 8' x 27'
	163'-10 176'-4 188'-10	4' x 9' x 27'
	201'-4 213'-10 226'-4	4' x 9' x 29'
	243'-0	4' x 10' x 29'
34 TO 36	138'-10 151'-4	4' x 8' x 27'
	163'-10 176'-4 188'-10	4' x 9' x 27'
	201'-4 213'-10	4' x 9' x 29'
	226'-4 243'-0	4' x 10' x 29'
37 TO 40	138'-10 151'-4 163'-10 176'-4	4' x 9' x 27'
	188'-10 201'-4	4' x 9' x 29'
	213'-10 226'-4 243'-0	4' x 10' x 29'

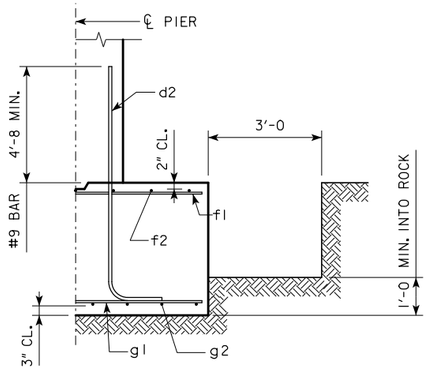

TYPICAL SECTION

NOTE: THE REINFORCING STEEL QUANTITY IS TO BE INCLUDED ON THE SUMMARY QUANTITIES SHEET IN THE PLAN.

NOTE: THE CONCRETE QUANTITY IS TO BE INCLUDED ON THE SUMMARY QUANTITIES SHEET IN THE PLAN.

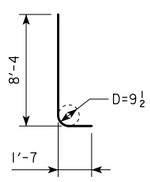

d2

NOTE: D = PIN DIAMETER.
DIMENSIONS ARE OUT TO OUT.

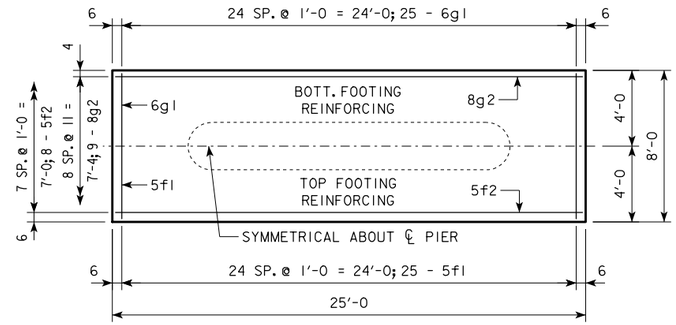

4'-0 x 8'-0 x 25'-0

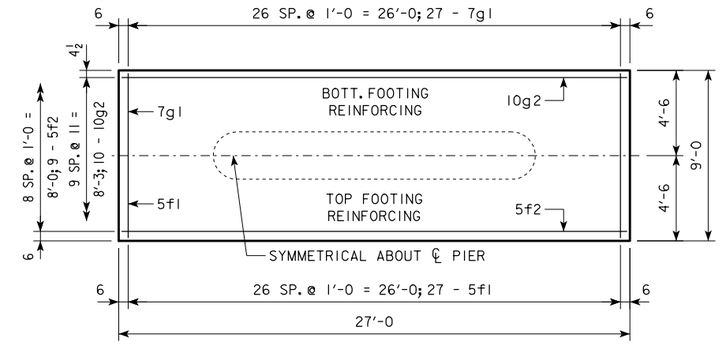

4'-0 x 9'-0 x 27'-0

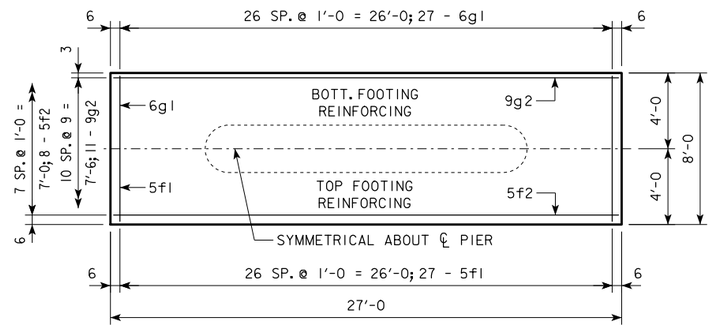

4'-0 x 8'-0 x 27'-0

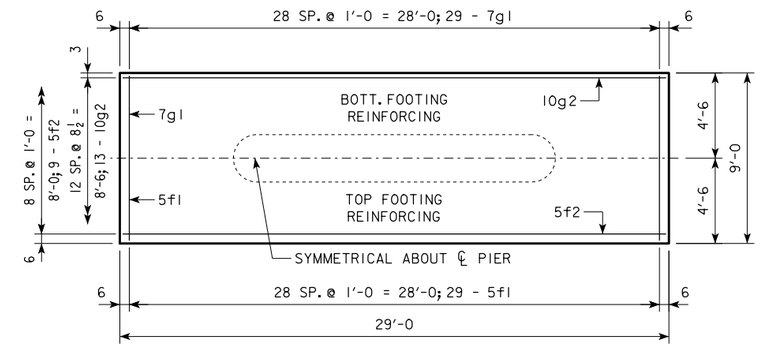

4'-0 x 9'-0 x 29'-0

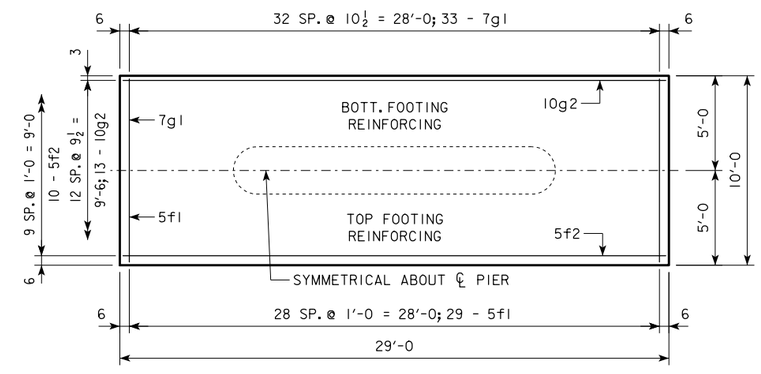

4'-0 x 10'-0 x 29'-0

FOOTING NOTES:

THESE SPREAD FOOTINGS ARE DESIGNED AND DETAILED TO BE USED WITH THE CAP AND COLUMN DETAILS OF THE TEE PIERS AS SHOWN ON SHEET H40-57-14.

THESE SPREAD FOOTINGS SHALL EXTEND AT LEAST 12 INCHES INTO SUITABLE FOUNDATION ROCK AND THE LAST 12 INCHES OF ROCK EXCAVATION SHALL BE TO NEAT LINES OF MASONRY. THE FOUNDATION ROCK SHALL HAVE A MINIMUM LRFD NOMINAL BEARING RESISTANCE OF 30 KIPS PER SQUARE FOOT (ALLOWABLE SERVICE LOAD BEARING VALUE OF AT LEAST 10 KIPS PER SQUARE FOOT).

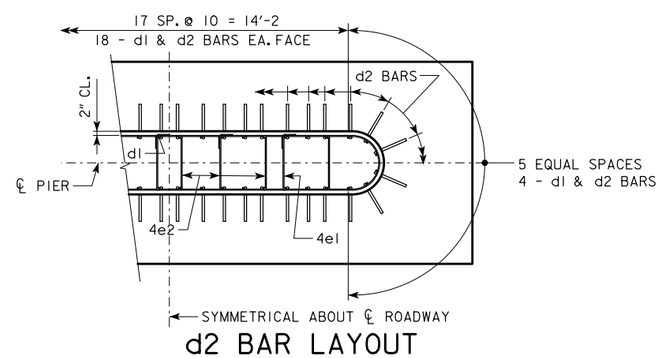

d2 BAR LAYOUT
(SEE SECTION A-A ON SHEET H40-57-14.)

FOOTING SIZE	REINFORCING STEEL (ONE FOOTING)					STRUCTURAL CONCRETE (CY)
	BAR	NO., SIZE & SPACING	LENGTH	WEIGHT (LB.)	TOTAL WEIGHT (LB.)	
4' x 8' x 25'	d2	44 - #9 AS SHOWN	9'-11	1484	2771	29.6
	f1	25 - #5 @ 1'-0	7'-8	200		
	f2	8 - #5 @ 1'-0	24'-8	206		
	g1	25 - #6 @ 1'-0	7'-8	288		
	g2	9 - #8 @ 0'-11	24'-8	593		
4' x 8' x 27'	d2	44 - #9 AS SHOWN	9'-11	1484	3231	32.0
	f1	27 - #5 @ 1'-0	7'-8	216		
	f2	8 - #5 @ 1'-0	26'-8	223		
	g1	27 - #6 @ 1'-0	7'-8	311		
	g2	11 - #9 @ 0'-9	26'-8	997		
4' x 9' x 27'	d2	44 - #9 AS SHOWN	9'-11	1484	3603	36.0
	f1	27 - #5 @ 1'-0	8'-8	244		
	f2	9 - #5 @ 1'-0	26'-8	250		
	g1	27 - #7 @ 1'-0	8'-8	478		
	g2	10 - #10 @ 0'-11	26'-8	1147		
4' x 9' x 29'	d2	44 - #9 AS SHOWN	9'-11	1484	4133	38.7
	f1	29 - #5 @ 1'-0	8'-8	262		
	f2	9 - #5 @ 1'-0	28'-8	269		
	g1	29 - #7 @ 1'-0	8'-8	514		
	g2	13 - #10 @ 0'-8½	28'-8	1604		
4' x 10' x 29'	d2	44 - #9 AS SHOWN	9'-11	1484	4331	43.0
	f1	29 - #5 @ 1'-0	9'-8	292		
	f2	10 - #5 @ 1'-0	28'-8	299		
	g1	33 - #7 @ 0'-10½	9'-8	652		
	g2	13 - #10 @ 0'-9½	28'-8	1604		

LATEST REVISION DATE

APPROVED BY BRIDGE ENGINEER

IOWA DOT Highway Division

STANDARD DESIGN - 40' ROADWAY, THREE SPAN BRIDGE

PRETENSIONED PRESTRESSED CONCRETE BEAM BRIDGES

SEPTEMBER, 2014

TEE PIER - SPREAD FOOTINGS

0° SKEW - H=25' TO 40'

H40-64-14

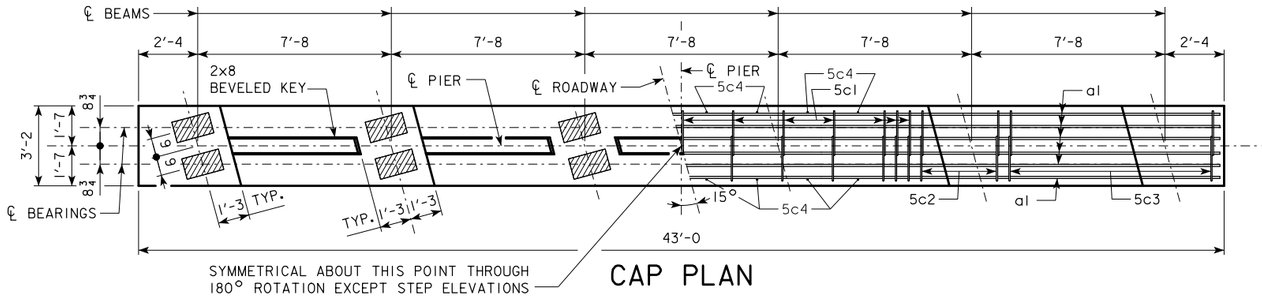

CAP PLAN

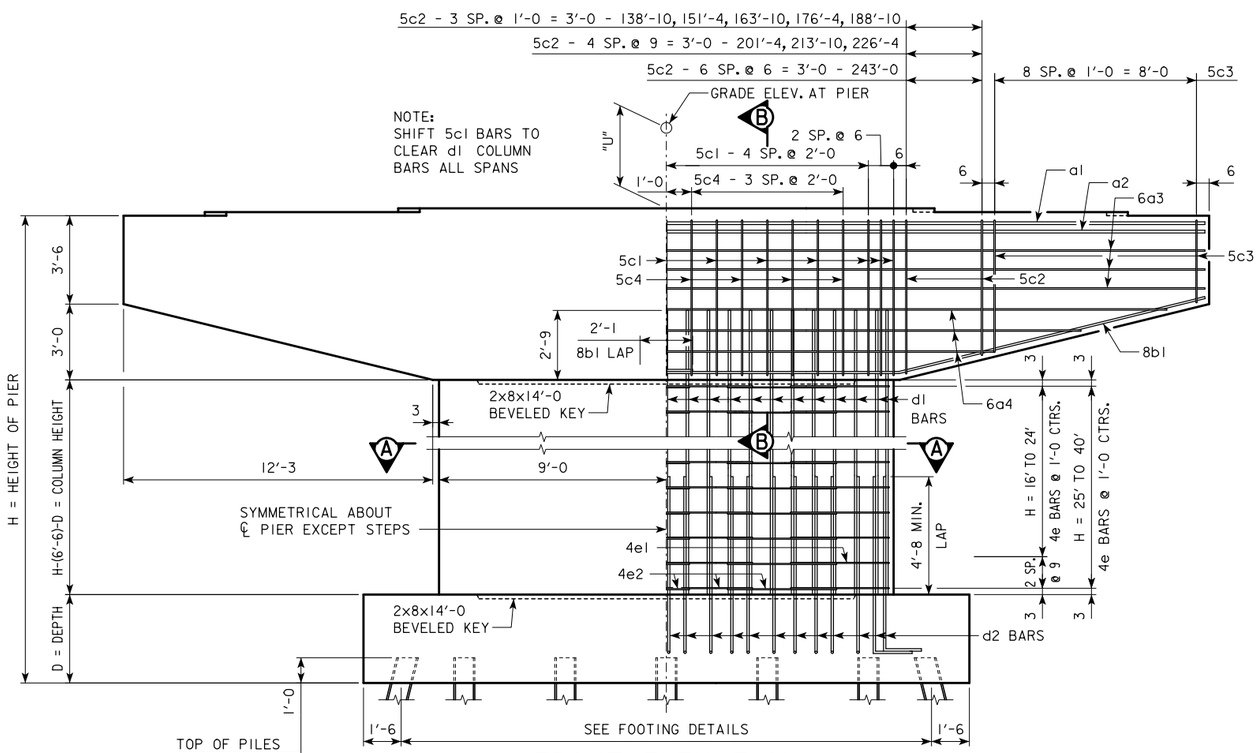

FRONT ELEVATION

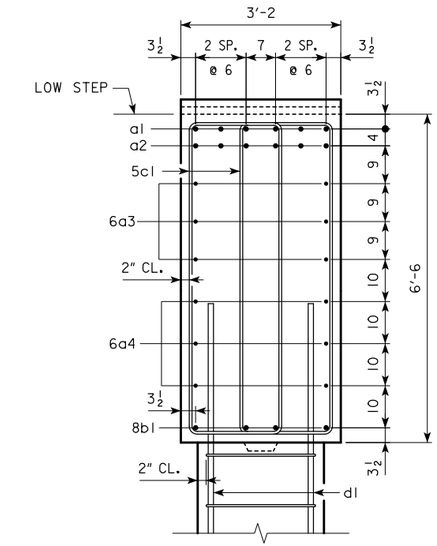

SECTION B-B

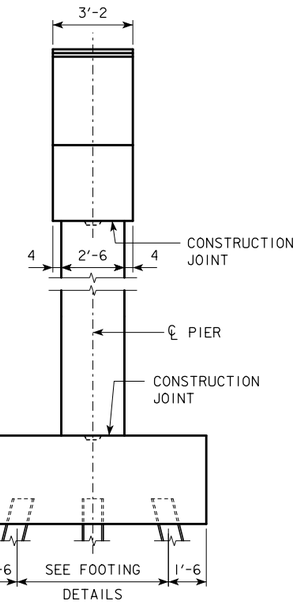

END ELEVATION

PIER NOTES:

SEE "TEE PIER NOTES" ON H40-02-14 FOR NOTES REGARDING APPLICATION OF THESE PIER STANDARDS.

MINIMUM CLEAR DISTANCE FROM FACE OF CONCRETE TO NEAR REINFORCING BAR SHALL BE 2 INCHES UNLESS OTHERWISE NOTED OR SHOWN.

ELIMINATE 2x8 BEVELED KEYWAY ON TOP OF CAP FOR EXPANSION PIERS.

FOR SIZE OF BEARING PADS, SEE H40-44-14.

SEE SHEET H40-15-14 FOR "U" DIMENSION.

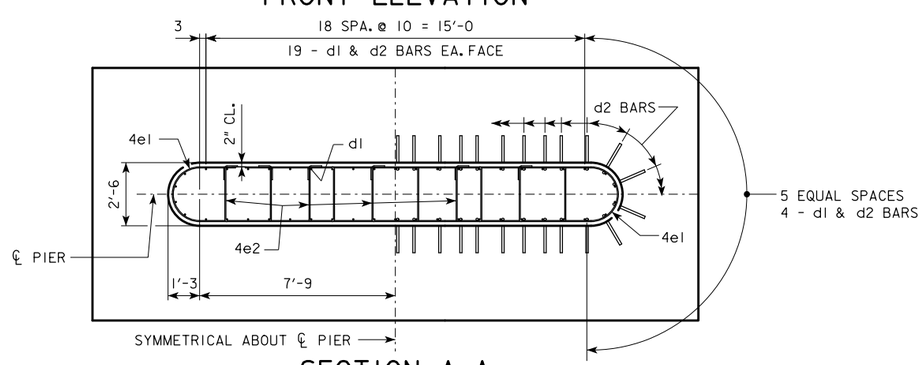

SECTION A-A

LATEST REVISION DATE

APPROVED BY BRIDGE ENGINEER

IOWA DOT Highway Division

STANDARD DESIGN - 40' ROADWAY, THREE SPAN BRIDGE

PRETENSIONED PRESTRESSED CONCRETE BEAM BRIDGES

SEPTEMBER, 2014

TEE PIER CAP AND COLUMN

15° SKEW

H40-65-14

BENT BAR DETAILS

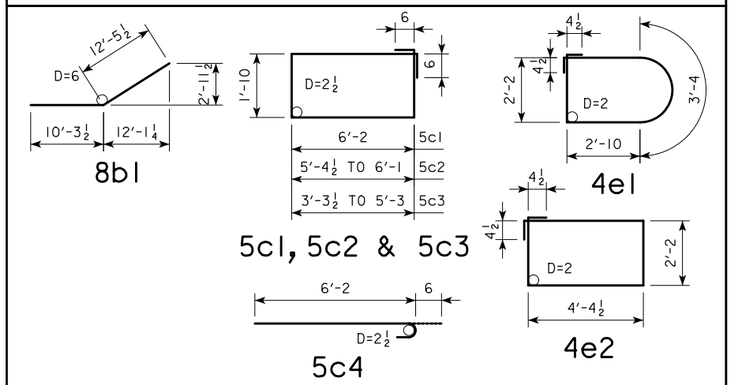

NOTE: ALL DIMENSIONS ARE OUT TO OUT.
D = PIN DIAMETER.

CAP

	℄ - ℄ ABUT. BEARINGS			138'-10			151'-4			163'-10			176'-4			188'-10			201'-4			213'-10			226'-4			243'-0		
	BAR	LENGTH	SHAPE	NO.	SIZE	WEIGHT	NO.	SIZE	WEIGHT	NO.	SIZE	WEIGHT	NO.	SIZE	WEIGHT	NO.	SIZE	WEIGHT	NO.	SIZE	WEIGHT	NO.	SIZE	WEIGHT	NO.	SIZE	WEIGHT	NO.	SIZE	WEIGHT
REINFORCING STEEL	a1	42'-8		6	9	870	6	9	870	6	10	1102	6	10	1102	6	10	1102	6	10	1102	6	11	1360	6	11	1360	6	11	1360
	a2	42'-8		6	9	870	6	9	870	6	9	870	6	9	870	6	9	870	6	10	1102	6	10	1102	6	10	1102	6	11	1360
	6a3	42'-8		6	6	385	6	6	385	6	6	385	6	6	385	6	6	385	6	6	385	6	6	385	6	6	385	6	6	385
	6a4	VARIES		6	6	298	6	6	298	6	6	298	6	6	298	6	6	298	6	6	298	6	6	298	6	6	298	6	6	298
	8b1	22'-9		8	8	486	8	8	486	8	8	486	8	8	486	8	8	486	8	8	486	8	8	486	8	8	486	8	8	486
	5c1	17'-0		26	5	461	26	5	461	26	5	461	26	5	461	26	5	461	26	5	461	26	5	461	26	5	461	26	5	461
	5c2	VARIES		16	5	269	16	5	269	16	5	269	16	5	269	16	5	269	20	5	336	20	5	336	20	5	336	28	5	471
	5c3	VARIES		36	5	496	36	5	496	36	5	496	36	5	496	36	5	496	36	5	496	36	5	496	36	5	496	36	5	496
	5c4	6'-8		16	5	111	16	5	111	16	5	111	16	5	111	16	5	111	16	5	111	16	5	111	16	5	111	16	5	111
①	TOTAL (LB.)			4246			4246			4478			4478			4478			4777			5035			5035			5428		
STRUCTURAL CONCRETE (CY)				29.5			29.5			29.5			29.5			29.5			29.5			29.5			29.5			29.5		

COLUMN

H IN FEET	COLUMN HEIGHT	STRUCTURAL CONCRETE (CY)	REINFORCING STEEL: d1 BAR				4e1 BAR				4e2 BAR				TOTAL WEIGHT (LB.)
			NO.	SIZE	LENGTH	WEIGHT	NO.	SIZE	LENGTH	WEIGHT	NO.	SIZE	LENGTH	WEIGHT	
16	6'-0	9.7	46	9	8'-9	1369	14	4	11'-11	111	28	4	13'-10	259	1739
17	7'-0	11.3	46	9	9'-9	1525	16	4	11'-11	127	32	4	13'-10	296	1948
18	8'-0	12.9	46	9	10'-9	1681	18	4	11'-11	143	36	4	13'-10	333	2157
19	9'-0	14.6	46	9	11'-9	1838	20	4	11'-11	159	40	4	13'-10	370	2367
20	10'-0	16.2	46	9	12'-9	1994	22	4	11'-11	175	44	4	13'-10	407	2576
21	11'-0	17.8	46	9	13'-9	2151	24	4	11'-11	191	48	4	13'-10	444	2786
22	12'-0	19.4	46	9	14'-9	2307	26	4	11'-11	207	52	4	13'-10	481	2995
23	13'-0	21.0	46	9	15'-9	2463	28	4	11'-11	223	56	4	13'-10	517	3203
24	14'-0	22.6	46	9	16'-9	2620	30	4	11'-11	239	60	4	13'-10	554	3413
25	14'-6	23.4	46	9	17'-3	2698	30	4	11'-11	239	60	4	13'-10	554	3491
26	15'-6	25.1	46	9	18'-3	2854	32	4	11'-11	255	64	4	13'-10	591	3700
27	16'-6	26.7	46	9	19'-3	3011	34	4	11'-11	271	68	4	13'-10	628	3910
28	17'-6	28.3	46	9	20'-3	3167	36	4	11'-11	287	72	4	13'-10	665	4119
29	18'-6	29.9	46	9	21'-3	3324	38	4	11'-11	302	76	4	13'-10	702	4328
30	19'-6	31.5	46	9	22'-3	3480	40	4	11'-11	318	80	4	13'-10	739	4537
31	20'-6	33.1	46	9	23'-3	3636	42	4	11'-11	334	84	4	13'-10	776	4746
32	21'-6	34.8	46	9	24'-3	3793	44	4	11'-11	350	88	4	13'-10	813	4956
33	22'-6	36.4	46	9	25'-3	3949	46	4	11'-11	366	92	4	13'-10	850	5165
34	23'-6	38.0	46	9	26'-3	4106	48	4	11'-11	382	96	4	13'-10	887	5375
35	24'-6	39.6	46	9	27'-3	4262	50	4	11'-11	398	100	4	13'-10	924	5584
36	25'-6	41.2	46	9	28'-3	4418	52	4	11'-11	414	104	4	13'-10	961	5793
37	26'-6	42.9	46	9	29'-3	4575	54	4	11'-11	430	108	4	13'-10	998	6003
38	27'-6	44.5	46	9	30'-3	4731	56	4	11'-11	446	112	4	13'-10	1035	6212
39	28'-6	46.1	46	9	31'-3	4888	58	4	11'-11	462	116	4	13'-10	1072	6422
40	29'-6	47.7	46	9	32'-3	5044	60	4	11'-11	478	120	4	13'-10	1109	6631

① SEE SHEET H40-17-14 FOR STEP REINFORCING STEEL QUANTITIES AND DETAILS.

NOTE: THE REINFORCING STEEL QUANTITIES FOR THE CAP AND COLUMN ARE TO BE INCLUDED ON THE SUMMARY QUANTITIES SHEET IN THE PLAN.

NOTE: THE CONCRETE QUANTITIES FOR THE CAP AND COLUMN COLUMN ARE TO BE INCLUDED ON THE SUMMARY QUANTITIES SHEET IN THE PLAN.

LATEST REVISION DATE

APPROVED BY BRIDGE ENGINEER

IOWA DOT Highway Division

STANDARD DESIGN - 40' ROADWAY, THREE SPAN BRIDGE

PRETENSIONED PRESTRESSED CONCRETE BEAM BRIDGES

SEPTEMBER, 2014

TEE PIER CAP AND COLUMN

15° SKEW

H40-66-14

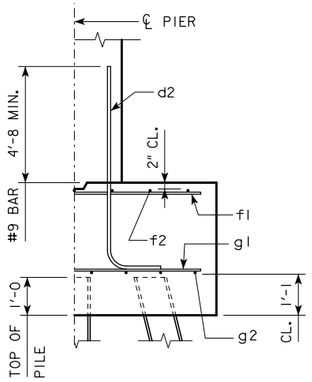

TYPICAL SECTION

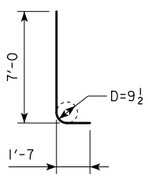

d2

NOTE: D = PIN DIAMETER.
DIMENSIONS ARE OUT TO OUT.

NOTE: THE REINFORCING STEEL QUANTITY IS TO BE INCLUDED ON THE SUMMARY QUANTITIES SHEET IN THE PLAN.

NOTE: THE CONCRETE QUANTITY IS TO BE INCLUDED ON THE SUMMARY QUANTITIES SHEET IN THE PLAN.

NOTE: THE PILE TYPE IS TO BE INCLUDED ON THE SUMMARY QUANTITIES SHEET IN THE PLAN.

H IN FT.	℄ - ℄ ABUT. BRG.	PILING (HP10x57) NO. & LAYOUT	PILING (HP10x57) (1) LRFD PU, STRENGTH I DES. LOAD (KIPS)	FOOTING SIZE
16 TO 18	201'-4	19A	146	3'-6 x 10' x 25'
	213'-10	20A	142	
	226'-4	21A	144	
	243'-0	22A	145	
19 TO 21	201'-4	20A	140	3'-6 x 10' x 25'
	213'-10	20A	145	
	226'-4	22A	142	
	243'-0	23A	143	
22 TO 24	201'-4	20A	143	3'-6 x 10' x 25'
	213'-10	21A	144	
	226'-4	22A	144	
	243'-0	23A	146	

FOOTING SIZE	REINFORCING STEEL (ONE FOOTING) BAR	NO., SIZE & SPACING	LENGTH	WEIGHT (LB.)	TOTAL WEIGHT (LB.)	STRUCTURAL CONCRETE (CY)
3'-6 x 10' x 25'	d2	46 - #9 AS SHOWN	8'-7	1342	3661	32.4
	f1	25 - #5 @ 1'-0	9'-8	252		
	f2	10 - #5 @ 1'-0	24'-8	257		
	g1	27 - #9 @ 0'-11	9'-8	887		
	g2	11 - #9 @ 0'-11	24'-8	923		

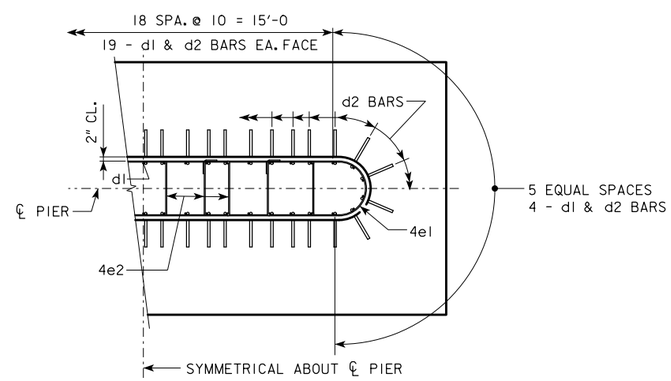

d2 BAR LAYOUT
(SEE SECTION A-A ON SHEET H40-65-14.)

(1) NOTE: PU, STRENGTH I DESIGN LOAD (KIPS) IS NOT THE VALUE USED IN THE FIELD FOR DRIVING PILES.

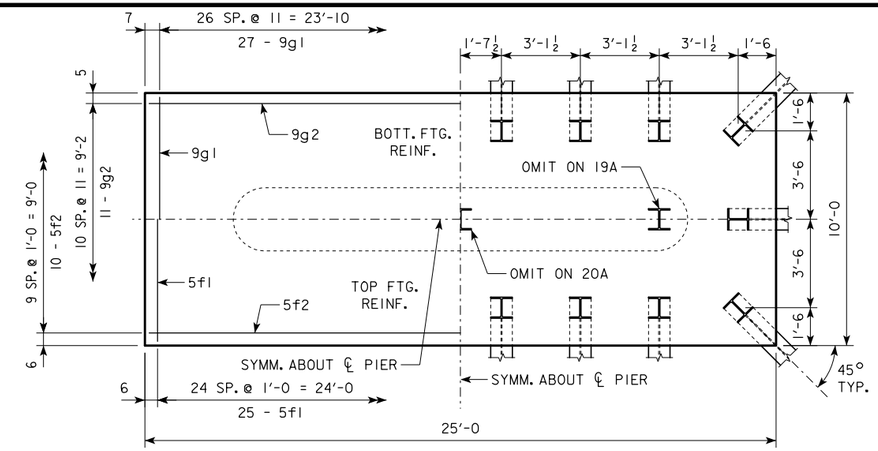

3'-6 x 10'-0 x 25'-0 FOR 19A, 20A & 21A

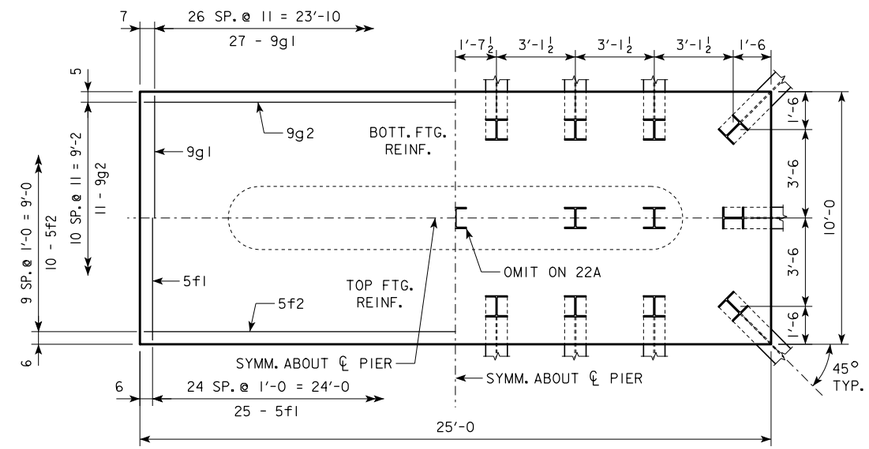

3'-6 x 10'-0 x 25'-0 FOR 22A & 23A

FOOTING NOTES:

THESE FOOTINGS ARE DESIGNED AND DETAILED TO BE USED WITH THE CAP AND COLUMN DETAILS OF THE TEE PIERS AS SHOWN ON SHEET H40-65-14.

BATTER PILES IN EXTERIOR ROWS 1:4 IN THE DIRECTION SHOWN.

STEEL PILING USED AS POINT BEARING SHALL HAVE A MINIMUM DISTANCE OF APPROXIMATELY 10 FEET FROM BOTTOM OF FOOTING TO TOP OF BEARING ROCK. THE PILE LAYOUTS ARE SUCH THAT THE DISTANCE CENTER TO CENTER OF ADJACENT PILING SHALL NOT EXCEED 8'-0.

PIER PILES SHALL BE DRIVEN TO VALUES SHOWN IN DESIGN PLANS.

LATEST REVISION DATE

APPROVED BY BRIDGE ENGINEER

IOWA DOT Highway Division

STANDARD DESIGN - 40' ROADWAY, THREE SPAN BRIDGE

PRETENSIONED PRESTRESSED CONCRETE BEAM BRIDGES

SEPTEMBER, 2014

TEE PIER-HP10x57 SRL-I STEEL PILE FOOTINGS

15° SKEW - H=16' TO 24'

H40-67-14

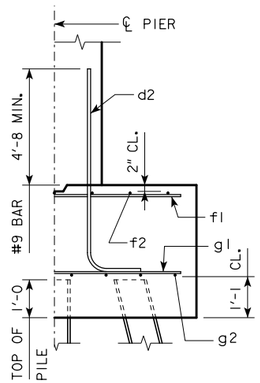

TYPICAL SECTION

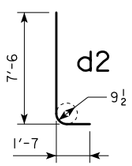

NOTE: D = PIN DIAMETER.
DIMENSIONS ARE OUT TO OUT.

H IN FT.	℄ - ℄ ABUT. BRG.	PILING (HP10x57) NO. & LAYOUT	PILING (HP10x57) ① LRFD PU, STRENGTH I DES. LOAD (KIPS)	FOOTING SIZE
25 TO 27	201'-4	20B	145	4' x 10' x 25'
	213'-10	21B	146	
	226'-4	22B	147	
	243'-0	24A	144	
28 TO 30	201'-4	21C	142	4' x 10' x 26'
	213'-10	21C	147	
	226'-4	22C	144	
	243'-0	24B	140	
31 TO 33	201'-4	21C	144	4' x 10' x 26'
	213'-10	22C	140	
	226'-4	22C	146	
	243'-0	24B	142	
34 TO 36	201'-4	21C	146	4' x 10' x 26'
	213'-10	22C	142	
	226'-4	23B	144	
	243'-0	24B	144	
37 TO 40	201'-4	22C	140	4' x 10' x 26'
	213'-10	22C	145	
	226'-4	23B	147	
	243'-0	24B	146	

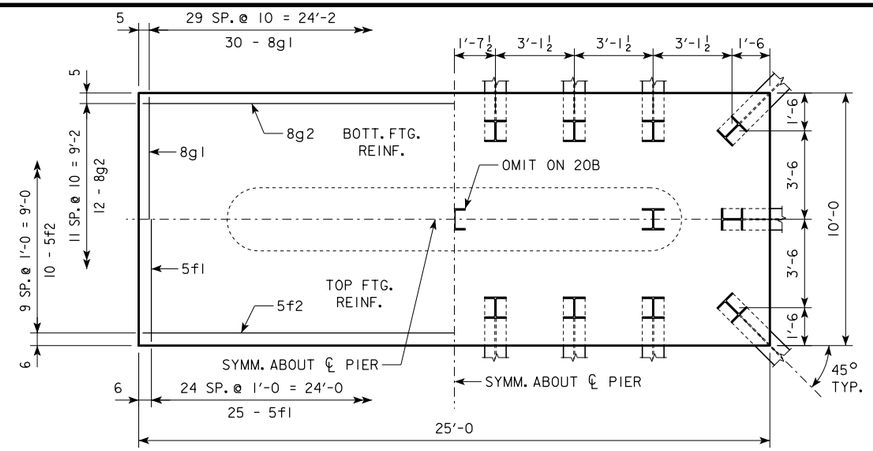

4'-0 x 10'-0 x 25'-0 FOR 20B & 21B

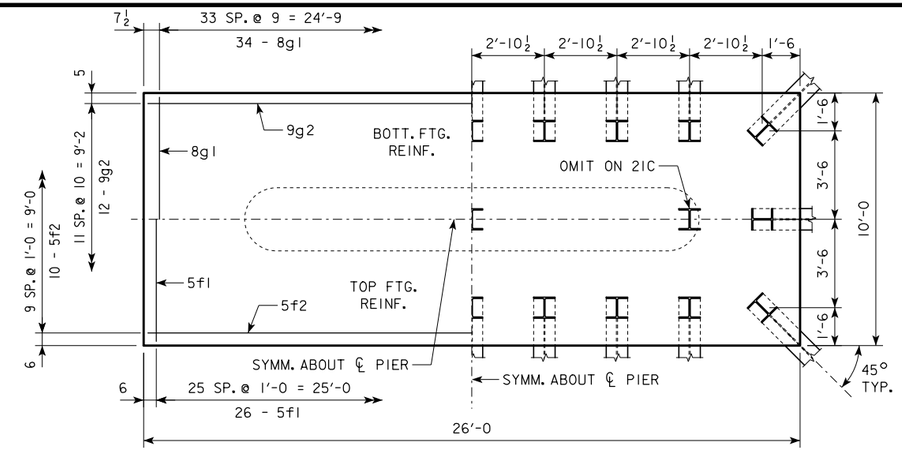

4'-0 x 10'-0 x 26'-0 FOR 21C & 23B

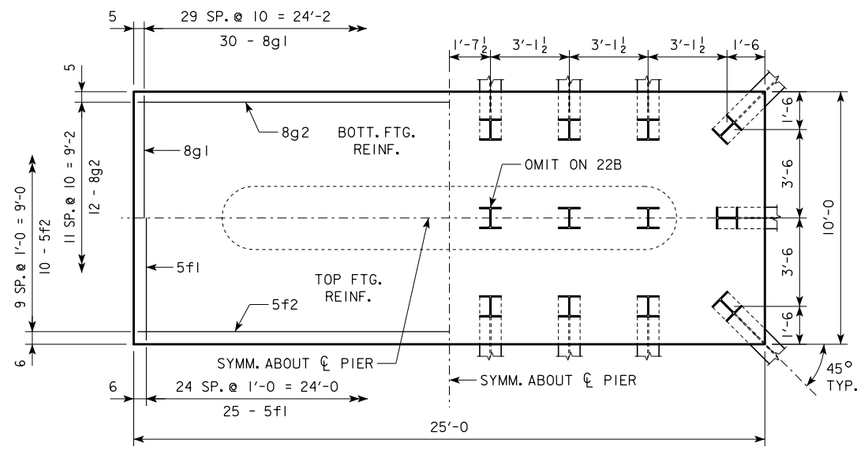

4'-0 x 10'-0 x 25'-0 FOR 22B & 24A

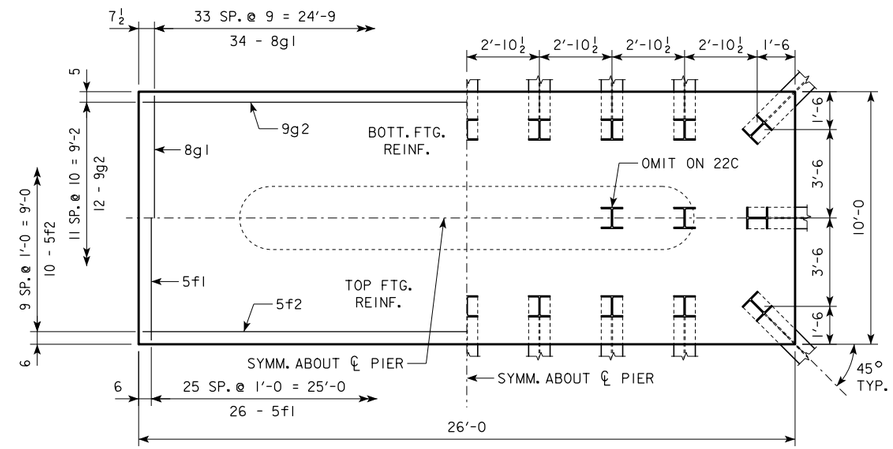

4'-0 x 10'-0 x 26'-0 FOR 22C & 24B

NOTE: THE REINFORCING STEEL QUANTITY IS TO BE INCLUDED ON THE SUMMARY QUANTITIES SHEET IN THE PLAN.

NOTE: THE CONCRETE QUANTITY IS TO BE INCLUDED ON THE SUMMARY QUANTITIES SHEET IN THE PLAN.

NOTE: THE PILE TYPE IS TO BE INCLUDED ON THE SUMMARY QUANTITIES SHEET IN THE PLAN.

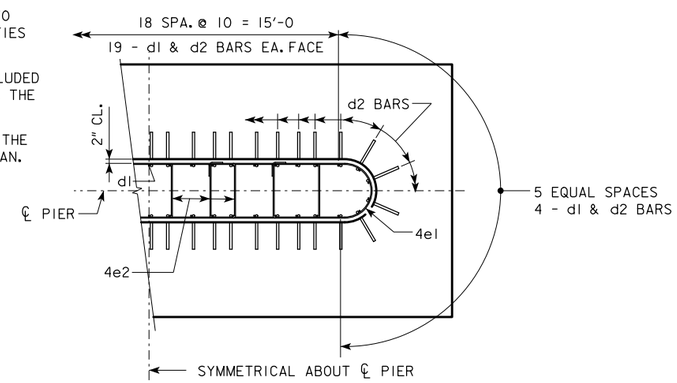

d2 BAR LAYOUT
(SEE SECTION A-A ON SHEET H40-65-14.)

FOOTING SIZE	BAR	REINFORCING STEEL (ONE FOOTING) NO., SIZE & SPACING	LENGTH	WEIGHT (LB.)	TOTAL WEIGHT (LB.)	STRUCTURAL CONCRETE (CY)
4' x 10' x 25'	d2	46 - #9 AS SHOWN	9'-1	1421	3494	37.0
	f1	25 - #5 @ 1'-0	9'-8	252		
	f2	10 - #5 @ 1'-0	24'-8	257		
	g1	30 - #8 @ 0'-10	9'-8	774		
	g2	12 - #8 @ 0'-10	24'-8	790		
4' x 10' x 26'	d2	46 - #9 AS SHOWN	9'-1	1421	3876	38.5
	f1	26 - #5 @ 1'-0	9'-8	262		
	f2	10 - #5 @ 1'-0	25'-8	268		
	g1	34 - #8 @ 0'-9	9'-8	878		
	g2	12 - #9 @ 0'-10	25'-8	1047		

① NOTE: PU, STRENGTH I DESIGN LOAD (KIPS) IS NOT THE VALUE USED IN THE FIELD FOR DRIVING PILES.

FOOTING NOTES:

THESE FOOTINGS ARE DESIGNED AND DETAILED TO BE USED WITH THE CAP AND COLUMN DETAILS OF THE TEE PIERS AS SHOWN ON SHEET H40-65-14.

BATTER PILES IN EXTERIOR ROWS 1:4 IN THE DIRECTION SHOWN.

STEEL PILING USED AS POINT BEARING SHALL HAVE A MINIMUM DISTANCE OF APPROXIMATELY 10 FEET FROM BOTTOM OF FOOTING TO TOP OF BEARING ROCK. THE PILE LAYOUTS ARE SUCH THAT THE DISTANCE CENTER TO CENTER OF ADJACENT PILING SHALL NOT EXCEED 8'-0.

PIER PILES SHALL BE DRIVEN TO VALUES SHOWN IN DESIGN PLANS.

LATEST REVISION DATE

APPROVED BY BRIDGE ENGINEER

IOWA DOT Highway Division

STANDARD DESIGN - 40' ROADWAY, THREE SPAN BRIDGE

PRETENSIONED PRESTRESSED CONCRETE BEAM BRIDGES

SEPTEMBER, 2014

TEE PIER-HP10x57 SRL-I STEEL PILE FOOTINGS

15° SKEW - H=25' TO 40'

H40-68-14

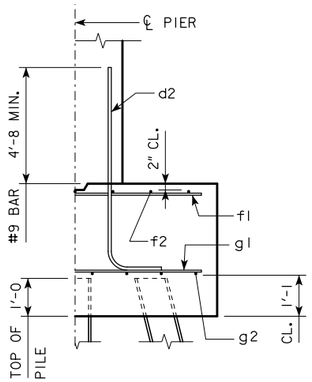

TYPICAL SECTION

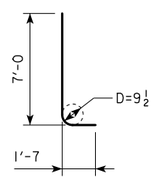

d2

NOTE: D = PIN DIAMETER.
DIMENSIONS ARE OUT TO OUT.

NOTE: THE REINFORCING STEEL QUANTITY IS TO BE INCLUDED ON THE SUMMARY QUANTITIES SHEET IN THE PLAN.

NOTE: THE CONCRETE QUANTITY IS TO BE INCLUDED ON THE SUMMARY QUANTITIES SHEET IN THE PLAN.

NOTE: THE PILE TYPE IS TO BE INCLUDED ON THE SUMMARY QUANTITIES SHEET IN THE PLAN.

H IN FT.	℄ - ℄ ABUT. BRG.	PILING (HP10x57) NO. & LAYOUT	(1) LRFD PU, STRENGTH I DES. LOAD (KIPS)	FOOTING SIZE
16 TO 18	201'-4	14A	205	3'-6 x 8' x 22'
	213'-10	14A	212	
	226'-4	15A	213	
	243'-0	16A	203	
19 TO 21	201'-4	14A	209	3'-6 x 8' x 22'
	213'-10	14A	217	
	226'-4	15A	218	
	243'-0	16A	207	
22 TO 24	201'-4	14A	214	3'-6 x 8' x 22'
	213'-10	15A	213	
	226'-4	16A	203	
	243'-0	16A	211	

FOOTING SIZE	REINFORCING STEEL (ONE FOOTING) BAR	NO., SIZE & SPACING	LENGTH	WEIGHT (LB.)	TOTAL WEIGHT (LB.)	STRUCTURAL CONCRETE (CY)
3'-6 x 8' x 22'	d2	46 - #9 AS SHOWN	8'-7	1342	2684	22.8
	f1	22 - #5 @ 1'-0	7'-8	176		
	f2	8 - #5 @ 1'-0	21'-8	181		
	g1	29 - #7 @ 0'-9	7'-8	454		
	g2	12 - #7 @ 0'-8	21'-8	531		

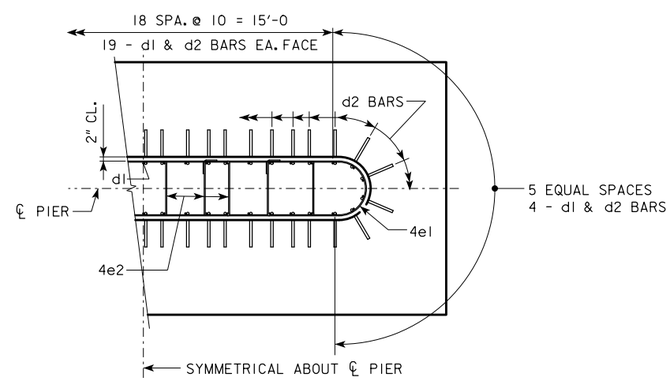

d2 BAR LAYOUT
(SEE SECTION A-A ON SHEET H40-65-14.)

(1) NOTE: PU, STRENGTH I DESIGN LOAD (KIPS) IS NOT THE VALUE USED IN THE FIELD FOR DRIVING PILES.

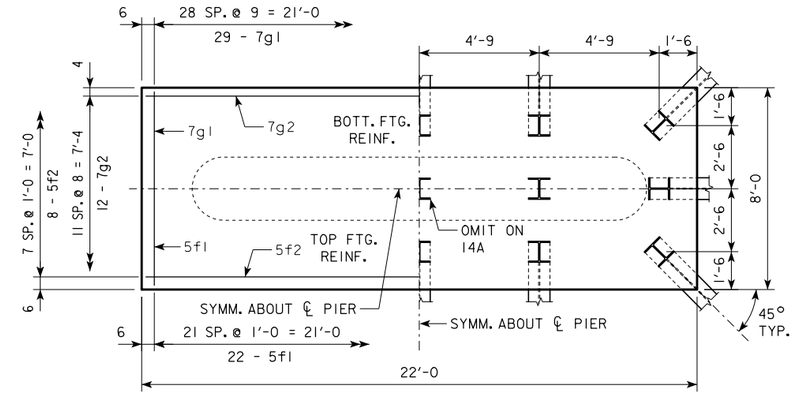

3'-6 x 8'-0 x 22'-0 FOR 14A & 15A

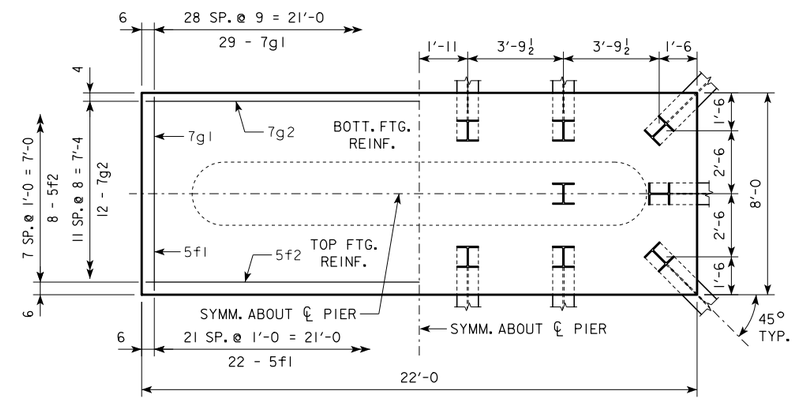

3'-6 x 8'-0 x 22'-0 FOR 16A

FOOTING NOTES:

THESE FOOTINGS ARE DESIGNED AND DETAILED TO BE USED WITH THE CAP AND COLUMN DETAILS OF THE TEE PIERS AS SHOWN ON SHEET H40-65-14.

BATTER PILES IN EXTERIOR ROWS 1:4 IN THE DIRECTION SHOWN.

STEEL PILING USED AS POINT BEARING SHALL HAVE A MINIMUM DISTANCE OF APPROXIMATELY 10 FEET FROM BOTTOM OF FOOTING TO TOP OF BEARING ROCK. THE PILE LAYOUTS ARE SUCH THAT THE DISTANCE CENTER TO CENTER OF ADJACENT PILING SHALL NOT EXCEED 8'-0.

PIER PILES SHALL BE DRIVEN TO VALUES SHOWN IN DESIGN PLANS.

LATEST REVISION DATE

APPROVED BY BRIDGE ENGINEER

IOWA DOT Highway Division

STANDARD DESIGN - 40' ROADWAY, THREE SPAN BRIDGE

PRETENSIONED PRESTRESSED CONCRETE BEAM BRIDGES

SEPTEMBER, 2014

TEE PIER-HP10x57 SRL-2 STEEL PILE FOOTINGS

15° SKEW - H=16' TO 24'

H40-69-14

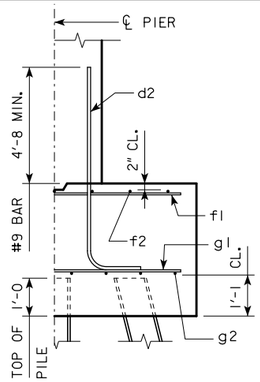

TYPICAL SECTION

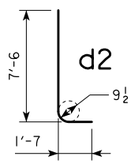

NOTE: D = PIN DIAMETER.
DIMENSIONS ARE OUT TO OUT.

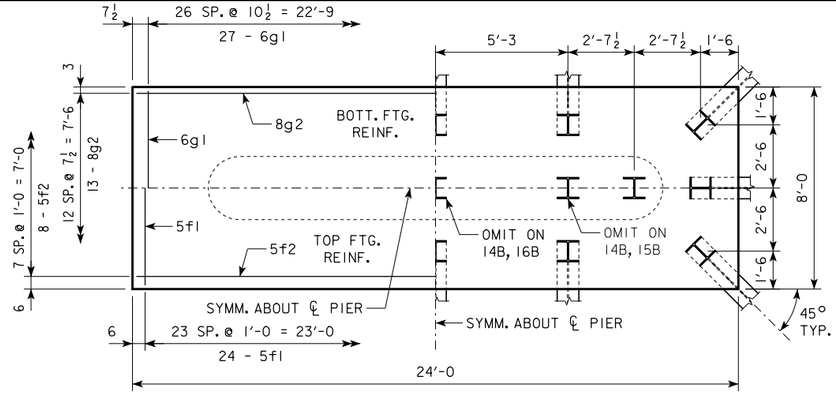

4'-0 x 8'-0 x 24'-0 FOR 14B, 15B & 16B

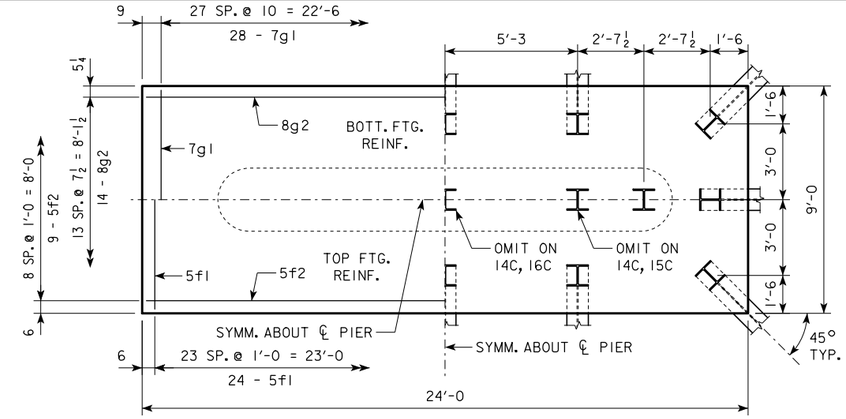

4'-0 x 9'-0 x 24'-0 FOR 14C, 15C & 16C

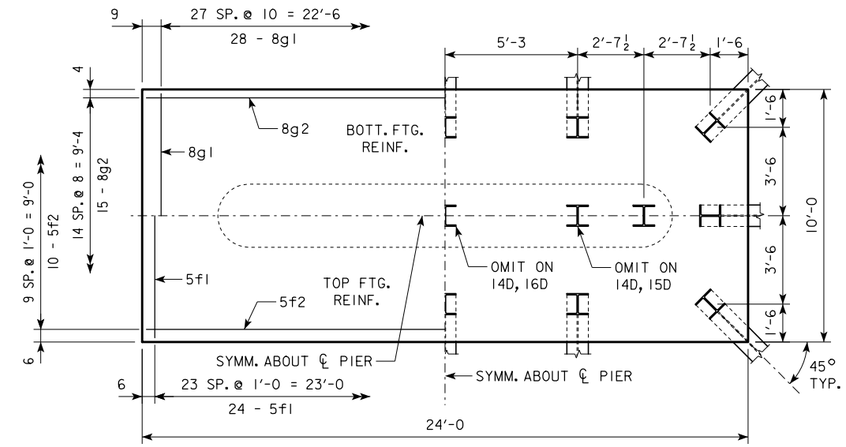

4'-0 x 10'-0 x 24'-0 FOR 14D, 15D & 16D

H IN FT.	℄ - ℄ ABUT. BRG.	PILING (HP10x57) NO. & LAYOUT	(1) LRFD PU, STRENGTH I DES. LOAD (KIPS)	FOOTING SIZE
25 TO 27	201'-4	14B	209	4' x 8' x 24'
	213'-10	14B	217	
	226'-4	15B	217	
	243'-0	16B	213	
28 TO 30	201'-4	14B	213	4' x 8' x 24'
	213'-10	15B	212	
	226'-4	16B	209	
	243'-0	16B	216	
31 TO 33	201'-4	14C	213	4' x 9' x 24'
	213'-10	15C	211	
	226'-4	16C	208	
	243'-0	16C	215	
34 TO 36	201'-4	14D	213	4' x 10' x 24'
	213'-10	15D	211	
	226'-4	16D	208	
	243'-0	16D	215	
37 TO 40	201'-4	14D	217	4' x 10' x 24'
	213'-10	15D	215	
	226'-4	16D	212	
	243'-0	16D	219	

NOTE: THE REINFORCING STEEL QUANTITY IS TO BE INCLUDED ON THE SUMMARY QUANTITIES SHEET IN THE PLAN.

NOTE: THE CONCRETE QUANTITY IS TO BE INCLUDED ON THE SUMMARY QUANTITIES SHEET IN THE PLAN.

NOTE: THE PILE TYPE IS TO BE INCLUDED ON THE SUMMARY QUANTITIES SHEET IN THE PLAN.

FOOTING SIZE	REINFORCING STEEL (ONE FOOTING) BAR	NO., SIZE & SPACING	LENGTH	WEIGHT (LB.)	TOTAL WEIGHT (LB.)	STRUCTURAL CONCRETE (CY)
4' x 8' x 24'	d2	46 - #9 AS SHOWN	9'-1	1421	2942	28.4
	f1	24 - #5 @ 1'-0	7'-8	192		
	f2	8 - #5 @ 1'-0	23'-8	197		
	g1	27 - #6 @ 0'-10½	7'-8	311		
	g2	13 - #8 @ 0'-7½	23'-8	821		
4' x 9' x 24'	d2	46 - #9 AS SHOWN	9'-1	1421	3241	32.0
	f1	24 - #5 @ 1'-0	8'-8	217		
	f2	9 - #5 @ 1'-0	23'-8	222		
	g1	28 - #7 @ 0'-10	8'-8	496		
	g2	14 - #8 @ 0'-7½	23'-8	885		
4' x 10' x 24'	d2	46 - #9 AS SHOWN	9'-1	1421	3581	35.6
	f1	24 - #5 @ 1'-0	9'-8	242		
	f2	10 - #5 @ 1'-0	23'-8	247		
	g1	28 - #8 @ 0'-10	9'-8	723		
	g2	15 - #8 @ 0'-8	23'-8	948		

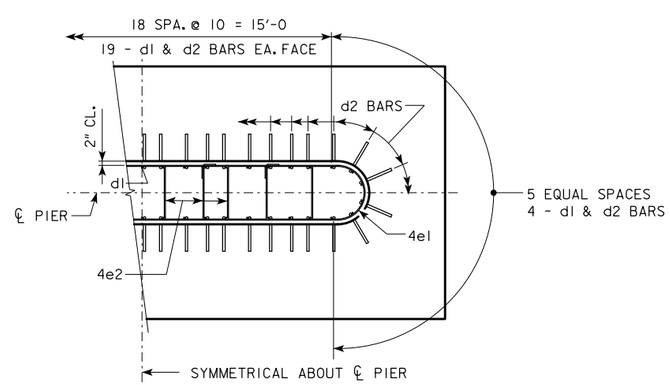

d2 BAR LAYOUT
(SEE SECTION A-A ON SHEET H40-65-14.)

(1) NOTE: PU, STRENGTH I DESIGN LOAD (KIPS) IS NOT THE VALUE USED IN THE FIELD FOR DRIVING PILES.

FOOTING NOTES:

THESE FOOTINGS ARE DESIGNED AND DETAILED TO BE USED WITH THE CAP AND COLUMN DETAILS OF THE TEE PIERS AS SHOWN ON SHEET H40-65-14.

BATTER PILES IN EXTERIOR ROWS 1:4 IN THE DIRECTION SHOWN.

STEEL PILING USED AS POINT BEARING SHALL HAVE A MINIMUM DISTANCE OF APPROXIMATELY 10 FEET FROM BOTTOM OF FOOTING TO TOP OF BEARING ROCK. THE PILE LAYOUTS ARE SUCH THAT THE DISTANCE CENTER TO CENTER OF ADJACENT PILING SHALL NOT EXCEED 8'-0.

PIER PILES SHALL BE DRIVEN TO VALUES SHOWN IN DESIGN PLANS.

LATEST REVISION DATE

APPROVED BY BRIDGE ENGINEER

IOWA DOT Highway Division

STANDARD DESIGN - 40' ROADWAY, THREE SPAN BRIDGE

PRETENSIONED PRESTRESSED CONCRETE BEAM BRIDGES

SEPTEMBER, 2014

TEE PIER-HP10x57 SRL-2 STEEL PILE FOOTINGS

15° SKEW - H=25' TO 40'

H40-70-14

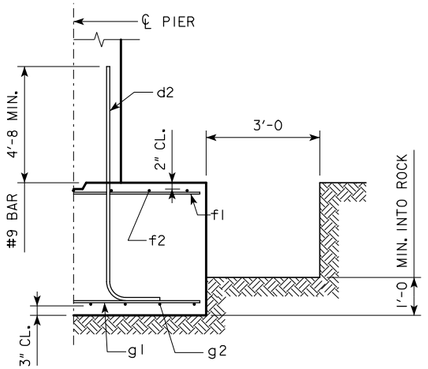

TYPICAL SECTION

H IN FT.	℄ - ℄ ABUT. BRG.	FOOTING SIZE
16 TO 18	138'-10 151'-4	3'-6 x 8' x 25'
	163'-10 176'-4 188'-10	3'-6 x 9' x 25'
	201'-4 213'-10	3'-6 x 9' x 27'
	226'-4 243'-0	3'-6 x 10' x 27'
19 TO 21	138'-10	3'-6 x 8' x 25'
	151'-4 163'-10 176'-4 188'-10	3'-6 x 9' x 25'
	201'-4	3'-6 x 9' x 27'
	213'-10 226'-4 243'-0	3'-6 x 10' x 27'
22 TO 24	138'-10	3'-6 x 8' x 25'
	151'-4 163'-10 176'-4	3'-6 x 9' x 25'
	188'-10 201'-4	3'-6 x 9' x 27'
	213'-10 226'-4 243'-0	3'-6 x 10' x 27'

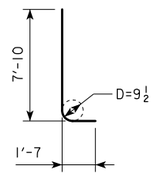

d2

NOTE: D = PIN DIAMETER.
DIMENSIONS ARE OUT TO OUT.

NOTE: THE REINFORCING STEEL QUANTITY IS TO BE INCLUDED ON THE SUMMARY QUANTITIES SHEET IN THE PLAN.

NOTE: THE CONCRETE QUANTITY IS TO BE INCLUDED ON THE SUMMARY QUANTITIES SHEET IN THE PLAN.

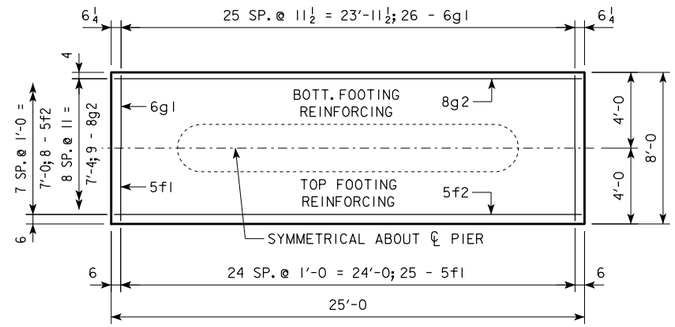

3'-6 x 8'-0 x 25'-0

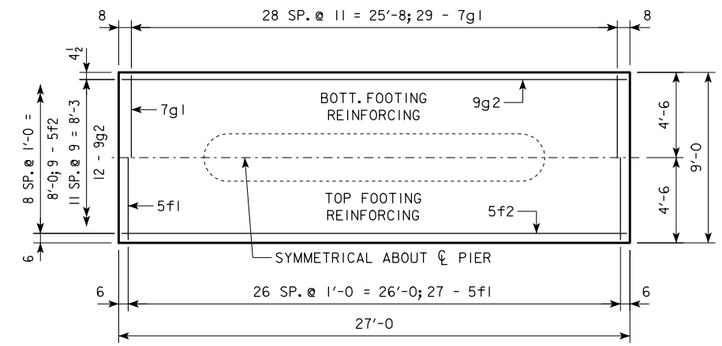

3'-6 x 9'-0 x 27'-0

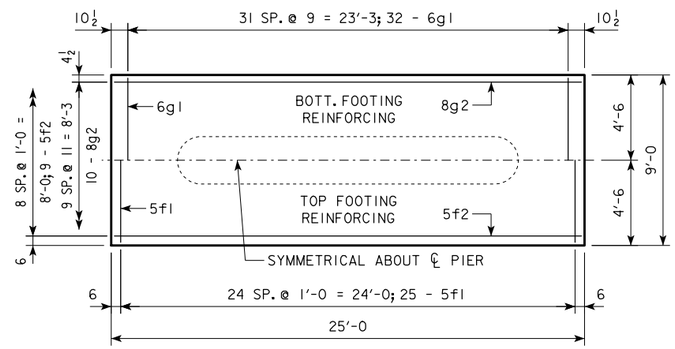

3'-6 x 9'-0 x 25'-0

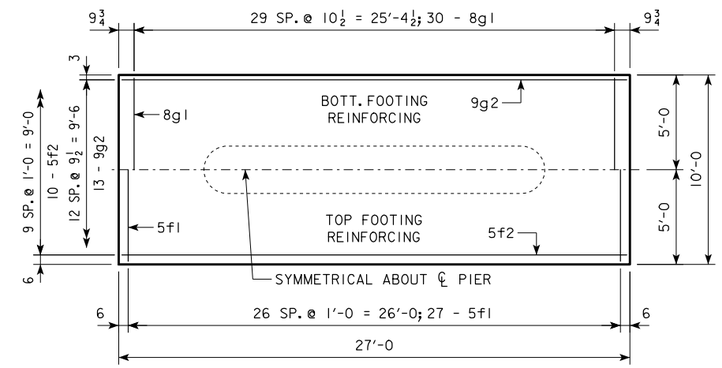

3'-6 x 10'-0 x 27'-0

FOOTING SIZE	REINFORCING STEEL (ONE FOOTING)					STRUCTURAL CONCRETE (CY)
	BAR	NO., SIZE & SPACING	LENGTH	WEIGHT (LB.)	TOTAL WEIGHT (LB.)	
3'-6 x 8' x 25'	d2	46 - #9 AS SHOWN	9'-5	1473	2771	25.9
	f1	25 - #5 @ 1'-0	7'-8	200		
	f2	8 - #5 @ 1'-0	24'-8	206		
	g1	26 - #6 @ 0'-11½	7'-8	299		
	g2	9 - #8 @ 0'-11	24'-8	593		
3'-6 x 9' x 25'	d2	46 - #9 AS SHOWN	9'-5	1473	3007	29.2
	f1	25 - #5 @ 1'-0	8'-8	226		
	f2	9 - #5 @ 1'-0	24'-8	232		
	g1	32 - #6 @ 0'-9	8'-8	417		
	g2	10 - #8 @ 0'-11	24'-8	659		
3'-6 x 9' x 27'	d2	46 - #9 AS SHOWN	9'-5	1473	3569	31.5
	f1	27 - #5 @ 1'-0	8'-8	244		
	f2	9 - #5 @ 1'-0	26'-8	250		
	g1	29 - #7 @ 0'-11	8'-8	514		
	g2	12 - #9 @ 0'-9	26'-8	1088		
3'-6 x 10' x 27'	d2	46 - #9 AS SHOWN	9'-5	1473	3976	35.0
	f1	27 - #5 @ 1'-0	9'-8	272		
	f2	10 - #5 @ 1'-0	26'-8	278		
	g1	30 - #8 @ 0'-10½	9'-8	774		
	g2	13 - #9 @ 0'-9½	26'-8	1179		

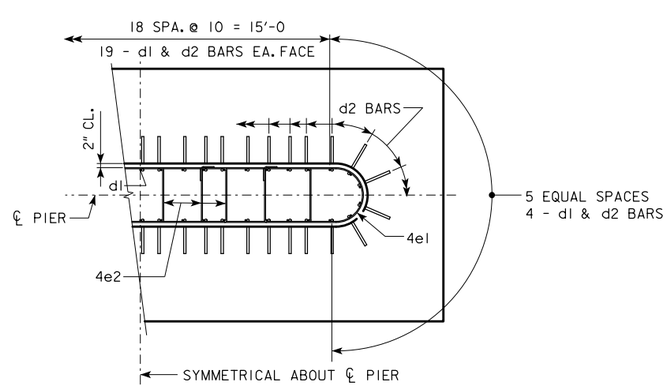

d2 BAR LAYOUT
(SEE SECTION A-A ON SHEET H40-65-14.)

FOOTING NOTES:

THESE SPREAD FOOTINGS ARE DESIGNED AND DETAILED TO BE USED WITH THE CAP AND COLUMN DETAILS OF THE TEE PIERS AS SHOWN ON SHEET H40-65-14.

THESE SPREAD FOOTINGS SHALL EXTEND AT LEAST 12 INCHES INTO SUITABLE FOUNDATION ROCK AND THE LAST 12 INCHES OF ROCK EXCAVATION SHALL BE TO NEAT LINES OF MASONRY. THE FOUNDATION ROCK SHALL HAVE A MINIMUM LRFD NOMINAL BEARING RESISTANCE OF 30 KIPS PER SQUARE FOOT (ALLOWABLE SERVICE LOAD BEARING VALUE OF AT LEAST 10 KIPS PER SQUARE FOOT).

LATEST REVISION DATE

APPROVED BY BRIDGE ENGINEER

IOWA DOT Highway Division

STANDARD DESIGN - 40' ROADWAY, THREE SPAN BRIDGE

PRETENSIONED PRESTRESSED CONCRETE BEAM BRIDGES

SEPTEMBER, 2014

TEE PIER - SPREAD FOOTINGS

15° SKEW - H=16' TO 24'

H40-71-14

H IN FT.	℄ - ℄ ABUT. BRG.	FOOTING SIZE
25 TO 27	138′-10	4′ x 8′ x 26′
	151′-4 163′-10 176′-4 188′-10	4′ x 9′ x 26′
	201′-4	4′ x 9′ x 28′
	213′-10 226′-4 243′-0	4′ x 9′ x 30′
28 TO 30	138′-10 151′-4 163′-10 176′-4	4′ x 9′ x 26′
	188′-10 201′-4	4′ x 9′ x 28′
	213′-10 226′-4	4′ x 9′ x 30′
	243′-0	4′ x 10′ x 30′
31 TO 33	138′-10 151′-4 163′-10	4′ x 9′ x 26′
	176′-4 188′-10	4′ x 9′ x 28′
	201′-4 213′-10 226′-4	4′ x 9′ x 30′
	243′-0	4′ x 10′ x 30′
34 TO 36	138′-10 151′-4 163′-10	4′ x 9′ x 26′
	176′-4 188′-10	4′ x 9′ x 28′
	201′-4 213′-10	4′ x 9′ x 30′
	226′-4 243′-0	4′ x 10′ x 30′
37 TO 40	138′-10 151′-4	4′ x 9′ x 26′
	163′-10 176′-4 188′-10	4′ x 9′ x 28′
	201′-4 213′-10	4′ x 9′ x 30′
	226′-4 243′-0	4′ x 10′ x 30′

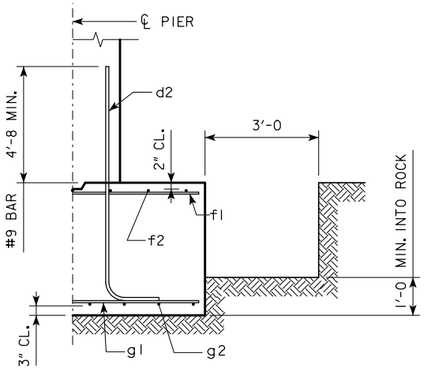

TYPICAL SECTION

NOTE: THE REINFORCING STEEL QUANTITY IS TO BE INCLUDED ON THE SUMMARY QUANTITIES SHEET IN THE PLAN.

NOTE: THE CONCRETE QUANTITY IS TO BE INCLUDED ON THE SUMMARY QUANTITIES SHEET IN THE PLAN.

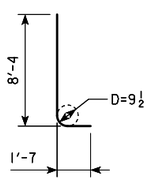

d2

NOTE: D = PIN DIAMETER.
DIMENSIONS ARE OUT TO OUT.

FOOTING SIZE	REINFORCING STEEL (ONE FOOTING)					STRUCTURAL CONCRETE (CY)
	BAR	NO., SIZE & SPACING	LENGTH	WEIGHT (LB.)	TOTAL WEIGHT (LB.)	
4′ x 8′ x 26′	d2	46 - #9 AS SHOWN	9′-11	1551	2889	30.8
	f1	26 - #5 @ 1′-0	7′-8	208		
	f2	8 - #5 @ 1′-0	25′-8	214		
	g1	26 - #6 @ 1′-0	7′-8	299		
	g2	9 - #8 @ 0′-11	25′-8	617		
4′ x 9′ x 26′	d2	46 - #9 AS SHOWN	9′-11	1551	3172	34.7
	f1	26 - #5 @ 1′-0	8′-8	235		
	f2	9 - #5 @ 1′-0	25′-8	241		
	g1	30 - #6 @ 0′-10½	8′-8	391		
	g2	11 - #8 @ 0′-10	25′-8	754		
4′ x 9′ x 28′	d2	46 - #9 AS SHOWN	9′-11	1551	3717	37.3
	f1	28 - #5 @ 1′-0	8′-8	253		
	f2	9 - #5 @ 1′-0	27′-8	260		
	g1	33 - #6 @ 0′-10	8′-8	430		
	g2	13 - #9 @ 0′-8½	27′-8	1223		
4′ x 9′ x 30′	d2	46 - #9 AS SHOWN	9′-11	1551	4163	40.0
	f1	30 - #5 @ 1′-0	8′-8	271		
	f2	9 - #5 @ 1′-0	29′-8	278		
	g1	30 - #7 @ 1′-0	8′-8	531		
	g2	12 - #10 @ 0′-9	29′-8	1532		
4′ x 10′ x 30′	d2	46 - #9 AS SHOWN	9′-11	1551	4596	44.4
	f1	30 - #5 @ 1′-0	9′-8	302		
	f2	10 - #5 @ 1′-0	29′-8	309		
	g1	30 - #8 @ 1′-0	9′-8	774		
	g2	13 - #10 @ 0′-9½	29′-8	1660		

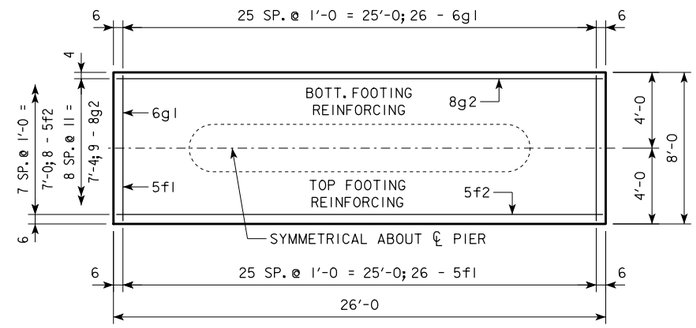

4′-0 x 8′-0 x 26′-0

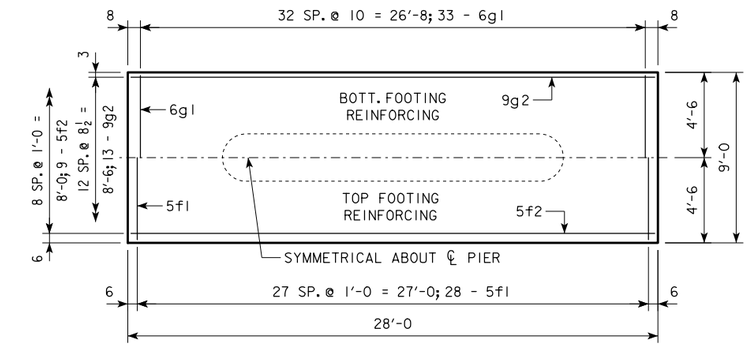

4′-0 x 9′-0 x 28′-0

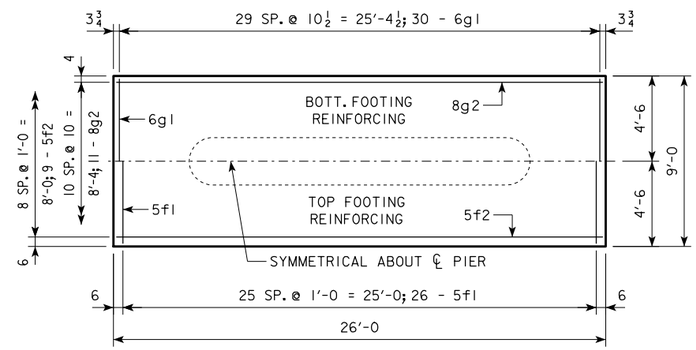

4′-0 x 9′-0 x 26′-0

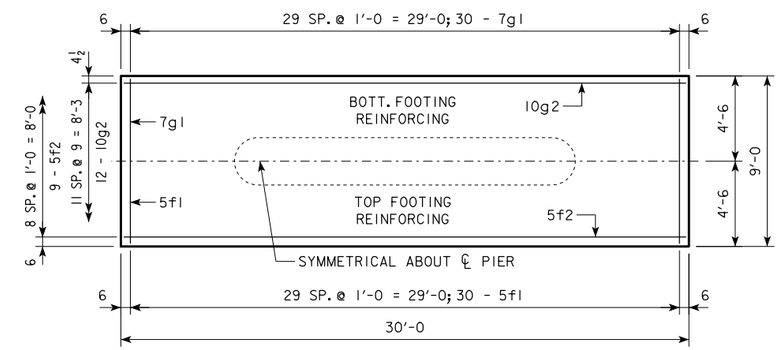

4′-0 x 9′-0 x 30′-0

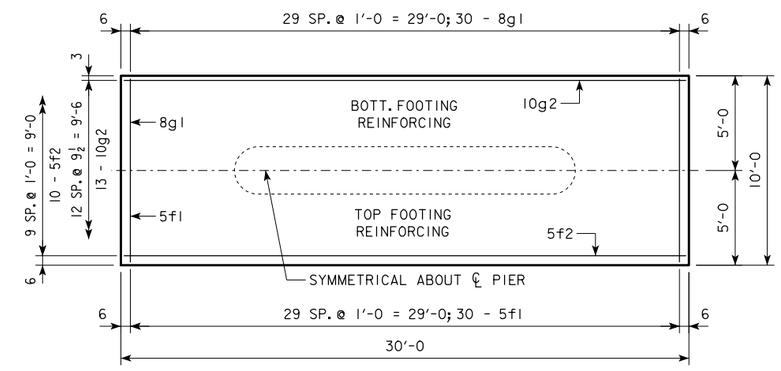

4′-0 x 10′-0 x 30′-0

FOOTING NOTES:

THESE SPREAD FOOTINGS ARE DESIGNED AND DETAILED TO BE USED WITH THE CAP AND COLUMN DETAILS OF THE TEE PIERS AS SHOWN ON SHEET H40-65-14.

THESE SPREAD FOOTINGS SHALL EXTEND AT LEAST 12 INCHES INTO SUITABLE FOUNDATION ROCK AND THE LAST 12 INCHES OF ROCK EXCAVATION SHALL BE TO NEAT LINES OF MASONRY. THE FOUNDATION ROCK SHALL HAVE A MINIMUM LRFD NOMINAL BEARING RESISTANCE OF 30 KIPS PER SQUARE FOOT (ALLOWABLE SERVICE LOAD BEARING VALUE OF AT LEAST 10 KIPS PER SQUARE FOOT).

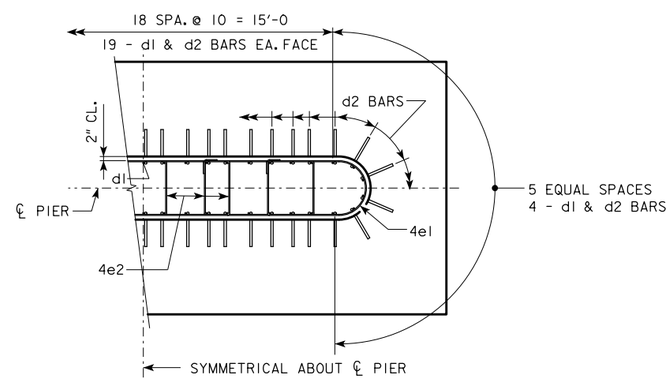

d2 BAR LAYOUT
(SEE SECTION A-A ON SHEET H40-65-14.)

LATEST REVISION DATE

APPROVED BY BRIDGE ENGINEER

IOWA DOT Highway Division

STANDARD DESIGN - 40′ ROADWAY, THREE SPAN BRIDGE

PRETENSIONED PRESTRESSED CONCRETE BEAM BRIDGES

SEPTEMBER, 2014

TEE PIER - SPREAD FOOTINGS

15° SKEW - H=25′ TO 40′

H40-72-14

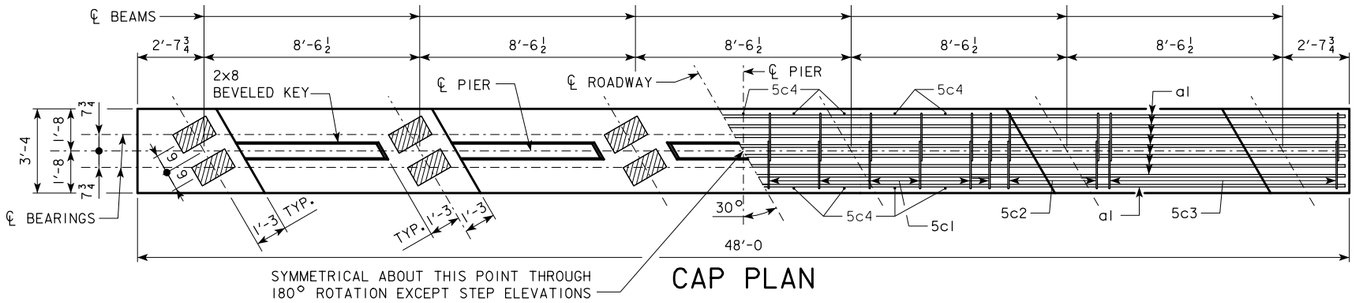

CAP PLAN

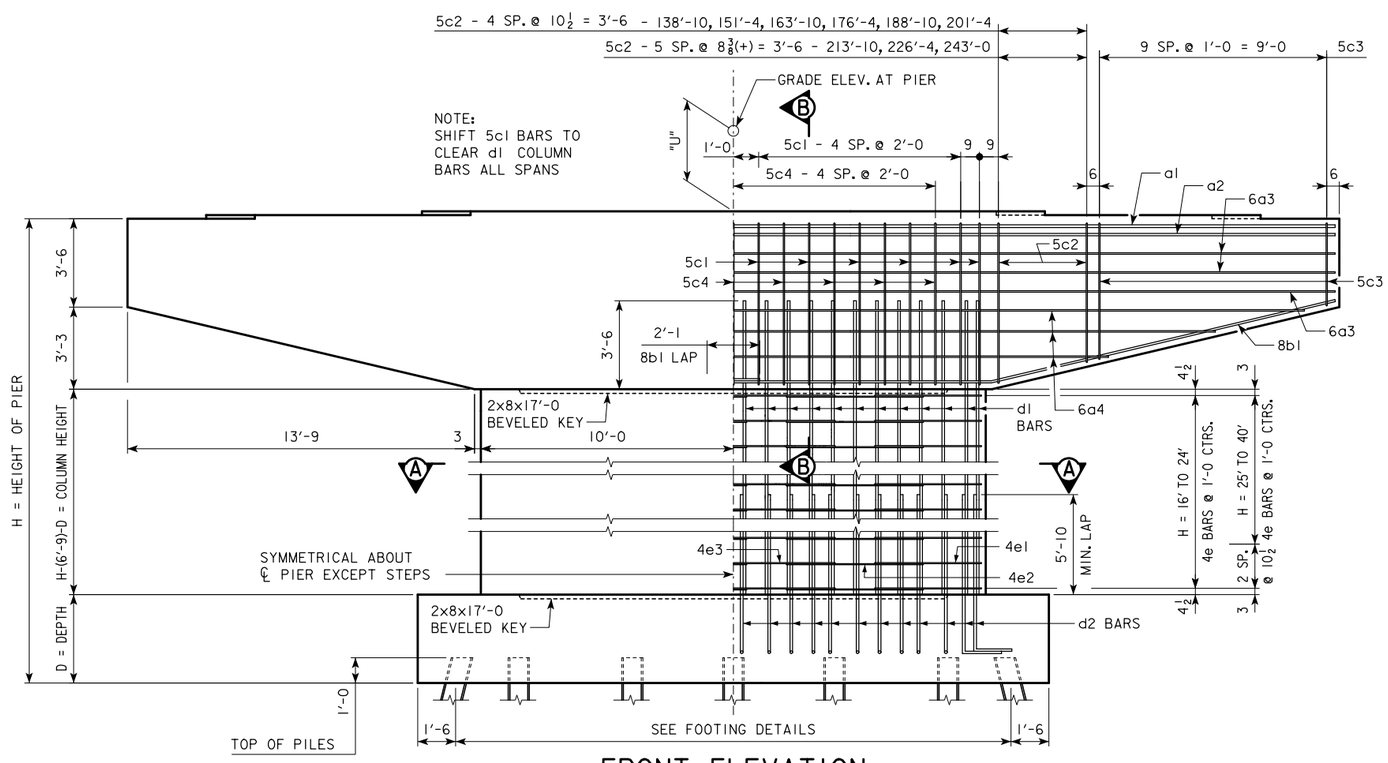

FRONT ELEVATION

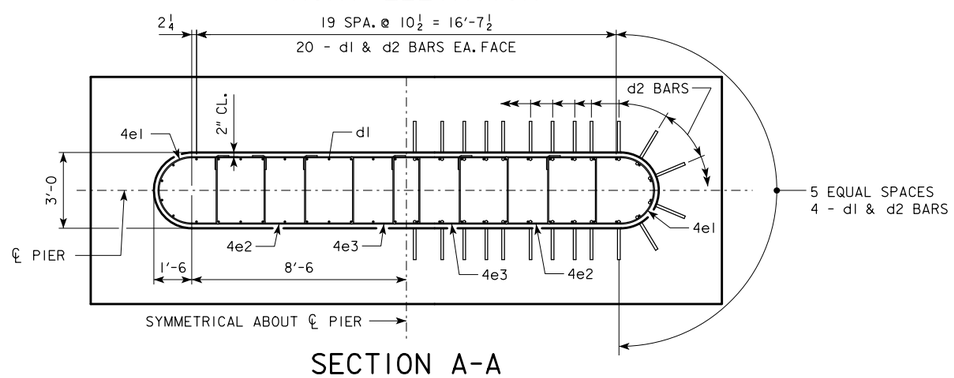

SECTION A-A

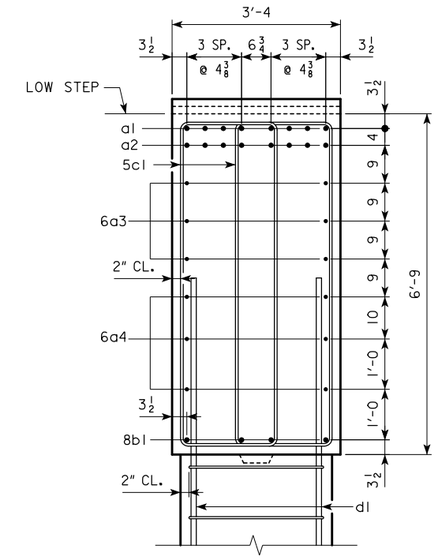

SECTION B-B

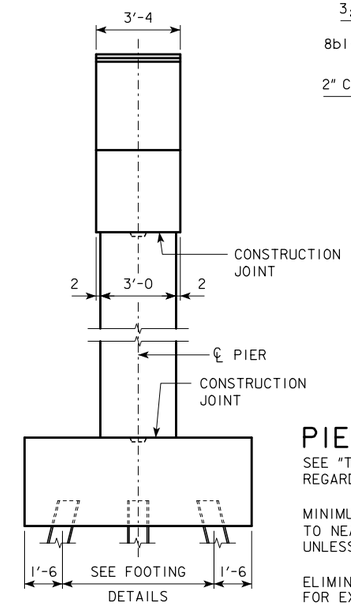

END ELEVATION

PIER NOTES:

SEE "TEE PIER NOTES" ON H40-02-14 FOR NOTES REGARDING APPLICATION OF THESE PIER STANDARDS.

MINIMUM CLEAR DISTANCE FROM FACE OF CONCRETE TO NEAR REINFORCING BAR SHALL BE 2 INCHES UNLESS OTHERWISE NOTED OR SHOWN.

ELIMINATE 2x8 BEVELED KEYWAY ON TOP OF CAP FOR EXPANSION PIERS.

FOR SIZE OF BEARING PADS, SEE H40-44-14.

SEE SHEET H40-22-14 FOR "U" DIMENSION.

LATEST REVISION DATE

APPROVED BY BRIDGE ENGINEER

IOWA DOT Highway Division

STANDARD DESIGN - 40' ROADWAY, THREE SPAN BRIDGE

PRETENSIONED PRESTRESSED CONCRETE BEAM BRIDGES

SEPTEMBER, 2014

TEE PIER CAP AND COLUMN

30° SKEW

H40-73-14

BENT BAR DETAILS

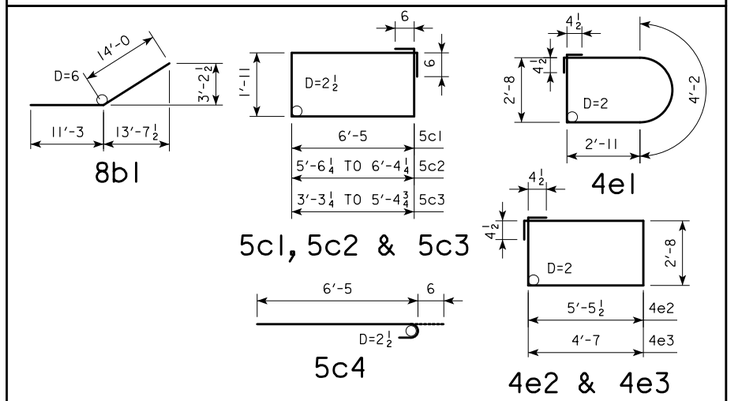

NOTE: ALL DIMENSIONS ARE OUT TO OUT.
D = PIN DIAMETER.

CAP

	℄ - ℄ ABUT. BEARINGS		138'-10			151'-4			163'-10			176'-4			188'-10			201'-4			213'-10			226'-4			243'-0		
REINFORCING STEEL	BAR	LENGTH	SHAPE	NO.	SIZE	WEIGHT	NO.	SIZE	WEIGHT	NO.	SIZE	WEIGHT	NO.	SIZE	WEIGHT	NO.	SIZE	WEIGHT	NO.	SIZE	WEIGHT	NO.	SIZE	WEIGHT	NO.	SIZE	WEIGHT	NO.	SIZE	WEIGHT
	a1	47'-8		8	8	1018	8	8	1018	8	9	1297	8	9	1297	8	9	1297	8	10	1641	8	10	1641	8	10	1641	8	10	1641
	a2	47'-8		8	8	1018	8	8	1018	8	8	1018	8	8	1018	8	9	1297	8	9	1297	8	9	1297	8	10	1641	8	10	1641
	6a3	47'-8		6	6	430	6	6	430	6	6	430	6	6	430	6	6	430	6	6	430	6	6	430	6	6	430	6	6	430
	6a4	VARIES		6	6	342	6	6	342	6	6	342	6	6	342	6	6	342	6	6	342	6	6	342	6	6	342	6	6	342
	8b1	25'-3		8	8	539	8	8	539	8	8	539	8	8	539	8	8	539	8	8	539	8	8	539	8	8	539	8	8	539
	5c1	17'-8		24	5	442	24	5	442	24	5	442	24	5	442	24	5	442	24	5	442	24	5	442	24	5	442	24	5	442
	5c2	VARIES		20	5	349	20	5	349	20	5	349	20	5	349	20	5	349	20	5	349	24	5	418	24	5	418	24	5	418
	5c3	VARIES		40	5	563	40	5	563	40	5	563	40	5	563	40	5	563	40	5	563	40	5	563	40	5	563	40	5	563
	5c4	6'-11		18	5	130	18	5	130	18	5	130	18	5	130	18	5	130	18	5	130	18	5	130	18	5	130	18	5	130
①	TOTAL (LB.)			4831			4831			5110			5110			5389			5733			5802			6146			6146		
STRUCTURAL CONCRETE (CY)				35.8			35.8			35.8			35.8			35.8			35.8			35.8			35.8			35.8		

COLUMN

H IN FEET	COLUMN HEIGHT	STRUCTURAL CONCRETE (CY)	REINFORCING STEEL																		TOTAL WEIGHT (LB.)
			d1 BAR				4e1 BAR				4e2 BAR				4e3 BAR						
			NO.	SIZE	LENGTH	WEIGHT	NO.	SIZE	LENGTH	WEIGHT	NO.	SIZE	LENGTH	WEIGHT	NO.	SIZE	LENGTH	WEIGHT			
16	5'-9	12.4	48	10	9'-3	1911	12	4	13'-5	108	12	4	17'-0	136	12	4	15'-3	122	2277		
17	6'-9	14.5	48	10	10'-3	2117	14	4	13'-5	125	14	4	17'-0	159	14	4	15'-3	143	2544		
18	7'-9	16.7	48	10	11'-3	2324	16	4	13'-5	143	16	4	17'-0	182	16	4	15'-3	163	2812		
19	8'-9	18.8	48	10	12'-3	2530	18	4	13'-5	161	18	4	17'-0	204	18	4	15'-3	183	3078		
20	9'-9	21.0	48	10	13'-3	2737	20	4	13'-5	179	20	4	17'-0	227	20	4	15'-3	204	3347		
21	10'-9	23.1	48	10	14'-3	2943	22	4	13'-5	197	22	4	17'-0	250	22	4	15'-3	224	3614		
22	11'-9	25.3	48	10	15'-3	3150	24	4	13'-5	215	24	4	17'-0	273	24	4	15'-3	244	3882		
23	12'-9	27.4	48	10	16'-3	3356	26	4	13'-5	233	26	4	17'-0	295	26	4	15'-3	265	4149		
24	13'-9	29.6	48	10	17'-3	3563	28	4	13'-5	251	28	4	17'-0	318	28	4	15'-3	285	4417		
25	14'-3	30.6	48	10	17'-9	3666	30	4	13'-5	269	30	4	17'-0	341	30	4	15'-3	306	4582		
26	15'-3	32.8	48	10	18'-9	3873	32	4	13'-5	287	32	4	17'-0	363	32	4	15'-3	326	4849		
27	16'-3	34.9	48	10	19'-9	4079	34	4	13'-5	305	34	4	17'-0	386	34	4	15'-3	346	5116		
28	17'-3	37.1	48	10	20'-9	4286	36	4	13'-5	323	36	4	17'-0	409	36	4	15'-3	367	5385		
29	18'-3	39.3	48	10	21'-9	4492	38	4	13'-5	341	38	4	17'-0	432	38	4	15'-3	387	5652		
30	19'-3	41.4	48	10	22'-9	4699	40	4	13'-5	358	40	4	17'-0	454	40	4	15'-3	407	5918		
31	20'-3	43.6	48	10	23'-9	4905	42	4	13'-5	376	42	4	17'-0	477	42	4	15'-3	428	6186		
32	21'-3	45.7	48	10	24'-9	5112	44	4	13'-5	394	44	4	17'-0	500	44	4	15'-3	448	6454		
33	22'-3	47.9	48	10	25'-9	5319	46	4	13'-5	412	46	4	17'-0	522	46	4	15'-3	469	6722		
34	23'-3	50.0	48	10	26'-9	5525	48	4	13'-5	430	48	4	17'-0	545	48	4	15'-3	489	6989		
35	24'-3	52.2	48	10	27'-9	5732	50	4	13'-5	448	50	4	17'-0	568	50	4	15'-3	509	7257		
36	25'-3	54.3	48	10	28'-9	5938	52	4	13'-5	466	52	4	17'-0	591	52	4	15'-3	530	7525		
37	26'-3	56.5	48	10	29'-9	6145	54	4	13'-5	484	54	4	17'-0	613	54	4	15'-3	550	7792		
38	27'-3	58.6	48	10	30'-9	6351	56	4	13'-5	502	56	4	17'-0	636	56	4	15'-3	570	8059		
39	28'-3	60.8	48	10	31'-9	6558	58	4	13'-5	520	58	4	17'-0	659	58	4	15'-3	591	8328		
40	29'-3	62.9	48	10	32'-9	6764	60	4	13'-5	538	60	4	17'-0	681	60	4	15'-3	611	8594		

NOTE: THE REINFORCING STEEL QUANTITIES FOR THE CAP AND COLUMN ARE TO BE INCLUDED ON THE SUMMARY QUANTITIES SHEET IN THE PLAN.

NOTE: THE CONCRETE QUANTITIES FOR THE CAP AND COLUMN COLUMN ARE TO BE INCLUDED ON THE SUMMARY QUANTITIES SHEET IN THE PLAN.

① SEE SHEET H40-24-14 FOR STEP REINFORCING STEEL QUANTITIES AND DETAILS.

LATEST REVISION DATE

APPROVED BY BRIDGE ENGINEER

IOWA DOT Highway Division

STANDARD DESIGN - 40' ROADWAY, THREE SPAN BRIDGE

PRETENSIONED PRESTRESSED CONCRETE BEAM BRIDGES

SEPTEMBER, 2014

TEE PIER CAP AND COLUMN

30° SKEW

H40-74-14

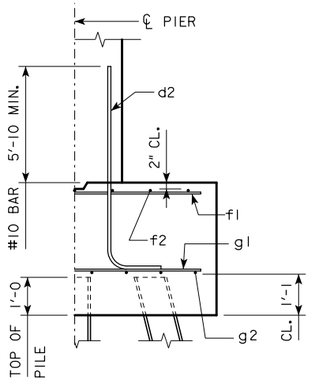

TYPICAL SECTION

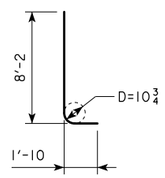

d2

NOTE: D = PIN DIAMETER.
DIMENSIONS ARE OUT TO OUT.

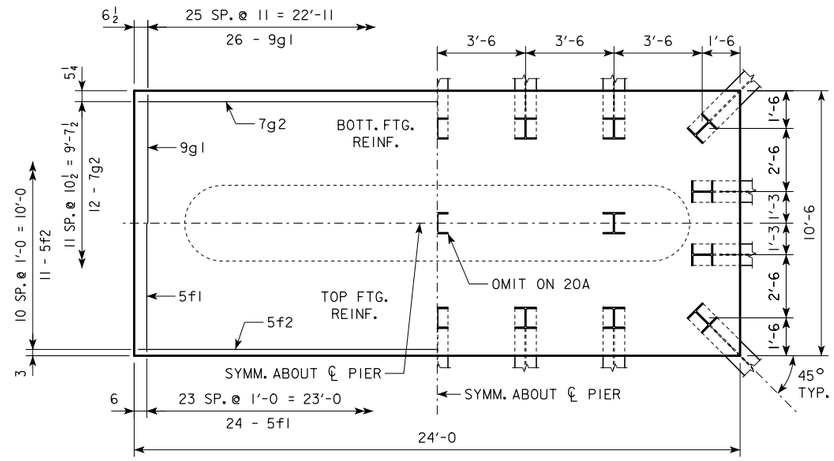

3'-6 x 10'-6 x 24'-0 FOR 20A & 21A

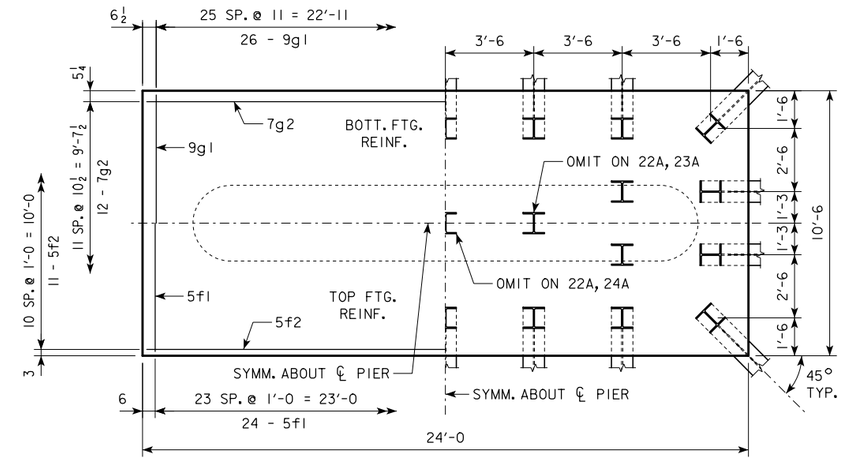

3'-6 x 10'-6 x 24'-0 FOR 22A, 23A & 24A

NOTE: THE REINFORCING STEEL QUANTITY IS TO BE INCLUDED ON THE SUMMARY QUANTITIES SHEET IN THE PLAN.

NOTE: THE CONCRETE QUANTITY IS TO BE INCLUDED ON THE SUMMARY QUANTITIES SHEET IN THE PLAN.

NOTE: THE PILE TYPE IS TO BE INCLUDED ON THE SUMMARY QUANTITIES SHEET IN THE PLAN.

H IN FT.	℄ - ℄ ABUT. BRG.	PILING (HP10x57) NO. & LAYOUT	① LRFD PU, STRENGTH I DES. LOAD (KIPS)	FOOTING SIZE
16 TO 18	201'-4	20A	143	3'-6 x 10'-6 x 24'
	213'-10	21A	144	
	226'-4	22A	142	
	243'-0	23A	144	
19 TO 21	201'-4	20A	146	3'-6 x 10'-6 x 24'
	213'-10	22A	139	
	226'-4	22A	145	
	243'-0	24A	143	
22 TO 24	201'-4	21A	145	3'-6 x 10'-6 x 24'
	213'-10	22A	143	
	226'-4	23A	145	
	243'-0	24A	146	

FOOTING SIZE	REINFORCING STEEL (ONE FOOTING) BAR	NO., SIZE & SPACING	LENGTH	WEIGHT (LB.)	TOTAL WEIGHT (LB.)	STRUCTURAL CONCRETE (CY)
3'-6 x 10'-6 x 24'	d2	48 - #10 AS SHOWN	10'-0	2065	4070	32.7
	f1	24 - #5 @ 1'-0	10'-2	254		
	f2	11 - #5 @ 1'-0	23'-8	272		
	g1	26 - #9 @ 0'-11	10'-2	899		
	g2	12 - #7 @ 0'-10½	23'-8	580		

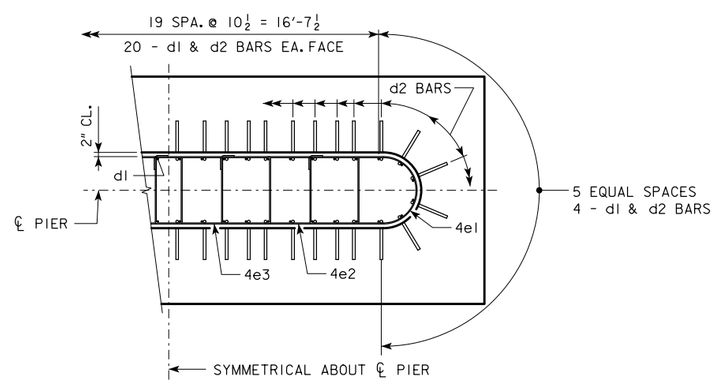

d2 BAR LAYOUT
(SEE SECTION A-A ON SHEET H40-73-14.)

① NOTE: PU, STRENGTH I DESIGN LOAD (KIPS) IS NOT THE VALUE USED IN THE FIELD FOR DRIVING PILES.

FOOTING NOTES:

THESE FOOTINGS ARE DESIGNED AND DETAILED TO BE USED WITH THE CAP AND COLUMN DETAILS OF THE TEE PIERS AS SHOWN ON SHEET H40-73-14.

BATTER PILES IN EXTERIOR ROWS 1:4 IN THE DIRECTION SHOWN.

STEEL PILING USED AS POINT BEARING SHALL HAVE A MINIMUM DISTANCE OF APPROXIMATELY 10 FEET FROM BOTTOM OF FOOTING TO TOP OF BEARING ROCK. THE PILE LAYOUTS ARE SUCH THAT THE DISTANCE CENTER TO CENTER OF ADJACENT PILING SHALL NOT EXCEED 8'-0.

PIER PILES SHALL BE DRIVEN TO VALUES SHOWN IN DESIGN PLANS.

LATEST REVISION DATE

APPROVED BY BRIDGE ENGINEER

IOWA DOT Highway Division

STANDARD DESIGN - 40' ROADWAY, THREE SPAN BRIDGE

PRETENSIONED PRESTRESSED CONCRETE BEAM BRIDGES

SEPTEMBER, 2014

TEE PIER-HP10x57 SRL-1 STEEL PILE FOOTINGS

30° SKEW - H=16' TO 24'

H40-75-14

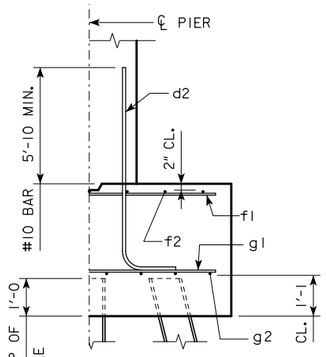

TYPICAL SECTION

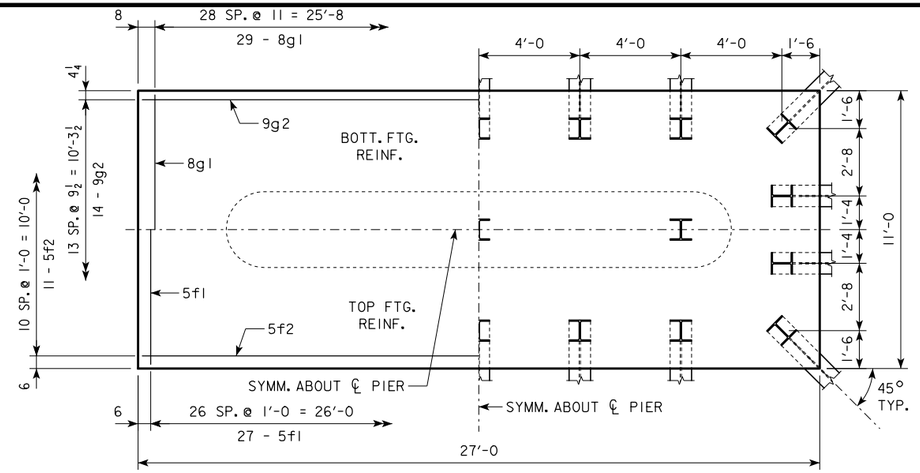

4'-0 x 11'-0 x 27'-0 FOR 21B

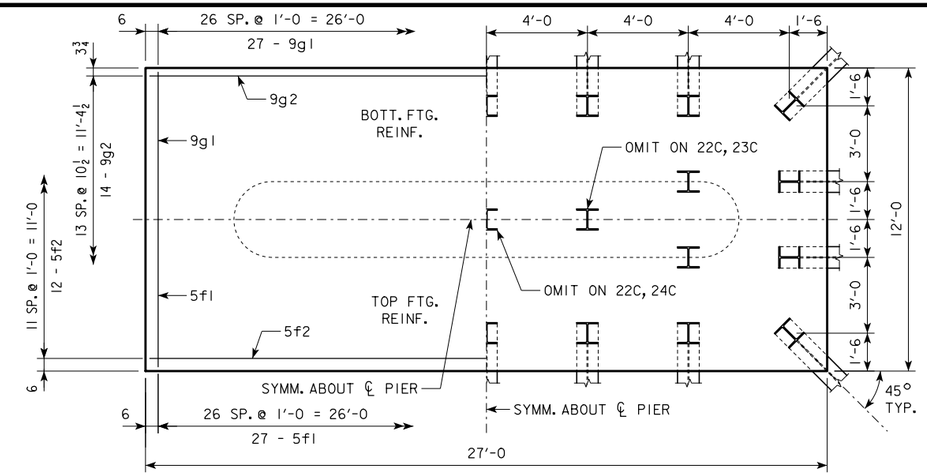

4'-0 x 12'-0 x 27'-0 FOR 22C, 23C, 24C & 25B

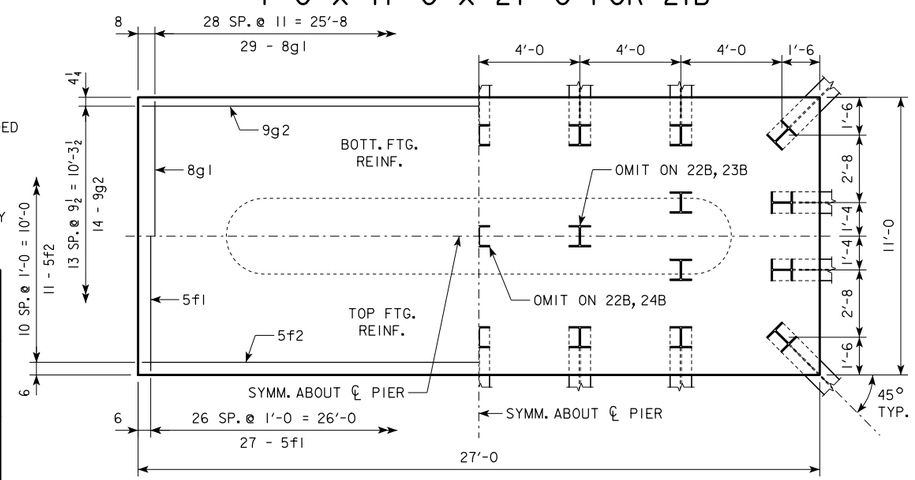

4'-0 x 11'-0 x 27'-0 FOR 22B, 23B, 24B & 25A

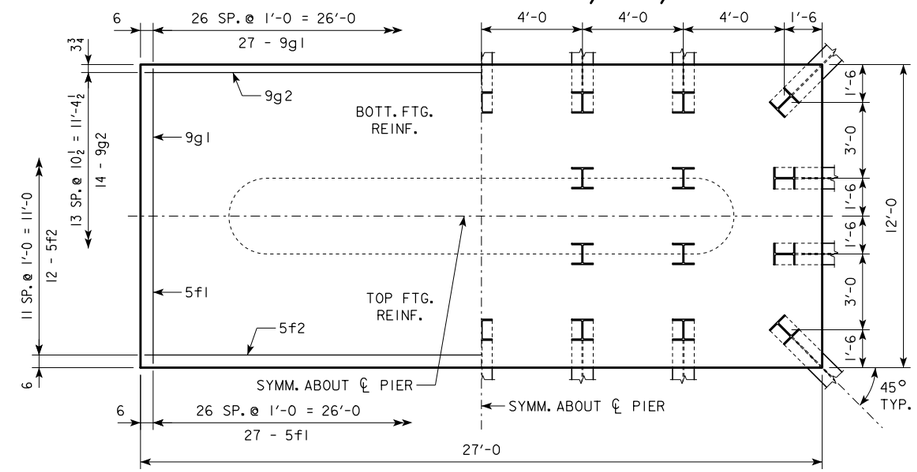

4'-0 x 12'-0 x 27'-0 FOR 26A

NOTE: THE REINFORCING STEEL QUANTITY IS TO BE INCLUDED ON THE SUMMARY QUANTITIES SHEET IN THE PLAN.

NOTE: THE CONCRETE QUANTITY IS TO BE INCLUDED ON THE SUMMARY QUANTITIES SHEET IN THE PLAN.

NOTE: THE PILE TYPE IS TO BE INCLUDED ON THE SUMMARY QUANTITIES SHEET IN THE PLAN.

H IN FT.	℄ - ℄ ABUT. BRG.	PILING (HP10x57) NO. & LAYOUT	PILING (HP10x57) (1) LRFD PU, STRENGTH I DES. LOAD (KIPS)	FOOTING SIZE
25 TO 27	201'-4	21B	144	4' x 11' x 27'
	213'-10	22B	141	
	226'-4	23B	143	
	243'-0	24B	144	
28 TO 30	201'-4	22B	139	4' x 11' x 27'
	213'-10	22B	144	
	226'-4	23B	146	
	243'-0	24B	146	
31 TO 33	201'-4	22B	142	4' x 11' x 27'
	213'-10	22B	147	
	226'-4	24B	144	
	243'-0	25A	145	
34 TO 36	201'-4	22C	144	4' x 12' x 27'
	213'-10	23C	144	
	226'-4	24C	145	
	243'-0	25B	147	
37 TO 40	201'-4	23C	143	4' x 12' x 27'
	213'-10	24C	143	
	226'-4	25B	145	
	243'-0	26A	145	

(1) NOTE: PU, STRENGTH I DESIGN LOAD (KIPS) IS NOT THE VALUE USED IN THE FIELD FOR DRIVING PILES.

FOOTING SIZE	REINFORCING STEEL (ONE FOOTING) BAR	NO., SIZE & SPACING	LENGTH	WEIGHT (LB.)	TOTAL WEIGHT (LB.)	STRUCTURAL CONCRETE (CY)
4' x 11' x 27'	d2	48 - #10 AS SHOWN	10'-6	2169	4870	44.0
	f1	27 - #5 @ 1'-0	10'-8	300		
	f2	11 - #5 @ 1'-0	26'-8	306		
	g1	29 - #8 @ 0'-11	10'-8	826		
	g2	14 - #9 @ 0'-9½	26'-8	1269		
4' x 12' x 27'	d2	48 - #10 AS SHOWN	10'-6	2169	5172	48.0
	f1	27 - #5 @ 1'-0	11'-8	329		
	f2	12 - #5 @ 1'-0	26'-8	334		
	g1	27 - #9 @ 1'-0	11'-8	1071		
	g2	14 - #9 @ 0'-10½	26'-8	1269		

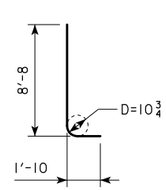

d2

NOTE: D = PIN DIAMETER. DIMENSIONS ARE OUT TO OUT.

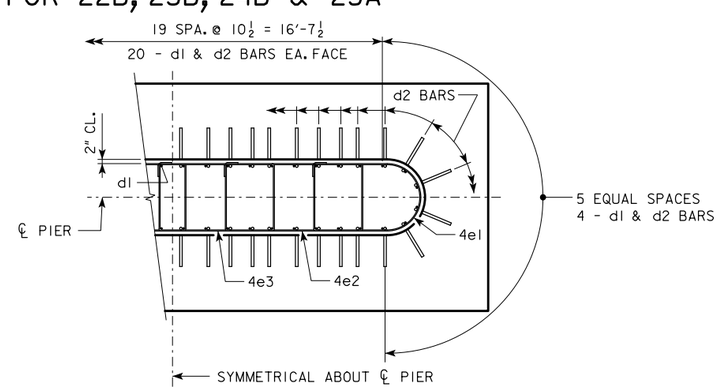

d2 BAR LAYOUT

(SEE SECTION A-A ON SHEET H40-73-14.)

FOOTING NOTES:

THESE FOOTINGS ARE DESIGNED AND DETAILED TO BE USED WITH THE CAP AND COLUMN DETAILS OF THE TEE PIERS AS SHOWN ON SHEET H40-73-14.

BATTER PILES IN EXTERIOR ROWS 1:4 IN THE DIRECTION SHOWN.

STEEL PILING USED AS POINT BEARING SHALL HAVE A MINIMUM DISTANCE OF APPROXIMATELY 10 FEET FROM BOTTOM OF FOOTING TO TOP OF BEARING ROCK. THE PILE LAYOUTS ARE SUCH THAT THE DISTANCE CENTER TO CENTER OF ADJACENT PILING SHALL NOT EXCEED 8'-0.

PIER PILES SHALL BE DRIVEN TO VALUES SHOWN IN DESIGN PLANS.

LATEST REVISION DATE

APPROVED BY BRIDGE ENGINEER

IOWA DOT Highway Division

STANDARD DESIGN - 40' ROADWAY, THREE SPAN BRIDGE

PRETENSIONED PRESTRESSED CONCRETE BEAM BRIDGES

SEPTEMBER, 2014

TEE PIER-HP10x57 SRL-I STEEL PILE FOOTINGS

30° SKEW - H=25' TO 40'

H40-76-14

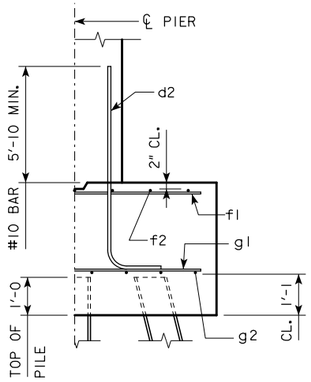

TYPICAL SECTION

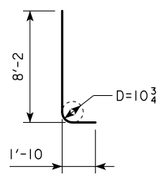

d2

NOTE: D = PIN DIAMETER.
DIMENSIONS ARE OUT TO OUT.

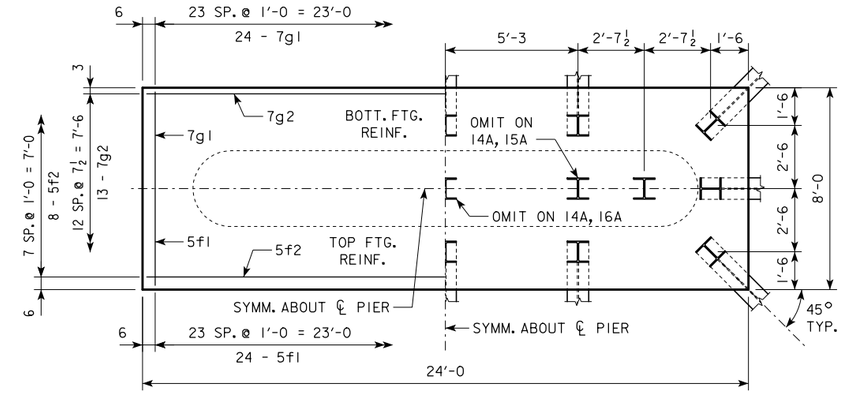

3'-6 x 8'-0 x 24'-0 FOR 14A, 15A & 16A

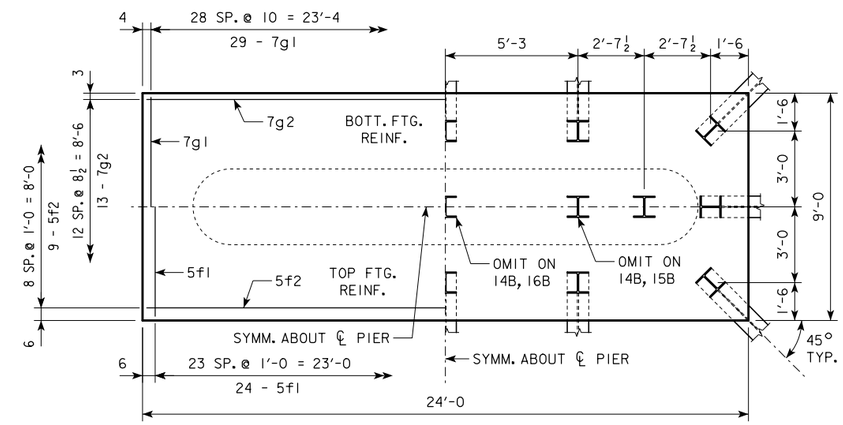

3'-6 x 9'-0 x 24'-0 FOR 14B, 15B & 16B

NOTE: THE REINFORCING STEEL QUANTITY IS TO BE INCLUDED ON THE SUMMARY QUANTITIES SHEET IN THE PLAN.

NOTE: THE CONCRETE QUANTITY IS TO BE INCLUDED ON THE SUMMARY QUANTITIES SHEET IN THE PLAN.

NOTE: THE PILE TYPE IS TO BE INCLUDED ON THE SUMMARY QUANTITIES SHEET IN THE PLAN.

H IN FT.	℄ - ℄ ABUT. BRG.	PILING (HP10x57) NO. & LAYOUT	① LRFD PU, STRENGTH I DES. LOAD (KIPS)	FOOTING SIZE
16 TO 18	201'-4	14A	206	3'-6 x 8' x 24'
	213'-10	14A	213	
	226'-4	15A	213	
	243'-0	16A	210	
19 TO 21	201'-4	14A	211	3'-6 x 8' x 24'
	213'-10	14A	219	
	226'-4	15A	219	
	243'-0	16A	215	
22 TO 24	201'-4	14B	214	3'-6 x 9' x 24'
	213'-10	15B	212	
	226'-4	16B	209	
	243'-0	16B	217	

FOOTING SIZE	REINFORCING STEEL (ONE FOOTING) BAR	NO., SIZE & SPACING	LENGTH	WEIGHT (LB.)	TOTAL WEIGHT (LB.)	STRUCTURAL CONCRETE (CY)
3'-6 x 8' x 24'	d2	48 - #10 AS SHOWN	10'-0	2065	3459	24.9
	f1	24 - #5 @ 1'-0	7'-8	192		
	f2	8 - #5 @ 1'-0	23'-8	197		
	g1	24 - #7 @ 1'-0	7'-8	376		
	g2	13 - #7 @ 0'-7½	23'-8	629		
3'-6 x 9' x 24'	d2	48 - #10 AS SHOWN	10'-0	2065	3647	28.0
	f1	24 - #5 @ 1'-0	8'-8	217		
	f2	9 - #5 @ 1'-0	23'-8	222		
	g1	29 - #7 @ 0'-10	8'-8	514		
	g2	13 - #7 @ 0'-8½	23'-8	629		

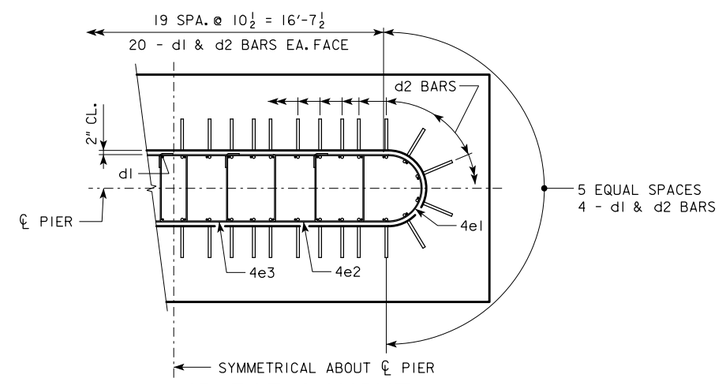

d2 BAR LAYOUT
(SEE SECTION A-A ON SHEET H40-73-14.)

① NOTE: PU, STRENGTH I DESIGN LOAD (KIPS) IS NOT THE VALUE USED IN THE FIELD FOR DRIVING PILES.

FOOTING NOTES:

THESE FOOTINGS ARE DESIGNED AND DETAILED TO BE USED WITH THE CAP AND COLUMN DETAILS OF THE TEE PIERS AS SHOWN ON SHEET H40-73-14.

BATTER PILES IN EXTERIOR ROWS 1:4 IN THE DIRECTION SHOWN.

STEEL PILING USED AS POINT BEARING SHALL HAVE A MINIMUM DISTANCE OF APPROXIMATELY 10 FEET FROM BOTTOM OF FOOTING TO TOP OF BEARING ROCK. THE PILE LAYOUTS ARE SUCH THAT THE DISTANCE CENTER TO CENTER OF ADJACENT PILING SHALL NOT EXCEED 8'-0.

PIER PILES SHALL BE DRIVEN TO VALUES SHOWN IN DESIGN PLANS.

LATEST REVISION DATE

APPROVED BY BRIDGE ENGINEER

IOWA DOT Highway Division

STANDARD DESIGN - 40' ROADWAY, THREE SPAN BRIDGE

PRETENSIONED PRESTRESSED CONCRETE BEAM BRIDGES

SEPTEMBER, 2014

TEE PIER-HP10x57 SRL-2 STEEL PILE FOOTINGS

30° SKEW - H=16' TO 24'

H40-77-14

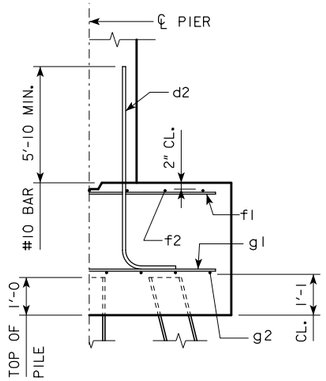

TYPICAL SECTION

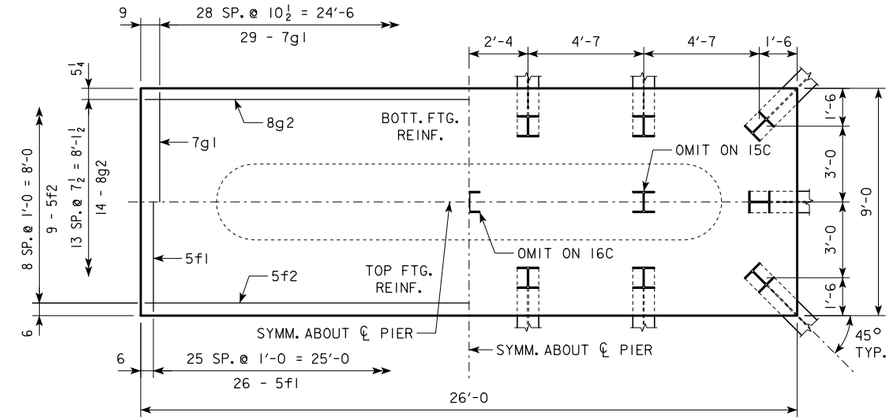

4'-0 x 9'-0 x 26'-0 FOR 15C, 16C & 17A

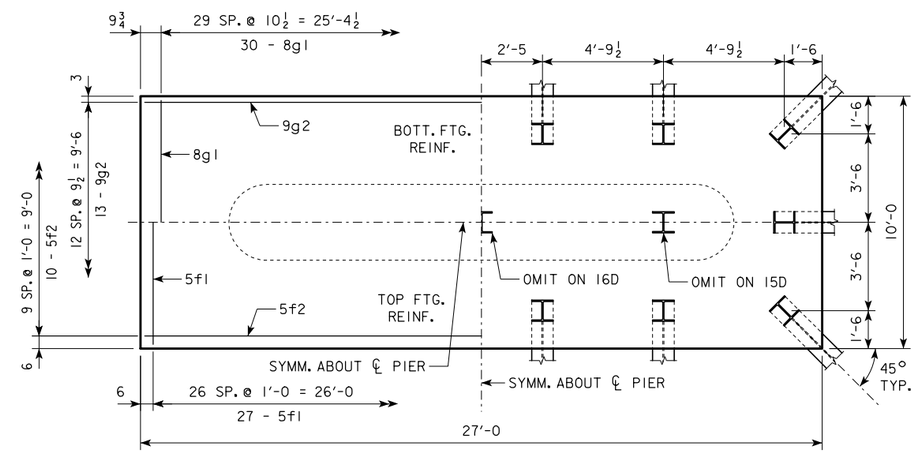

4'-0 x 10'-0 x 27'-0 FOR 15D, 16D & 17B

NOTE: THE REINFORCING STEEL QUANTITY IS TO BE INCLUDED ON THE SUMMARY QUANTITIES SHEET IN THE PLAN.

NOTE: THE CONCRETE QUANTITY IS TO BE INCLUDED ON THE SUMMARY QUANTITIES SHEET IN THE PLAN.

NOTE: THE PILE TYPE IS TO BE INCLUDED ON THE SUMMARY QUANTITIES SHEET IN THE PLAN.

H IN FT.	℄ - ℄ ABUT. BRG.	PILING (HP10x57) NO. & LAYOUT	(1) LRFD PU, STRENGTH I DES. LOAD (KIPS)	FOOTING SIZE
25 TO 27	201'-4	15C	205	4' x 9' x 26'
	213'-10	15C	212	
	226'-4	16C	207	
	243'-0	16C	215	
28 TO 30	201'-4	15C	210	4' x 9' x 26'
	213'-10	15C	217	
	226'-4	16C	212	
	243'-0	16C	219	
31 TO 33	201'-4	15C	214	4' x 9' x 26'
	213'-10	16C	207	
	226'-4	16C	215	
	243'-0	17A	215	
34 TO 36	201'-4	15D	213	4' x 10' x 27'
	213'-10	16D	207	
	226'-4	16D	215	
	243'-0	17B	214	
37 TO 40	201'-4	15D	218	4' x 10' x 27'
	213'-10	16D	211	
	226'-4	16D	219	
	243'-0	17B	219	

(1) NOTE: PU, STRENGTH I DESIGN LOAD (KIPS) IS NOT THE VALUE USED IN THE FIELD FOR DRIVING PILES.

FOOTING SIZE	REINFORCING STEEL (ONE FOOTING) BAR	NO., SIZE & SPACING	LENGTH	WEIGHT (LB.)	TOTAL WEIGHT (LB.)	STRUCTURAL CONCRETE (CY)
4' x 9' x 26'	d2	48 - #10 AS SHOWN	10'-6	2169	4118	34.7
	f1	26 - #5 @ 1'-0	8'-8	235		
	f2	9 - #5 @ 1'-0	25'-8	241		
	g1	29 - #7 @ 0'-10½	8'-8	514		
	g2	14 - #8 @ 0'-7½	25'-8	959		
4' x 10' x 27'	d2	48 - #10 AS SHOWN	10'-6	2169	4672	40.0
	f1	27 - #5 @ 1'-0	9'-8	272		
	f2	10 - #5 @ 1'-0	26'-8	278		
	g1	30 - #8 @ 0'-10½	9'-8	774		
	g2	13 - #9 @ 0'-9½	26'-8	1179		

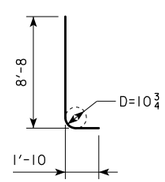

d2

NOTE: D = PIN DIAMETER. DIMENSIONS ARE OUT TO OUT.

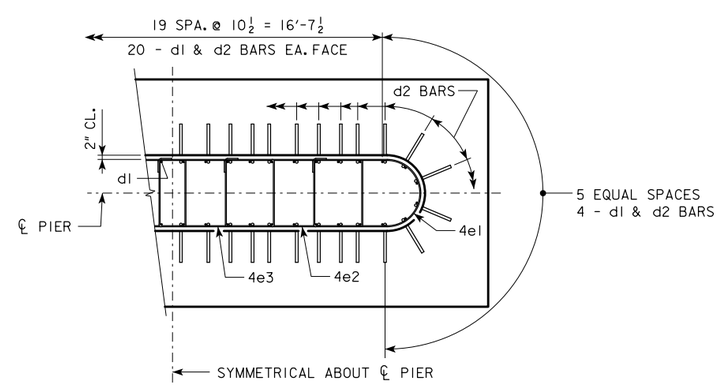

d2 BAR LAYOUT

(SEE SECTION A-A ON SHEET H40-73-14.)

FOOTING NOTES:

THESE FOOTINGS ARE DESIGNED AND DETAILED TO BE USED WITH THE CAP AND COLUMN DETAILS OF THE TEE PIERS AS SHOWN ON SHEET H40-73-14.

BATTER PILES IN EXTERIOR ROWS 1:4 IN THE DIRECTION SHOWN.

STEEL PILING USED AS POINT BEARING SHALL HAVE A MINIMUM DISTANCE OF APPROXIMATELY 10 FEET FROM BOTTOM OF FOOTING TO TOP OF BEARING ROCK. THE PILE LAYOUTS ARE SUCH THAT THE DISTANCE CENTER TO CENTER OF ADJACENT PILING SHALL NOT EXCEED 8'-0.

PIER PILES SHALL BE DRIVEN TO VALUES SHOWN IN DESIGN PLANS.

LATEST REVISION DATE

APPROVED BY BRIDGE ENGINEER

IOWA DOT Highway Division

STANDARD DESIGN - 40' ROADWAY, THREE SPAN BRIDGE

PRETENSIONED PRESTRESSED CONCRETE BEAM BRIDGES

SEPTEMBER, 2014

TEE PIER-HP10x57 SRL-2 STEEL PILE FOOTINGS

30° SKEW - H=25' TO 40'

H40-78-14

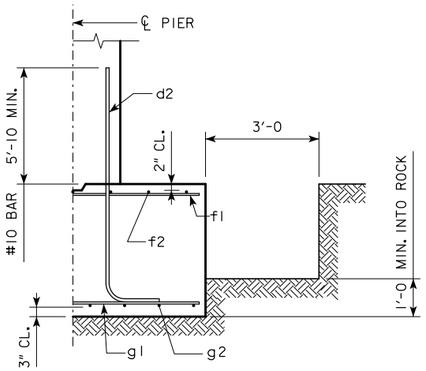

TYPICAL SECTION

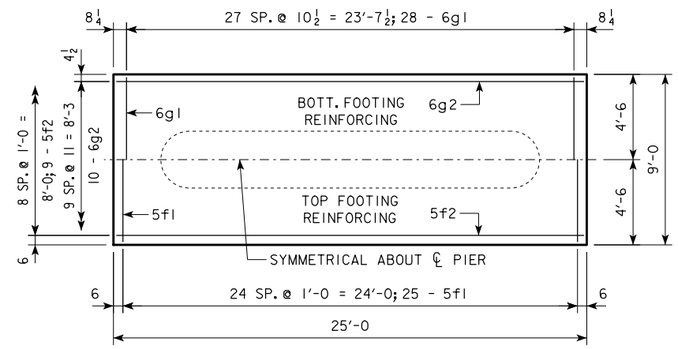

3'-6 x 9'-0 x 25'-0

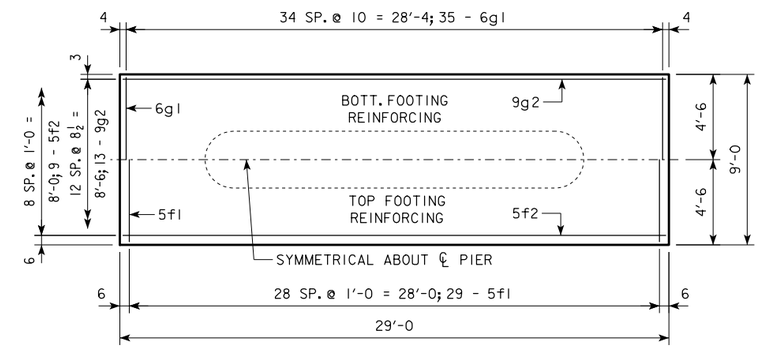

3'-6 x 9'-0 x 29'-0

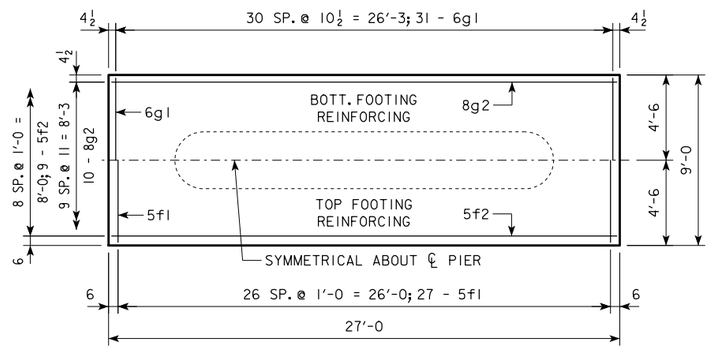

3'-6 x 9'-0 x 27'-0

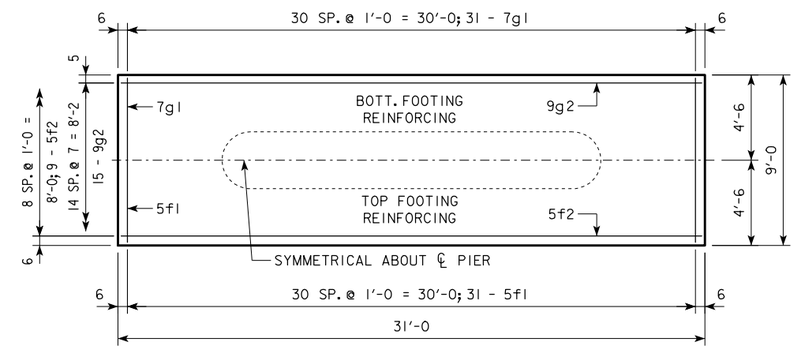

3'-6 x 9'-0 x 31'-0

H IN FT.	℄ - ℄ ABUT. BRG.	FOOTING SIZE
16 TO 18	138'-10 151'-4 163'-10 176'-4	3'-6 x 9' x 25'
	188'-10 201'-4	3'-6 x 9' x 27'
	213'-10 226'-4	3'-6 x 9' x 29'
	243'-0	3'-6 x 9' x 31'
19 TO 21	138'-10 151'-4 163'-10	3'-6 x 9' x 25'
	176'-4 188'-10	3'-6 x 9' x 27'
	201'-4 213'-10	3'-6 x 9' x 29'
	226'-4 243'-0	3'-6 x 9' x 31'
22 TO 24	138'-10 151'-4	3'-6 x 9' x 25'
	163'-10 176'-4 188'-10	3'-6 x 9' x 27'
	201'-4 213'-10	3'-6 x 9' x 29'
	226'-4 243'-0	3'-6 x 9' x 31'

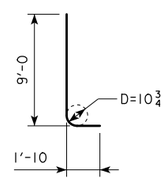

d2

NOTE: D = PIN DIAMETER.
DIMENSIONS ARE OUT TO OUT.

NOTE: THE REINFORCING STEEL QUANTITY IS TO BE INCLUDED ON THE SUMMARY QUANTITIES SHEET IN THE PLAN.

NOTE: THE CONCRETE QUANTITY IS TO BE INCLUDED ON THE SUMMARY QUANTITIES SHEET IN THE PLAN.

FOOTING SIZE	REINFORCING STEEL (ONE FOOTING)					STRUCTURAL CONCRETE (CY)
	BAR	NO., SIZE & SPACING	LENGTH	WEIGHT (LB.)	TOTAL WEIGHT (LB.)	
3'-6 x 9' x 25'	d2	48 - #10 AS SHOWN	10'-10	2238	3430	29.2
	f1	25 - #5 @ 1'-0	8'-8	226		
	f2	9 - #5 @ 1'-0	24'-8	232		
	g1	28 - #6 @ 0'-10½	8'-8	364		
	g2	10 - #6 @ 0'-11	24'-8	370		
3'-6 x 9' x 27'	d2	48 - #10 AS SHOWN	10'-10	2238	3848	31.5
	f1	27 - #5 @ 1'-0	8'-8	244		
	f2	9 - #5 @ 1'-0	26'-8	250		
	g1	31 - #6 @ 0'-10½	8'-8	404		
	g2	10 - #8 @ 0'-11	26'-8	712		
3'-6 x 9' x 29'	d2	48 - #10 AS SHOWN	10'-10	2238	4492	33.8
	f1	29 - #5 @ 1'-0	8'-8	262		
	f2	9 - #5 @ 1'-0	28'-8	269		
	g1	35 - #6 @ 0'-10	8'-8	456		
	g2	13 - #9 @ 0'-8½	28'-8	1267		
3'-6 x 9' x 31'	d2	48 - #10 AS SHOWN	10'-10	2238	4919	36.2
	f1	31 - #5 @ 1'-0	8'-8	280		
	f2	9 - #5 @ 1'-0	30'-8	288		
	g1	31 - #7 @ 1'-0	8'-8	549		
	g2	15 - #9 @ 0'-7	30'-8	1564		

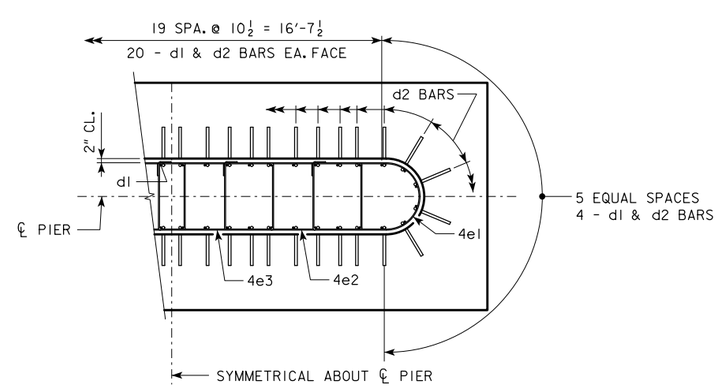

d2 LAYOUT
(SEE SECTION A-A ON SHEET H40-73-14.)

FOOTING NOTES:

THESE SPREAD FOOTINGS ARE DESIGNED AND DETAILED TO BE USED WITH THE CAP AND COLUMN DETAILS OF THE TEE PIERS AS SHOWN ON SHEET H40-73-14.

THESE SPREAD FOOTINGS SHALL EXTEND AT LEAST 12 INCHES INTO SUITABLE FOUNDATION ROCK AND THE LAST 12 INCHES OF ROCK EXCAVATION SHALL BE TO NEAT LINES OF MASONRY. THE FOUNDATION ROCK SHALL HAVE A MINIMUM LRFD NOMINAL BEARING RESISTANCE OF 30 KIPS PER SQUARE FOOT (ALLOWABLE SERVICE LOAD BEARING VALUE OF AT LEAST 10 KIPS PER SQUARE FOOT).

LATEST REVISION DATE

APPROVED BY BRIDGE ENGINEER

IOWA DOT Highway Division

STANDARD DESIGN - 40' ROADWAY, THREE SPAN BRIDGE

PRETENSIONED PRESTRESSED CONCRETE BEAM BRIDGES

SEPTEMBER, 2014

TEE PIER - SPREAD FOOTINGS

30° SKEW - H=16' TO 24'

H40-79-14

H IN FT.	℄ - ℄ ABUT. BRG.	FOOTING SIZE
25 TO 27	138′-10 151′-4 163′-10	4′ x 9′ x 26′
	176′-4 188′-10	4′ x 9′ x 28′
	201′-4 213′-10	4′ x 9′ x 30′
	226′-4 243′-0	4′ x 9′ x 32′
28 TO 30	138′-10 151′-4	4′ x 9′ x 26′
	163′-10 176′-4 188′-10	4′ x 9′ x 28′
	201′-4	4′ x 9′ x 30′
	213′-10 226′-4 243′-0	4′ x 9′ x 32′
31 TO 33	138′-10	4′ x 9′ x 26′
	151′-4 163′-10 176′-4	4′ x 9′ x 28′
	188′-10 201′-4	4′ x 9′ x 30′
	213′-10 226′-4	4′ x 9′ x 32′
	243′-0	4′ x 10′ x 32′
34 TO 36	138′-10	4′ x 9′ x 26′
	151′-4 163′-10	4′ x 9′ x 28′
	176′-4 188′-10	4′ x 9′ x 30′
	201′-4 213′-10	4′ x 9′ x 32′
	226′-4 243′-0	4′ x 10′ x 32′
37 TO 40	138′-10 151′-4	4′ x 9′ x 28′
	163′-10 176′-4 188′-10	4′ x 9′ x 30′
	201′-4	4′ x 9′ x 32′
	213′-10 226′-4 243′-0	4′ x 10′ x 32′

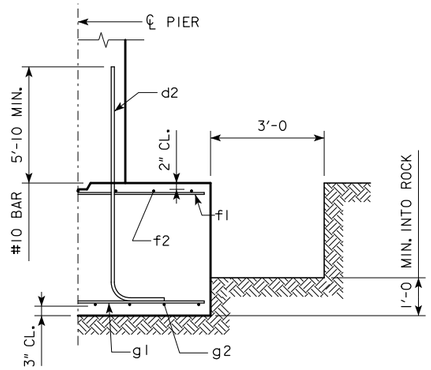

TYPICAL SECTION

NOTE: THE REINFORCING STEEL QUANTITY IS TO BE INCLUDED ON THE SUMMARY QUANTITIES SHEET IN THE PLAN.

NOTE: THE CONCRETE QUANTITY IS TO BE INCLUDED ON THE SUMMARY QUANTITIES SHEET IN THE PLAN.

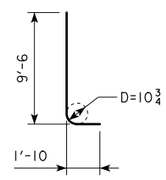

d2

NOTE: D = PIN DIAMETER.
DIMENSIONS ARE OUT TO OUT.

FOOTING SIZE	REINFORCING STEEL (ONE FOOTING)					STRUCTURAL CONCRETE (CY)
	BAR	NO., SIZE & SPACING	LENGTH	WEIGHT (LB.)	TOTAL WEIGHT (LB.)	
4′ x 9′ x 26′	d2	48 - #10 AS SHOWN	11′-4	2341	3640	34.7
	f1	26 - #5 @ 1′-0	8′-8	235		
	f2	9 - #5 @ 1′-0	25′-8	241		
	g1	27 - #6 @ 0′-11½	8′-8	351		
	g2	9 - #7 @ 1′-0	25′-8	472		
4′ x 9′ x 28′	d2	48 - #10 AS SHOWN	11′-4	2341	4058	37.3
	f1	28 - #5 @ 1′-0	8′-8	253		
	f2	9 - #5 @ 1′-0	27′-8	260		
	g1	30 - #6 @ 0′-11	8′-8	391		
	g2	11 - #8 @ 0′-10	27′-8	813		
4′ x 9′ x 30′	d2	48 - #10 AS SHOWN	11′-4	2341	4724	40.0
	f1	30 - #5 @ 1′-0	8′-8	271		
	f2	9 - #5 @ 1′-0	29′-8	278		
	g1	33 - #6 @ 0′-11	8′-8	430		
	g2	11 - #10 @ 0′-10	29′-8	1404		
4′ x 9′ x 32′	d2	48 - #10 AS SHOWN	11′-4	2341	5265	42.7
	f1	32 - #5 @ 1′-0	8′-8	289		
	f2	9 - #5 @ 1′-0	31′-8	297		
	g1	32 - #7 @ 1′-0	8′-8	567		
	g2	13 - #10 @ 0′-8½	31′-8	1771		
4′ x 10′ x 32′	d2	48 - #10 AS SHOWN	11′-4	2341	5594	47.4
	f1	32 - #5 @ 1′-0	9′-8	323		
	f2	10 - #5 @ 1′-0	31′-8	330		
	g1	35 - #7 @ 0′-11	9′-8	692		
	g2	14 - #10 @ 0′-8½	31′-8	1908		

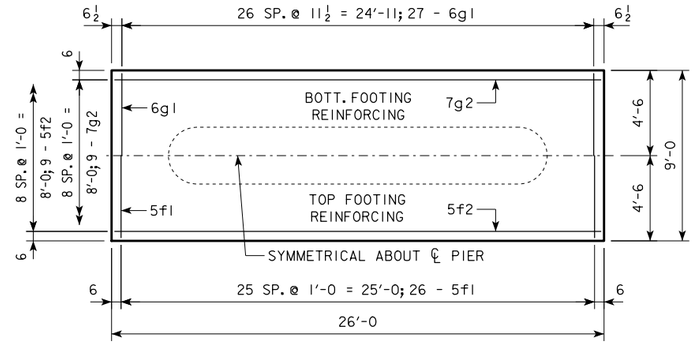

4′-0 x 9′-0 x 26′-0

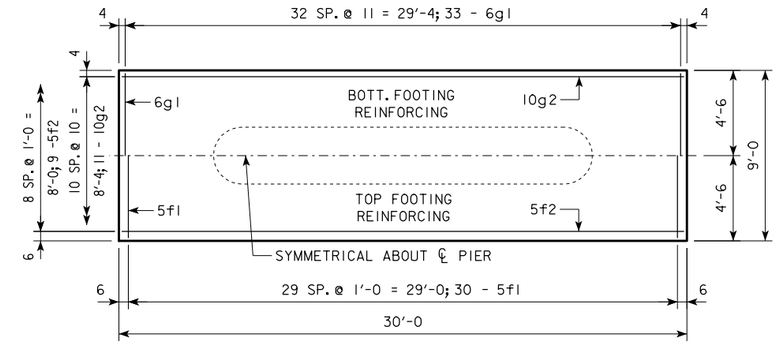

4′-0 x 9′-0 x 30′-0

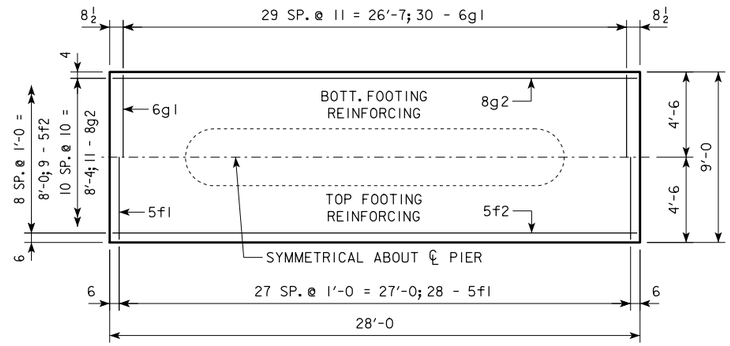

4′-0 x 9′-0 x 28′-0

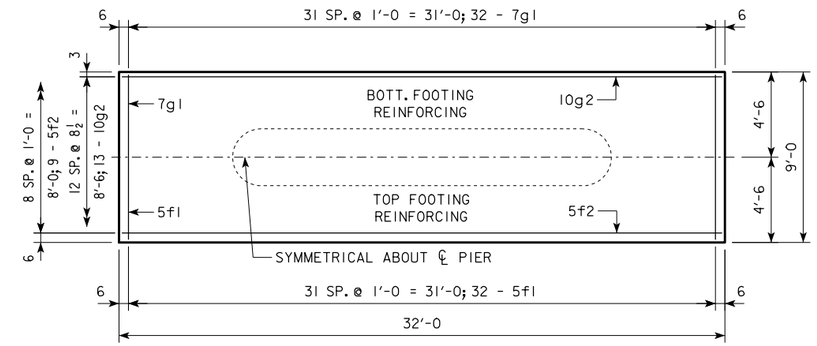

4′-0 x 9′-0 x 32′-0

FOOTING NOTES:

THESE SPREAD FOOTINGS ARE DESIGNED AND DETAILED TO BE USED WITH THE CAP AND COLUMN DETAILS OF THE TEE PIERS AS SHOWN ON SHEET H40-73-14.

THESE SPREAD FOOTINGS SHALL EXTEND AT LEAST 12 INCHES INTO SUITABLE FOUNDATION ROCK AND THE LAST 12 INCHES OF ROCK EXCAVATION SHALL BE TO NEAT LINES OF MASONRY. THE FOUNDATION ROCK SHALL HAVE A MINIMUM LRFD NOMINAL BEARING RESISTANCE OF 30 KIPS PER SQUARE FOOT (ALLOWABLE SERVICE LOAD BEARING VALUE OF AT LEAST 10 KIPS PER SQUARE FOOT).

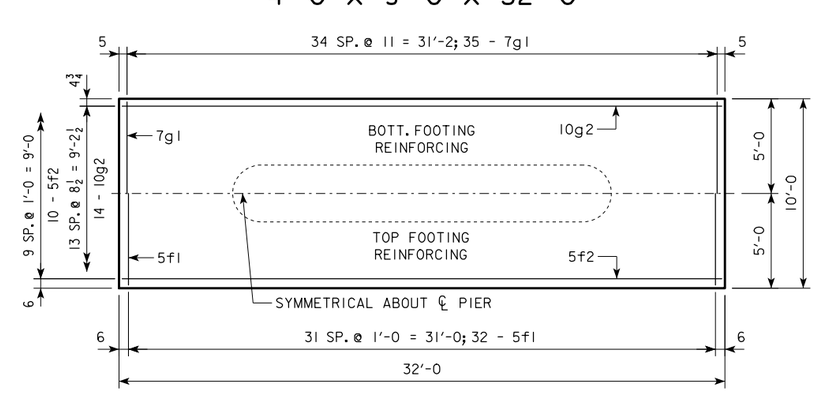

4′-0 x 10′-0 x 32′-0

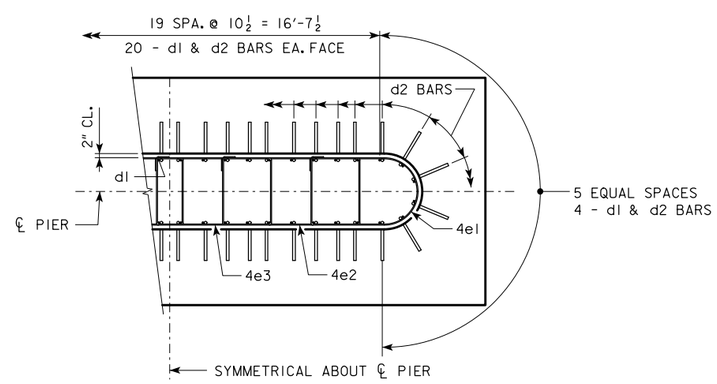

d2 LAYOUT
(SEE SECTION A-A ON SHEET H40-73-14.)

LATEST REVISION DATE

APPROVED BY BRIDGE ENGINEER

IOWA DOT Highway Division

STANDARD DESIGN - 40′ ROADWAY, THREE SPAN BRIDGE

PRETENSIONED PRESTRESSED CONCRETE BEAM BRIDGES

SEPTEMBER, 2014

TEE PIER - SPREAD FOOTINGS

30° SKEW - H=25′ TO 40′

H40-80-14

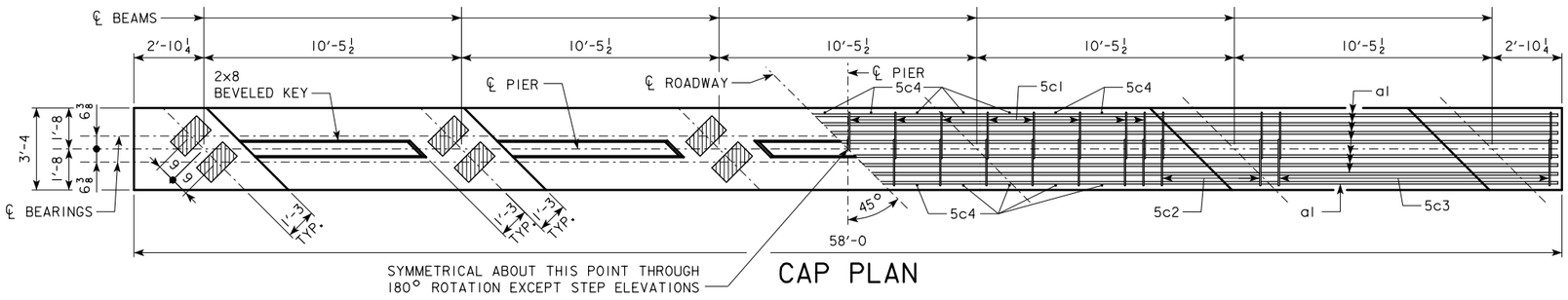

CAP PLAN

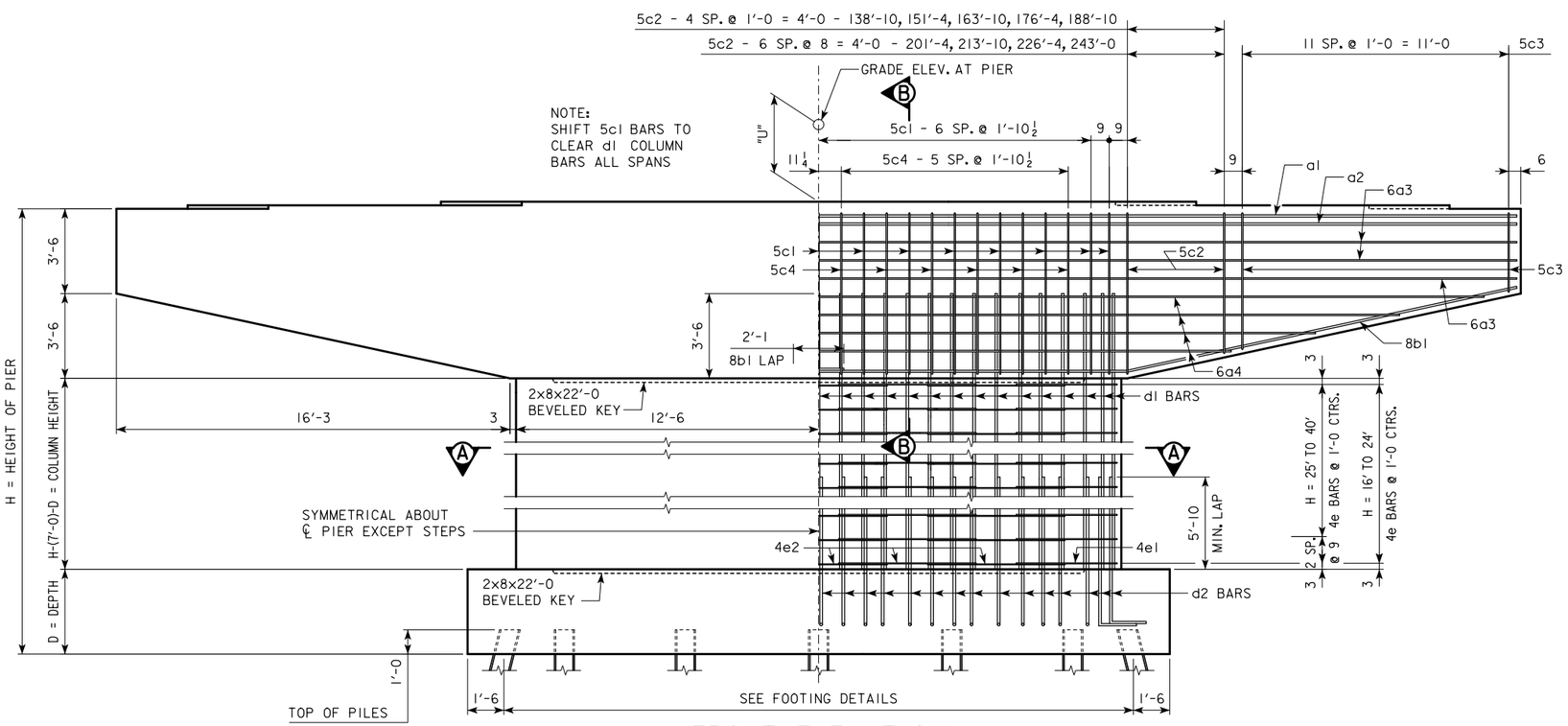

FRONT ELEVATION

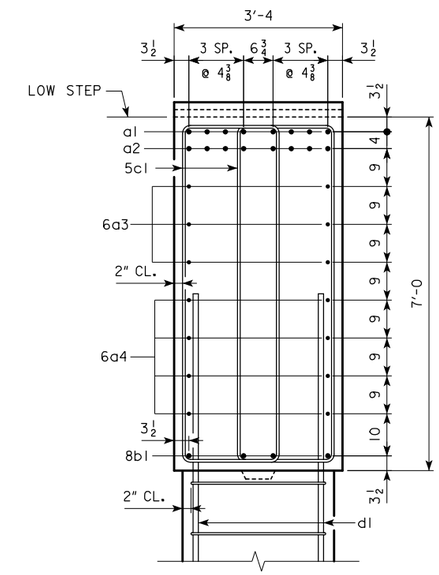

SECTION B-B

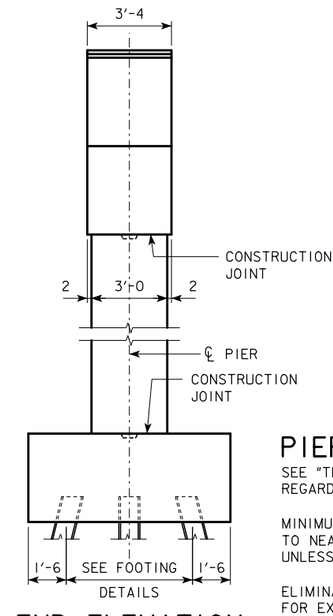

END ELEVATION

PIER NOTES:

SEE "TEE PIER NOTES" ON H40-02-14 FOR NOTES REGARDING APPLICATION OF THESE PIER STANDARDS.

MINIMUM CLEAR DISTANCE FROM FACE OF CONCRETE TO NEAR REINFORCING BAR SHALL BE 2 INCHES UNLESS OTHERWISE NOTED OR SHOWN.

ELIMINATE 2x8 BEVELED KEYWAY ON TOP OF CAP FOR EXPANSION PIERS.

FOR SIZE OF BEARING PADS, SEE H40-44-14.

SEE SHEET H40-29-14 FOR "U" DIMENSION.

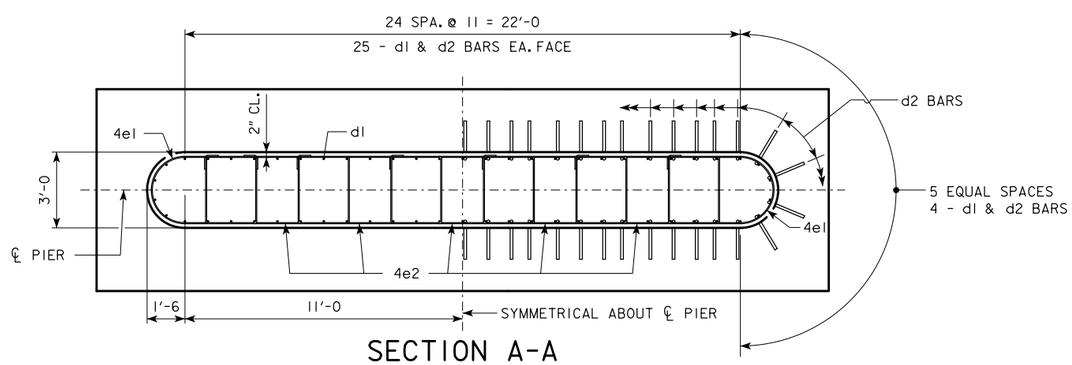

SECTION A-A

LATEST REVISION DATE

APPROVED BY BRIDGE ENGINEER

IOWA DOT Highway Division

STANDARD DESIGN - 40' ROADWAY, THREE SPAN BRIDGE

PRETENSIONED PRESTRESSED CONCRETE BEAM BRIDGES

SEPTEMBER, 2014

TEE PIER CAP AND COLUMN

45° SKEW

H40-81-14

BENT BAR DETAILS

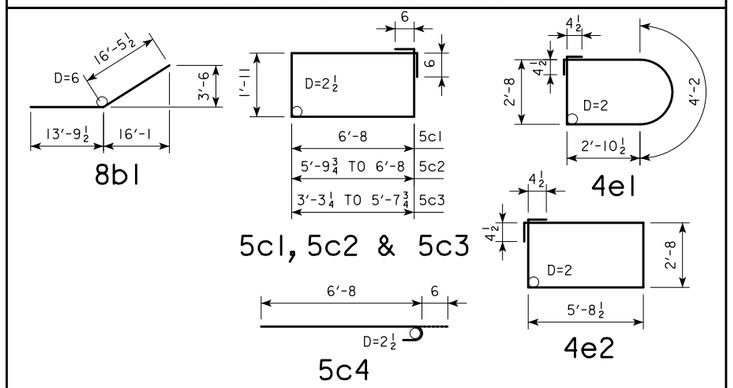

NOTE: ALL DIMENSIONS ARE OUT TO OUT.
D = PIN DIAMETER.

CAP

REINFORCING STEEL	℄ - ℄ ABUT. BEARINGS		138'-10			151'-4			163'-10			176'-4			188'-10			201'-4			213'-10			226'-4			243'-0		
BAR	LENGTH	SHAPE	NO.	SIZE	WEIGHT	NO.	SIZE	WEIGHT	NO.	SIZE	WEIGHT	NO.	SIZE	WEIGHT	NO.	SIZE	WEIGHT	NO.	SIZE	WEIGHT	NO.	SIZE	WEIGHT	NO.	SIZE	WEIGHT	NO.	SIZE	WEIGHT
a1	57'-8		8	9	1569	8	9	1569	8	9	1569	8	9	1569	8	9	1569	8	10	1985	8	10	1985	8	11	2451	8	11	2451
a2	57'-8		8	8	1232	8	9	1569	8	9	1569	8	9	1569	8	9	1569	8	10	1985	8	10	1985	8	10	1985	8	10	1985
6a3	57'-8		6	6	520	6	6	520	6	6	520	6	6	520	6	6	520	6	6	520	6	6	520	6	6	520	6	6	520
6a4	VARIES		8	6	538	8	6	538	8	6	538	8	6	538	8	6	538	8	6	538	8	6	538	8	6	538	8	6	538
8b1	30'-3		8	8	646	8	8	646	8	8	646	8	8	646	8	8	646	8	8	646	8	8	646	8	8	646	8	8	646
5c1	18'-2		30	5	568	30	5	568	30	5	568	30	5	568	30	5	568	30	5	568	30	5	568	30	5	568	30	5	568
5c2	VARIES		20	5	361	20	5	361	20	5	361	20	5	361	20	5	361	28	5	506	28	5	506	28	5	506	28	5	506
5c3	VARIES		48	5	688	48	5	688	48	5	688	48	5	688	48	5	688	48	5	688	48	5	688	48	5	688	48	5	688
5c4	7'-2		24	5	179	24	5	179	24	5	179	24	5	179	24	5	179	24	5	179	24	5	179	24	5	179	24	5	179
① TOTAL (LB.)			6301			6638			6638			7054			7054			7615			7615			8081			8081		
STRUCTURAL CONCRETE (CY)			44.9			44.9			44.9			44.9			44.9			44.9			44.9			44.9			44.9		

COLUMN

H IN FEET	COLUMN HEIGHT	STRUCTURAL CONCRETE (CY)	REINFORCING STEEL: d1 BAR				4e1 BAR				4e2 BAR				TOTAL WEIGHT (LB.)
			NO.	SIZE	LENGTH	WEIGHT	NO.	SIZE	LENGTH	WEIGHT	NO.	SIZE	LENGTH	WEIGHT	
16	5'-6	14.9	58	10	9'-0	2246	12	4	13'-4	107	30	4	17'-6	351	2704
17	6'-6	17.6	58	10	10'-0	2496	14	4	13'-4	125	35	4	17'-6	409	3030
18	7'-6	20.3	58	10	11'-0	2745	16	4	13'-4	143	40	4	17'-6	468	3356
19	8'-6	23.0	58	10	12'-0	2995	18	4	13'-4	160	45	4	17'-6	526	3681
20	9'-6	25.7	58	10	13'-0	3244	20	4	13'-4	178	50	4	17'-6	585	4007
21	10'-6	28.4	58	10	14'-0	3494	22	4	13'-4	196	55	4	17'-6	643	4333
22	11'-6	31.1	58	10	15'-0	3744	24	4	13'-4	214	60	4	17'-6	701	4659
23	12'-6	33.8	58	10	16'-0	3993	26	4	13'-4	232	65	4	17'-6	760	4985
24	13'-6	36.5	58	10	17'-0	4243	28	4	13'-4	249	70	4	17'-6	818	5310
25	14'-0	37.9	58	10	17'-6	4368	30	4	13'-4	267	75	4	17'-6	877	5512
26	15'-0	40.6	58	10	18'-6	4617	32	4	13'-4	285	80	4	17'-6	935	5837
27	16'-0	43.3	58	10	19'-6	4867	34	4	13'-4	303	85	4	17'-6	994	6164
28	17'-0	46.0	58	10	20'-6	5116	36	4	13'-4	321	90	4	17'-6	1052	6489
29	18'-0	48.7	58	10	21'-6	5366	38	4	13'-4	338	95	4	17'-6	1111	6815
30	19'-0	51.4	58	10	22'-6	5615	40	4	13'-4	356	100	4	17'-6	1169	7140
31	20'-0	54.1	58	10	23'-6	5865	42	4	13'-4	374	105	4	17'-6	1227	7466
32	21'-0	56.8	58	10	24'-6	6115	44	4	13'-4	392	110	4	17'-6	1286	7793
33	22'-0	59.5	58	10	25'-6	6364	46	4	13'-4	410	115	4	17'-6	1344	8118
34	23'-0	62.2	58	10	26'-6	6614	48	4	13'-4	428	120	4	17'-6	1403	8445
35	24'-0	64.9	58	10	27'-6	6863	50	4	13'-4	445	125	4	17'-6	1461	8769
36	25'-0	67.7	58	10	28'-6	7113	52	4	13'-4	463	130	4	17'-6	1520	9096
37	26'-0	70.4	58	10	29'-6	7362	54	4	13'-4	481	135	4	17'-6	1578	9421
38	27'-0	73.1	58	10	30'-6	7612	56	4	13'-4	499	140	4	17'-6	1637	9748
39	28'-0	75.8	58	10	31'-6	7862	58	4	13'-4	517	145	4	17'-6	1695	10074
40	29'-0	78.5	58	10	32'-6	8111	60	4	13'-4	534	150	4	17'-6	1754	10399

NOTE: THE REINFORCING STEEL QUANTITIES FOR THE CAP AND COLUMN ARE TO BE INCLUDED ON THE SUMMARY QUANTITIES SHEET IN THE PLAN.

NOTE: THE CONCRETE QUANTITIES FOR THE CAP AND COLUMN COLUMN ARE TO BE INCLUDED ON THE SUMMARY QUANTITIES SHEET IN THE PLAN.

① SEE SHEET H40-31-14 FOR STEP REINFORCING STEEL QUANTITIES AND DETAILS.

LATEST REVISION DATE

APPROVED BY BRIDGE ENGINEER

IOWA DOT Highway Division

STANDARD DESIGN - 40' ROADWAY, THREE SPAN BRIDGE

PRETENSIONED PRESTRESSED CONCRETE BEAM BRIDGES

SEPTEMBER, 2014

TEE PIER CAP AND COLUMN

45° SKEW

H40-82-14

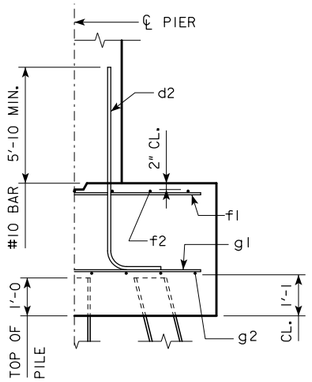

TYPICAL SECTION

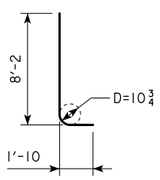

d2

NOTE: D = PIN DIAMETER.
DIMENSIONS ARE OUT TO OUT.

NOTE: THE REINFORCING STEEL QUANTITY IS TO BE INCLUDED ON THE SUMMARY QUANTITIES SHEET IN THE PLAN.

NOTE: THE CONCRETE QUANTITY IS TO BE INCLUDED ON THE SUMMARY QUANTITIES SHEET IN THE PLAN.

NOTE: THE PILE TYPE IS TO BE INCLUDED ON THE SUMMARY QUANTITIES SHEET IN THE PLAN.

H IN FT.	℄ - ℄ ABUT. BRG.	PILING (HP10x57) NO. & LAYOUT	PILING (HP10x57) ① LRFD PU, STRENGTH I DES. LOAD (KIPS)	FOOTING SIZE
16 TO 18	201'-4	21A	145	3'-6 x 8' x 31'
	213'-10	22A	141	
	226'-4	23A	144	
	243'-0	24A	143	
19 TO 21	201'-4	22A	140	3'-6 x 8' x 31'
	213'-10	22A	145	
	226'-4	24A	142	
	243'-0	25A	144	
22 TO 24	201'-4	22A	144	3'-6 x 8' x 31'
	213'-10	23A	145	
	226'-4	24A	145	
	243'-0	26A	143	

FOOTING SIZE	REINFORCING STEEL (ONE FOOTING) BAR	NO., SIZE & SPACING	LENGTH	WEIGHT (LB.)	TOTAL WEIGHT (LB.)	STRUCTURAL CONCRETE (CY)
3'-6 x 8' x 31'	d2	58 - #10 AS SHOWN	10'-0	2496	4269	32.1
	f1	31 - #5 @ 1'-0	7'-8	248		
	f2	8 - #5 @ 1'-0	30'-8	256		
	g1	32 - #6 @ 0'-11½	7'-8	368		
	g2	11 - #8 @ 0'-9	30'-8	901		

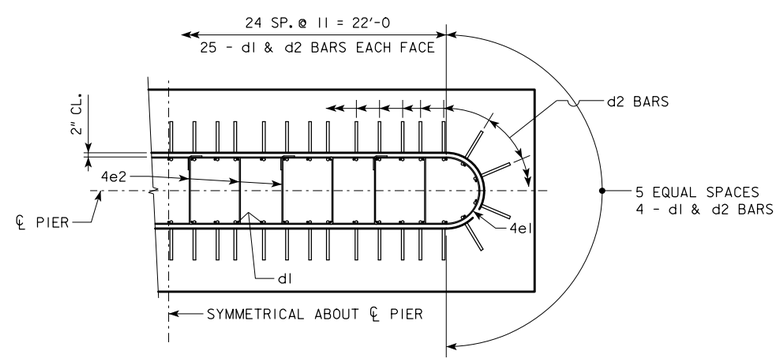

d2 LAYOUT
(SEE SECTION A-A ON SHEET H40-81-14.)

① NOTE: PU, STRENGTH I DESIGN LOAD (KIPS) IS NOT THE VALUE USED IN THE FIELD FOR DRIVING PILES.

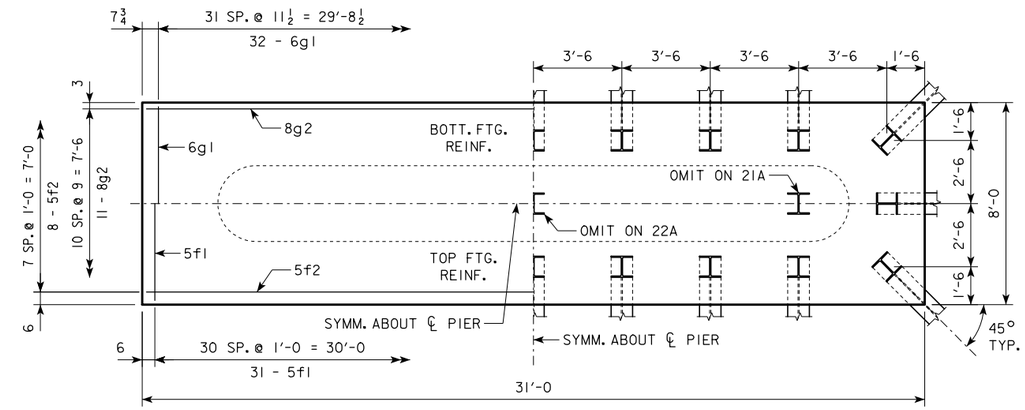

3'-6 x 8'-0 x 31'-0 FOR 21A, 22A & 23A

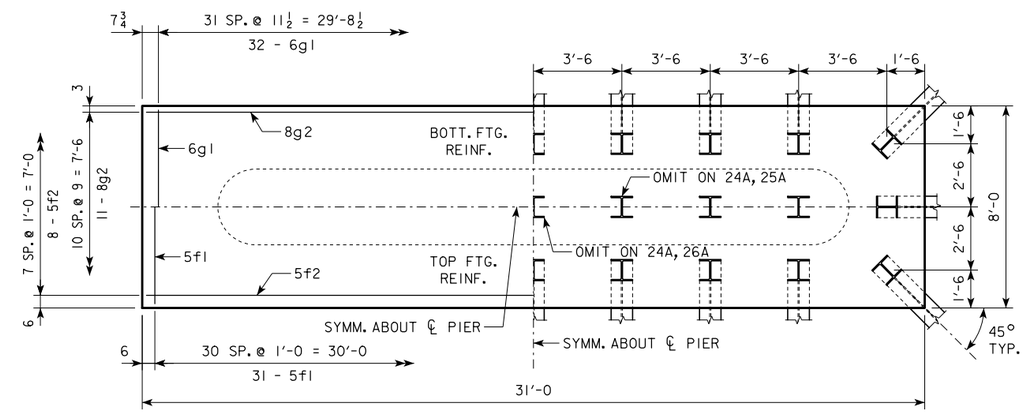

3'-6 x 8'-0 x 31'-0 FOR 24A, 25A & 26A

FOOTING NOTES:

THESE FOOTINGS ARE DESIGNED AND DETAILED TO BE USED WITH THE CAP AND COLUMN DETAILS OF THE TEE PIERS AS SHOWN ON SHEET H40-81-14.

BATTER PILES IN EXTERIOR ROWS 1:4 IN THE DIRECTION SHOWN.

STEEL PILING USED AS POINT BEARING SHALL HAVE A MINIMUM DISTANCE OF APPROXIMATELY 10 FEET FROM BOTTOM OF FOOTING TO TOP OF BEARING ROCK. THE PILE LAYOUTS ARE SUCH THAT THE DISTANCE CENTER TO CENTER OF ADJACENT PILING SHALL NOT EXCEED 8'-0.

PIER PILES SHALL BE DRIVEN TO VALUES SHOWN IN DESIGN PLANS.

LATEST REVISION DATE

APPROVED BY BRIDGE ENGINEER

IOWA DOT Highway Division

STANDARD DESIGN - 40' ROADWAY, THREE SPAN BRIDGE

PRETENSIONED PRESTRESSED CONCRETE BEAM BRIDGES

SEPTEMBER, 2014

TEE PIER-HP10x57 SRL-I STEEL PILE FOOTINGS

45° SKEW - H=16' TO 24'

H40-83-14

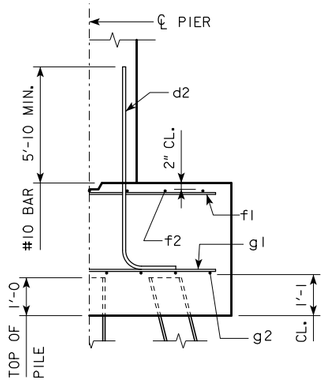

TYPICAL SECTION

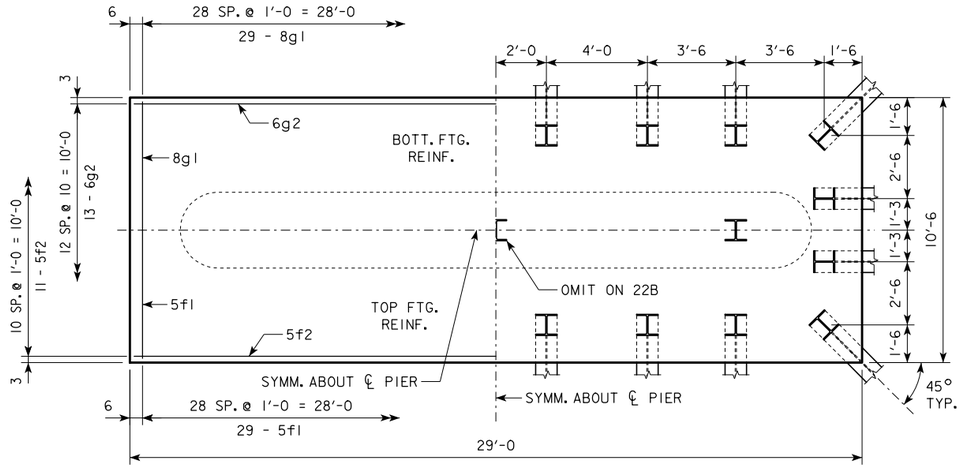

4'-0 x 10'-6 x 29'-0 FOR 22B & 23B

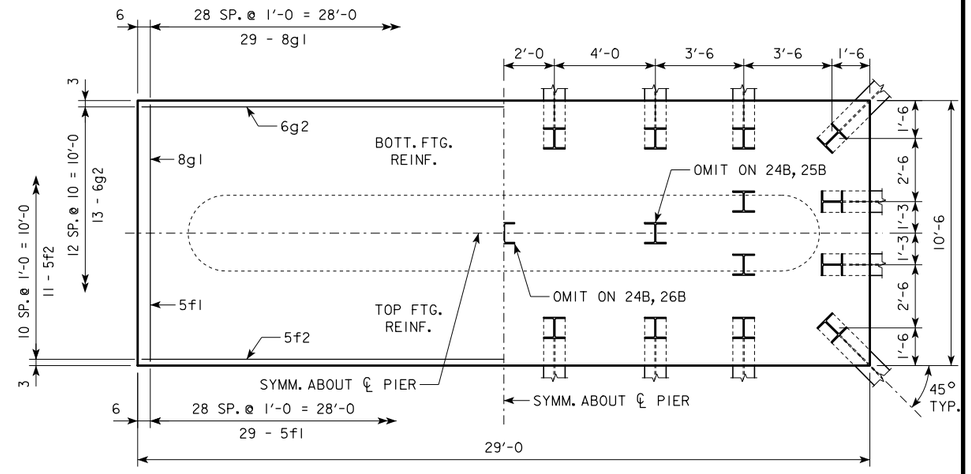

4'-0 x 10'-6 x 29'-0 FOR 24B, 25B & 26B

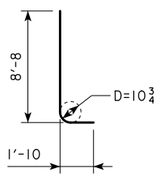

d2

NOTE: D = PIN DIAMETER.
DIMENSIONS ARE OUT TO OUT.

NOTE: THE REINFORCING STEEL QUANTITY IS TO BE INCLUDED ON THE SUMMARY QUANTITIES SHEET IN THE PLAN.

NOTE: THE CONCRETE QUANTITY IS TO BE INCLUDED ON THE SUMMARY QUANTITIES SHEET IN THE PLAN.

NOTE: THE PILE TYPE IS TO BE INCLUDED ON THE SUMMARY QUANTITIES SHEET IN THE PLAN.

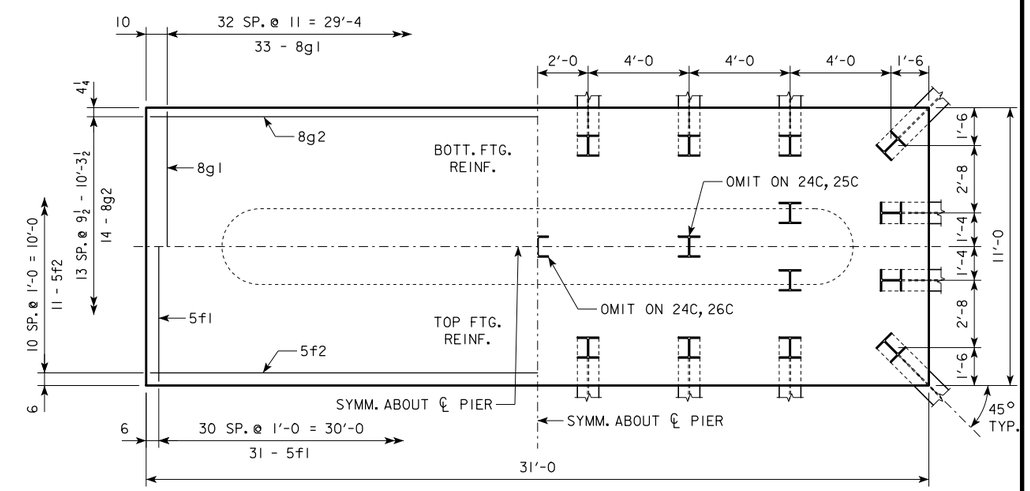

4'-0 x 11'-0 x 31'-0 FOR 24C, 25C, 26C & 27A

H IN FT.	℄ - ℄ ABUT. BRG.	PILING (HP10x57) NO. & LAYOUT	PILING (HP10x57) ① LRFD PU, STRENGTH I DES. LOAD (KIPS)	FOOTING SIZE
25 TO 27	201'-4	22B	143	4' x 10'-6 x 29'
	213'-10	23B	144	
	226'-4	24B	142	
	243'-0	25B	144	
28 TO 30	201'-4	22B	147	4' x 10'-6 x 29'
	213'-10	24B	140	
	226'-4	24B	145	
	243'-0	25B	147	
31 TO 33	201'-4	23B	145	4' x 10'-6 x 29'
	213'-10	24B	142	
	226'-4	25B	144	
	243'-0	26B	144	
34 TO 36	201'-4	24C	139	4' x 11' x 31'
	213'-10	24C	144	
	226'-4	25C	145	
	243'-0	26C	145	
37 TO 40	201'-4	24C	143	4' x 11' x 31'
	213'-10	25C	143	
	226'-4	26C	144	
	243'-0	27A	145	

① NOTE: PU, STRENGTH I DESIGN LOAD (KIPS) IS NOT THE VALUE USED IN THE FIELD FOR DRIVING PILES.

FOOTING NOTES:

THESE FOOTINGS ARE DESIGNED AND DETAILED TO BE USED WITH THE CAP AND COLUMN DETAILS OF THE TEE PIERS AS SHOWN ON SHEET H40-81-14.

BATTER PILES IN EXTERIOR ROWS 1:4 IN THE DIRECTION SHOWN.

STEEL PILING USED AS POINT BEARING SHALL HAVE A MINIMUM DISTANCE OF APPROXIMATELY 10 FEET FROM BOTTOM OF FOOTING TO TOP OF BEARING ROCK. THE PILE LAYOUTS ARE SUCH THAT THE DISTANCE CENTER TO CENTER OF ADJACENT PILING SHALL NOT EXCEED 8'-0.

PIER PILES SHALL BE DRIVEN TO VALUES SHOWN IN DESIGN PLANS.

FOOTING SIZE	REINFORCING STEEL (ONE FOOTING) BAR	NO., SIZE & SPACING	LENGTH	WEIGHT (LB.)	TOTAL WEIGHT (LB.)	STRUCTURAL CONCRETE (CY)
4' x 10'-6 x 29'	d2	58 - #10 AS SHOWN	10'-6	2621	4605	45.1
	f1	29 - #5 @ 1'-0	10'-2	308		
	f2	11 - #5 @ 1'-0	28'-8	329		
	g1	29 - #8 @ 1'-0	10'-2	787		
	g2	13 - #6 @ 0'-10	28'-8	560		
4' x 11' x 31'	d2	58 - #10 AS SHOWN	10'-6	2621	5404	50.5
	f1	31 - #5 @ 1'-0	10'-8	345		
	f2	11 - #5 @ 1'-0	30'-8	352		
	g1	33 - #8 @ 0'-11	10'-8	940		
	g2	14 - #8 @ 0'-9½	30'-8	1146		

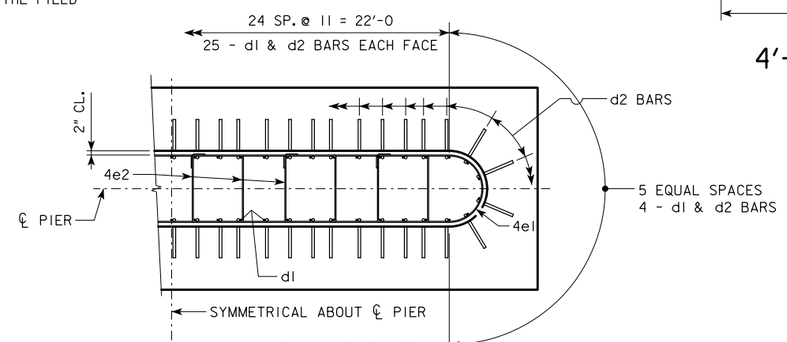

d2 LAYOUT
(SEE SECTION A-A ON SHEET H40-81-14.)

LATEST REVISION DATE

APPROVED BY BRIDGE ENGINEER

IOWA DOT Highway Division

STANDARD DESIGN - 40' ROADWAY, THREE SPAN BRIDGE

PRETENSIONED PRESTRESSED CONCRETE BEAM BRIDGES

SEPTEMBER, 2014

TEE PIER-HP10x57 SRL-1 STEEL PILE FOOTINGS

45° SKEW - H=25' TO 40'

H40-84-14

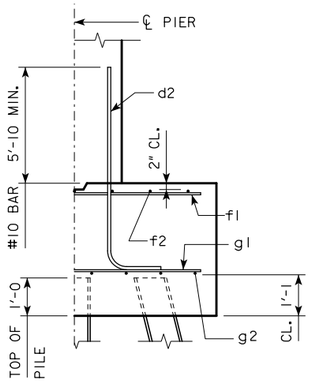

TYPICAL SECTION

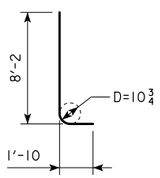

d2

NOTE: D = PIN DIAMETER.
DIMENSIONS ARE OUT TO OUT.

NOTE: THE REINFORCING STEEL QUANTITY IS TO BE INCLUDED ON THE SUMMARY QUANTITIES SHEET IN THE PLAN.

NOTE: THE CONCRETE QUANTITY IS TO BE INCLUDED ON THE SUMMARY QUANTITIES SHEET IN THE PLAN.

NOTE: THE PILE TYPE IS TO BE INCLUDED ON THE SUMMARY QUANTITIES SHEET IN THE PLAN.

H IN FT.	℄ - ℄ ABUT. BRG.	PILING (HP10x57) NO. & LAYOUT	(1) LRFD PU, STRENGTH I DES. LOAD (KIPS)	FOOTING SIZE
16 TO 18	201'-4	14A	209	3'-6 x 8' x 29'
	213'-10	14A	216	
	226'-4	15A	216	
	243'-0	16A	212	
19 TO 21	201'-4	14A	215	3'-6 x 8' x 29'
	213'-10	15A	213	
	226'-4	16A	210	
	243'-0	16A	218	
22 TO 24	201'-4	15A	212	3'-6 x 8' x 29'
	213'-10	15A	219	
	226'-4	16A	215	
	243'-0	17A	215	

FOOTING SIZE	REINFORCING STEEL (ONE FOOTING) BAR	NO., SIZE & SPACING	LENGTH	WEIGHT (LB.)	TOTAL WEIGHT (LB.)	STRUCTURAL CONCRETE (CY)
3'-6 x 8' x 29'	d2	58 - #10 AS SHOWN	10'-0	2496	4063	30.1
	f1	29 - #5 @ 1'-0	7'-8	232		
	f2	8 - #5 @ 1'-0	28'-8	239		
	g1	29 - #6 @ 1'-0	7'-8	334		
	g2	13 - #7 @ 0'-7½	28'-8	762		

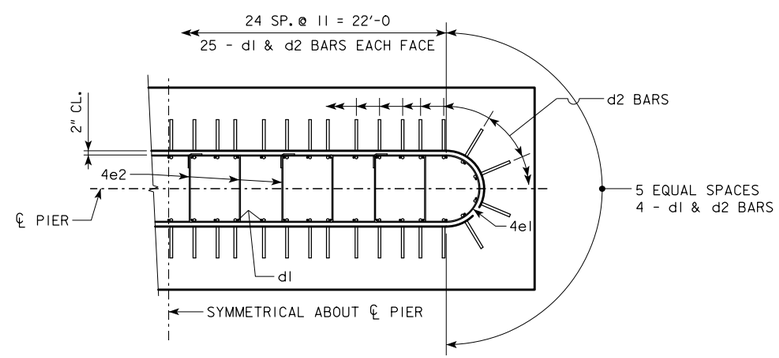

d2 LAYOUT
(SEE SECTION A-A ON SHEET H40-81-14.)

(1) NOTE: PU, STRENGTH I DESIGN LOAD (KIPS) IS NOT THE VALUE USED IN THE FIELD FOR DRIVING PILES.

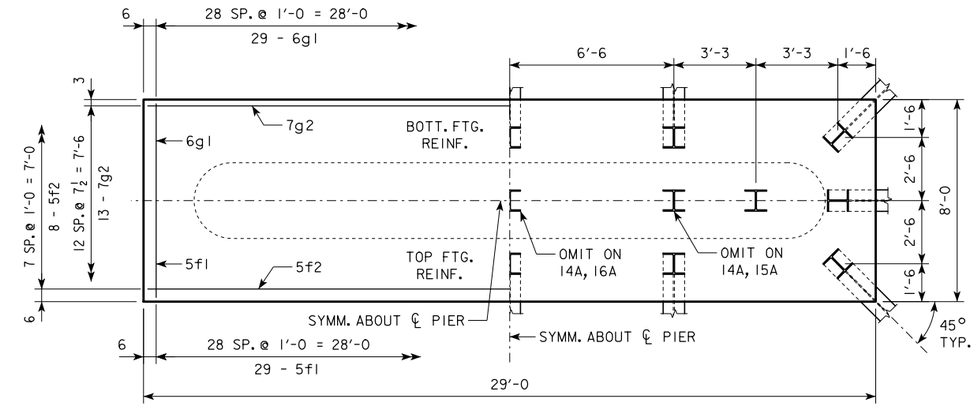

3'-6 x 8'-0 x 29'-0 FOR 14A, 15A, 16A & 17A

FOOTING NOTES:

THESE FOOTINGS ARE DESIGNED AND DETAILED TO BE USED WITH THE CAP AND COLUMN DETAILS OF THE TEE PIERS AS SHOWN ON SHEET H40-81-14.

BATTER PILES IN EXTERIOR ROWS 1:4 IN THE DIRECTION SHOWN.

STEEL PILING USED AS POINT BEARING SHALL HAVE A MINIMUM DISTANCE OF APPROXIMATELY 10 FEET FROM BOTTOM OF FOOTING TO TOP OF BEARING ROCK. THE PILE LAYOUTS ARE SUCH THAT THE DISTANCE CENTER TO CENTER OF ADJACENT PILING SHALL NOT EXCEED 8'-0.

PIER PILES SHALL BE DRIVEN TO VALUES SHOWN IN DESIGN PLANS.

LATEST REVISION DATE

APPROVED BY BRIDGE ENGINEER

IOWADOT Highway Division

STANDARD DESIGN - 40' ROADWAY, THREE SPAN BRIDGE

PRETENSIONED PRESTRESSED CONCRETE BEAM BRIDGES

SEPTEMBER, 2014

TEE PIER-HP10x57 SRL-2 STEEL PILE FOOTINGS

45° SKEW - H=16' TO 24'

H40-85-14

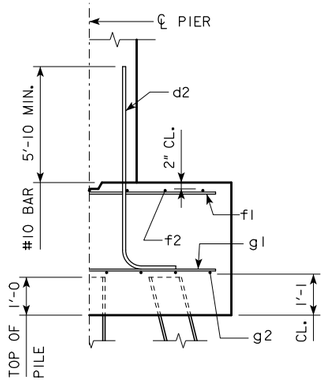

TYPICAL SECTION

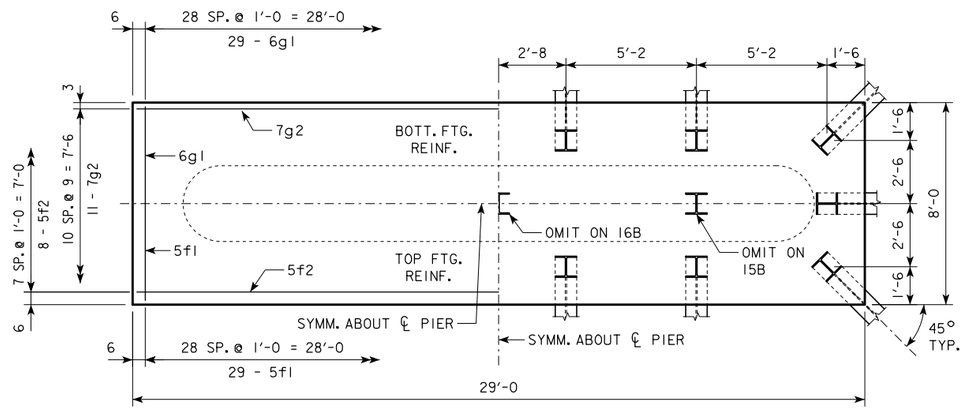

4'-0 x 8'-0 x 29'-0 FOR 15B, 16B & 17B

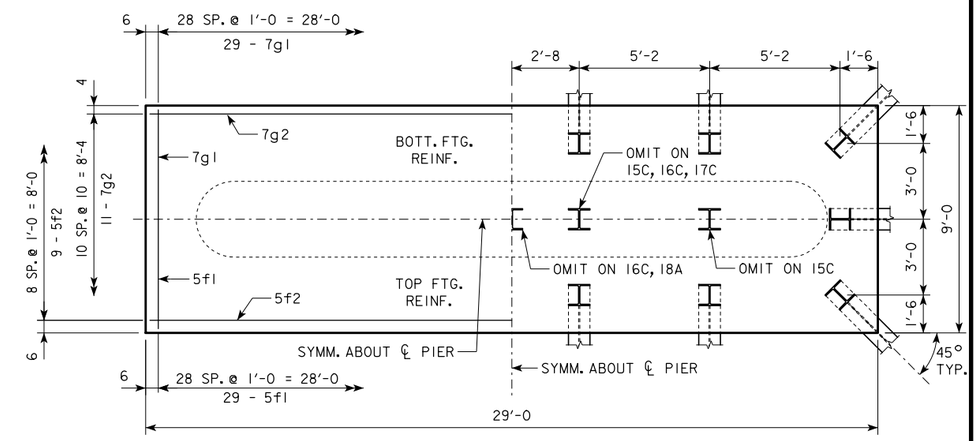

4'-0 x 9'-0 x 29'-0 FOR 15C, 16C, 17C & 18A

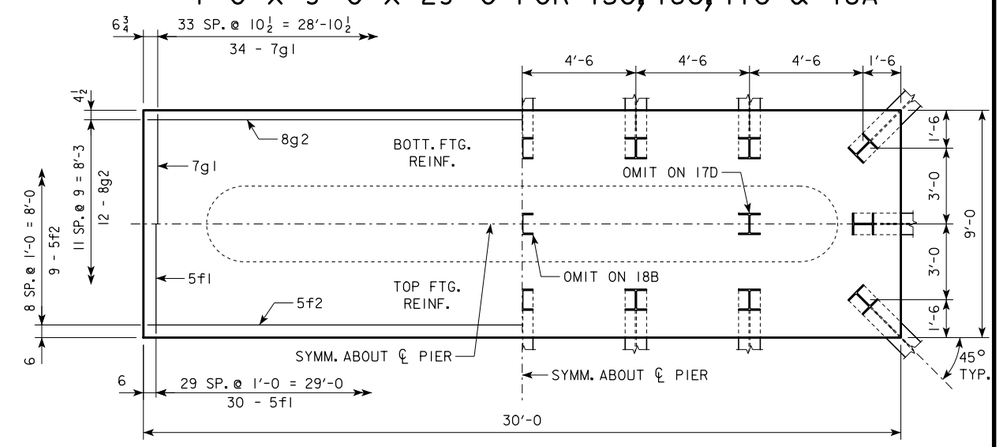

4'-0 x 9'-0 x 30'-0 FOR 17D & 18B

NOTE: THE REINFORCING STEEL QUANTITY IS TO BE INCLUDED ON THE SUMMARY QUANTITIES SHEET IN THE PLAN.

NOTE: THE CONCRETE QUANTITY IS TO BE INCLUDED ON THE SUMMARY QUANTITIES SHEET IN THE PLAN.

NOTE: THE PILE TYPE IS TO BE INCLUDED ON THE SUMMARY QUANTITIES SHEET IN THE PLAN.

H IN FT.	℄ - ℄ ABUT. BRG.	PILING (HP10x57) NO. & LAYOUT	PILING (HP10x57) (1) LRFD PU, STRENGTH I DES. LOAD (KIPS)	FOOTING SIZE
25 TO 27	201'-4	15B	217	4' x 8' x 29'
	213'-10	16B	210	
	226'-4	16B	219	
	243'-0	17B	219	
28 TO 30	201'-4	16C	206	4' x 9' x 29'
	213'-10	16C	213	
	226'-4	17C	213	
	243'-0	18A	213	
31 TO 33	201'-4	16C	210	4' x 9' x 29'
	213'-10	16C	217	
	226'-4	17C	218	
	243'-0	18A	217	
34 TO 36	201'-4	17D	203	4' x 9' x 30'
	213'-10	17D	209	
	226'-4	17D	218	
	243'-0	18B	211	
37 TO 40	201'-4	17D	208	4' x 9' x 30'
	213'-10	17D	215	
	226'-4	18B	211	
	243'-0	18B	217	

(1) NOTE: PU, STRENGTH I DESIGN LOAD (KIPS) IS NOT THE VALUE USED IN THE FIELD FOR DRIVING PILES.

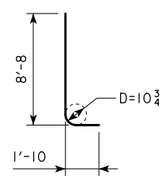

d2

NOTE: D = PIN DIAMETER. DIMENSIONS ARE OUT TO OUT.

FOOTING SIZE	REINFORCING STEEL (ONE FOOTING) BAR	NO., SIZE & SPACING	LENGTH	WEIGHT (LB.)	TOTAL WEIGHT (LB.)	STRUCTURAL CONCRETE (CY)
4' x 8' x 29'	d2	58 - #10 AS SHOWN	10'-6	2621	4071	34.4
	f1	29 - #5 @ 1'-0	7'-8	232		
	f2	8 - #5 @ 1'-0	28'-8	239		
	g1	29 - #6 @ 1'-0	7'-8	334		
	g2	11 - #7 @ 0'-9	28'-8	645		
4' x 9' x 29'	d2	58 - #10 AS SHOWN	10'-6	2621	4311	38.7
	f1	29 - #5 @ 1'-0	8'-8	262		
	f2	9 - #5 @ 1'-0	28'-8	269		
	g1	29 - #7 @ 1'-0	8'-8	514		
	g2	11 - #7 @ 0'-10	28'-8	645		
4' x 9' x 30'	d2	58 - #10 AS SHOWN	10'-6	2621	4723	40.0
	f1	30 - #5 @ 1'-0	8'-8	271		
	f2	9 - #5 @ 1'-0	29'-8	278		
	g1	34 - #7 @ 0'-10½	8'-8	602		
	g2	12 - #8 @ 0'-9	29'-8	951		

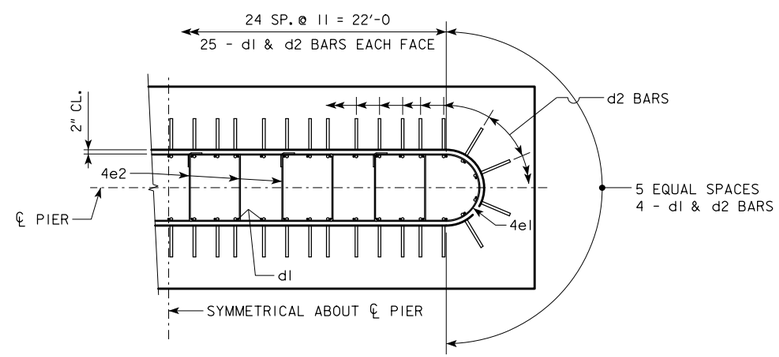

d2 LAYOUT

(SEE SECTION A-A ON SHEET H40-81-14.)

FOOTING NOTES:

THESE FOOTINGS ARE DESIGNED AND DETAILED TO BE USED WITH THE CAP AND COLUMN DETAILS OF THE TEE PIERS AS SHOWN ON SHEET H40-81-14.

BATTER PILES IN EXTERIOR ROWS 1:4 IN THE DIRECTION SHOWN.

STEEL PILING USED AS POINT BEARING SHALL HAVE A MINIMUM DISTANCE OF APPROXIMATELY 10 FEET FROM BOTTOM OF FOOTING TO TOP OF BEARING ROCK. THE PILE LAYOUTS ARE SUCH THAT THE DISTANCE CENTER TO CENTER OF ADJACENT PILING SHALL NOT EXCEED 8'-0.

PIER PILES SHALL BE DRIVEN TO VALUES SHOWN IN DESIGN PLANS.

LATEST REVISION DATE

APPROVED BY BRIDGE ENGINEER

IOWA DOT Highway Division

STANDARD DESIGN - 40' ROADWAY, THREE SPAN BRIDGE

PRETENSIONED PRESTRESSED CONCRETE BEAM BRIDGES

SEPTEMBER, 2014

TEE PIER-HP10x57 SRL-2 STEEL PILE FOOTINGS

45° SKEW - H=25' TO 40'

H40-86-14

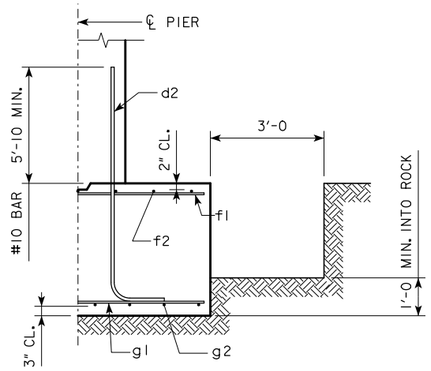

TYPICAL SECTION

H IN FT.	℄ - ℄ ABUT. BRG.	FOOTING SIZE
16 TO 18	138'-10 151'-4 163'-10 176'-4	3'-6 x 8' x 29'
	188'-10	3'-6 x 8' x 31'
	201'-4 213'-10 226'-4	3'-6 x 9' x 31'
	243'-0	3'-6 x 9' x 33'
19 TO 21	138'-10 151'-4	3'-6 x 8' x 29'
	163'-10 176'-4 188'-10	3'-6 x 8' x 31'
	201'-4 213'-10	3'-6 x 9' x 31'
	226'-4 243'-0	3'-6 x 9' x 33'
22 TO 24	138'-10 151'-4	3'-6 x 8' x 29'
	163'-10 176'-4	3'-6 x 8' x 31'
	188'-10 201'-4 213'-10	3'-6 x 9' x 31'
	226'-4 243'-0	3'-6 x 9' x 33'

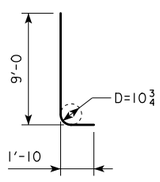

d2

NOTE: D = PIN DIAMETER.
DIMENSIONS ARE OUT TO OUT.

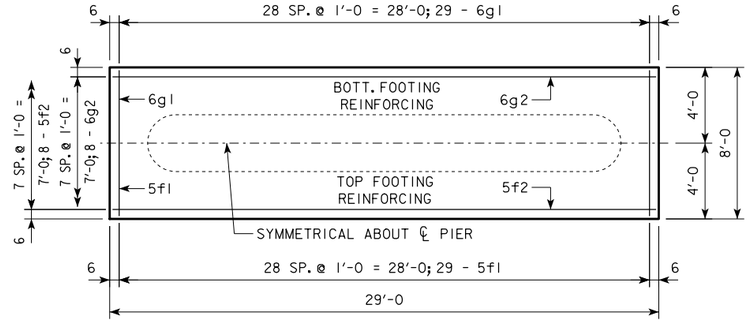

3'-6 x 8'-0 x 29'-0

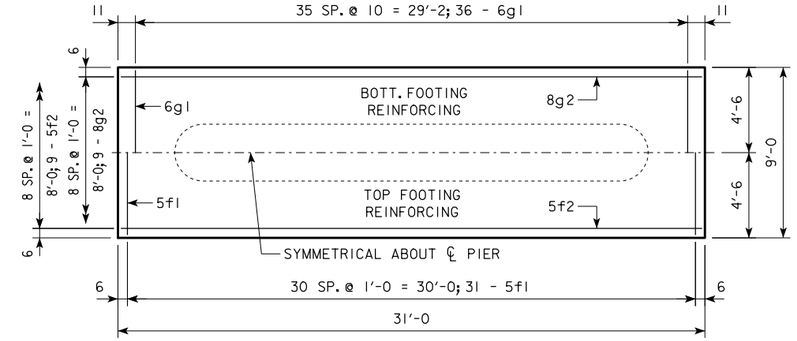

3'-6 x 9'-0 x 31'-0

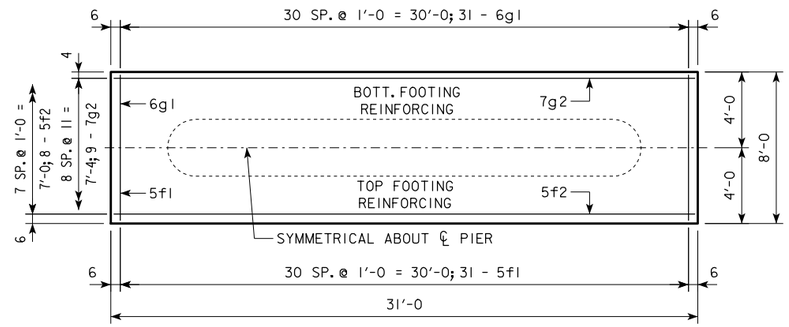

3'-6 x 8'-0 x 31'-0

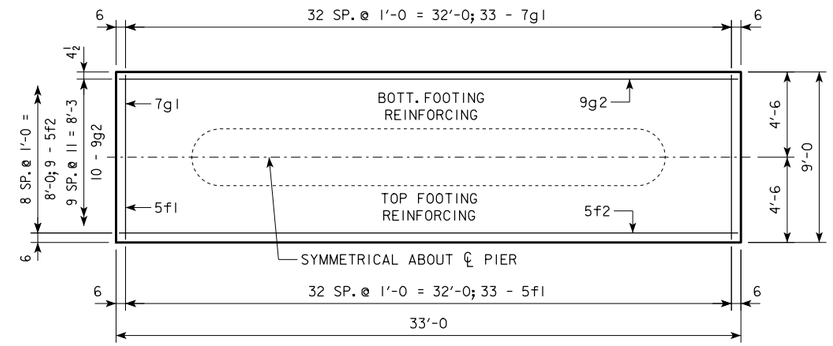

3'-6 x 9'-0 x 33'-0

NOTE: THE REINFORCING STEEL QUANTITY IS TO BE INCLUDED ON THE SUMMARY QUANTITIES SHEET IN THE PLAN.

NOTE: THE CONCRETE QUANTITY IS TO BE INCLUDED ON THE SUMMARY QUANTITIES SHEET IN THE PLAN.

FOOTING SIZE	REINFORCING STEEL (ONE FOOTING)					STRUCTURAL CONCRETE (CY)
	BAR	NO., SIZE & SPACING	LENGTH	WEIGHT (LB.)	TOTAL WEIGHT (LB.)	
3'-6 x 8' x 29'	d2	58 - #10 AS SHOWN	10'-10	2704	3853	30.1
	f1	29 - #5 @ 1'-0	7'-8	232		
	f2	8 - #5 @ 1'-0	28'-8	239		
	g1	29 - #6 @ 1'-0	7'-8	334		
	g2	8 - #6 @ 1'-0	28'-8	344		
3'-6 x 8' x 31'	d2	58 - #10 AS SHOWN	10'-10	2704	4129	32.1
	f1	31 - #5 @ 1'-0	7'-8	248		
	f2	8 - #5 @ 1'-0	30'-8	256		
	g1	31 - #6 @ 1'-0	7'-8	357		
	g2	9 - #7 @ 0'-11	30'-8	564		
3'-6 x 9' x 31'	d2	58 - #10 AS SHOWN	10'-10	2704	4478	36.2
	f1	31 - #5 @ 1'-0	8'-8	280		
	f2	9 - #5 @ 1'-0	30'-8	288		
	g1	36 - #6 @ 0'-10	8'-8	469		
	g2	9 - #8 @ 1'-0	30'-8	737		
3'-6 x 9' x 33'	d2	58 - #10 AS SHOWN	10'-10	2704	5005	38.5
	f1	33 - #5 @ 1'-0	8'-8	298		
	f2	9 - #5 @ 1'-0	32'-8	307		
	g1	33 - #7 @ 1'-0	8'-8	585		
	g2	10 - #9 @ 0'-11	32'-8	1111		

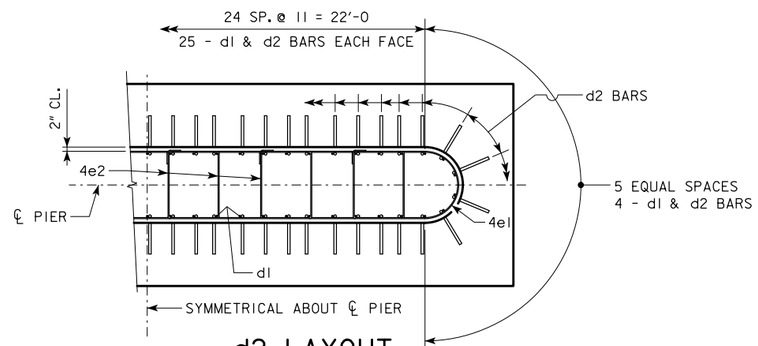

d2 LAYOUT
(SEE SECTION A-A ON SHEET H40-81-14.)

FOOTING NOTES:

THESE SPREAD FOOTINGS ARE DESIGNED AND DETAILED TO BE USED WITH THE CAP AND COLUMN DETAILS OF THE TEE PIERS AS SHOWN ON SHEET H40-81-14.

THESE SPREAD FOOTINGS SHALL EXTEND AT LEAST 12 INCHES INTO SUITABLE FOUNDATION ROCK AND THE LAST 12 INCHES OF ROCK EXCAVATION SHALL BE TO NEAT LINES OF MASONRY. THE FOUNDATION ROCK SHALL HAVE A MINIMUM LRFD NOMINAL BEARING RESISTANCE OF 30 KIPS PER SQUARE FOOT (ALLOWABLE SERVICE LOAD BEARING VALUE OF AT LEAST 10 KIPS PER SQUARE FOOT).

LATEST REVISION DATE

APPROVED BY BRIDGE ENGINEER

IOWA DOT Highway Division

STANDARD DESIGN - 40' ROADWAY, THREE SPAN BRIDGE

PRETENSIONED PRESTRESSED CONCRETE BEAM BRIDGES

SEPTEMBER, 2014

TEE PIER - SPREAD FOOTINGS

45° SKEW - H=16' TO 24'

H40-87-14

H IN FT.	℄ - ℄ ABUT. BRG.	FOOTING SIZE
25 TO 27	138′-10 151′-4	4′ x 8′ x 30′
	163′-10 176′-4 188′-10	4′ x 9′ x 30′
	201′-4 213′-10	4′ x 9′ x 32′
	226′-4 243′-0	4′ x 10′ x 32′
28 TO 30	138′-10	4′ x 8′ x 30′
	151′-4 163′-10 176′-4 188′-10	4′ x 9′ x 30′
	201′-4 213′-10	4′ x 9′ x 32′
	226′-4 243′-0	4′ x 10′ x 32′
31 TO 33	138′-10 151′-4 163′-10 176′-4	4′ x 9′ x 30′
	188′-10 201′-4	4′ x 9′ x 32′
	213′-10 226′-4 243′-0	4′ x 10′ x 32′
34 TO 36	138′-10 151′-4 163′-10	4′ x 9′ x 30′
	176′-4 188′-10	4′ x 9′ x 32′
	201′-4 213′-10 226′-4	4′ x 10′ x 32′
	243′-0	4′ x 10′ x 34′
37 TO 40	138′-10 151′-4	4′ x 9′ x 30′
	163′-10 176′-4	4′ x 9′ x 32′
	188′-10 201′-4 213′-10	4′ x 10′ x 32′
	226′-4 243′-0	4′ x 10′ x 34′

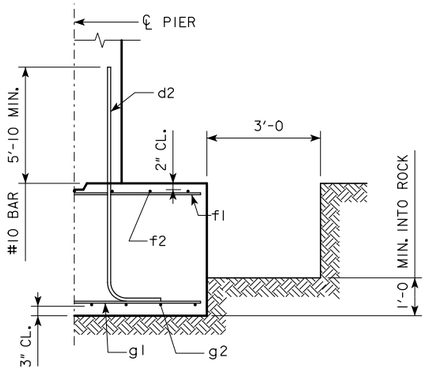

TYPICAL SECTION

NOTE: THE REINFORCING STEEL QUANTITY IS TO BE INCLUDED ON THE SUMMARY QUANTITIES SHEET IN THE PLAN.

NOTE: THE CONCRETE QUANTITY IS TO BE INCLUDED ON THE SUMMARY QUANTITIES SHEET IN THE PLAN.

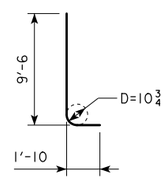

d2

NOTE: D = PIN DIAMETER.
DIMENSIONS ARE OUT TO OUT.

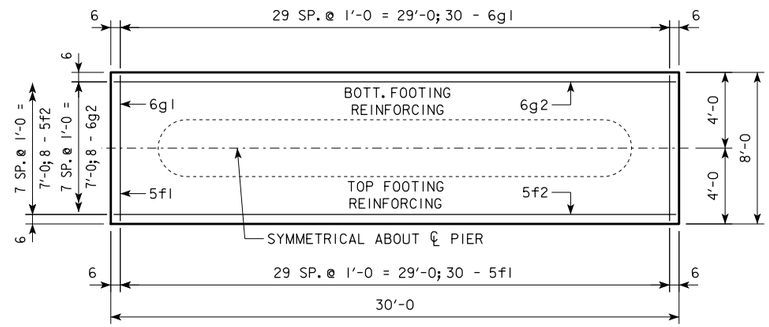

4′-0 x 8′-0 x 30′-0

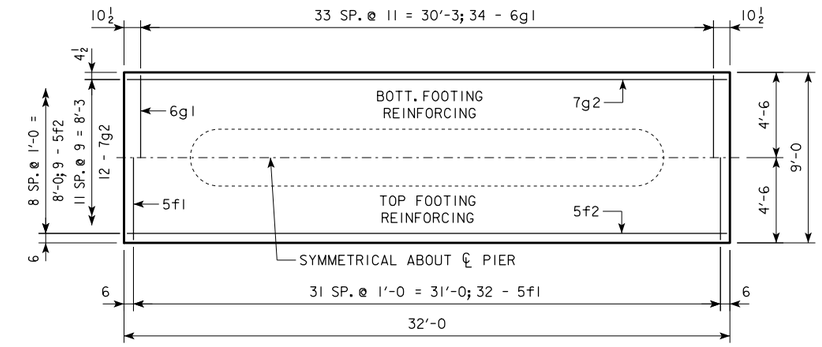

4′-0 x 9′-0 x 32′-0

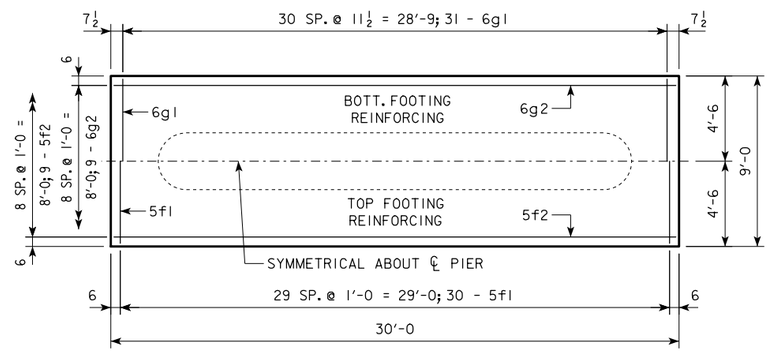

4′-0 x 9′-0 x 30′-0

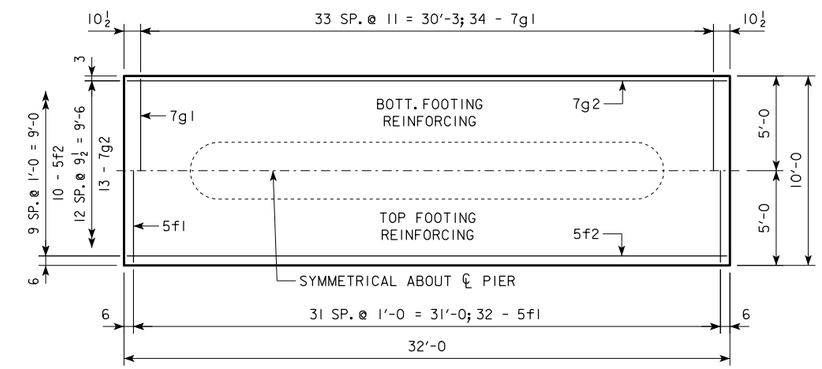

4′-0 x 10′-0 x 32′-0

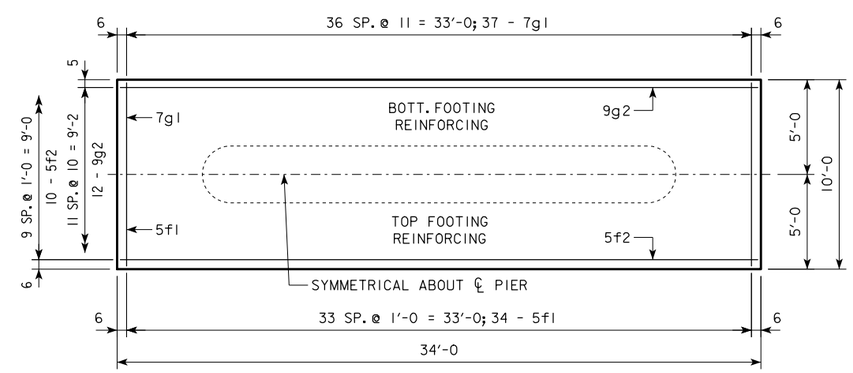

4′-0 x 10′-0 x 34′-0

FOOTING NOTES:

THESE SPREAD FOOTINGS ARE DESIGNED AND DETAILED TO BE USED WITH THE CAP AND COLUMN DETAILS OF THE TEE PIERS AS SHOWN ON SHEET H40-81-14.

THESE SPREAD FOOTINGS SHALL EXTEND AT LEAST 12 INCHES INTO SUITABLE FOUNDATION ROCK AND THE LAST 12 INCHES OF ROCK EXCAVATION SHALL BE TO NEAT LINES OF MASONRY. THE FOUNDATION ROCK SHALL HAVE A MINIMUM LRFD NOMINAL BEARING RESISTANCE OF 30 KIPS PER SQUARE FOOT (ALLOWABLE SERVICE LOAD BEARING VALUE OF AT LEAST 10 KIPS PER SQUARE FOOT).

FOOTING SIZE	REINFORCING STEEL (ONE FOOTING)					STRUCTURAL CONCRETE (CY)
	BAR	NO., SIZE & SPACING	LENGTH	WEIGHT (LB.)	TOTAL WEIGHT (LB.)	
4′ x 8′ x 30′	d2	58 - #10 AS SHOWN	11′-4	2828	4017	35.6
	f1	30 - #5 @ 1′-0	7′-8	240		
	f2	8 - #5 @ 1′-0	29′-8	248		
	g1	30 - #6 @ 1′-0	7′-8	345		
	g2	8 - #6 @ 1′-0	29′-8	356		
4′ x 9′ x 30′	d2	58 - #10 AS SHOWN	11′-4	2828	4182	40.0
	f1	30 - #5 @ 1′-0	8′-8	271		
	f2	9 - #5 @ 1′-0	29′-8	278		
	g1	31 - #6 @ 0′-11½	8′-8	404		
	g2	9 - #6 @ 1′-0	29′-8	401		
4′ x 9′ x 32′	d2	58 - #10 AS SHOWN	11′-4	2828	4634	42.7
	f1	32 - #5 @ 1′-0	8′-8	289		
	f2	9 - #5 @ 1′-0	31′-8	297		
	g1	34 - #6 @ 0′-11	8′-8	443		
	g2	12 - #7 @ 0′-9	31′-8	777		
4′ x 10′ x 32′	d2	58 - #10 AS SHOWN	11′-4	2828	4994	47.4
	f1	32 - #5 @ 1′-0	9′-8	323		
	f2	10 - #5 @ 1′-0	31′-8	330		
	g1	34 - #7 @ 0′-11	9′-8	672		
	g2	13 - #7 @ 0′-9½	31′-8	841		
4′ x 10′ x 34′	d2	58 - #10 AS SHOWN	11′-4	2828	5627	50.4
	f1	34 - #5 @ 1′-0	9′-8	343		
	f2	10 - #5 @ 1′-0	33′-8	351		
	g1	37 - #7 @ 0′-11	9′-8	731		
	g2	12 - #9 @ 0′-10	33′-8	1374		

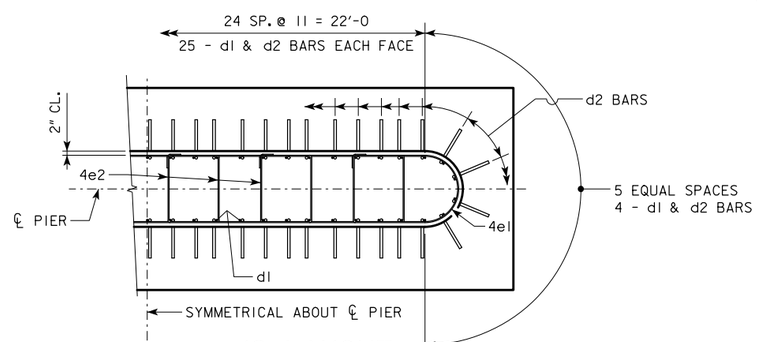

d2 LAYOUT
(SEE SECTION A-A ON SHEET H40-81-14.)

LATEST REVISION DATE

APPROVED BY BRIDGE ENGINEER

IOWA DOT Highway Division

STANDARD DESIGN - 40′ ROADWAY, THREE SPAN BRIDGE

PRETENSIONED PRESTRESSED CONCRETE BEAM BRIDGES

SEPTEMBER, 2014

TEE PIER - SPREAD FOOTINGS

45° SKEW - H=25′ TO 40′

H40-88-14

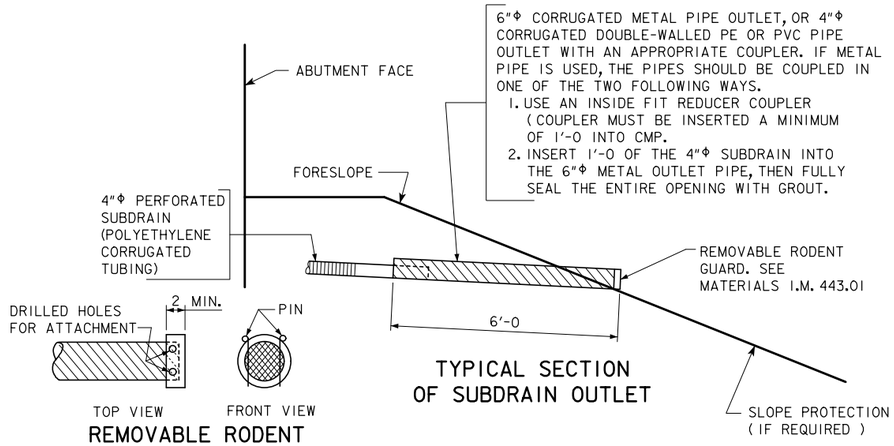

OUTLET DETAILS

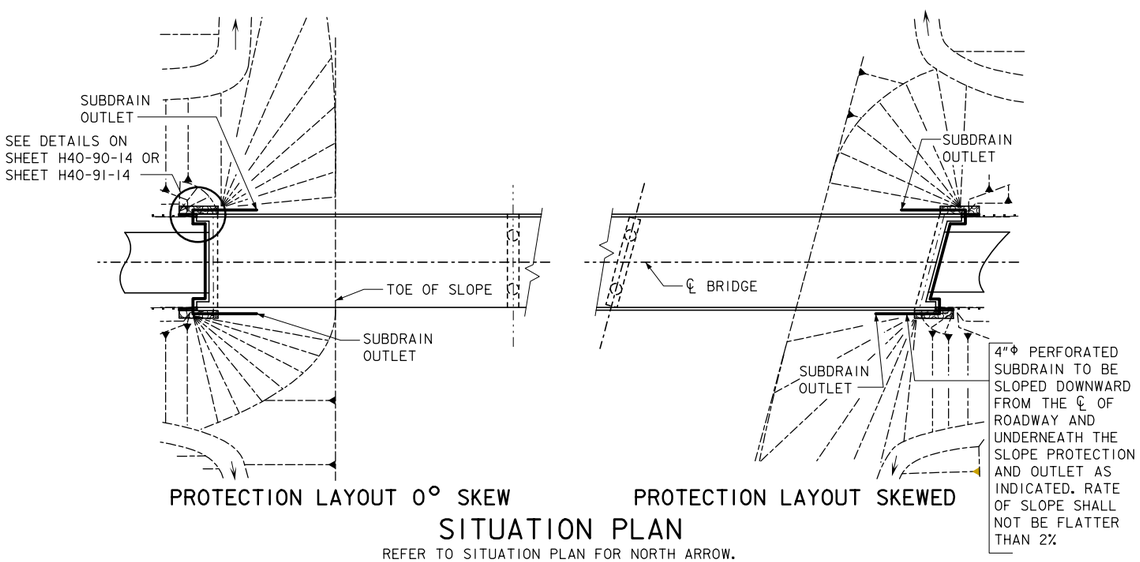

SITUATION PLAN

REFER TO SITUATION PLAN FOR NORTH ARROW.

NOTE:
SEE ABUTMENT BACKFILL DETAILS SHEET FOR DETAILS NOT SHOWN ON THIS SHEET WHICH ARE PERTINENT TO THIS STRUCTURE.

LATEST REVISION DATE

APPROVED BY BRIDGE ENGINEER

IOWA DOT Highway Division

STANDARD DESIGN - 40' ROADWAY, THREE SPAN BRIDGE

PRETENSIONED PRESTRESSED CONCRETE BEAM BRIDGES

SEPTEMBER, 2014

SUBDRAIN DETAILS

H40-89-14

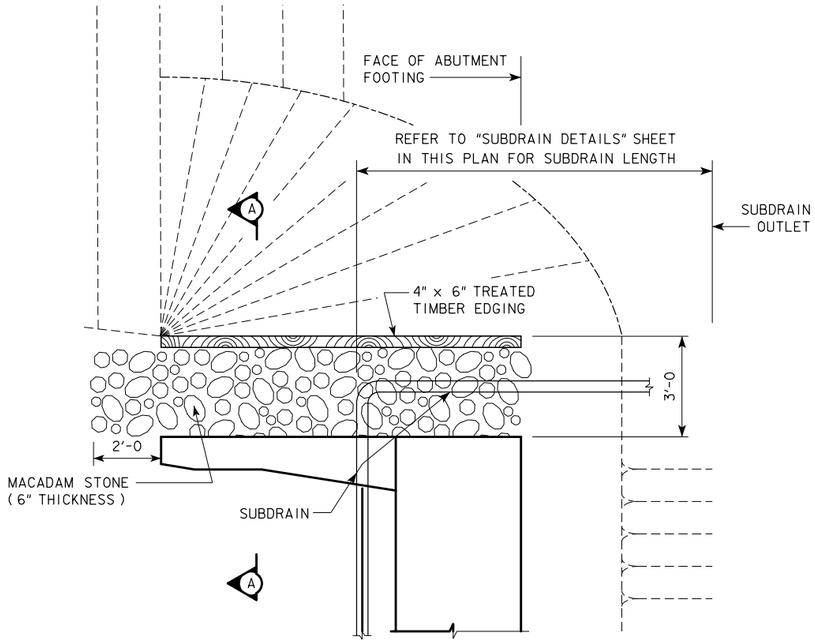

TOP VIEW OF WING ARMORING

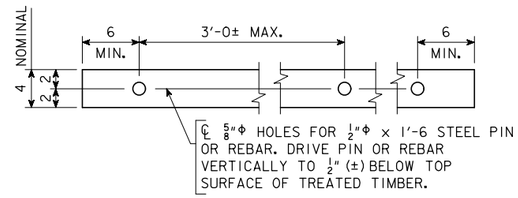

4" x 6" TREATED TIMBER EDGING DETAILS

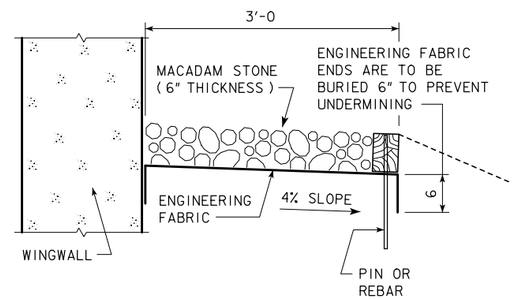

SECTION A-A

SUBDRAIN NOTES:

SEE H40-89-14 AND "GENERAL ELEVATION DATA" SHEETS FOR DETAILS OF PLACING ALL SUBDRAINS AND SUBDRAIN OUTLETS REQUIRED FOR THIS STRUCTURE.

THE BRIDGE CONTRACTOR IS TO INSTALL SUBDRAINS BEHIND THE ABUTMENT. THE SUBDRAINS SHALL BE 4" IN DIAMETER AND BE IN ACCORDANCE WITH ARTICLE 4143.01, B, OF THE STANDARD SPECIFICATIONS. THE SUBDRAIN OUTLET SHALL CONSIST OF A 6'-0 LENGTH OF PIPE WITH A REMOVABLE RODENT GUARD.

THE DIMENSIONS SHOWN FOR THE PROPOSED SUBDRAINS ARE BASED ON THE PROPOSED GRADING LAYOUT OF BRIDGE BERMS. THE DIMENSIONS SHOWN ARE FOR ESTIMATING ONLY. REQUIRED LENGTHS AND GENERAL LOCATIONS OF SUBDRAINS ARE SUBJECT TO CHANGE DUE TO FIELD ADJUSTMENTS OF THE GRADING LAYOUT.

THE COST OF FURNISHING AND PLACING SUBDRAIN (INCLUDING EXCAVATION), GRANULAR BACKFILL, POROUS BACKFILL, AND SUBDRAIN OUTLET IS TO BE INCLUDED IN THE PRICE BID FOR "STRUCTURAL CONCRETE (BRIDGE)". NO EXTRA PAYMENT WILL BE MADE.

MACADAM STONE WING ARMORING NOTES:

MACADAM STONE SHALL BE PLACED ALONG THE SIDE OF THE WING AND ABUTMENT FOOTING. THIS IS TYPICAL AT EACH CORNER OF THE BRIDGE UNLESS OTHERWISE NOTED IN THE PLANS. THE MACADAM STONE AT THESE LOCATIONS SHALL BE UNDERLAYED WITH ENGINEERING FABRIC AND BE IN ACCORDANCE WITH ARTICLE 4196.01, B, 6 OF THE STANDARD SPECIFICATIONS.

THE BRIDGE BERM FORESLOPE SHALL BE COMPACTED AND SHAPED AS SHOWN ON THESE PLANS, THE SITUATION PLAN AND AS DIRECTED BY THE ENGINEER. THE BERM FORESLOPE SHALL BE FIRM WHEN THE ENGINEERING FABRIC AND MACADAM STONE ARE PLACED.

THE ENGINEERING FABRIC SHALL BE IN ACCORDANCE WITH ARTICLE 4196.01, B, 6 OF THE STANDARD SPECIFICATIONS. IF THE ENGINEERING FABRIC IS LAPPED THE LAPS SHALL BE A MINIMUM OF ONE FOOT IN LENGTH, SHINGLE FASHION WITH UP SLOPE LAP PIECE ON TOP AND STAPLED FOR CONTINUITY.

THE MACADAM STONE SHALL BE IN ACCORDANCE WITH ARTICLE 4122.02, OF THE STANDARD SPECIFICATIONS, FOR COARSE MATERIAL (NO CHOKE STONE IS ALLOWED).

WOOD PRESERVATIVE TREATMENT FOR THE TIMBER EDGING SHALL MEET THE REQUIREMENTS FOR GUARDRAIL POSTS, SAWED FOUR SIDES AND BE IN ACCORDANCE WITH SECTION 4161 OF THE STANDARD SPECIFICATIONS.

THE MACADAM STONE SHALL BE DEPOSITED, SPREAD, CONSOLIDATED AND SHAPED BY MECHANICAL OR HAND METHODS THAT WILL PROVIDE UNIFORM DEPTH AND DENSITY AND PROVIDE UNIFORM SURFACE APPEARANCE.

THE BRIDGE WING ARMORING SHALL BE BID AS "BRIDGE WING ARMORING - MACADAM STONE" IN SQUARE YARDS AND SHALL INCLUDE COSTS OF ALL MATERIAL AND LABOR TO CONSTRUCT THE WING ARMORING AS SHOWN ON THESE PLANS.

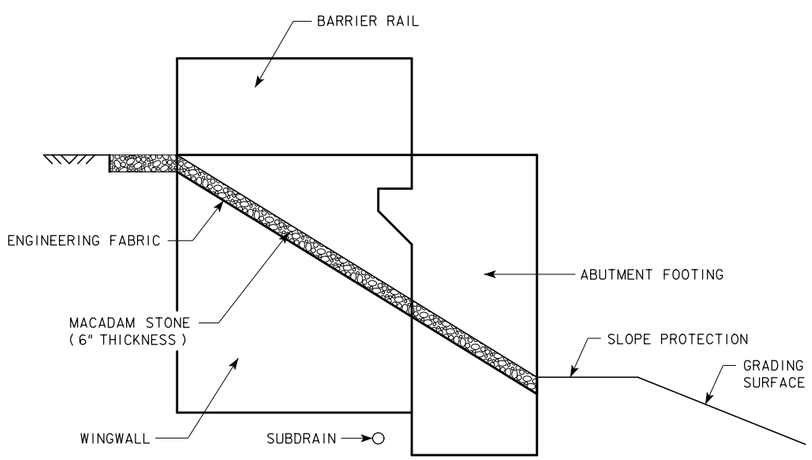

PROFILE VIEW OF WING ARMORING

(SHOWN FOR INTEGRAL ABUTMENT)

LATEST REVISION DATE

APPROVED BY BRIDGE ENGINEER

IOWA DOT Highway Division

STANDARD DESIGN - 40' ROADWAY, THREE SPAN BRIDGE

PRETENSIONED PRESTRESSED CONCRETE BEAM BRIDGES

SEPTEMBER, 2014

WING ARMORING DETAILS

A & B BEAMS

H40-90-14

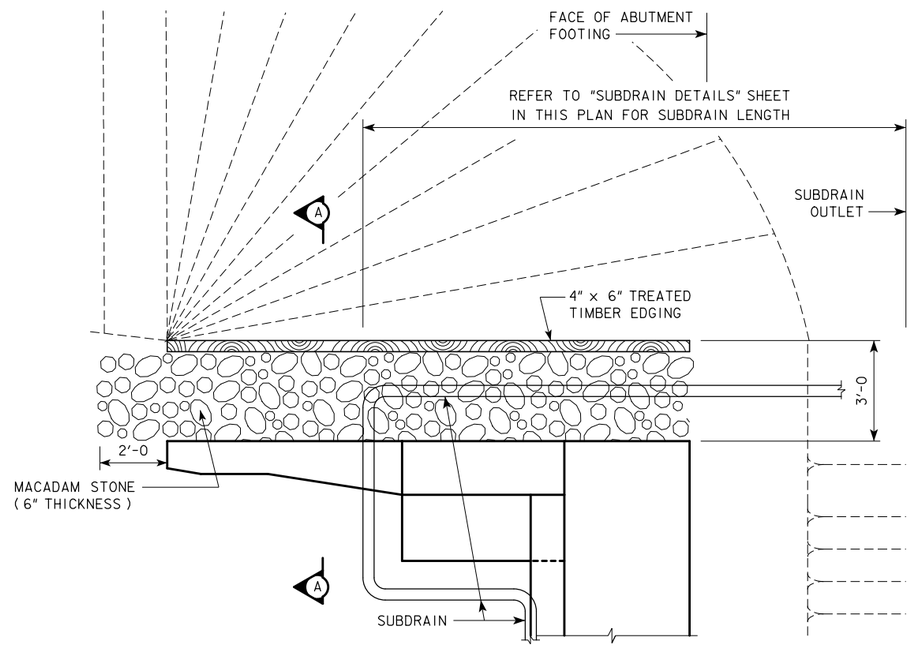

TOP VIEW OF WING ARMORING WITH WING EXTENSION

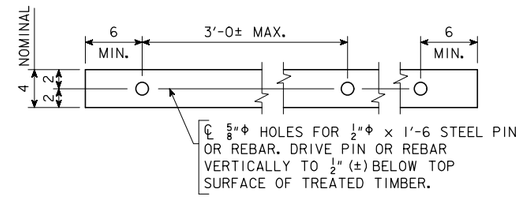

4" x 6" TREATED TIMBER EDGING DETAILS

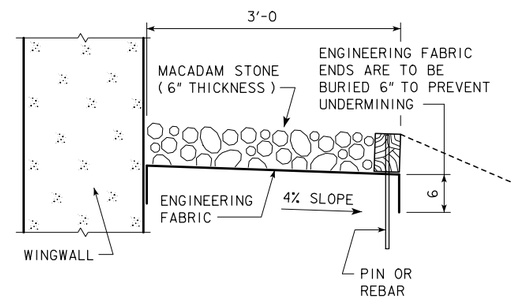

SECTION A-A

SUBDRAIN NOTES:

SEE H40-89-14 AND "GENERAL ELEVATION DATA" SHEETS FOR DETAILS OF PLACING ALL SUBDRAINS AND SUBDRAIN OUTLETS REQUIRED FOR THIS STRUCTURE.

THE BRIDGE CONTRACTOR IS TO INSTALL SUBDRAINS BEHIND THE ABUTMENT. THE SUBDRAINS SHALL BE 4" IN DIAMETER AND BE IN ACCORDANCE WITH ARTICLE 4143.01, B, OF THE STANDARD SPECIFICATIONS. THE SUBDRAIN OUTLET SHALL CONSIST OF A 6'-0 LENGTH OF PIPE WITH A REMOVABLE RODENT GUARD.

THE DIMENSIONS SHOWN FOR THE PROPOSED SUBDRAINS ARE BASED ON THE PROPOSED GRADING LAYOUT OF BRIDGE BERMS. THE DIMENSIONS SHOWN ARE FOR ESTIMATING ONLY. REQUIRED LENGTHS AND GENERAL LOCATIONS OF SUBDRAINS ARE SUBJECT TO CHANGE DUE TO FIELD ADJUSTMENTS OF THE GRADING LAYOUT.

THE COST OF FURNISHING AND PLACING SUBDRAIN (INCLUDING EXCAVATION), GRANULAR BACKFILL, POROUS BACKFILL, AND SUBDRAIN OUTLET IS TO BE INCLUDED IN THE PRICE BID FOR "STRUCTURAL CONCRETE (BRIDGE)". NO EXTRA PAYMENT WILL BE MADE.

MACADAM STONE WING ARMORING NOTES:

MACADAM STONE SHALL BE PLACED ALONG THE SIDE OF THE WING AND ABUTMENT FOOTING. THIS IS TYPICAL AT EACH CORNER OF THE BRIDGE UNLESS OTHERWISE NOTED IN THE PLANS. THE MACADAM STONE AT THESE LOCATIONS SHALL BE UNDERLAYED WITH ENGINEERING FABRIC AND BE IN ACCORDANCE WITH ARTICLE 4196.01, B, 6 OF THE STANDARD SPECIFICATIONS.

THE BRIDGE BERM FORESLOPE SHALL BE COMPACTED AND SHAPED AS SHOWN ON THESE PLANS, THE SITUATION PLAN AND AS DIRECTED BY THE ENGINEER. THE BERM FORESLOPE SHALL BE FIRM WHEN THE ENGINEERING FABRIC AND MACADAM STONE ARE PLACED.

THE ENGINEERING FABRIC SHALL BE IN ACCORDANCE WITH ARTICLE 4196.01, B, 6 OF THE STANDARD SPECIFICATIONS. IF THE ENGINEERING FABRIC IS LAPPED THE LAPS SHALL BE A MINIMUM OF ONE FOOT IN LENGTH, SHINGLE FASHION WITH UP SLOPE LAP PIECE ON TOP AND STAPLED FOR CONTINUITY.

THE MACADAM STONE SHALL BE IN ACCORDANCE WITH ARTICLE 4122.02, OF THE STANDARD SPECIFICATIONS, FOR COARSE MATERIAL (NO CHOKE STONE IS ALLOWED).

WOOD PRESERVATIVE TREATMENT FOR THE TIMBER EDGING SHALL MEET THE REQUIREMENTS FOR GUARDRAIL POSTS, SAWED FOUR SIDES, AND BE IN ACCORDANCE WITH SECTION 4161 OF THE STANDARD SPECIFICATIONS.

THE MACADAM STONE SHALL BE DEPOSITED, SPREAD, CONSOLIDATED AND SHAPED BY MECHANICAL OR HAND METHODS THAT WILL PROVIDE UNIFORM DEPTH AND DENSITY AND PROVIDE UNIFORM SURFACE APPEARANCE.

THE BRIDGE WING ARMORING SHALL BE BID AS "BRIDGE WING ARMORING - MACADAM STONE" IN SQUARE YARDS AND SHALL INCLUDE COSTS OF ALL MATERIAL AND LABOR TO CONSTRUCT THE WING ARMORING AS SHOWN ON THESE PLANS.

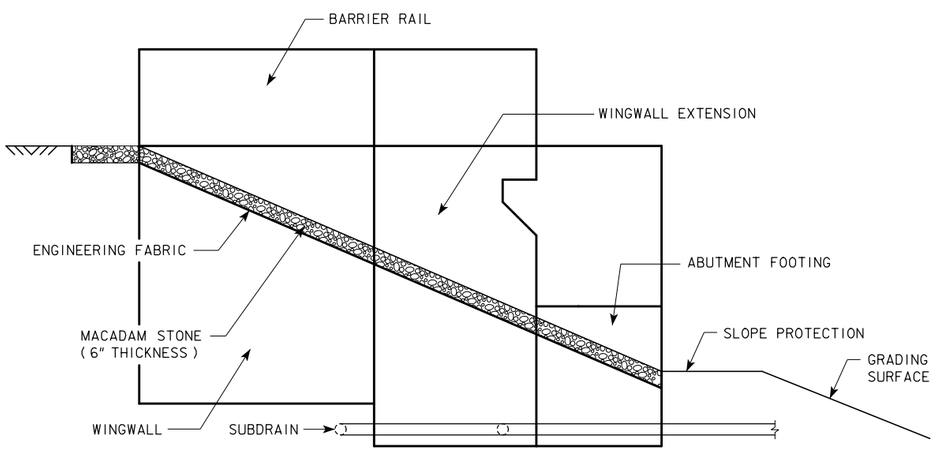

PROFILE VIEW OF WING ARMORING WITH WING EXTENSION

(SHOWN FOR INTEGRAL ABUTMENT WITH WING EXTENSIONS)

LATEST REVISION DATE

APPROVED BY BRIDGE ENGINEER

IOWA DOT Highway Division

STANDARD DESIGN - 40' ROADWAY, THREE SPAN BRIDGE

PRETENSIONED PRESTRESSED CONCRETE BEAM BRIDGES

SEPTEMBER, 2014

WING ARMORING DETAILS

C BEAMS

H40-91-14

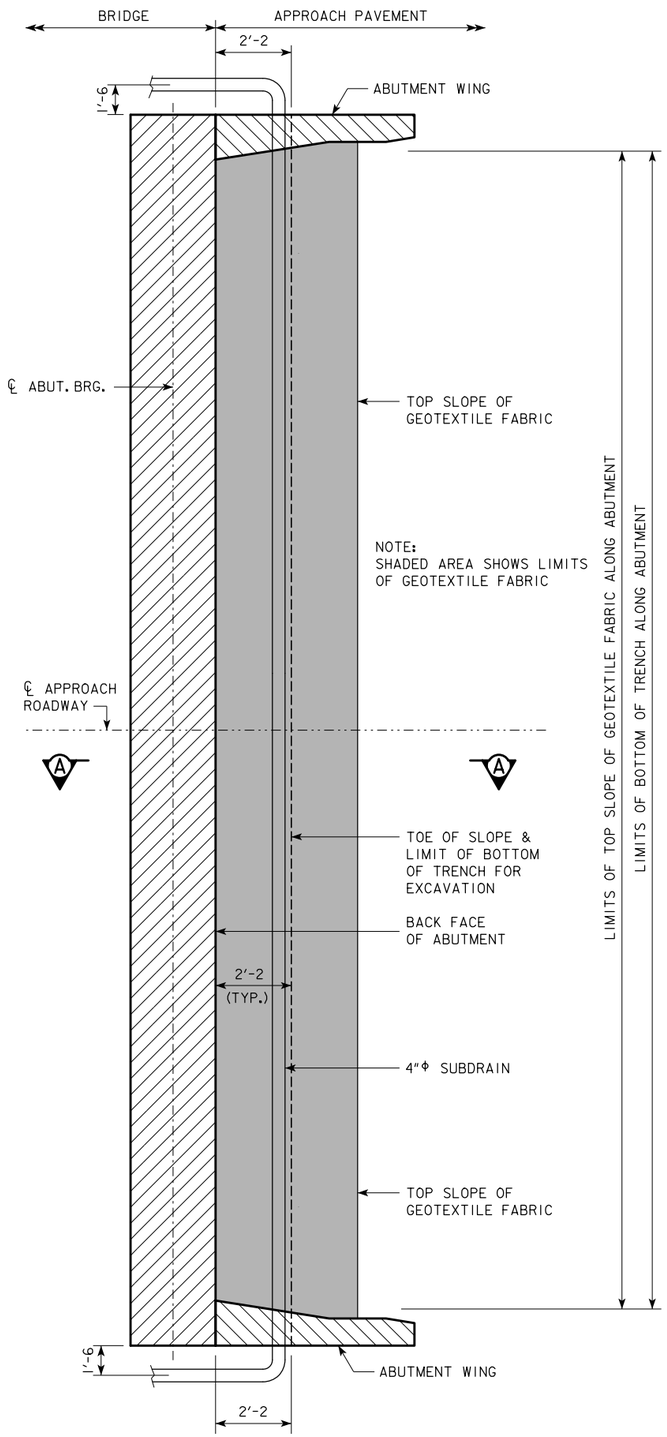

ABUTMENT PLAN WITHOUT WING EXTENSIONS

ABUTMENT BACKFILL PROCESS:

THE BASE OF THE EXCAVATION SUBGRADE BEHIND THE ABUTMENT IS TO BE GRADED WITH A 4% SLOPE AWAY FROM THE ABUTMENT FOOTING AND A 2% CROSS SLOPE IN THE DIRECTION OF THE SUBDRAIN OUTLET. THIS EXCAVATION SHAPING IS TO BE DONE PRIOR TO BEGINNING INSTALLATION OF THE GEOTEXTILE AND BACKFILL MATERIAL.

AFTER THE SUBGRADE HAS BEEN SHAPED, THE GEOTEXTILE FABRIC SHALL BE INSTALLED IN ACCORDANCE WITH THE DETAILS SHOWN. THE FABRIC IS INTENDED TO BE INSTALLED IN THE BASE OF THE EXCAVATION AND EXTENDED VERTICALLY UP THE ABUTMENT BACKWALL, ABUTMENT WING WALLS, AND EXCAVATION FACE TO A HEIGHT THAT WILL BE APPROXIMATELY 1 TO 2 FOOT HIGHER THAN THE HEIGHT OF THE POROUS BACKFILL PLACEMENT AS SHOWN IN THE "BACKFILL DETAILS" ON THIS SHEET. THE STRIPS OF THE FABRIC PLACED SHALL OVERLAP APPROXIMATELY 1 FOOT AND SHALL BE PINNED IN PLACE. THE FABRIC SHALL BE ATTACHED TO THE ABUTMENT BY USING LATH FOLDED IN THE FABRIC AND SECURED TO THE CONCRETE WITH SHALLOW CONCRETE NAILS. THE FABRIC PLACED AGAINST THE EXCAVATION FACE SHALL BE PINNED.

WHEN THE FABRIC IS IN PLACE, THE SUBDRAIN SHALL BE INSTALLED DIRECTLY ON THE FABRIC AT THE TOE OF THE REAR EXCAVATION SLOPE. A SLOT WILL NEED TO BE CUT IN THE FABRIC AT THE POINT WHERE THE SUBDRAIN EXITS THE FABRIC NEAR THE END OF THE ABUTMENT WING WALL.

POROUS BACKFILL IS THEN PLACED AND LEVELED, NO COMPACTION IS REQUIRED.

THE REMAINING WORK INVOLVES BACKFILLING WITH FLOODABLE BACKFILL, SURFACE FLOODING, AND VIBRATORY COMPACTION. THE FLOODABLE BACKFILL MATERIAL SHALL BE IN ACCORDANCE WITH THE STANDARD SPECIFICATIONS. THE FLOODABLE BACKFILL SHALL BE PLACED IN INDIVIDUAL LIFTS, SURFACE FLOODED, AND COMPACTED WITH VIBRATORY COMPACTION TO ENSURE FULL CONSOLIDATION. LIMIT THE LOOSE LIFTS TO NO MORE THAN 2 FEET OF THICKNESS.

START SURFACE FLOODING FOR EACH FLOODABLE BACKFILL LIFT AT THE HIGH POINT OF THE SUBDRAIN AND PROGRESS TO THE LOW POINT WHERE THE SUBDRAIN EXITS THE FABRIC. TO ENSURE UNIFORM SURFACE FLOODING, WATER RUNNING FULL IN A 2-INCH DIAMETER HOSE SHOULD BE SPRAYED IN SUCCESSIVE 6-FOOT TO 8-FOOT INCREMENTS FOR 5 MINUTES WITHIN EACH INCREMENT.

FLOODABLE BACKFILL LIFT PLACEMENT, FLOODING, AND COMPACTION SHALL PROGRESS UNTIL THE REQUIRED FULL THICKNESS OF THE ABUTMENT BACKFILL HAS BEEN COMPLETED.

WATER REQUIRED FOR FLOODING, SUBDRAINS, POROUS BACKFILL, FLOODABLE BACKFILL, AND GEOTEXTILE FABRIC FURNISHED AT THE BRIDGE ABUTMENTS WILL NOT BE MEASURED SEPARATELY FOR PAYMENT.

THE COST OF WATER REQUIRED FOR FLOODING, SUBDRAINS, POROUS BACKFILL, FLOODABLE BACKFILL, AND GEOTEXTILE FABRIC FURNISHED AT THE BRIDGE ABUTMENTS SHALL BE INCLUDED IN THE CONTRACT UNIT PRICE BID FOR STRUCTURAL CONCRETE.

NOTE:
SEE SUBDRAIN DETAILS SHEET FOR DETAILS NOT SHOWN ON THIS SHEET WHICH ARE PERTINENT TO THIS STRUCTURE.

NOTE:

SUBDRAIN SHALL SLOPE DOWNWARD 2% FROM ℄ APPROACH ROADWAY WHEN OUTLETTING BOTH SIDES OF THE ABUTMENT.

SUBDRAIN SHALL SLOPE DOWNWARD 2% FROM HIGH END WHEN OUTLETTING AT ONE END OF THE ABUTMENT.

THE GEOTEXTILE FABRIC SHALL BE IN ACCORDANCE WITH ARTICLE 4196.01, B, 6 OF THE STANDARD SPECIFICATIONS. IF THE ENGINEERING FABRIC IS LAPPED THE LAPS SHALL BE A MINIMUM OF ONE FOOT IN LENGTH, SHINGLE FASHION WITH UP SLOPE LAP PIECE ON TOP AND STAPLED FOR CONTINUITY.

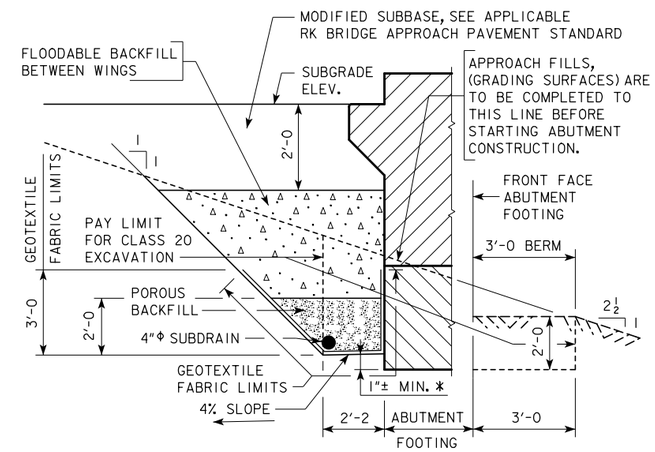

SECTION A-A

BACKFILL DETAILS

NOTE: GEOTEXTILE FABRIC WILL BE ATTACHED TO FACE OF ABUTMENT FOOTING AND WINGS.

* DIMENSION VARIES DUE TO 2% SUBDRAIN SLOPE.

LATEST REVISION DATE

APPROVED BY BRIDGE ENGINEER

IOWA DOT Highway Division

STANDARD DESIGN - 40' ROADWAY, THREE SPAN BRIDGE

PRETENSIONED PRESTRESSED CONCRETE BEAM BRIDGES

SEPTEMBER, 2014

ABUTMENT BACKFILL DETAILS

A & B BEAMS - 0° SKEW

H40-92-14

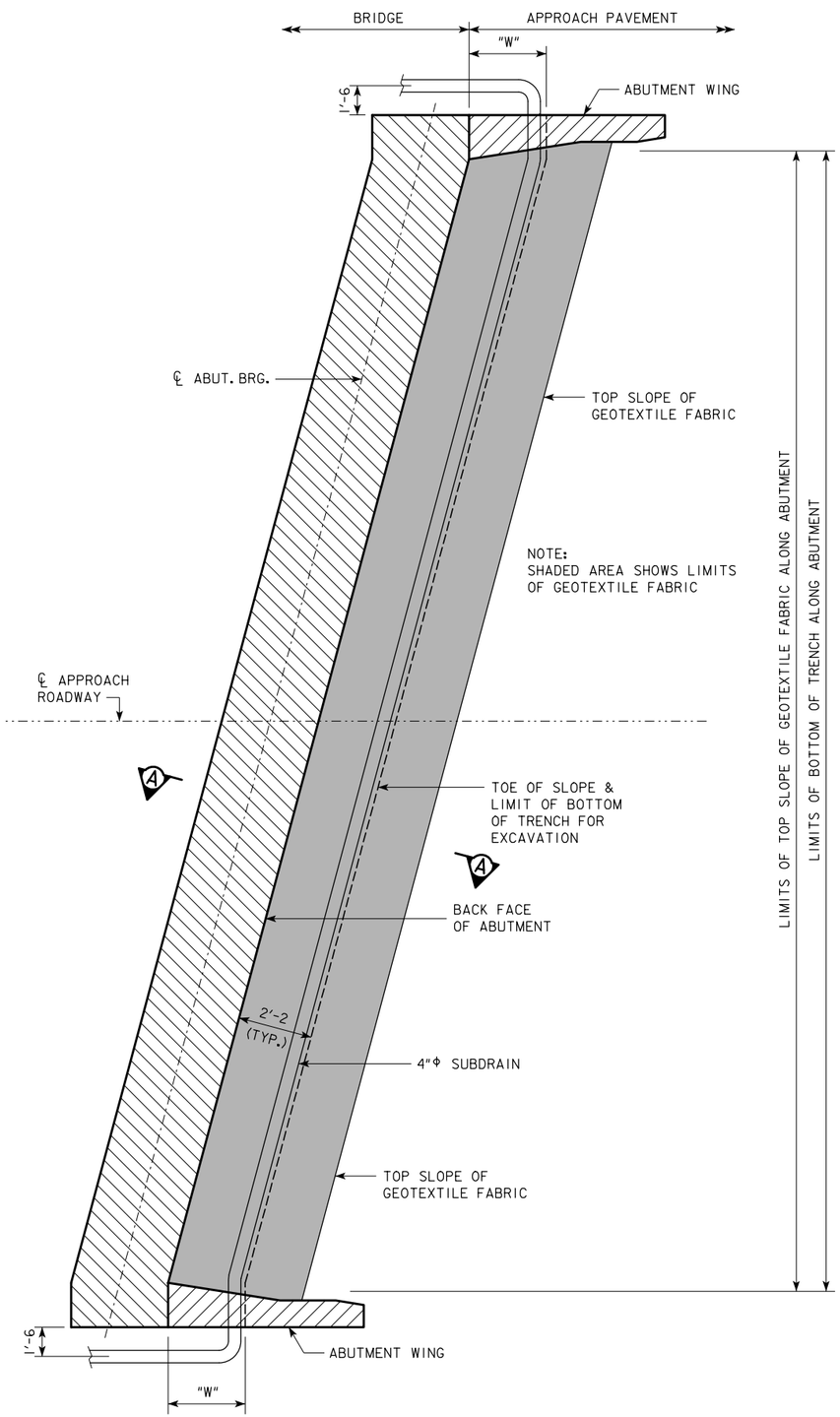

SKEWED ABUTMENT PLAN WITHOUT WING EXTENSIONS

(SKEWED LEFT AHEAD SHOWN, SKEWED RIGHT AHEAD SIMILIAR)

"W" DIMENSION	
SKEW	DIMENSION
15°	2'-2 7/8
30°	2'-6
45°	3'-0 3/4

ABUTMENT BACKFILL PROCESS:

THE BASE OF THE EXCAVATION SUBGRADE BEHIND THE ABUTMENT IS TO BE GRADED WITH A 4% SLOPE AWAY FROM THE ABUTMENT FOOTING AND A 2% CROSS SLOPE IN THE DIRECTION OF THE SUBDRAIN OUTLET. THIS EXCAVATION SHAPING IS TO BE DONE PRIOR TO BEGINNING INSTALLATION OF THE GEOTEXTILE AND BACKFILL MATERIAL.

AFTER THE SUBGRADE HAS BEEN SHAPED, THE GEOTEXTILE FABRIC SHALL BE INSTALLED IN ACCORDANCE WITH THE DETAILS SHOWN. THE FABRIC IS INTENDED TO BE INSTALLED IN THE BASE OF THE EXCAVATION AND EXTENDED VERTICALLY UP THE ABUTMENT BACKWALL, ABUTMENT WING WALLS, AND EXCAVATION FACE TO A HEIGHT THAT WILL BE APPROXIMATELY 1 TO 2 FOOT HIGHER THAN THE HEIGHT OF THE POROUS BACKFILL PLACEMENT AS SHOWN IN THE "BACKFILL DETAILS" ON THIS SHEET. THE STRIPS OF THE FABRIC PLACED SHALL OVERLAP APPROXIMATELY 1 FOOT AND SHALL BE PINNED IN PLACE. THE FABRIC SHALL BE ATTACHED TO THE ABUTMENT BY USING LATH FOLDED IN THE FABRIC AND SECURED TO THE CONCRETE WITH SHALLOW CONCRETE NAILS. THE FABRIC PLACED AGAINST THE EXCAVATION FACE SHALL BE PINNED.

WHEN THE FABRIC IS IN PLACE, THE SUBDRAIN SHALL BE INSTALLED DIRECTLY ON THE FABRIC AT THE TOE OF THE REAR EXCAVATION SLOPE. A SLOT WILL NEED TO BE CUT IN THE FABRIC AT THE POINT WHERE THE SUBDRAIN EXITS THE FABRIC NEAR THE END OF THE ABUTMENT WING WALL.

POROUS BACKFILL IS THEN PLACED AND LEVELED, NO COMPACTION IS REQUIRED.

THE REMAINING WORK INVOLVES BACKFILLING WITH FLOODABLE BACKFILL, SURFACE FLOODING, AND VIBRATORY COMPACTION. THE FLOODABLE BACKFILL MATERIAL SHALL BE IN ACCORDANCE WITH THE STANDARD SPECIFICATIONS. THE FLOODABLE BACKFILL SHALL BE PLACED IN INDIVIDUAL LIFTS, SURFACE FLOODED, AND COMPACTED WITH VIBRATORY COMPACTION TO ENSURE FULL CONSOLIDATION. LIMIT THE LOOSE LIFTS TO NO MORE THAN 2 FEET OF THICKNESS.

START SURFACE FLOODING FOR EACH FLOODABLE BACKFILL LIFT AT THE HIGH POINT OF THE SUBDRAIN AND PROGRESS TO THE LOW POINT WHERE THE SUBDRAIN EXITS THE FABRIC. TO ENSURE UNIFORM SURFACE FLOODING, WATER RUNNING FULL IN A 2-INCH DIAMETER HOSE SHOULD BE SPRAYED IN SUCCESSIVE 6-FOOT TO 8-FOOT INCREMENTS FOR 5 MINUTES WITHIN EACH INCREMENT.

FLOODABLE BACKFILL LIFT PLACEMENT, FLOODING, AND COMPACTION SHALL PROGRESS UNTIL THE REQUIRED FULL THICKNESS OF THE ABUTMENT BACKFILL HAS BEEN COMPLETED.

WATER REQUIRED FOR FLOODING, SUBDRAINS, POROUS BACKFILL, FLOODABLE BACKFILL, AND GEOTEXTILE FABRIC FURNISHED AT THE BRIDGE ABUTMENTS WILL NOT BE MEASURED SEPARATELY FOR PAYMENT.

THE COST OF WATER REQUIRED FOR FLOODING, SUBDRAINS, POROUS BACKFILL, FLOODABLE BACKFILL, AND GEOTEXTILE FABRIC FURNISHED AT THE BRIDGE ABUTMENTS SHALL BE INCLUDED IN THE CONTRACT UNIT PRICE BID FOR STRUCTURAL CONCRETE.

NOTE:
SEE SUBDRAIN DETAILS SHEET FOR DETAILS NOT SHOWN ON THIS SHEET WHICH ARE PERTINENT TO THIS STRUCTURE.

NOTE:

SUBDRAIN SHALL SLOPE DOWNWARD 2% FROM ℄ APPROACH ROADWAY WHEN OUTLETTING BOTH SIDES OF THE ABUTMENT.

SUBDRAIN SHALL SLOPE DOWNWARD 2% FROM HIGH END WHEN OUTLETTING AT ONE END OF THE ABUTMENT.

THE GEOTEXTILE FABRIC SHALL BE IN ACCORDANCE WITH ARTICLE 4196.01, B, 6 OF THE STANDARD SPECIFICATIONS. IF THE ENGINEERING FABRIC IS LAPPED THE LAPS SHALL BE A MINIMUM OF ONE FOOT IN LENGTH, SHINGLE FASHION WITH UP SLOPE LAP PIECE ON TOP AND STAPLED FOR CONTINUITY.

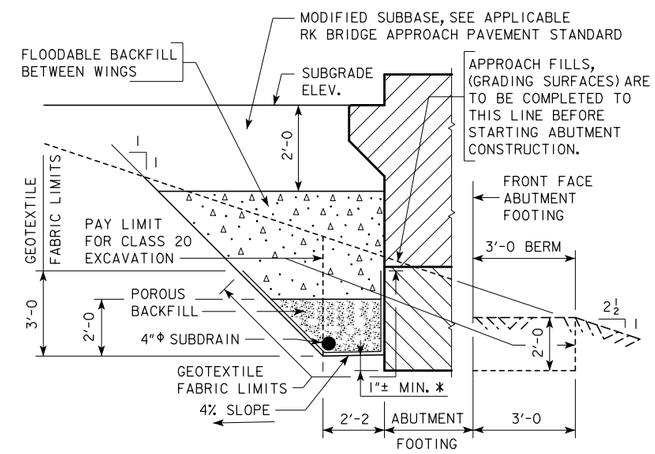

SECTION A-A

BACKFILL DETAILS

NOTE: GEOTEXTILE FABRIC WILL BE ATTACHED TO FACE OF ABUTMENT FOOTING AND WINGS.

* DIMENSION VARIES DUE TO 2% SUBDRAIN SLOPE.

LATEST REVISION DATE

APPROVED BY BRIDGE ENGINEER

IOWA DOT Highway Division

STANDARD DESIGN - 40' ROADWAY, THREE SPAN BRIDGE

PRETENSIONED PRESTRESSED CONCRETE BEAM BRIDGES

SEPTEMBER, 2014

ABUTMENT BACKFILL DETAILS

A & B BEAMS - SKEWED

H40-93-14

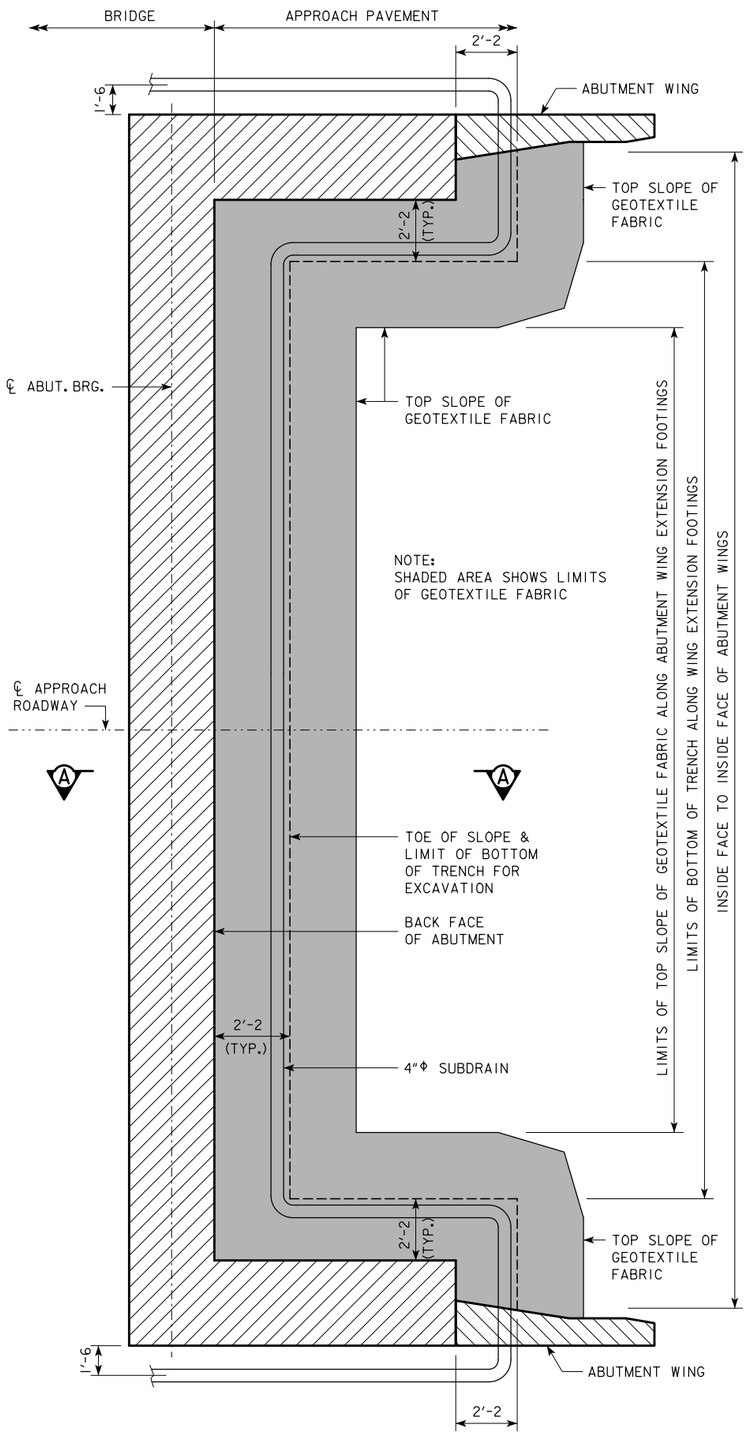

ABUTMENT PLAN WITH WING EXTENSIONS

ABUTMENT BACKFILL PROCESS:

THE BASE OF THE EXCAVATION SUBGRADE BEHIND THE ABUTMENT IS TO BE GRADED WITH A 4% SLOPE AWAY FROM THE ABUTMENT FOOTING AND A 2% CROSS SLOPE IN THE DIRECTION OF THE SUBDRAIN OUTLET. THIS EXCAVATION SHAPING IS TO BE DONE PRIOR TO BEGINNING INSTALLATION OF THE GEOTEXTILE AND BACKFILL MATERIAL.

AFTER THE SUBGRADE HAS BEEN SHAPED, THE GEOTEXTILE FABRIC SHALL BE INSTALLED IN ACCORDANCE WITH THE DETAILS SHOWN. THE FABRIC IS INTENDED TO BE INSTALLED IN THE BASE OF THE EXCAVATION AND EXTENDED VERTICALLY UP THE ABUTMENT BACKWALL, ABUTMENT WING WALLS, AND EXCAVATION FACE TO A HEIGHT THAT WILL BE APPROXIMATELY 1 TO 2 FOOT HIGHER THAN THE HEIGHT OF THE POROUS BACKFILL PLACEMENT AS SHOWN IN THE "BACKFILL DETAILS" ON THIS SHEET. THE STRIPS OF THE FABRIC PLACED SHALL OVERLAP APPROXIMATELY 1 FOOT AND SHALL BE PINNED IN PLACE. THE FABRIC SHALL BE ATTACHED TO THE ABUTMENT BY USING LATH FOLDED IN THE FABRIC AND SECURED TO THE CONCRETE WITH SHALLOW CONCRETE NAILS. THE FABRIC PLACED AGAINST THE EXCAVATION FACE SHALL BE PINNED.

WHEN THE FABRIC IS IN PLACE, THE SUBDRAIN SHALL BE INSTALLED DIRECTLY ON THE FABRIC AT THE TOE OF THE REAR EXCAVATION SLOPE. A SLOT WILL NEED TO BE CUT IN THE FABRIC AT THE POINT WHERE THE SUBDRAIN EXITS THE FABRIC NEAR THE END OF THE ABUTMENT WING WALL.

POROUS BACKFILL IS THEN PLACED AND LEVELED, NO COMPACTION IS REQUIRED.

THE REMAINING WORK INVOLVES BACKFILLING WITH FLOODABLE BACKFILL, SURFACE FLOODING, AND VIBRATORY COMPACTION. THE FLOODABLE BACKFILL MATERIAL SHALL BE IN ACCORDANCE WITH THE STANDARD SPECIFICATIONS. THE FLOODABLE BACKFILL SHALL BE PLACED IN INDIVIDUAL LIFTS, SURFACE FLOODED, AND COMPACTED WITH VIBRATORY COMPACTION TO ENSURE FULL CONSOLIDATION. LIMIT THE LOOSE LIFTS TO NO MORE THAN 2 FEET OF THICKNESS.

START SURFACE FLOODING FOR EACH FLOODABLE BACKFILL LIFT AT THE HIGH POINT OF THE SUBDRAIN AND PROGRESS TO THE LOW POINT WHERE THE SUBDRAIN EXITS THE FABRIC. TO ENSURE UNIFORM SURFACE FLOODING, WATER RUNNING FULL IN A 2-INCH DIAMETER HOSE SHOULD BE SPRAYED IN SUCCESSIVE 6-FOOT TO 8-FOOT INCREMENTS FOR 5 MINUTES WITHIN EACH INCREMENT.

FLOODABLE BACKFILL LIFT PLACEMENT, FLOODING, AND COMPACTION SHALL PROGRESS UNTIL THE REQUIRED FULL THICKNESS OF THE ABUTMENT BACKFILL HAS BEEN COMPLETED.

WATER REQUIRED FOR FLOODING, SUBDRAINS, POROUS BACKFILL, FLOODABLE BACKFILL, AND GEOTEXTILE FABRIC FURNISHED AT THE BRIDGE ABUTMENTS WILL NOT BE MEASURED SEPARATELY FOR PAYMENT.

THE COST OF WATER REQUIRED FOR FLOODING, SUBDRAINS, POROUS BACKFILL, FLOODABLE BACKFILL, AND GEOTEXTILE FABRIC FURNISHED AT THE BRIDGE ABUTMENTS SHALL BE INCLUDED IN THE CONTRACT UNIT PRICE BID FOR STRUCTURAL CONCRETE.

NOTE:
SEE SUBDRAIN DETAILS SHEET FOR DETAILS NOT SHOWN ON THIS SHEET WHICH ARE PERTINENT TO THIS STRUCTURE.

NOTE:

SUBDRAIN SHALL SLOPE DOWNWARD 2% FROM ℄ APPROACH ROADWAY WHEN OUTLETTING BOTH SIDES OF THE ABUTMENT.

SUBDRAIN SHALL SLOPE DOWNWARD 2% FROM HIGH END WHEN OUTLETTING AT ONE END OF THE ABUTMENT.

THE GEOTEXTILE FABRIC SHALL BE IN ACCORDANCE WITH ARTICLE 4196.01, B, 6 OF THE STANDARD SPECIFICATIONS. IF THE ENGINEERING FABRIC IS LAPPED THE LAPS SHALL BE A MINIMUM OF ONE FOOT IN LENGTH, SHINGLE FASHION WITH UP SLOPE LAP PIECE ON TOP AND STAPLED FOR CONTINUITY.

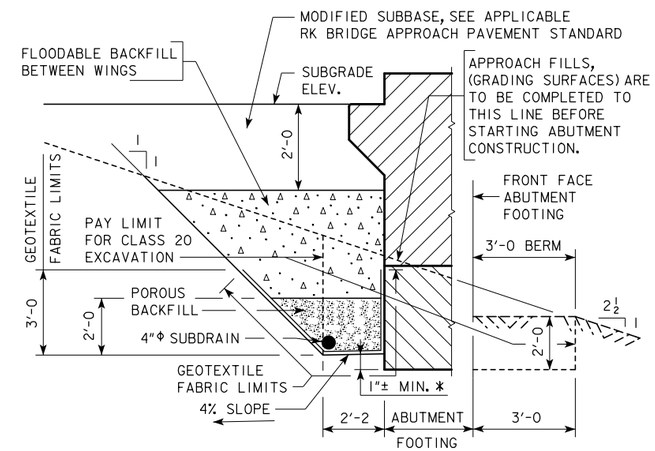

SECTION A-A

BACKFILL DETAILS

NOTE: GEOTEXTILE FABRIC WILL BE ATTACHED TO FACE OF ABUTMENT FOOTING AND WINGS.

* DIMENSION VARIES DUE TO 2% SUBDRAIN SLOPE.

LATEST REVISION DATE

APPROVED BY BRIDGE ENGINEER

IOWA DOT Highway Division

STANDARD DESIGN - 40' ROADWAY, THREE SPAN BRIDGE

PRETENSIONED PRESTRESSED CONCRETE BEAM BRIDGES

SEPTEMBER, 2014

ABUTMENT BACKFILL DETAILS

C BEAMS - 0° SKEW

H40-94-14

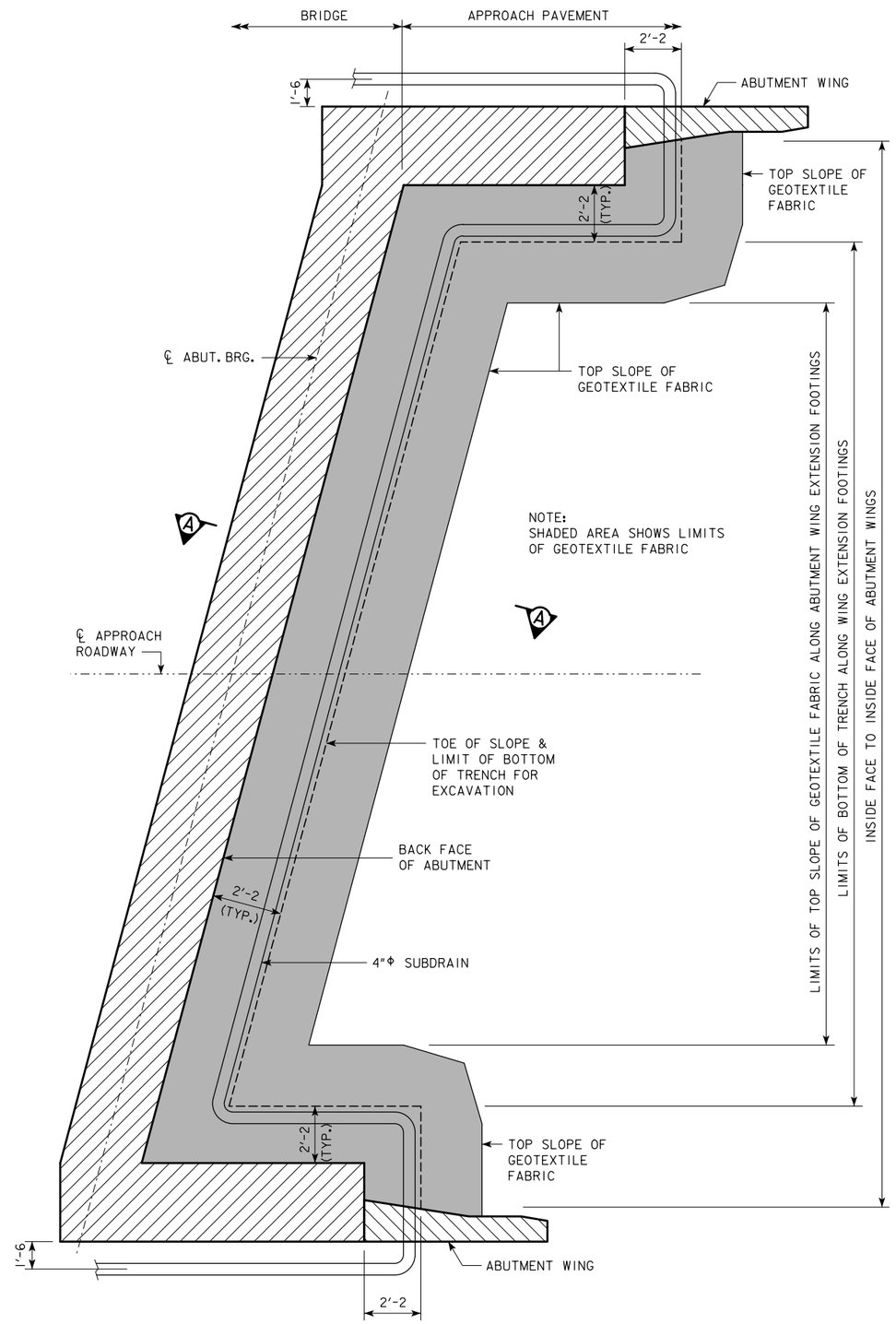

SKEWED ABUTMENT PLAN WITH WING EXTENSIONS

(SKEWED LEFT AHEAD SHOWN, SKEWED RIGHT AHEAD SIMILIAR)

ABUTMENT BACKFILL PROCESS:

THE BASE OF THE EXCAVATION SUBGRADE BEHIND THE ABUTMENT IS TO BE GRADED WITH A 4% SLOPE AWAY FROM THE ABUTMENT FOOTING AND A 2% CROSS SLOPE IN THE DIRECTION OF THE SUBDRAIN OUTLET. THIS EXCAVATION SHAPING IS TO BE DONE PRIOR TO BEGINNING INSTALLATION OF THE GEOTEXTILE AND BACKFILL MATERIAL.

AFTER THE SUBGRADE HAS BEEN SHAPED, THE GEOTEXTILE FABRIC SHALL BE INSTALLED IN ACCORDANCE WITH THE DETAILS SHOWN. THE FABRIC IS INTENDED TO BE INSTALLED IN THE BASE OF THE EXCAVATION AND EXTENDED VERTICALLY UP THE ABUTMENT BACKWALL, ABUTMENT WING WALLS, AND EXCAVATION FACE TO A HEIGHT THAT WILL BE APPROXIMATELY 1 TO 2 FOOT HIGHER THAN THE HEIGHT OF THE POROUS BACKFILL PLACEMENT AS SHOWN IN THE "BACKFILL DETAILS" ON THIS SHEET. THE STRIPS OF THE FABRIC PLACED SHALL OVERLAP APPROXIMATELY 1 FOOT AND SHALL BE PINNED IN PLACE. THE FABRIC SHALL BE ATTACHED TO THE ABUTMENT BY USING LATH FOLDED IN THE FABRIC AND SECURED TO THE CONCRETE WITH SHALLOW CONCRETE NAILS. THE FABRIC PLACED AGAINST THE EXCAVATION FACE SHALL BE PINNED.

WHEN THE FABRIC IS IN PLACE, THE SUBDRAIN SHALL BE INSTALLED DIRECTLY ON THE FABRIC AT THE TOE OF THE REAR EXCAVATION SLOPE. A SLOT WILL NEED TO BE CUT IN THE FABRIC AT THE POINT WHERE THE SUBDRAIN EXITS THE FABRIC NEAR THE END OF THE ABUTMENT WING WALL.

POROUS BACKFILL IS THEN PLACED AND LEVELED, NO COMPACTION IS REQUIRED.

THE REMAINING WORK INVOLVES BACKFILLING WITH FLOODABLE BACKFILL, SURFACE FLOODING, AND VIBRATORY COMPACTION. THE FLOODABLE BACKFILL MATERIAL SHALL BE IN ACCORDANCE WITH THE STANDARD SPECIFICATIONS. THE FLOODABLE BACKFILL SHALL BE PLACED IN INDIVIDUAL LIFTS, SURFACE FLOODED, AND COMPACTED WITH VIBRATORY COMPACTION TO ENSURE FULL CONSOLIDATION. LIMIT THE LOOSE LIFTS TO NO MORE THAN 2 FEET OF THICKNESS.

START SURFACE FLOODING FOR EACH FLOODABLE BACKFILL LIFT AT THE HIGH POINT OF THE SUBDRAIN AND PROGRESS TO THE LOW POINT WHERE THE SUBDRAIN EXITS THE FABRIC. TO ENSURE UNIFORM SURFACE FLOODING, WATER RUNNING FULL IN A 2-INCH DIAMETER HOSE SHOULD BE SPRAYED IN SUCCESSIVE 6-FOOT TO 8-FOOT INCREMENTS FOR 5 MINUTES WITHIN EACH INCREMENT.

FLOODABLE BACKFILL LIFT PLACEMENT, FLOODING, AND COMPACTION SHALL PROGRESS UNTIL THE REQUIRED FULL THICKNESS OF THE ABUTMENT BACKFILL HAS BEEN COMPLETED.

WATER REQUIRED FOR FLOODING, SUBDRAINS, POROUS BACKFILL, FLOODABLE BACKFILL, AND GEOTEXTILE FABRIC FURNISHED AT THE BRIDGE ABUTMENTS WILL NOT BE MEASURED SEPARATELY FOR PAYMENT.

THE COST OF WATER REQUIRED FOR FLOODING, SUBDRAINS, POROUS BACKFILL, FLOODABLE BACKFILL, AND GEOTEXTILE FABRIC FURNISHED AT THE BRIDGE ABUTMENTS SHALL BE INCLUDED IN THE CONTRACT UNIT PRICE BID FOR STRUCTURAL CONCRETE.

NOTE:
SEE SUBDRAIN DETAILS SHEET FOR DETAILS NOT SHOWN ON THIS SHEET WHICH ARE PERTINENT TO THIS STRUCTURE.

NOTE:

SUBDRAIN SHALL SLOPE DOWNWARD 2% FROM ℄ APPROACH ROADWAY WHEN OUTLETTING BOTH SIDES OF THE ABUTMENT.

SUBDRAIN SHALL SLOPE DOWNWARD 2% FROM HIGH END WHEN OUTLETTING AT ONE END OF THE ABUTMENT.

THE GEOTEXTILE FABRIC SHALL BE IN ACCORDANCE WITH ARTICLE 4196.01, B, 6 OF THE STANDARD SPECIFICATIONS. IF THE ENGINEERING FABRIC IS LAPPED THE LAPS SHALL BE A MINIMUM OF ONE FOOT IN LENGTH, SHINGLE FASHION WITH UP SLOPE LAP PIECE ON TOP AND STAPLED FOR CONTINUITY.

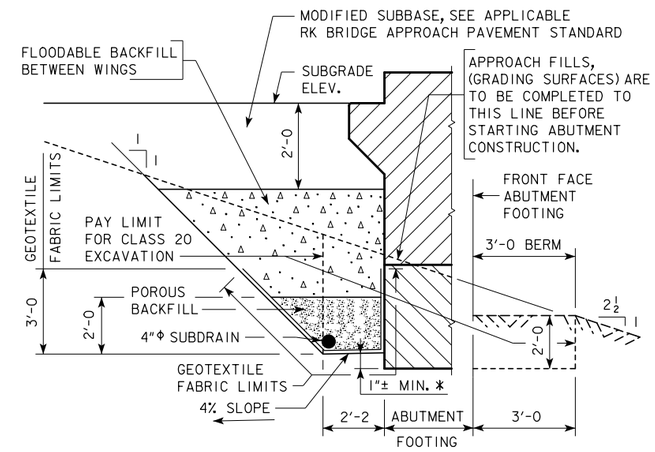

SECTION A-A

BACKFILL DETAILS

NOTE: GEOTEXTILE FABRIC WILL BE ATTACHED TO FACE OF ABUTMENT FOOTING AND WINGS.

* DIMENSION VARIES DUE TO 2% SUBDRAIN SLOPE.

LATEST REVISION DATE

APPROVED BY BRIDGE ENGINEER

IOWA DOT Highway Division

STANDARD DESIGN - 40' ROADWAY, THREE SPAN BRIDGE

PRETENSIONED PRESTRESSED CONCRETE BEAM BRIDGES

SEPTEMBER, 2014

ABUTMENT BACKFILL DETAILS

C BEAMS - SKEWED

H40-95-14