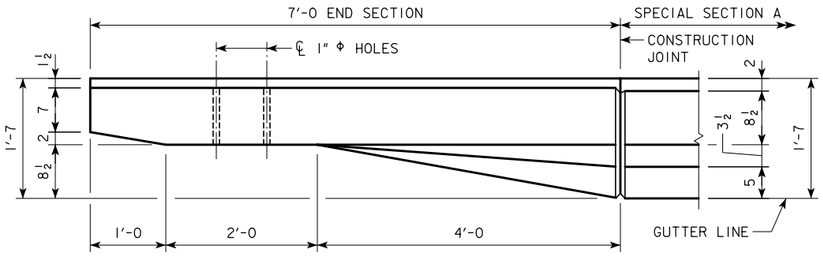

PART PLAN VIEW
(AESTHETIC PROJECTION NOT SHOWN)

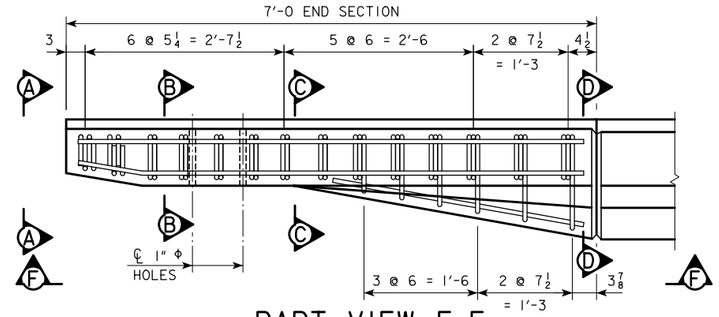

PART VIEW E-E
(AESTHETIC PROJECTION NOT SHOWN)

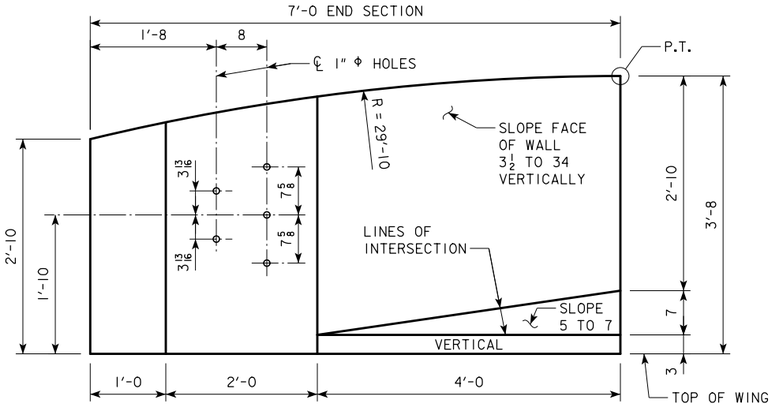

PART ELEVATION VIEW
PROVIDE 5 HOLES FORMED WITH 1" Φ PLASTIC CONDUIT. COST TO BE INCLUDED IN PRICE BID FOR "CONCRETE BARRIER RAILING, AESTHETIC".

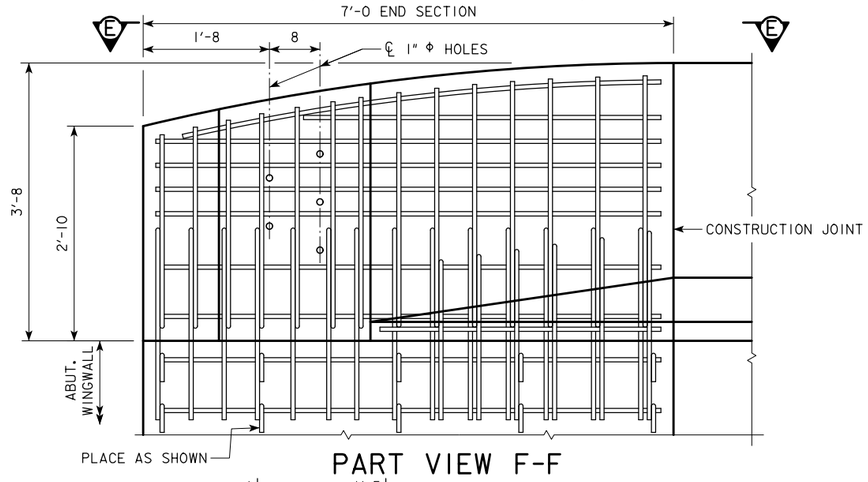

PART VIEW F-F

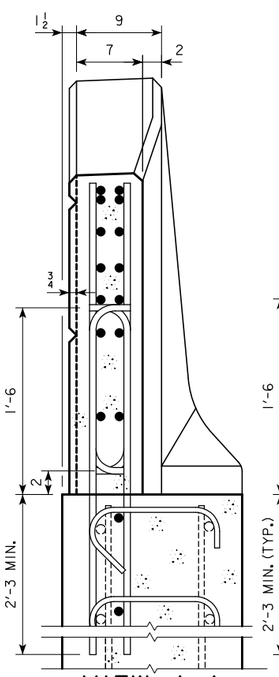

VIEW A-A

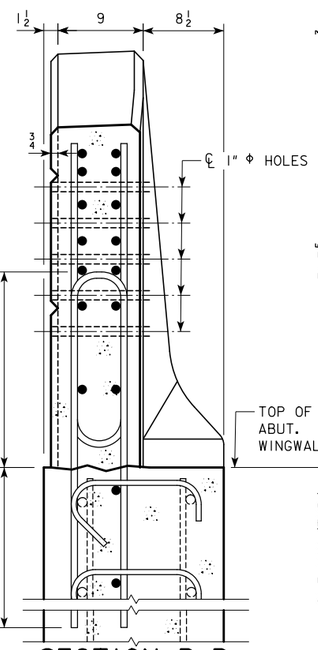

SECTION B-B

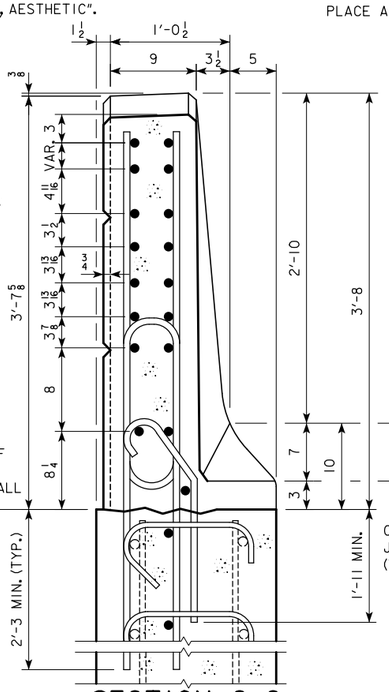

SECTION C-C

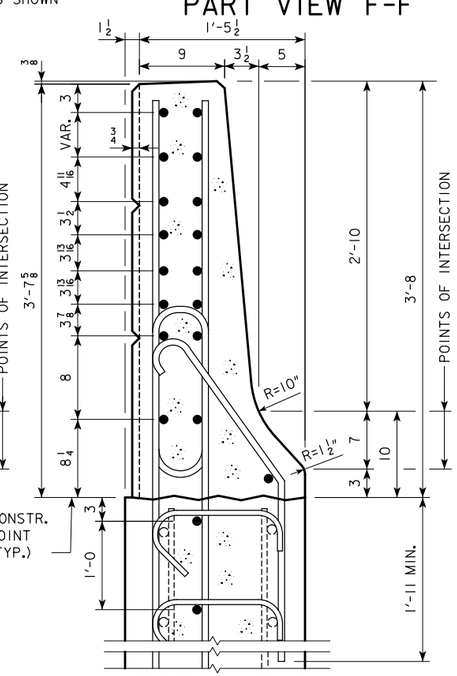

SECTION D-D

NOTE:
CONSTRUCTION JOINT BETWEEN TOP OF WINGWALL AND BARRIER RAIL IS ROUGHENED CONCRETE.

NOTE:
THE 10" RADIUS AND 1½" RADIUS ARE TYPICAL AND SHALL BE USED WHEN CONSTRUCTING THE CORNERS FOR VIEW A-A, SECTION B-B, SECTION C-C AND SECTION D-D.

NOTE:
DASHED LINES BELOW THE TOP OF WINGWALL ARE THE ABUTMENT WINGWALL REINFORCING STEEL. SEE DIGITAL FILES FOR PLACEMENT.

DESIGN FOR 0° SKEW ON 3,300' RADIUS CURVE

566'-6 X VARIES CONTINUOUS WELDED GIRDER BRIDGE

171'-0, 226'-0, 169'-6 SPANS

BARRIER RAIL END SECTION DETAILS

STA. 2543+48.27 (℄ RAMP B) APRIL 2018

JOHNSON COUNTY

IOWA DEPARTMENT OF TRANSPORTATION - HIGHWAY DIVISION

DESIGN SHEET NO. 26 OF 31 FILE NO. 30864 DESIGN NO. 420

ENGLISHDECKRAILBRIDGES.DGN 1017S - THIS SHEET ISSUED 04-14 - ADDED STAINLESS STEEL REINFORCING BAR LIST AND CHANGED 6c3, 6c4 & 5c5-10 BARS TO STAINLESS STEEL.