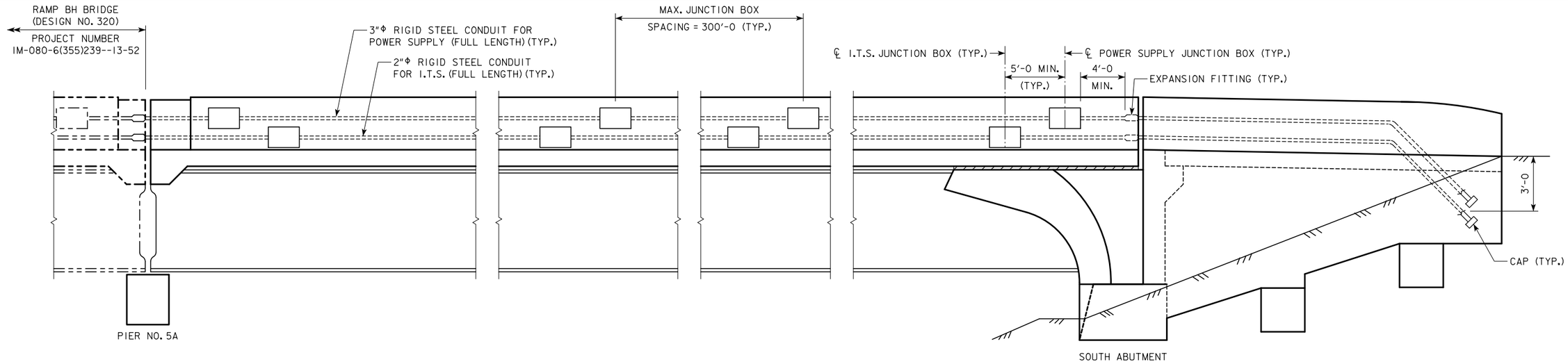

EXTERIOR ELEVATION - RIGHT BARRIER RAIL

(NO CONDUIT REQUIRED IN LEFT BARRER RAIL)

LIGHTING NOTES:

SEE LI-104 STANDARD ROAD PLAN FOR ADDITIONAL INFORMATION ON JUNCTION BOXES.

CONSTRUCTION SHALL CONFORM TO THE CURRENT IOWA D.O.T. STANDARD AND SUPPLEMENTAL SPECIFICATIONS AND SPECIAL PROVISIONS.

ALL RIGID STEEL CONDUIT SHALL BE GALVANIZED AND CONDUIT INSTALLATION SHALL BE IN ACCORDANCE WITH ARTICLE 2523.03, N, OF THE STANDARD SPECIFICATIONS.

ALL "C" ENTRANCE HOLES IN JUNCTION BOXES SHALL BE DRILLED AND TAPPED FOR THE SPECIFIED CONDUIT SIZE. ALL OTHER HOLES SHALL HAVE A CONCRETE - TIGHT SLIP FIT. CONDUIT ENDS SHALL NOT PROTRUDE INTO JUNCTION BOX MORE THAN $\frac{1}{4}$". DRAIN PIPE END SHALL BE FLUSH WITH INSIDE SURFACE OF BOX. GROUNDING BUTTONS SHALL BE LOCATED APPROXIMATELY 3" FROM THE INSIDE SURFACE OF THE BOX WALL, AND NOT CLOSER THAN 3" TO THE EDGE OF ANY HOLE IN THE BOX FLOOR. HOLES FOR DRAIN PIPE SHALL BE PLACED IN THE LOW CORNER OF THE BOX, WITH A MINIMUM CLEARANCE OF 1" BETWEEN THE EDGE OF THE HOLE AND THE INSIDE SURFACE OF THE BOX WALL. TYPICAL DETAILS ARE SHOWN ON THIS SHEET.

THE RIGID STEEL CONDUIT, JUNCTION BOXES AND FITTINGS INCLUDING LABOR AND ANY ADDITIONAL WORK TO DO THE INSTALLATION IS CONSIDERED INCIDENTAL TO THE COST OF THE RAILING.

EXPANSION FITTING SHALL BE AS SPECIFIED OR AS APPROVED BY THE ENGINEER. TYPICAL DETAILS ARE SHOWN ON THIS SHEET.

STAINLESS-STEEL REINFORCEMENT SHALL NOT BE ALLOWED TO BE IN CONTACT WITH THE UNCOATED REINFORCEMENT, BARE METAL FORMING HARDWARE, OR TO GALVANIZED ATTACHMENTS OR GALVANIZED CONDUIT.

ALL CONDUIT SHALL INCLUDE A POLYPROPYLENE PULL ROPE BETWEEN JUNCTION BOXES WITH A MINIMUM 600 POUND TENSILE STRENGTH.

I.T.S CONDUIT NOTES:

SEE LI-104 STANDARD ROAD PLAN FOR ADDITIONAL INFORMATION ON JUNCTION BOXES.

I.T.S. CONDUIT SHALL BE LIMITED TO SIX 45° ELBOW BENDS FOR A CABLE PULL FROM HANDHOLE TO HANDHOLE.

RIGID STEEL CONDUIT FOR I.T.S. APPLICATIONS SHALL BE GALVANIZED AND INSTALLED AND PREPARED TO FACILITATE INSTALLATION OF FIBER OPTIC CABLE.

THE MINIMUM INSIDE BEND RADIUS FOR RIGID STEEL CONDUIT USED FOR I.T.S. APPLICATIONS SHALL BE 18".

RIGID STEEL CONDUIT FOR I.T.S. APPLICATIONS SHALL BE CUT AND THREADED TO ELIMINATE EXPOSED THREADS AFTER COMPLETING THE CONNECTIONS; ALL COUPLINGS SHALL BE TIGHTENED UNTIL THE CONDUIT ENDS MEET TO ALLOW A CONTINUOUS INNER SURFACE THROUGHOUT THE ENTIRE LENGTH OF THE CONDUIT RUN. NIPPLES SHOULD BE USED TO ELIMINATE CUTTING AND THREADING SHORT LENGTHS OF CONDUIT.

ALL BURRS AND ROUGHENED SURFACES SHALL BE REMOVED FROM CONDUITS AND FITTINGS. ALL CONDUIT RUNS SHALL BE REAMED, CLEANED AND SWABBED FOR INSTALLATION OF FIBER OPTIC CABLE.

ONLY GALVANIZED FITTINGS SHALL BE USED WITH RIGID STEEL CONDUIT. DAMAGED GALVANIZED SURFACES OF RIGID STEEL CONDUIT OR FITTINGS SHALL BE PAINTED WITH AN ACCEPTABLE ZINC-RICH PAINT.

I.T.S. CONDUIT SHALL INCLUDE A POLYPROPYLENE PULL ROPE BETWEEN HANDHOLES WITH A MINIMUM 600 POUND TENSILE STRENGTH.

I.T.S. RIGID STEEL CONDUIT, PULL ROPES AND FITTINGS, INCLUDING LABOR AND ANY ADDITIONAL WORK FOR INSTALLATION IS CONSIDERED INCIDENTAL TO THE COST OF THE RAILING.

BOSSED FOR	HOLE	FOR CONDUIT SIZE
5 THREADS	C	2"Φ OR 3"Φ RIGID STEEL
NONE	D	$\frac{1}{2}$"Φ COPPER PIPE

NOTE:
THE GROUNDING BUTTONS ARE TO BE BLIND DRILLED AND TAPPED FOR $\frac{3}{8}$"Φ x 0'-0$\frac{3}{4}$ BOLTS.

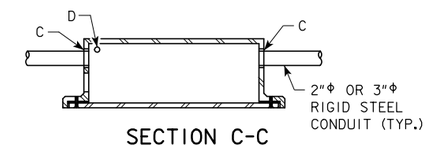

SECTION C-C

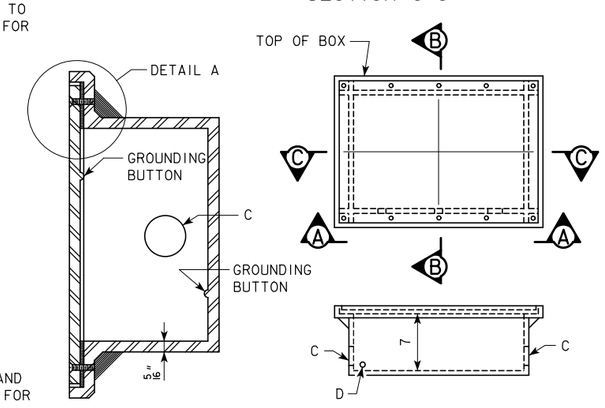

SECTION B-B VIEW A-A

LI-104, TYPE I JUNCTION BOX

WATERTIGHT, CAST IRON - FLUSH MOUNT

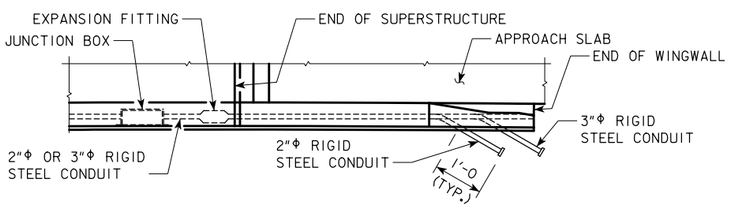

PART PLAN AT WINGWALL

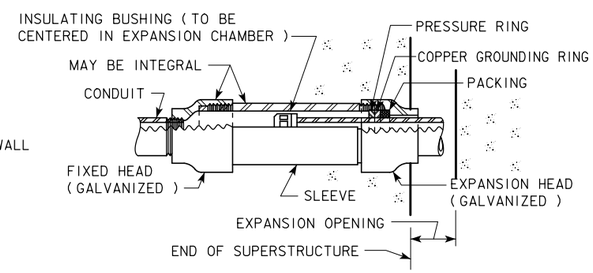

EXPANSION CHAMBER LENGTH IS TO ACCOMODATE THE FOLLOWING MOVEMENTS:
• 2" EACH WAY AT SOUTH ABUTMENT EXPANSION JOINTS (2 REQUIRED)

EXPANSION FITTING DETAIL

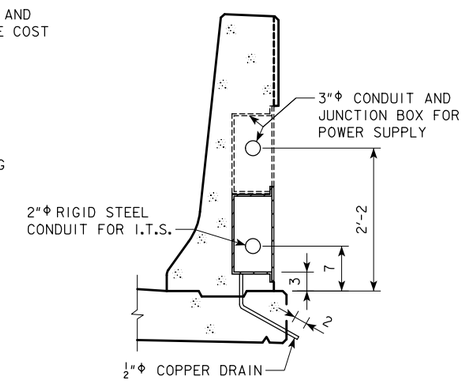

SECTION THRU JUNCTION BOX

DESIGN FOR 0° SKEW ON 3,300' RADIUS CURVE

566'-6 X VARIES CONTINUOUS WELDED GIRDER BRIDGE

171'-0, 226'-0, 169'-6 SPANS

LIGHTING & I.T.S. CONDUIT DETAILS

STA. 2543+48.27 (℄ RAMP B) APRIL 2018

JOHNSON COUNTY

IOWA DEPARTMENT OF TRANSPORTATION - HIGHWAY DIVISION

DESIGN SHEET NO. 27 OF 31 FILE NO. 30864 DESIGN NO. 420