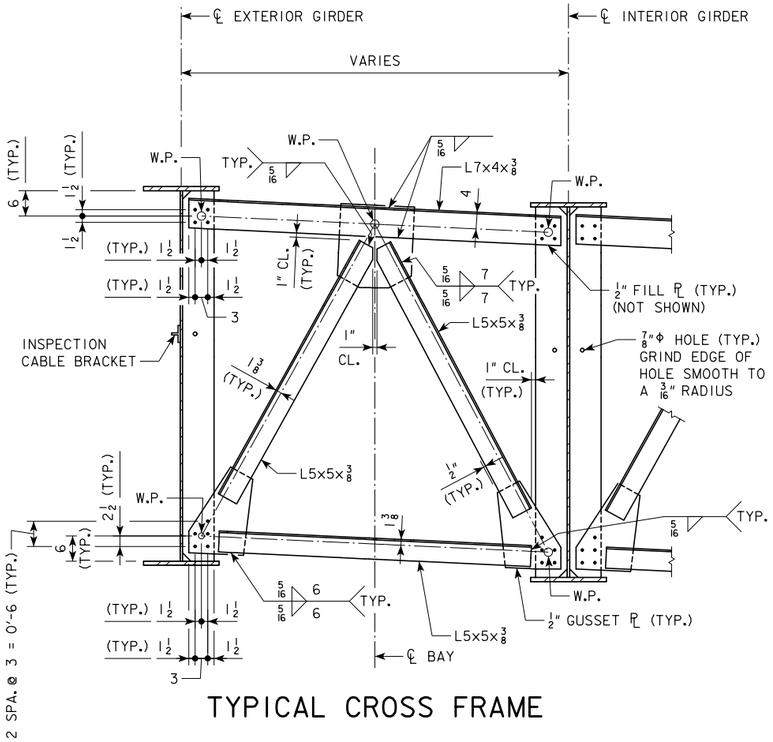

TYPICAL CROSS FRAME

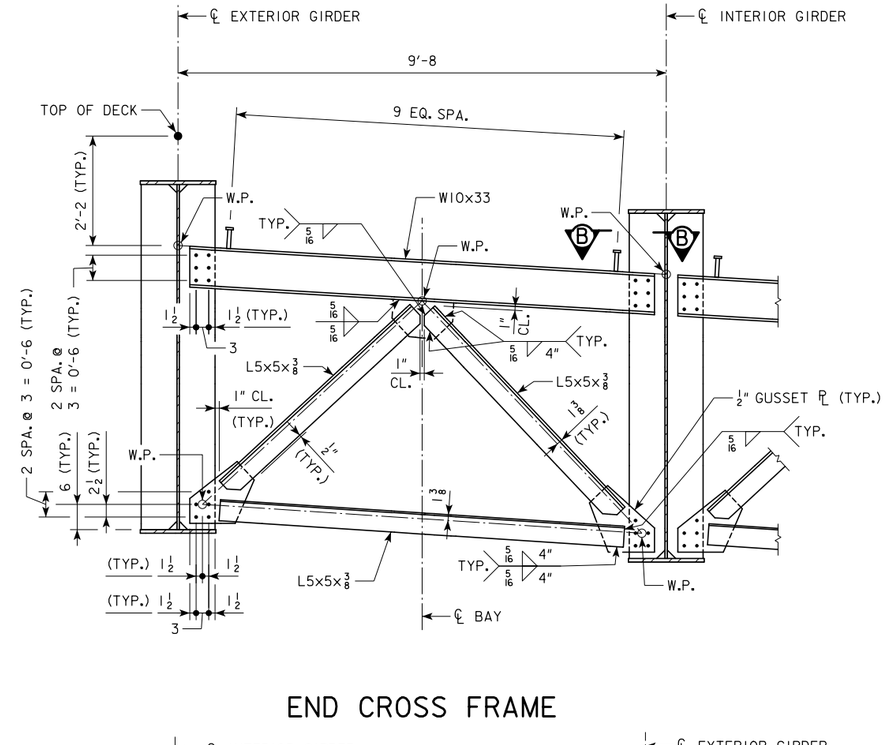

END CROSS FRAME

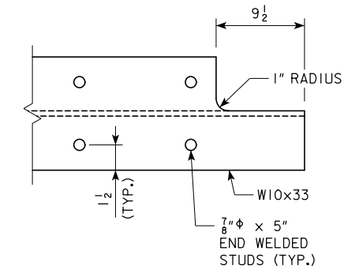

SECTION B-B

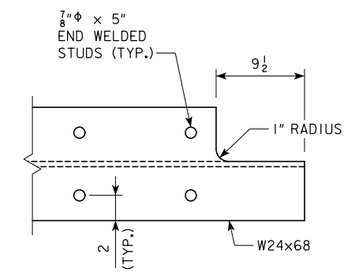

SECTION C-C

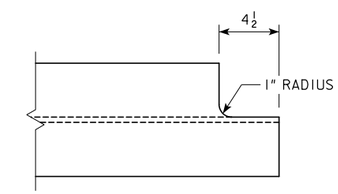

SECTION D-D

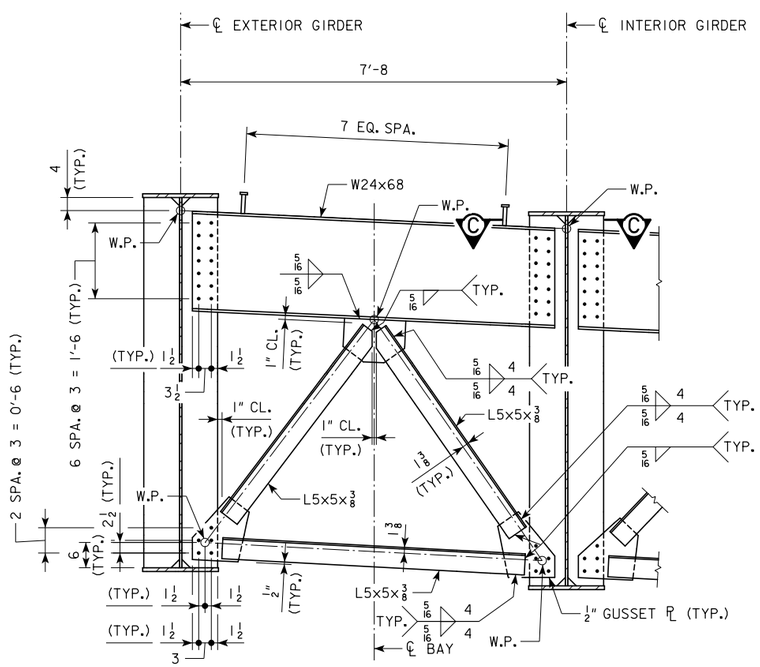

ABUTMENT CROSS FRAME

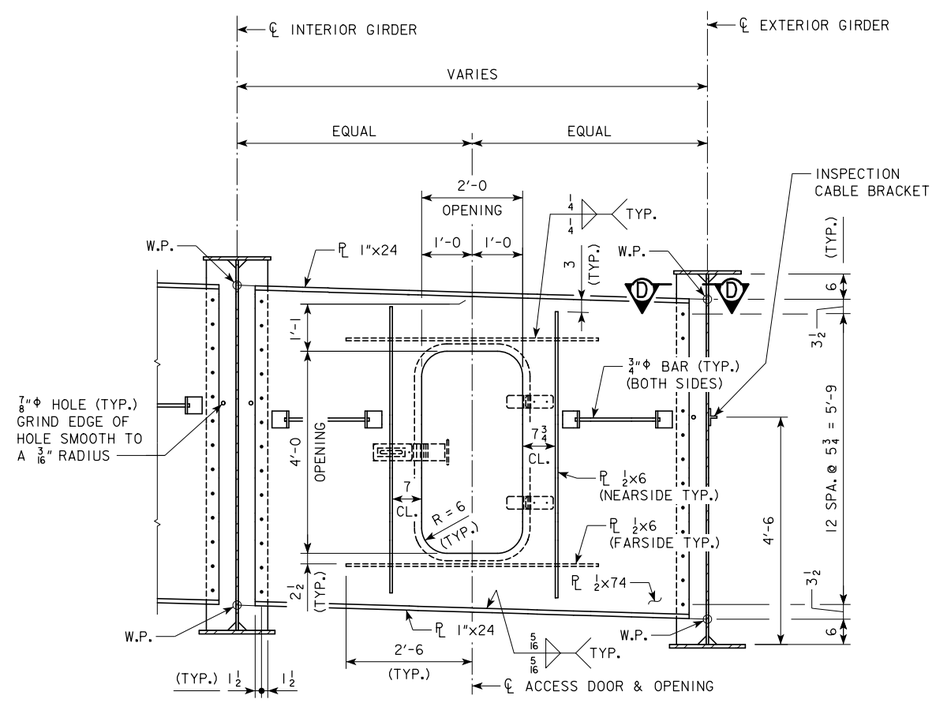

DIAPHRAGM
(LOOKING AHEAD STATION)

NOTE:
FOR ACCESS DOOR AND 3/4"Φ BAR DETAILS, SEE DESIGN SHEET 33.

NOTES:
FOR EDGE CLEARANCES NOT SHOWN, AASHTO CRITERIA SHALL BE USED.
ALL BOLTS SHALL HAVE THREADS EXCLUDED FROM THE SHEAR PLANE.

DESIGN FOR 0° SKEW ON 3,300' RADIUS CURVE

566'-6 X VARIES CONTINUOUS WELDED GIRDER BRIDGE

171'-0, 226'-0, 169'-6 SPANS

CROSS FRAME DETAILS

STA. 2543+48.27 (℄ RAMP B) APRIL 2018

JOHNSON COUNTY

IOWA DEPARTMENT OF TRANSPORTATION - HIGHWAY DIVISION

DESIGN SHEET NO. 15 OF 31 FILE NO. 30864 DESIGN NO. 420

DESIGN TEAM TLP/GMS/EES JOHNSON COUNTY PROJECT NUMBER IM-080-6(355)239--13-52 SHEET NUMBER 257