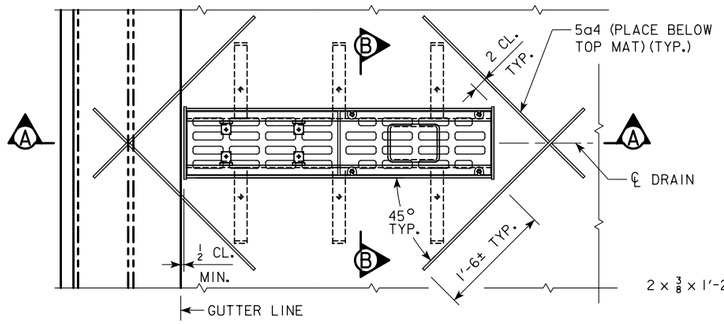

PART PLAN AT DRAIN

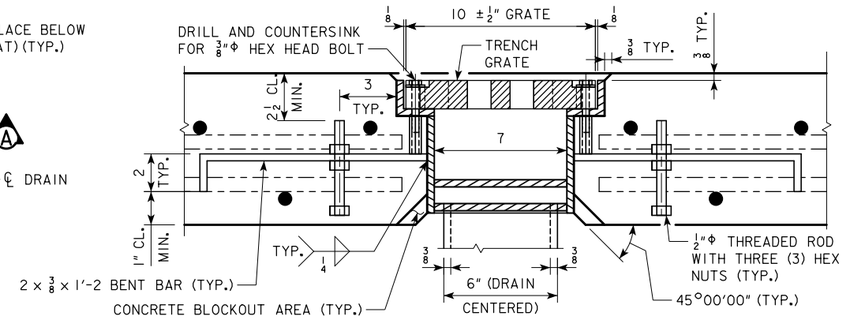

PART SECTION B-B - SHOWING DTL. B OPTION

(DETAIL IS SHOWN USING 10" WIDE GRATE)

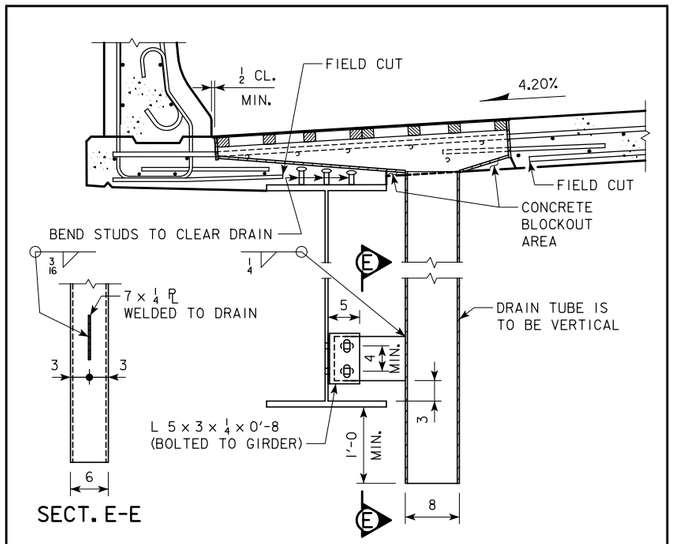

SECT. E-E

PART SECTION A-A

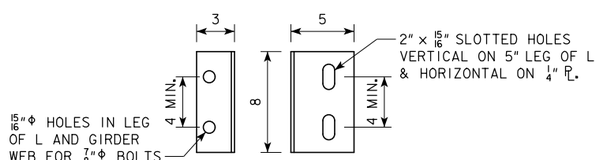

L 5 × 3 × ¼ × 0'-8 DETAIL

DRAIN NOTES

THE DRAINS SHALL BE ⅜ INCH THICK STEEL. THE DRAIN ASSEMBLIES SHALL BE GALVANIZED AFTER FABRICATION. THE BID ITEM "DECK DRAIN" SHALL INCLUDE ALL COSTS ASSOCIATED WITH FABRICATING AND INSTALLING THE DECK DRAINS AS PER PLAN.

THE DRAIN TRENCH GRATES SHALL BE FERROUS CASTINGS. METAL USED IN THE MANUFACTURE OF CASTINGS SHALL CONFORM TO ASTM A48-83 CLASS 35B OR BETTER GRAY IRON CASTINGS IN ACCORDANCE WITH CURRENT IOWA D.O.T. STANDARD SPECIFICATIONS. FINISH OF CASTINGS SHALL BE SMOOTH AND FREE OF DEFECTS. TRENCH GRATES SHALL BE CAPABLE OF CARRYING AASHTO HL-93 LOADING. GALVANIZING OF THE TRENCH GRATES IS NOT REQUIRED.

DRAINS SHALL BE CENTERED OVER THE NEAREST BOTTOM TRANSVERSE DECK REINFORCING BAR FROM THE LOCATION DESIGNATED IN THE TABLE OF DECK DRAINS. THE BOTTOM TRANSVERSE DECK REINFORCING BAR SHALL BE CUT OFF TO PROVIDE 1 INCH CLEARANCE FROM THE DRAIN. THE TOP TRANSVERSE DECK REINFORCING BARS ON EACH SIDE OF THE DRAIN, SHALL BE SPACED AS NECESSARY TO PROVIDE 1 INCH CLEARANCE FROM THE DRAIN. LONGITUDINAL DECK REINFORCING BARS THAT CONFLICT WITH THE DRAIN SHALL BE CUT OFF TO PROVIDE 2 INCH CLEARANCE FROM THE DRAIN. ALL CUT ENDS OF BARS SHALL BE COATED WITH EPOXY PATCHING MATERIAL SUPPLIED BY THE MANUFACTURER OF THE EPOXY COATING. LONGITUDINAL DECK REINFORCING BARS SHALL BE SHIFTED AS NECESSARY TO ACCOMMODATE ANCHOR BARS.

MATERIALS

PLATES, BARS, THREADED RODS AND ANGLES SHALL MEET THE REQUIREMENTS ASTM A709 GRADE 36. THE TUBE STEEL SHALL MEET THE REQUIREMENTS ASTM A500 GRADE B.

⅜"Φ MECHANICALLY GALVANIZED STEEL FLAT HEAD SCREW SHALL MEET THE REQUIREMENTS OF ASTM B695-04 (2009) AND ASTM F835-12.

⅜"Φ MECHANICALLY GALVANIZED STEEL HEX HEAD BOLT AND HEX NUT SHALL MEET THE REQUIREMENTS OF ASTM B695-04 (2009) AND ASTM A307-12 GRADE A.

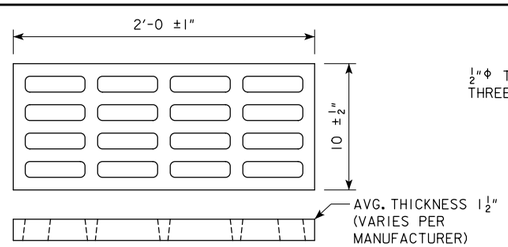

DRAIN TRENCH GRATE DETAILS

(2 GRATES REQUIRED PER DRAIN)

NOTE: PATTERN AND DIRECTION OF GRATE OPENINGS SHALL BE SIMILAR TO THE PATTERN SHOWN.

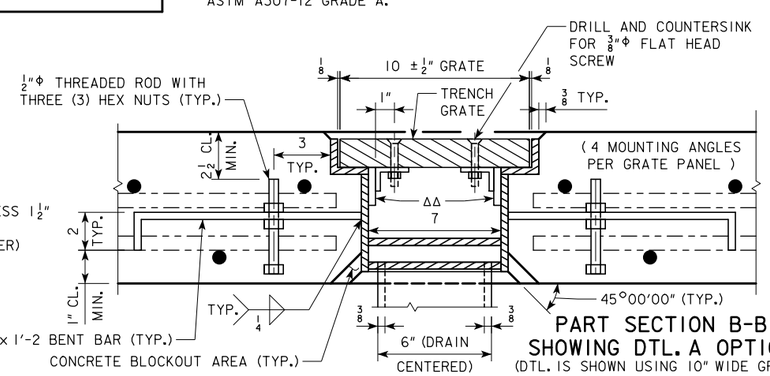

PART SECTION B-B SHOWING DTL. A OPTION

(DTL. IS SHOWN USING 10" WIDE GRATE)

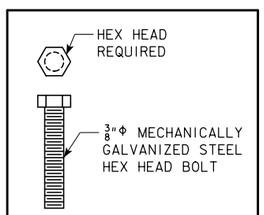

HEX HEAD BOLT DETAIL

(USED FOR DETAIL B)

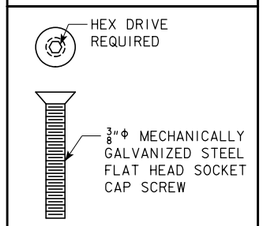

FLAT HEAD SCREW DETAIL

(USED FOR DETAIL A)

ΔΔ = ADJUST SHIM PLATE ACCORDING TO WIDTH OF GRATE.

* = DEPTH BASED ON TRENCH GRATE MANUFACTURER.

Δ = L 1¾ × 1¼ × ¼ × 0'-1½ LONG (TYP. - SEE DETAIL A).

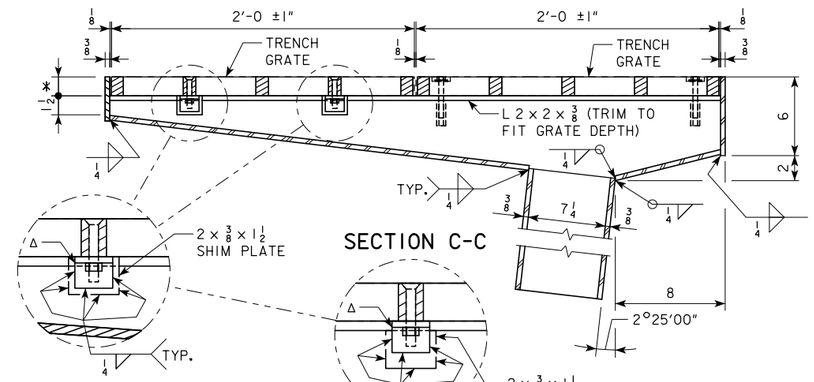

SECTION C-C

(SHOWING SHIM PLATE PLACEMENT WITH A GRATE 10" WIDE OR MORE. SEE DETAIL A.)

(SHOWING SHIM PLATE PLACEMENT WITH A GRATE LESS THAN 10" WIDE. SEE DETAIL A.)

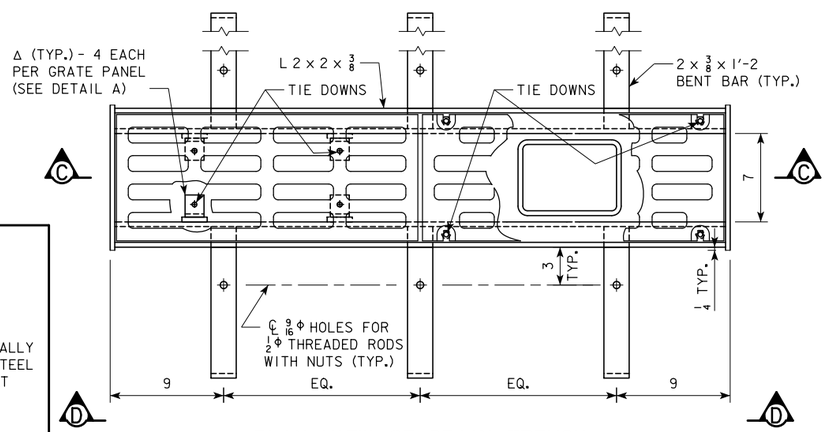

PLAN VIEW OF DRAIN TRENCH

(GRATE TIE DOWNS SHOW BOTH DETAIL A AND DETAIL B)

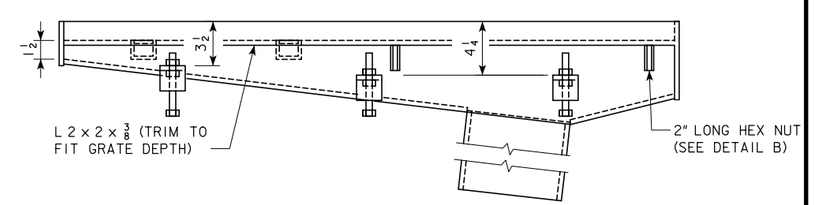

SIDE VIEW D-D

NOTE: 4 DRAINS REQUIRED.

DESIGN FOR 0° SKEW ON 3,300' RADIUS CURVE

566'-6 X VARIES CONTINUOUS WELDED GIRDER BRIDGE

171'-0, 226'-0, 169'-6 SPANS

DRAINAGE DETAILS

STA. 2543+48.27 (℄ RAMP B) APRIL 2018

JOHNSON COUNTY

IOWA DEPARTMENT OF TRANSPORTATION - HIGHWAY DIVISION

DESIGN SHEET NO. 24 OF 31 FILE NO. 30864 DESIGN NO. 420

REVISED 07-13 - THE STAINLESS STEEL ⅜" CAP SCREWS AND HEX HEAD BOLT WERE CHANGED TO MECHANICALLY GALANIZED.
REVISED 10-2016 - ADDED ¼" FILLET WELD CALLOUT TO DRAIN TUBE IN "PART SECTION A-A" STEEL BEAM DETAIL.
REVISED 06-2017 - SHEET IS REDRAWN TO ACCOMODATE THE USE OF A 6" × 8" × ⅜" DRAIN TUBE. (WAS 8" DIA. × ⅜" STRUCTURAL DRAIN TUBE MAY BE SUBSTITUTED WITH A 8" × 8" × ⅜" STRUCTURAL TUBE).
ENGLISHMISCELLANEOUSBRIDGES.DGN 1054 - THIS SHEET REDRAWN 11-00.