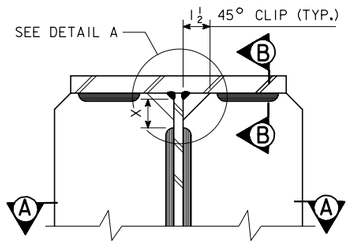

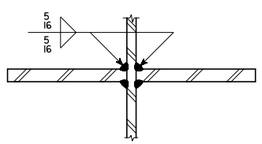

SECTION A-A
(TYPICAL)

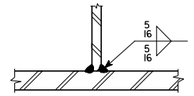

SECTION B-B

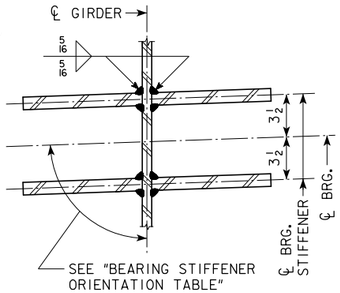

SECTION A-A
(PIER 5A)

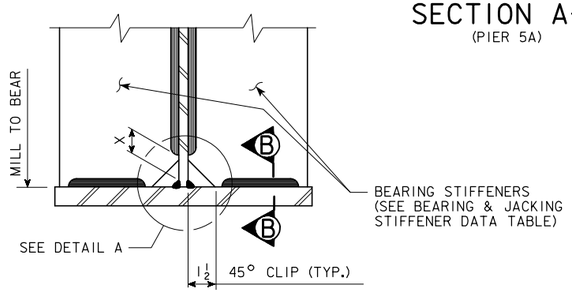

BEARING & JACKING STIFFENER

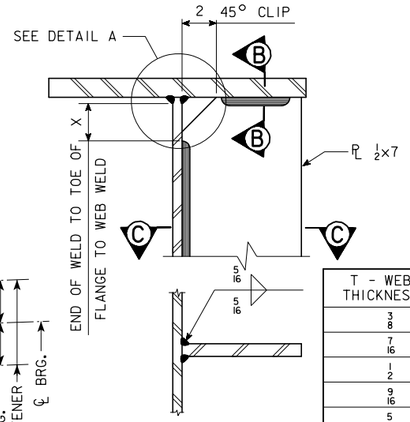

SECTION C-C

T - WEB THICKNESS	X = 5T WITH 2¼" MINIMUM
3/8	2¼
7/16	2¼
1/2	2½
9/16	2 13/16
5/8	3⅛
11/16	3 7/16
3/4	3¾

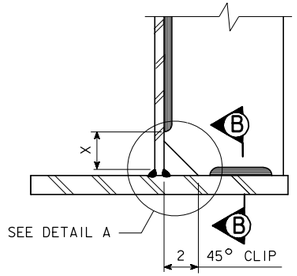

CROSS FRAME OR DIAPHRAGM STIFFENER

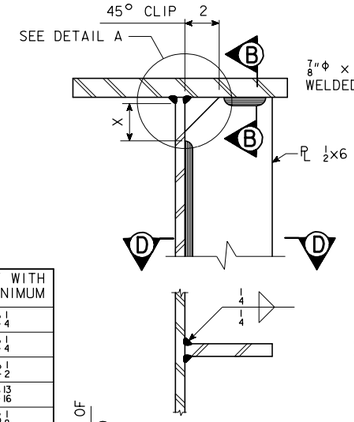

SECTION D-D

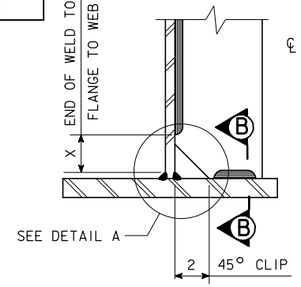

INTERMEDIATE STIFFENER

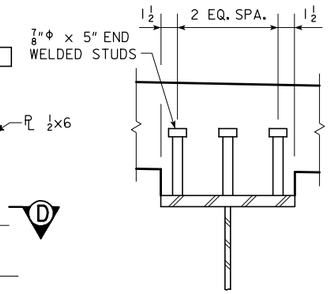

SHEAR STUD DETAIL

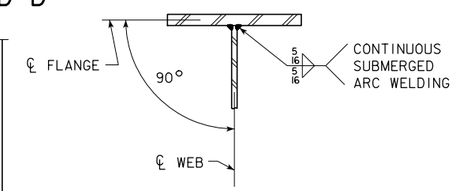

FLANGE TO WEB WELD DETAIL

BEARING STIFFENER ORIENTATION TABLE	
GIRDER	PIER NO. 5A ◐
A	-4°00'45"
B	-2°50'26"
C	-2°01'08"
D	-0°01'34"

◐ FOR DETAILS, SEE DETAIL B.

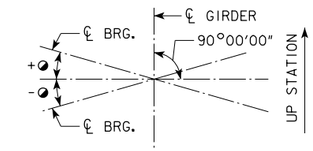

DETAIL B

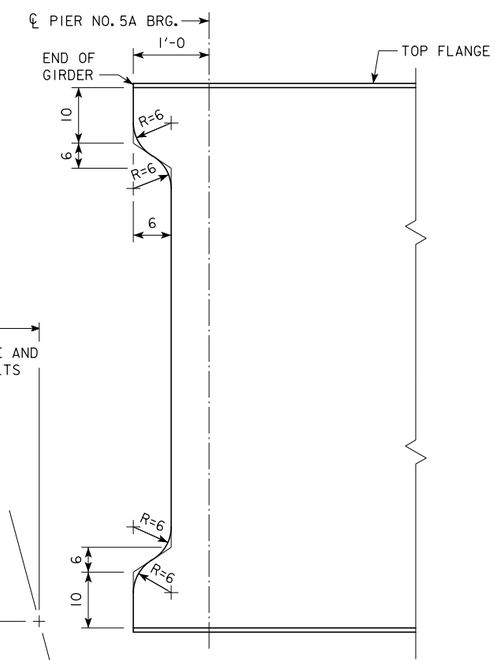

GIRDER END COPE DETAIL

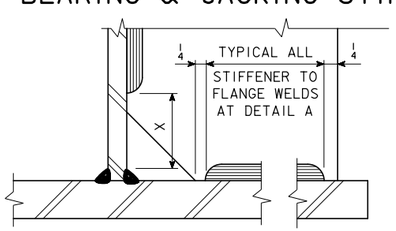

DETAIL A

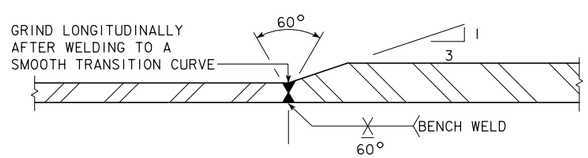

FLANGE PLATE TRANSITION AT SHOP SPLICES

ALL FLANGE BUTT WELDED JOINTS SUBJECT TO TENSION OR REVERSAL OF STRESS ARE TO BE RADIOGRAPHED FULL WIDTH. ALL BUTT WELDED JOINTS SUBJECT TO COMPRESSION ONLY ARE TO BE RADIOGRAPHED FOR A MINIMUM OF 50 PERCENT OF THE WIDTH.
FOR TENSION AND COMPRESSION LIMITS OF GIRDERS, SEE GIRDER ELEVATIONS.

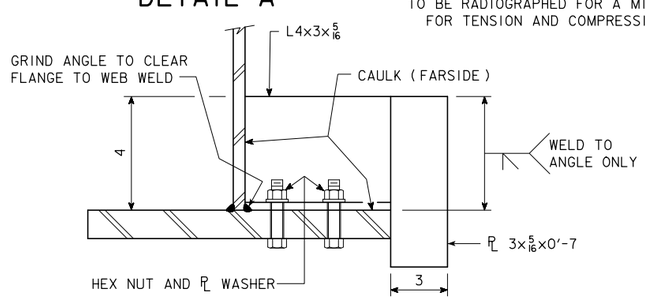

SECTION G-G

FLANGE DEFLECTORS ARE REQUIRED ON THE OUTSIDE OF THE EXTERIOR GIRDERS AT THE ABUTMENT AND PIERS AS SHOWN ON THE STRUCTURAL STEEL LAYOUT.
FLANGE DEFLECTOR COMPONENTS ARE TO BE PAINTED IN ACCORDANCE WITH STANDARD SPECIFICATIONS.
GRADE 50W "WEATHERING STEEL" MAY BE USED IN LIEU OF PAINTED GRADE 36 STEEL FOR FLANGE DEFLECTORS.

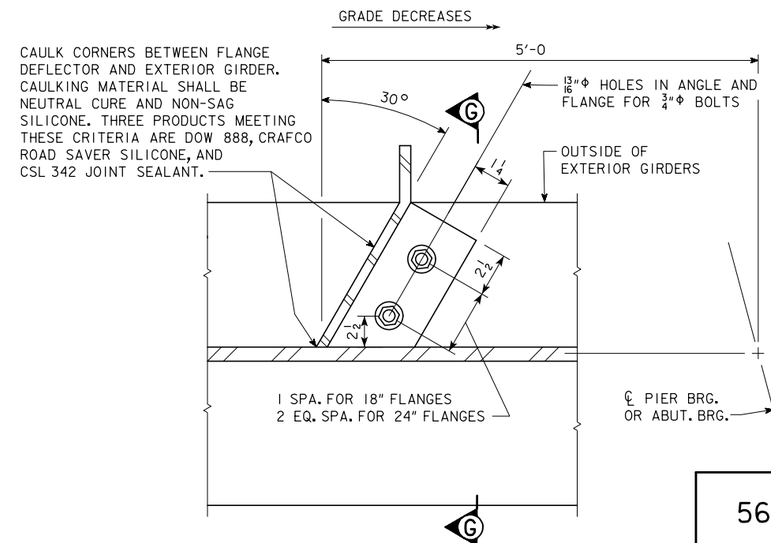

FLANGE DEFLECTOR DETAILS
(6 REQUIRED)

DESIGN FOR 0° SKEW ON 3,300' RADIUS CURVE

566'-6 X VARIES CONTINUOUS WELDED GIRDER BRIDGE

171'-0, 226'-0, 169'-6 SPANS

WELDING DETAILS

STA. 2543+48.27 (℄ RAMP B) APRIL 2018

JOHNSON COUNTY

IOWA DEPARTMENT OF TRANSPORTATION - HIGHWAY DIVISION

DESIGN SHEET NO. 14 OF 31 FILE NO. 30864 DESIGN NO. 420