BARRIER PLATE NOTE:

THE MATERIAL USED FOR THE BARRIER PLATES IS TO BE ASTM A36 STEEL. THE BOLTS SHALL MEET THE REQUIREMENTS OF ASTM A307. THE PLATES, BOLTS, NUTS AND CAP SCREWS ARE TO BE GALVANIZED IN ACCORDANCE WITH ARTICLE 4100.07 OF THE STANDARD SPECIFICATIONS.

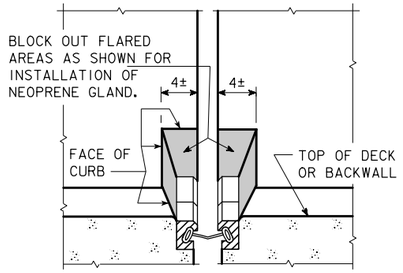

BLOCKOUT DETAIL

CONTRACTOR TO NOTE THAT THE CAP SCREW ANCHORAGE SYSTEM FOR THE $\frac{3}{8}$" BARRIER PLATES ARE ALWAYS TO BE PLACED ON THE ONCOMING TRAFFIC SIDE.

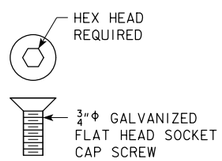

CAP SCREW DETAIL

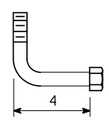

BENT BOLT DETAIL

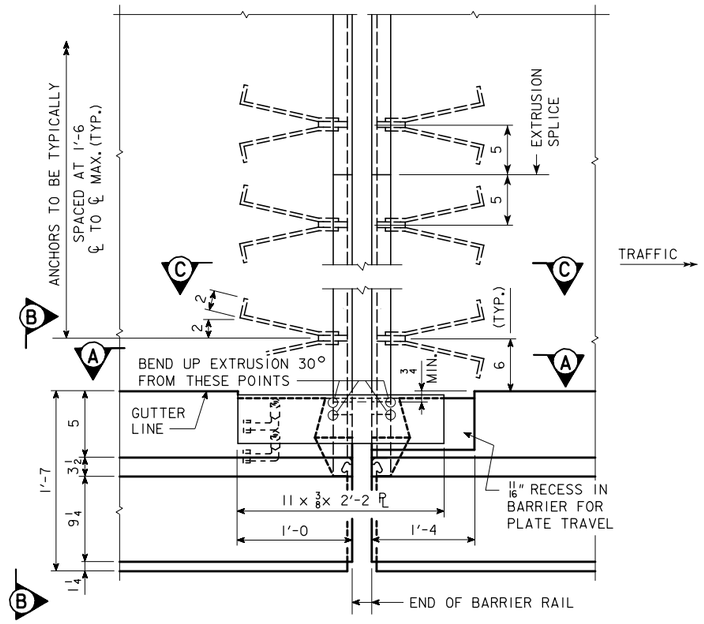

PART PLAN VIEW OF EXPANSION DEVICE AT SOUTH ABUTMENT, 0° SKEW

NOTE: JOINT SETTINGS FOR OTHER TEMPERATURES ARE PROPORTIONAL. TEMPERATURES SHOWN ARE CONCRETE DECK TEMPERATURES ON THE UNDERSIDE OR SHADED PORTION OF THE DECK.

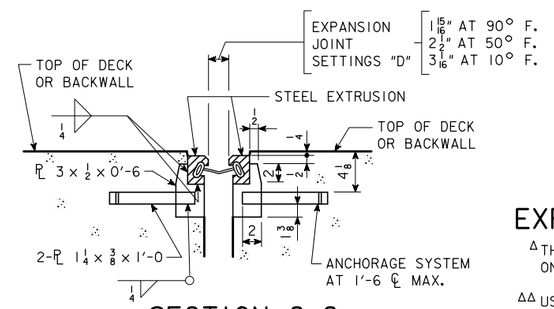

SECTION C-C

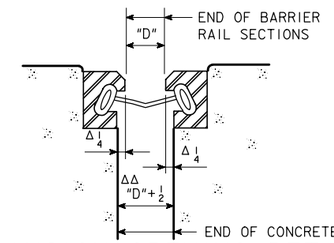

EXPANSION OPENING DETAIL

Δ THIS DIMENSION MAY VARY SLIGHTLY DEPENDING ON MANUFACTURER FURNISHING THE JOINT.

ΔΔ USED FOR ALL OUT TO OUT DIMENSIONS OF DECK. THE DIMENSION MAY VARY SLIGHTLY DEPENDING ON MANUFACTURER FURNISHING THE JOINT.

NOTE: IT IS INTENDED THAT THE $\frac{11}{16}$ INCH RECESSED AREA BE FORMED SO THAT WHEN THE $\frac{3}{8}$" BENT PLATE IS INSTALLED THE PLATE WILL BE ABLE TO MOVE FREELY IN THIS RECESSED AREA.

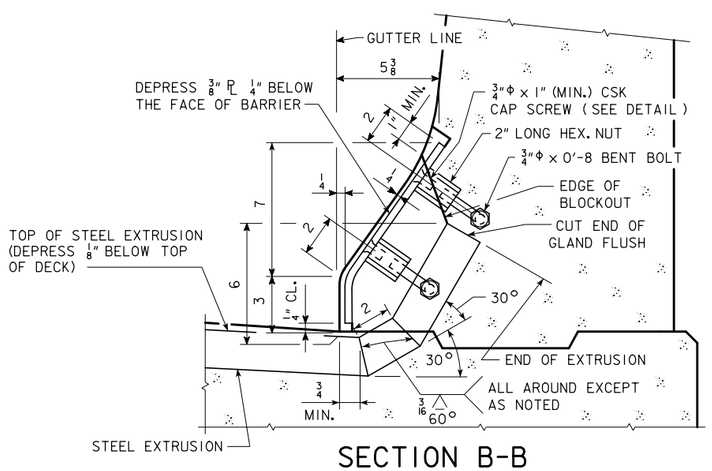

SECTION B-B

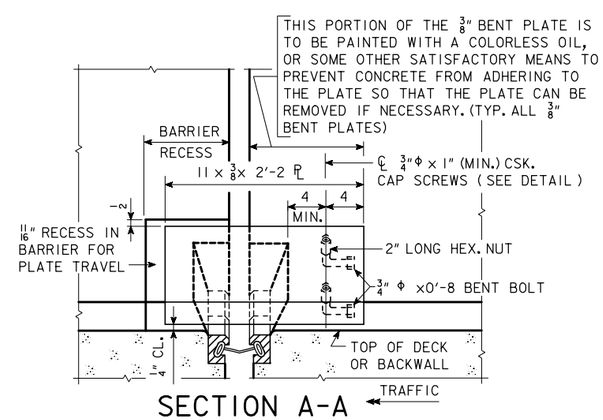

SECTION A-A

TABLE OF APPROVED EXPANSION DEVICES				
MANUFACTURER	TYPE OF STEEL EXTRUSION	NEOPRENE GLAND	MINIMUM OPENING FOR GLAND INSTALLATION	CORRESPONDING MAXIMUM DECK TEMPERATURE
WATSON-BOWMAN & ACME CORP.	A	SE-400	$1\frac{1}{2}$"	125° F.
D.S. BROWN CO.	SSA2	A2R-400	2"	87° F.
APPROVED EQUAL				

NOTE:
SEE DESIGN SHEET 23 FOR EXPANSION DEVICE NOTES CONTAINING THE STEEL EXTRUSION NOTES, NEOPRENE GLAND NOTES, AND WATERTIGHT INTEGRITY TESTING AND REPAIR NOTES.

DESIGN FOR 0° SKEW ON 3,300' RADIUS CURVE

566'-6 X VARIES CONTINUOUS WELDED GIRDER BRIDGE

171'-0, 226'-0, 169'-6 SPANS

STRIP SEAL JOINT DETAILS AT SOUTH ABUTMENT

STA. 2543+48.27 (℄ RAMP B) APRIL 2018

JOHNSON COUNTY

IOWA DEPARTMENT OF TRANSPORTATION - HIGHWAY DIVISION

DESIGN SHEET NO. 22 OF 31 FILE NO. 30864 DESIGN NO. 420

REVISION 08-13 - ADDED A CORRESPONDING MAXIMUM DECK TEMPERATURE COLUMN TO EXPANSION DEVICE TABLE. ADDED A SPLICE DETAIL TO THE PART PLAN VIEWS.
ENGLISHDECKRAILBRIDGES.DGN 1026 - THIS SHEET ISSUED 03-02.