BEARING DATA TABLE

LOCATION	TYPE	GIRDER LINE	TOP OF BEARING ELEVATION	LONGITUDINAL SLOPE OF SOLE PLATE (%)	TRANSVERSE SLOPE OF MASONRY PLATE (%)	BEARING HEIGHT (MIN.) (INCHES)	STRENGTH VERTICAL LOAD MAX. (KIPS)	STRENGTH VERTICAL LOAD MIN. (KIPS)	STRENGTH HORIZONTAL LOAD (KIPS)◪ TRANSV.	STRENGTH HORIZONTAL LOAD (KIPS)◪ LONGIT.	EXTREME EVENT HORIZONTAL LOAD (KIPS)◪ TRANSV.	EXTREME EVENT HORIZONTAL LOAD (KIPS)◪ LONGIT.	SERVICE VERTICAL LOAD MAX. (KIPS)	SERVICE VERTICAL LOAD MIN. (KIPS)	SERVICE HORIZONTAL LOAD (KIPS)◪ TRANSV.	SERVICE HORIZONTAL LOAD (KIPS)◪ LONGIT.	TOTAL LONGITUDINAL MOVEMENT (INCHES)	ANCHOR BOLTS DIM. "X" (INCHES)	ANCHOR BOLTS DIM. "Y" (INCHES)	ANCHOR BOLTS NUMBER AND SIZE (EACH BEARING)	ANCHOR BOLTS MINIMUM EMBEDMENT
PIER NO. 5A AHEAD BEARING	GE	"A"	774.22	-1.11	-3.28	9✱✱	358	55	24	-	19	-	233	74	17	-	4.6	16	5.5	4 - $1\frac{1}{2}$"Φ	1'-6
		"B"	774.08	-1.52	0.00																
		"C"	773.68	-1.47	0.00																
		"D"	773.27	-1.33	-3.28																
PIER NO. 6A	GE	"A"	771.43	-1.93	-4.20	9	905	269	65	-	69	-	617	313	43	-	2.6	16	6	4 - $1\frac{1}{2}$"Φ	1'-6
		"B"	771.11		0.00																
		"C"	770.79		0.00																
		"D"	770.47		-4.20																
PIER NO. 7A	FX	"A"	766.17	-2.73	-4.20	9	861	264	65	72	◕ 167		589	310	43	50	0.0	16	6	4 - 2"Φ	2'-0
		"B"	765.84		0.00																
		"C"	765.52		0.00																
		"D"	765.20		-4.20																
SOUTH ABUTMENT	GE	"A"	761.38	-2.87	0.00	9	310	47	20	-	15	-	202	68	10	-	2.0	16	6	4 - $1\frac{1}{2}$"Φ	1'-6
		"B"	761.05		0.00																
		"C"	760.73		0.00																
		"D"	760.41		0.00																

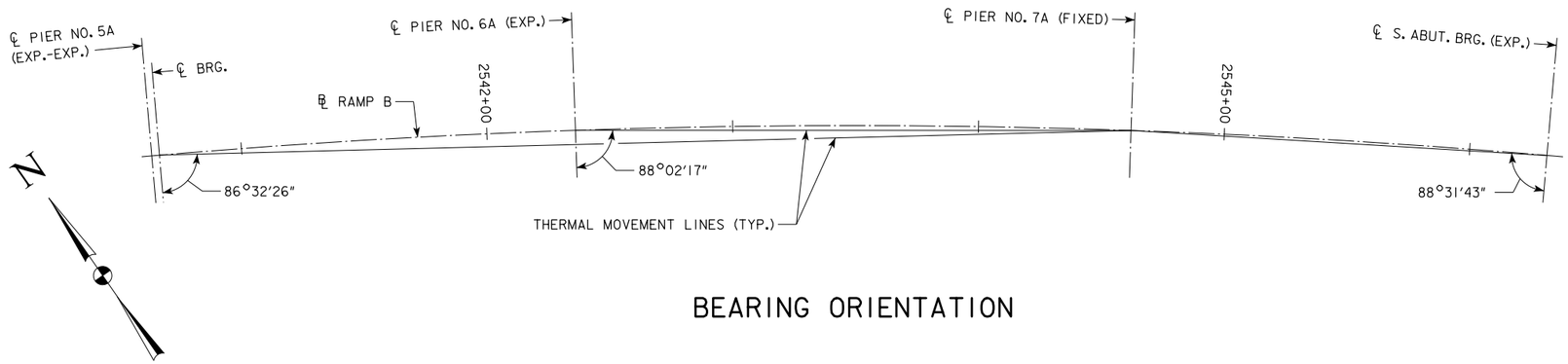

BEARING ORIENTATION

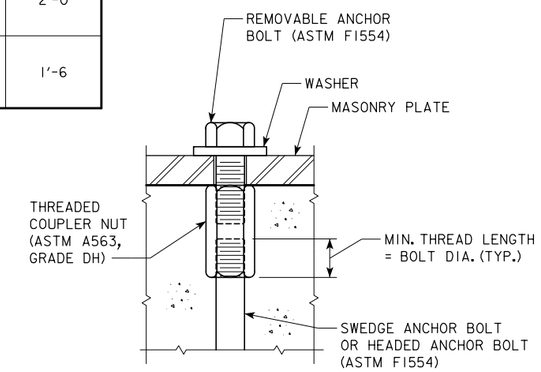

REMOVABLE ANCHOR BOLT DETAIL

NOTES:
FOR DISC BEARING NOTES AND DETAILS, SEE DESIGN SHEET 18.
◕ BEARINGS SHALL BE DESIGNED FOR THIS FORCE APPLIED IN ANY SINGLE DIRECTION.
◪ THE TRANSVERSE DIRECTION IS PERPENDICULAR TO ℄ GIRDER. THE LONGITUDINAL DIRECTION IS ALONG ℄ GIRDER.
✱✱ BEARING HEIGHTS AT PIER NO. 5A SHALL BE COORDINATED BETWEEN THE BACK BEARINGS (DESIGN NO. 320) AND THE AHEAD BEARINGS (DESIGN NO. 420). THE BEARING HEIGHTS SHOWN ON THE PLANS ARE MINIMUMS AND THE BEARING MANUFACTURER MAY INCREASE THE BEARING HEIGHTS SO LONG AS THE HEIGHT DIFFERENTIAL BETWEEN THE BACK AND AHEAD BEARINGS SHOWN IN THE PLANS IS MAINTAINED.
THE LOWER BEARING HORIZONTAL ANCHOR BOLTS SHALL BE FASTENED TO A THREADED COUPLER NUT AS SHOWN. THE COUPLER NUT SHALL MEET THE REQUIREMENTS OF ASTM A563, GRADE DH. IN ADDITION TO THESE REQUIREMENTS THE THE ULTIMATE STRENGTH OF THE COUPLER NUT SHALL BE MINIMUM 90% OF ULTIMATE TENSILE STRENGTH OF ANCHOR BOLTS AND DEVELOP IN TENSION AT LEAST 125% OF THE SPECIFIED YIELD STRENGTH. THE MINIMUM THREAD ENGAGEMENT SHALL BE THE DIAMETER OF THE BOLT OR THE LENGTH REQUIRED TO DEVELOP THE STRENGTH NOTED. THE THREAD ENGAGEMENT SHALL BE SHOWN ON THE SHOP DRAWINGS. THE CONTRACTOR SHALL ENSURE MINIMUM THREAD ENGAGEMENT OF THE EMBEDDED SWEDGE ANCHOR AND THE REMOVABLE ANCHOR BOLT THRU USE OF INTERNAL STOPS, SIGHT HOLES, OR OTHER MEANS. THE REMOVABLE ANCHOR BOLT SHALL BE INSTALLED WITH RIGHT HAND THREADS.

BEARING AND EXPANSION DEVICE SETTING (INCHES)

TEMPERATURE AT TIME OF SETTING ✳	PIER NO. 5A	AHEAD BRG. PIER NO. 5A	PIER NO. 6A	PIER NO. 7A	SOUTH ABUTMENT	SOUTH ABUTMENT
	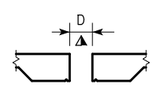 ◭ MEASURED PERPENDICULAR TO JOINT	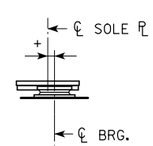	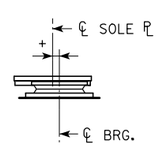	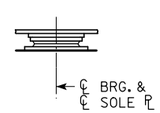	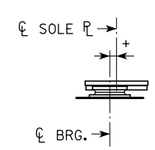	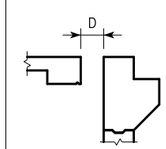
10°F	$1'-0\frac{1}{4}$	$-1\frac{1}{4}$	$-\frac{11}{16}$	0	$-\frac{1}{2}$	$3\frac{1}{2}$
50°F	9	0	0	0	0	3
90°F	$5\frac{3}{4}$	$1\frac{1}{4}$	$\frac{11}{16}$	0	$\frac{1}{2}$	$2\frac{1}{2}$

NOTES:
BEARING AND EXPANSION DEVICE SETTINGS SHALL BE MADE IN EARLY MORNING, PREFERABLY BEFORE SUN HEAT AFFECTS LENGTH. FOR EXPANSION DEVICE SETTINGS, SEE DESIGN SHEETS 22 AND 23.
SET SOLE PLATES IN DIRECTION SHOWN FOR TEMPERATURES ABOVE 50°F., AND IN THE OPPOSITE DIRECTION FOR TEMPERATURES BELOW 50°F.
SETTINGS FOR OTHER TEMPERATURES ARE PROPORTIONAL.
FIXED PIER NO. 7A SOLE PLATES SHALL BE WELDED TO THE GIRDER FLANGE PRIOR TO PIER NOS. 5A AND 6A AND THE SOUTH ABUTMENT SOLE PLATES.
✳ TEMPERATURE OF STRUCTURE (STEEL AND/OR DECK), NOT AIR TEMPERATURE.

DESIGN FOR 0° SKEW ON 3,300' RADIUS CURVE

566'-6 X VARIES CONTINUOUS WELDED GIRDER BRIDGE

171'-0, 226'-0, 169'-6 SPANS

DISC BEARING DETAILS

STA. 2543+48.27 (℄ RAMP B) APRIL 2018

JOHNSON COUNTY

IOWA DEPARTMENT OF TRANSPORTATION - HIGHWAY DIVISION

DESIGN SHEET NO. 19 OF 31 FILE NO. 30864 DESIGN NO. 420