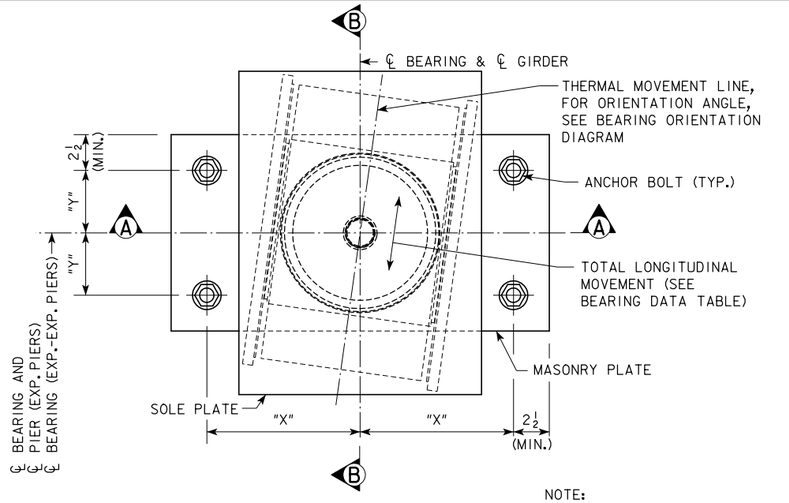

PLAN

NOTE:
FOR DIMENSIONS "X" AND "Y", SEE BEARING DATA TABLE ON DESIGN SHEET 19.

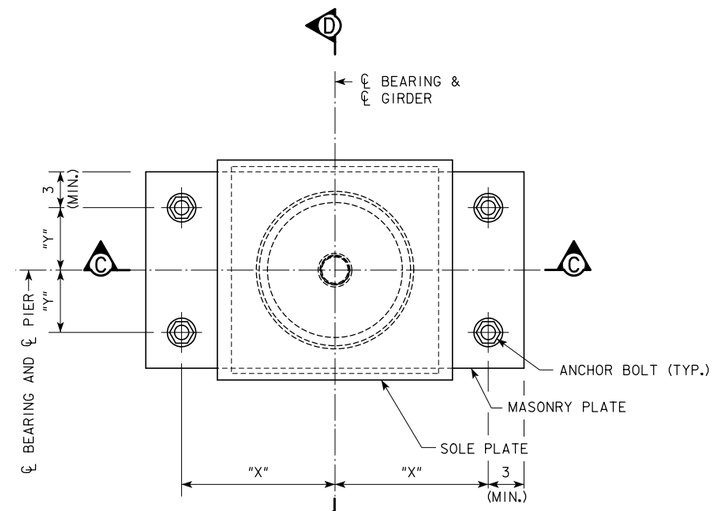

PLAN

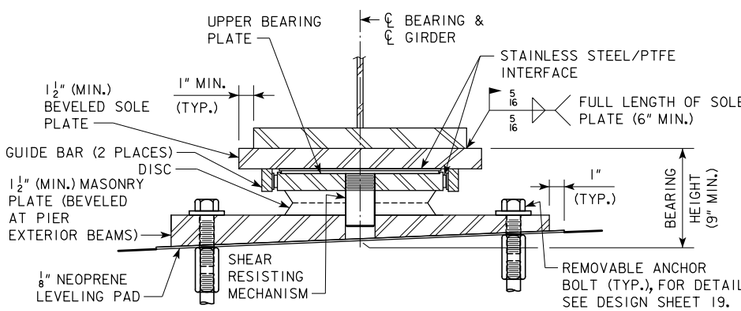

SECTION A-A
(LOOKING AHEAD STATION, SHOWING POSITIVE TRANSVERSE SLOPE)

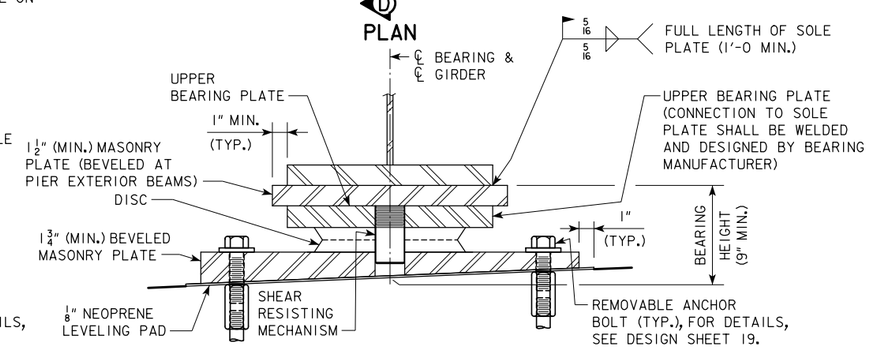

SECTION C-C
(LOOKING AHEAD STATION, SHOWING POSITIVE TRANSVERSE SLOPE)

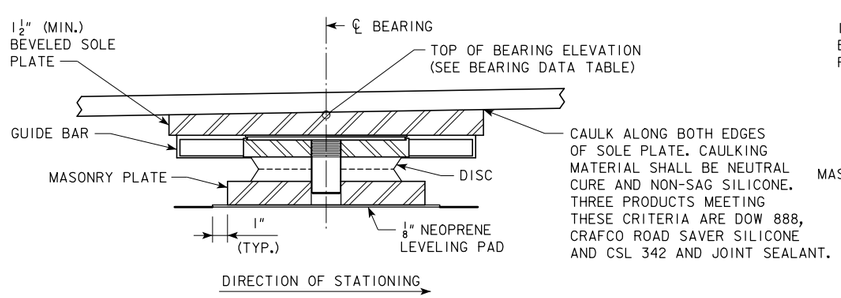

SECTION B-B
(SHOWING POSITIVE LONGITUDINAL SLOPE)

GUIDED LONGITUDINAL EXPANSION BEARING - TYPE GE

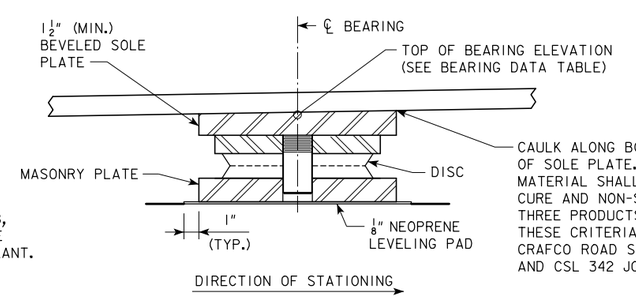

SECTION D-D
(SHOWING POSITIVE LONGITUDINAL SLOPE)

FIXED BEARING - TYPE FX

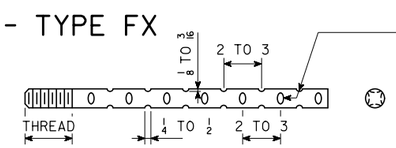

INDENTATION SHALL BE FORMED BY DISPLACEMENT OF METAL IN A STAGGERED PATTERN. NO CUTTING IS ALLOWED TO FORM INDENTATION. INDENTATIONS MAY BE EITHER OBLONG OR ROUND IN SHAPE.

ANCHOR BOLT SWEDGE DETAIL

DISC BEARING NOTES:

THE DISC BEARING ASSEMBLIES SHALL BE IN ACCORDANCE WITH THE REQUIREMENTS OF SECTION 2434 OF THE STANDARD SPECIFICATIONS.

THE SOLE PLATES SHALL BE TAPERED TO THE LONGITUDINAL SLOPE SHOWN IN THE BEARING DATA TABLE AND SHALL BE SIZED FOR THE MOVEMENTS SHOWN IN THE BEARING DATA TABLE. ADDITIONALLY, THE SOLE PLATES SHALL BE 2" WIDER THAN THE GIRDER BOTTOM FLANGE TO ALLOW THE PLACEMENT OF A HORIZONTAL WELD.

THE MASONRY PLATES AT GIRDERS A AND D SHALL BE TAPERED IN THE TRANSVERSE DIRECTION TO THE SLOPE SHOWN IN THE BEARING DATA TABLE.

THE BEARINGS SHALL BE DESIGNED FOR THE LOADS AND MOVEMENTS SHOWN IN THE BEARING DATA TABLE OCCURRING SIMULTANEOUSLY. ALL LOADS SHOWN ARE FACTORED LOADS. MINIMUM VERTICAL LOADS SHOWN ARE DUE TO MINIMUM DEAD LOADS (DC) AND L.L. WITH IMPACT CAUSING UPLIFT. MAXIMUM VERTICAL LOADS SHOWN ARE DUE TO DEAD LOADS (DC), FUTURE WEARING COURSE AND UTILITIES (DW) AND L.L. WITH IMPACT.

BEARINGS SHALL BE DESIGNED TO ACCOMMODATE A SERVICE ROTATION OF 0.02 RADIANS IN EACH DIRECTION.

ALL BEARINGS SHALL BE DESIGNED TO BE FULLY REMOVABLE.

FOR GUIDED EXPANSION BEARINGS, STAINLESS STEEL SURFACES SHALL EXTEND A MINIMUM OF 1 1/2" EACH WAY BEYOND THE SPECIFIED MOVEMENT RANGE. WHERE VALUES OF MOVEMENT ARE NOT SPECIFIED, STAINLESS STEEL SURFACES SHALL EXTEND A MINIMUM OF 1 1/2" BEYOND THE CONTACT SURFACES.

TOTAL MOVEMENTS SHOWN IN THE BEARING DATA TABLE REPRESENT THE COMBINED MOVEMENT RANGE FOR BRIDGE EXPANSION (50°F TO 125°F) AND BRIDGE CONTRACTION (50°F TO -25°F).

AT 50°F, THE SOLE PLATE SHALL BE CENTERED OVER THE LOWER BEARING ASSEMBLY. FOR OTHER INSTALLATION TEMPERATURES, THE SOLE PLATE POSITION SHALL BE ADJUSTED AS NOTED ON DESIGN SHEET 19.

ALL BEARINGS SHALL BE MARKED PRIOR TO SHIPPING. THE MARKS SHALL INCLUDE THE BEARING LOCATION IN THE BRIDGE AND A DIRECTION ARROW THAT POINTS UP-STATION. ALL MARKS SHALL BE PERMANENT AND BE VISIBLE AFTER THE BEARING IS INSTALLED. THE MARKS SHALL BE ON THE TOP PLATE OF THE BEARING.

ALL EXPANSION BEARINGS SHALL HAVE A MAXIMUM FRICTION COEFFICIENT OF 3%.

THE GAP BETWEEN THE GUIDE BARS AND BEARINGS ON THE "GE" TYPE BEARINGS SHALL BE 1/8".

NON-STAINLESS STEEL COMPONENTS OF BEARING ASSEMBLIES SHALL BE OF ASTM A709 GRADE 50W STEEL, EXCEPT MASONRY PLATES MAY BE GRADE 36 AND SHALL BE GALVANIZED PER ASTM A 123.

THE BEARING HEIGHT NOTED IN THE BEARING DATA TABLE REPRESENTS THE ASSUMED TOTAL HEIGHT OF THE BEARING ASSEMBLY PLUS THE 1/8" NEOPRENE LEVELING PAD. THIS HEIGHT WAS USED TO ESTABLISH THE PEDESTAL AND PIER CAP ELEVATIONS AS NOTED ON THE PIER AND ABUTMENT DETAIL SHEETS. THE MINIMUM PEDESTAL HEIGHT, DEPTH OF CAP, AND/OR COLUMN HEIGHT SHALL NOT BE CHANGED WITHOUT THE WRITTEN APPROVAL OF THE ENGINEER. THE ACTUAL BEARING HEIGHT DETERMINED BY THE BEARING MANUFACTURER SHALL BE USED TO SET THE FINAL TOP OF PEDESTAL AND PIER CAP ELEVATIONS TO ACHIEVE THE PROPER TOP OF BEARING ELEVATIONS GIVEN IN THE BEARING DATA TABLE. THE TOP OF PEDESTAL ELEVATIONS SHALL BE SHOWN ON THE SHOP DRAWINGS. 9" MINIMUM BEARING HEIGHT SHALL BE PROVIDED TO ACCOMMODATE FUTURE JACKING OPERATIONS FOR BEARING REPLACEMENT.

THE 1/8" NEOPRENE LEVELING PAD SHALL BE 1" LARGER IN EACH DIMENSION THAN THE BEARING SURFACE OF THE MASONRY PLATE. LEVELING PAD SHALL BE OF 50, 60, OR 70 DUROMETER NEOPRENE AND MEET THE REQUIREMENTS OF SECTION 4195.02 OF THE STANDARD SPECIFICATIONS.

IN ORDER TO COORDINATE TOP OF PEDESTAL AND PIER CAP ELEVATIONS AND ANCHOR BOLT LOCATIONS, ABUTMENTS AND PIERS SHALL NOT BE POURED PRIOR TO RECEIVING APPROVED BEARING SHOP DRAWINGS FOR THIS CONTRACT.

ANCHOR BOLTS SHALL MEET THE REQUIREMENTS OF MATERIALS I.M. 453.08. ANCHOR BOLTS SHALL BE AS PER ASTM F1554, GRADE 105. ANCHOR BOLT LAYOUT SHOWN IN THE DETAILS IS BASED ON PRELIMINARY BEARING DESIGN PROVIDED BY TWO BEARING VENDORS. THE ANCHOR BOLT LAYOUT WAS USED IN SETTING THE GEOMETRY OF THE ABUTMENT AND PIER REINFORCING WHICH SHOULD ALLOW THE ANCHOR BOLTS TO BE INSTALLED WITHOUT CONFLICT WITH THE REINFORCING. ANY CHANGES TO THE ANCHOR BOLT PATTERN MAY REQUIRE A PLAN CHANGE TO THE REINFORCING LAYOUT.

ANCHOR BOLTS SHALL BE EMBEDDED IN CONCRETE A MINIMUM DISTANCE AS SPECIFIED IN THE BEARING DATA TABLE, NOT INCLUDING THE DEPTH OF THE PEDESTAL CONCRETE. FABRICATOR SHALL DETERMINE REQUIRED ANCHOR BOLT LENGTH BASED ON BEARING DETAILS AND REQUIRED ANCHOR BOLT EMBEDMENT. SHOP DRAWINGS SHALL SHOW ANCHOR BOLT EMBEDMENT, PROJECTION, THREAD LENGTH, AND TOTAL BOLT LENGTH.

ANCHOR BOLTS ARE TO BE PRESET IN ACCORDANCE WITH 2405.03, H, 2 OF THE STANDARD SPECIFICATIONS.

HOLE DIAMETER FOR THE ANCHOR BOLTS IN THE MASONRY PLATE SHALL BE 1/4" LARGER THAN THE ANCHOR BOLT DIAMETER.

THE COST OF FURNISHING AND INSTALLING THE THREADED COUPLER NUTS SHALL BE INCLUDED IN THE PRICE BID FOR "DISC BEARING ASSEMBLIES".

FIELD WELDING SHALL MEET THE REQUIREMENTS OF MATERIALS I.M. 558.

NOTE:
FOR BEARING DATA TABLE AND BEARING ORIENTATION DIAGRAM, SEE DESIGN SHEET 19.

DESIGN FOR 0° SKEW ON 3,300' RADIUS CURVE

566'-6 X VARIES CONTINUOUS WELDED GIRDER BRIDGE

171'-0, 226'-0, 169'-6 SPANS

DISC BEARING DETAILS

STA. 2543+48.27 (℄ RAMP B) APRIL 2018

JOHNSON COUNTY

IOWA DEPARTMENT OF TRANSPORTATION - HIGHWAY DIVISION

DESIGN SHEET NO. 18 OF 31 FILE NO. 30864 DESIGN NO. 420