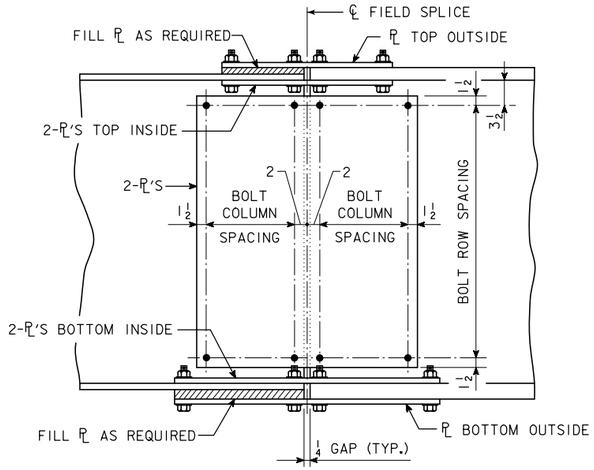

FIELD SPLICE ELEVATION

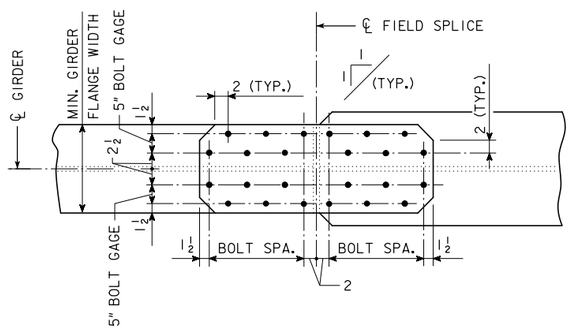

FLANGE SPLICE 18" MIN. GIRDER FLANGE WIDTH

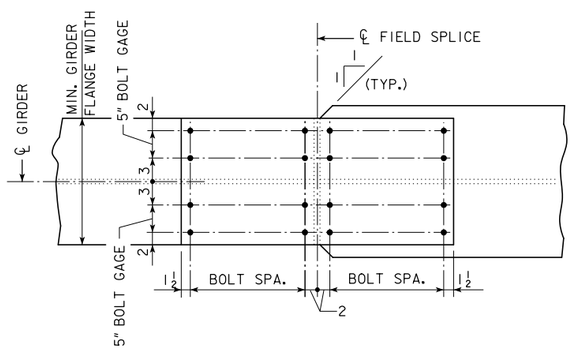

FLANGE SPLICE 20" MIN. GIRDER FLANGE WIDTH

HDR

DESIGN FOR 0° SKEW ON 3,300' RADIUS CURVE

566'-6 X VARIES CONTINUOUS WELDED GIRDER BRIDGE

171'-0, 226'-0, 169'-6 SPANS

FIELD SPLICE DETAILS

STA. 2543+48.27 (℄ RAMP B) APRIL 2018

JOHNSON COUNTY

IOWA DEPARTMENT OF TRANSPORTATION - HIGHWAY DIVISION

DESIGN SHEET NO. 17 OF 31 FILE NO. 30864 DESIGN NO. 420

DESIGN TEAM TLP/GMS/EES JOHNSON COUNTY PROJECT NUMBER IM-080-6(355)239--13-52 SHEET NUMBER 259