ABUTMENT NOTES:

THE CONTRACTOR SHALL NOTE THE ABUTMENT DETAILS HAVE BEEN MODIFIED TO OFFSET THE ABUTMENT FOOTING FROM THE BACKWALL TO AID IN TYING THE REINFORCING STEEL BETWEEN THE FOOTING TO BACKWALL.

MINIMUM CLEAR DISTANCE FROM FACE OF CONCRETE TO NEAR REINFORCING BAR IS TO BE 2" UNLESS OTHERWISE NOTED OR SHOWN IN THE PLANS.

THE MASKWALL IS TO BE POURED BEFORE THE SUPERSTRUCTURE DECK IS POURED.

CONSTRUCTION JOINT KEYWAYS ARE TO BE FORMED WITH BEVELED 2x8's. IN ADDITION TO CONSTRUCTION JOINTS SHOWN ON THIS SHEET, PROVIDE BEVELED 2x8 KEYWAY'S AT ALL CONSTRUCTION JOINTS.

THE PORTION OF THE BACKWALL CONTAINING THE ABUTMENT ANCHORAGE OF THE EXPANSION DEVICE IS TO BE PLACED AFTER THE BRIDGE DECK IS PLACED.

CONCRETE SEALER IS TO BE APPLIED TO THE ABUTMENT BRIDGE SEATS IN ACCORDANCE WITH ARTICLE 2403.03,P,3 OF THE STANDARD SPECIFICATIONS. IN ADDITION TO THE REQUIREMENTS OF ARTICLE 2403.03.P,3, SEALER SHALL BE APPLIED TO THE WASH BETWEEN BRIDGE SEATS.

PAVING NOTCH DOWELS SHALL BE STAINLESS STEEL DEFORMED BAR GRADE 60 MEETING THE REQUIREMENTS OF MATERIALS I.M. 452.

IF NECESSARY TO PREVENT DAMAGE TO THE END OF THE BRIDGE DECK OR BACKWALL FROM CONSTRUCTION EQUIPMENT, AN APPROPRIATE METHOD OF PROTECTION APPROVED BY THE ENGINEER SHALL BE PROVIDED BY THE BRIDGE CONTRACTOR AT NO EXTRA COST TO THE STATE.

GIRDERS ARE TO BE SET BEFORE BACKWALL IS PLACED.

FOR EXCAVATION LIMITS, SEE BACKFILL DETAILS ON DESIGN SHEET 30.

WELDING OF ANCHOR BOLTS SHALL NOT BE ALLOWED. THE CONTRACTOR SHALL OBTAIN A TEMPLATE FROM THE MANUFACTURER/FABRICATOR FOR PROPER PLACEMENT OF THE ANCHOR BOLTS.

ABUTMENT PEDESTAL ELEVATIONS AND PEDESTAL HEIGHTS ARE DEPENDENT ON FINAL BEARING HEIGHT, WHICH SHALL BE DETERMINED BY BEARING MANUFACTURER. CONTRACTOR SHALL VERIFY BEARING HEIGHT WITH MANUFACTURER, AND ADJUST ELEVATIONS IF NECESSARY, PRIOR TO PLACING CONCRETE.

ABUTMENT PILES SHALL BE EMBEDDED 2'-0 INTO ABUTMENT FOOTING AND 1'-0 INTO COUNTERFORT FOOTING MEASURED FROM BOTTOM OF FOOTING.

ABUTMENT PILE NOTES:

THE CONTRACT LENGTH OF 100 FEET FOR THE SOUTH ABUTMENT PILES IS BASED ON A COHESIVE SOIL CLASSIFICATION, A TOTAL FACTORED AXIAL LOAD PER PILE (PU) OF 140 KIPS AND A GEOTECHNICAL RESISTANCE FACTOR (PHI) OF 0.65. ABUTMENT PILES ALSO WERE DESIGNED FOR A FACTORED TENSION FORCE OF 47 KIPS.

THE NOMINAL AXIAL BEARING RESISTANCE FOR CONSTRUCTION CONTROL WAS DETERMINED FROM A COHESIVE SOIL CLASSIFICATION AND A GEOTECHNICAL RESISTANCE FACTOR (PHI) OF 0.78. PILES ARE ASSUMED TO BE DRIVEN FROM A START ELEVATION AT THE BOTTOM OF FOOTING.

THE REQUIRED NOMINAL AXIAL BEARING RESISTANCE FOR THE SOUTH ABUTMENT PILES IS 90 TONS AT END OF DRIVE. IF RETAPS ARE NECESSARY TO ACHIEVE BEARING, THE REQUIRED NOMINAL AXIAL BEARING RESISTANCE IS 108 TONS AT ONE-DAY OR LATER RETAPS. THE PILE CONTRACT LENGTH SHALL BE DRIVEN AS PER PLAN UNLESS PILES REACH REFUSAL. IN NO CASE SHALL A PILE BE EMBEDDED LESS THAN 55 FEET. CONSTRUCTION CONTROL REQUIRES A WEAP ANALYSIS WITH BEARING GRAPH.

BATTER PILES 1:4 IN THE DIRECTION SHOWN IN THE DIGITAL FILES.

21-HP12x53 STEEL BEARING PILING REQUIRED.

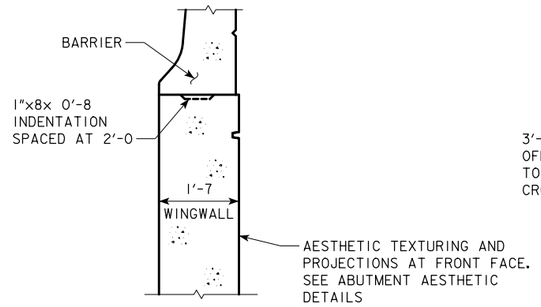

PART SECTION AT WINGWALL

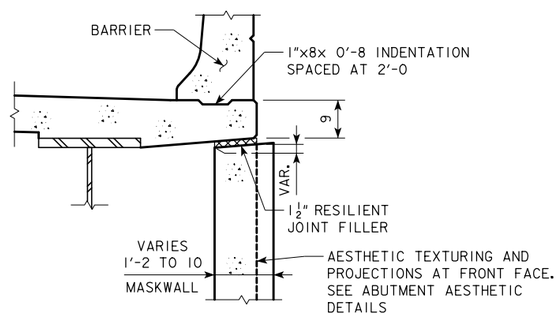

PART SECTION AT MASKWALL

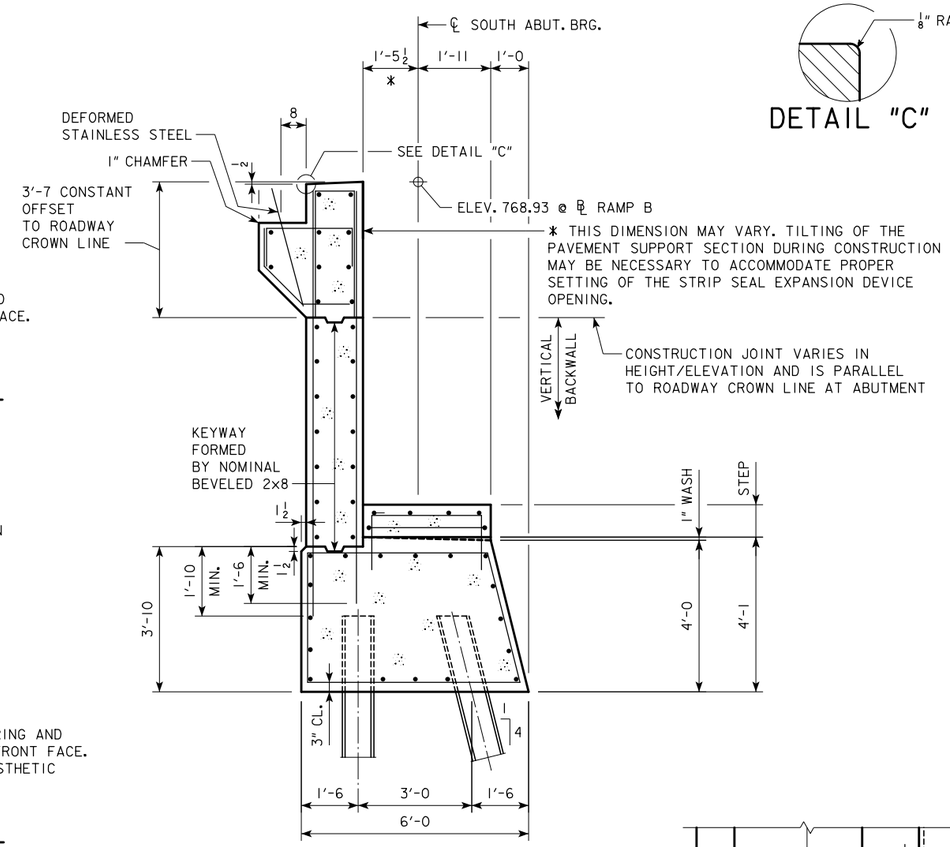

SECTION THROUGH ABUTMENT
(EXPANSION DEVICE NOT SHOWN)

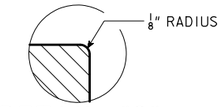

DETAIL "C"

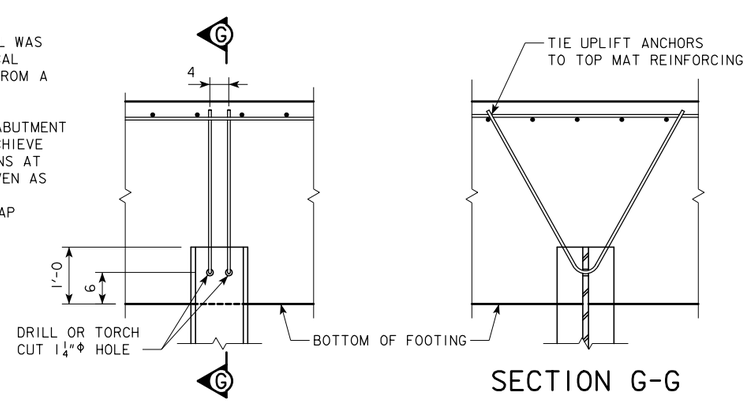

SECTION G-G

COUNTERFORT PILE UPLIFT ANCHOR DETAIL
(AT INSIDE PILES OF WINGWALL FOOTING - 4 LOCATIONS)

NOTE:
THE CONTRACTOR SHALL HOLD BARS IN POSITION DURING CONSTRUCTION SUCH THAT THE BARS BEAR AGAINST THE TOP OF THE HOLES PLACED IN THE PILE.

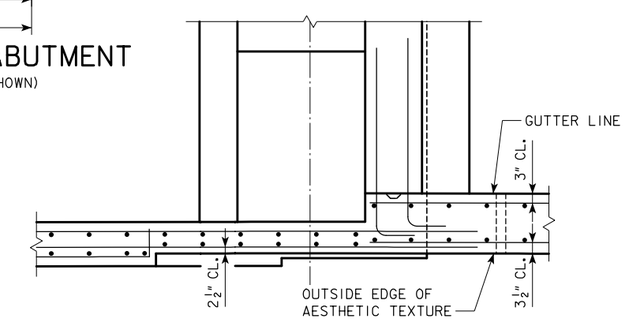

ABUTMENT WINGWALL CLEARANCES

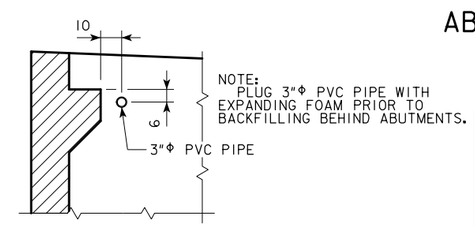

PVC PIPE LOCATION DETAIL
(2 TOTAL)

DESIGN FOR 0° SKEW ON 3,300' RADIUS CURVE

566'-6 X VARIES CONTINUOUS WELDED GIRDER BRIDGE

171'-0, 226'-0, 169'-6 SPANS

ABUTMENT NOTES

STA. 2543+48.27 (℄ RAMP B) APRIL 2018

JOHNSON COUNTY

IOWA DEPARTMENT OF TRANSPORTATION - HIGHWAY DIVISION

DESIGN SHEET NO. 6 OF 31 FILE NO. 30864 DESIGN NO. 420