SUPERSTRUCTURE NOTES:

THE BRIDGE DECK AS SHOWN INCLUDES $\frac{1}{2}$" INTEGRAL WEARING SURFACE. FORMS FOR THE BRIDGE DECK AND BARRIER RAIL ARE TO BE SUPPORTED BY THE GIRDERS.

CLEAR DISTANCE FROM FACE OF CONCRETE TO NEAR REINFORCING BAR SHALL BE 2 INCHES UNLESS OTHERWISE NOTED OR SHOWN IN THE PLANS.

TOP TRANSVERSE REINFORCING STEEL IS TO BE PARALLEL TO AND $2\frac{1}{2}$" CLEAR BELOW TOP OF DECK. BOTTOM TRANSVERSE REINFORCING STEEL IS TO BE PARALLEL TO AND 1" CLEAR ABOVE BOTTOM OF DECK. TOP AND BOTTOM REINFORCING STEEL IS TO BE SUPPORTED BY INDIVIDUAL BAR CHAIRS SPACED AT NOT MORE THAN 3'-0 CENTERS LONGITUDINALLY AND TRANSVERSELY, OR BY CONTINUOUS ROWS OF BAR HIGH CHAIRS OR DECK BOLSTERS SPACED 4'-0 APART. I.M. 451.01 REQUIREMENTS SHALL APPLY FOR BAR CHAIRS, HIGH BAR CHAIRS, AND DECK BOLSTERS.

ALL FIELD CONNECTIONS ARE TO BE BOLTED USING "HIGH STRENGTH BOLTS". UNLESS OTHERWISE NOTED, ALL OPEN HOLES ARE TO BE $\frac{15}{16}$"Φ AND ALL BOLTS ARE TO BE $\frac{7}{8}$"Φ.

BOTTOM FLANGES ARE TO BE PERPENDICULAR TO WEBS AT THE REACTION POINTS.

FILL PL THICKNESSES SHOWN ON PLANS ARE BASED ON NOMINAL GIRDER DIMENSIONS. THESE THICKNESSES ARE TO BE VERIFIED OR ADJUSTED DURING FABRICATION TO SECURE A CLOSE FIT. EACH FILL PLATE SHALL FIT TO THE NEAREST $\frac{1}{16}$" IN THICKNESS AND SINGLE PLATES ARE REQUIRED AT EACH FILL LOCATION. GIRDERS ARE TO BE TRULY SQUARE AT SPLICE POINTS WITH FLANGES PERPENDICULAR TO WEBS.

THE DESIGN DRAWINGS INDICATE AWS PREQUALIFIED WELDED JOINTS. ALTERNATE JOINT DETAILS MAY BE SUBMITTED FOR APPROVAL.

MAGNETIC PARTICLE INSPECTION OF WELDS, IN ACCORDANCE WITH THE STANDARD SPECIFICATIONS, WILL BE REQUIRED.

SHOP WELDED FLANGE SPLICES SHALL BE A MINIMUM OF 6 INCHES FROM A STIFFENER, 6 INCHES FROM A WEB SPLICE, AND 4 INCHES FROM A SHEAR CONNECTOR. WEB SPLICES SHALL BE A MINIMUM OF 6 INCHES FROM A STIFFENER. SPLICES SHALL NOT INTERFERE WITH ANY OTHER BRIDGE COMPONENTS. ALL SHOP WELDED BUTT SPLICES SHALL BE SHOWN ON THE SHOP DRAWINGS AND SUBJECT TO APPROVAL BY THE ENGINEER.

LONGITUDINAL CONSTRUCTION JOINTS ARE NOT ALLOWED.

LEFT BARRIER RAIL SHALL BE ORIENTED VERTICAL FOR 20 FEET BEYOND CENTERLINE PIER NO. 5A TO MATCH BARRIER ORIENTATION OF END BLOCK OF DESIGN 320 OF THIS PROJECT. FOR THE DISTANCE OF 20 FEET TO 40 FEET FROM THE CENTERLINE PIER NO. 5A, TRANSITION THE BARRIER FROM VERTICAL TO PERPENDICULAR TO THE DECK. THE REMAINDER OF THE LEFT BARRIER RAIL SHALL BE ORIENTED PERPENDICULAR TO DECK. RIGHT BARRIER RAIL SHALL BE ORIENTED PLUMB (DECK BELOW RAIL IS LEVEL).

SPLASH BASINS SHALL BE CENTERED DIRECTLY UNDER BRIDGE DRAINS AT:

TABLE OF DECK DRAIN LOCATIONS			
LOCATION	STATION	OFFSET FROM ℄ RAMP B	SPLASH BASIN REQUIRED
PIER NO. 6A (BACK)	2542+16.02	RIGHT	YES
PIER NO. 7A (BACK)	2544+42.02	RIGHT	YES
SOUTH ABUT. (BACK)	2546+16.52	RIGHT	NO
SOUTH ABUT. (BACK)	2546+21.52	RIGHT	NO

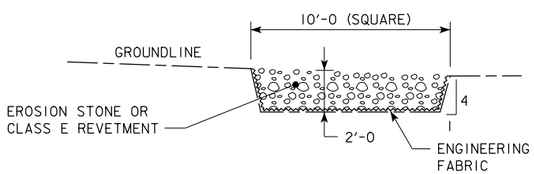

SPLASH BASIN UNDER BRIDGE DRAIN TYPICAL SECTION

WEATHERING STEEL NOTES:

ALL STRUCTURAL STEEL, EXCEPT AS NOTED, SHALL CONFORM TO ASTM A709 GRADE 50W. THE MINIMUM YIELD POINT FOR GRADE 50W STRUCTURAL STEEL IS 50 KSI FOR PLATES 4 INCHES AND UNDER IN THICKNESS, AND ALL STRUCTURAL SHAPES. THE GRADE 50W STEEL IS A WEATHERING STEEL AND IS TO REMAIN UNPAINTED, EXCEPT AS NOTED.

DECK DRAINS INCLUDING PLATES WELDED TO THE DRAIN FOR DRAIN SUPPORT ARE TO BE GRADE 36 STEEL.

ALL PIECES COMPRISING THE ABUTMENT AND PIER BEARINGS SHALL COMPLY WITH THE REQUIREMENTS AS STATED IN THE NOTES ON DESIGN SHEET 18.

SHEAR STUDS ARE TO BE OF AN APPROVED TYPE LISTED IN MATERIALS I.M. 453.10, APPENDIX A.

THE FINISH ON DECK DRAINS, BEARINGS AND WEATHERING STEEL SHALL BE IN ACCORDANCE WITH THE PLAN NOTES AND SECTION 2408, OF THE STANDARD SPECIFICATIONS. EXTERIOR SURFACES OF ALL GALVANIZED COMPONENTS WHICH ARE DESIGNATED IN THE CONTRACT DOCUMENTS TO BE PAINTED SHALL BE PREPARED ACCORDING TO ARTICLE 2509.03, OF THE STANDARD SPECIFICATIONS.

BOLTS FOR USE WITH WEATHERING STEEL SHALL BE A325 TYPE III WITH A563 GRADE DH3 NUTS AND F436 TYPE III WASHERS.

BOLTS USED TO SPLICE GIRDER SECTIONS ARE TO BE INSTALLED SUCH THAT NUTS ARE ON THE INSIDE FACE OF THE GIRDER WEBS FOR THE EXTERIOR GIRDERS, AND ON THE TOP OF BOTH TOP AND BOTTOM FLANGES OF ALL THE GIRDERS.

THE STEEL SHALL BE KEPT FREE OF OIL, GREASE, DIRT, CRAYON OR CHALK MARKS, CONCRETE SPATTER AND ANY OTHER FOREIGN MATTER THAT MAY AFFECT THE NATURAL OXIDATION OF THE STEEL. ANY FOREIGN MATTER REMAINING ON THE STEEL AFTER COMPLETION OF BRIDGE CONSTRUCTION SHALL BE REMOVED BY THE BRIDGE CONTRACTOR AS DIRECTED BY THE ENGINEER. THE RESULTANT SURFACE SHALL BE FREE OF ALL VISIBLE RESIDUES. ALL COSTS ASSOCIATED WITH CLEANING STEEL SURFACES SHALL BE BORNE BY THE BRIDGE CONTRACTOR.

SEAL MATERIAL FOR CAULKING SHALL BE NEUTRAL CURE AND NON-SAG SILICONE. THREE PRODUCTS MEETING THESE CRITERIA ARE DOW 888, CRAFCO ROAD SAVER SILICONE AND CSL342 JOINT SEALANT.

PAINTED SURFACES SHALL BE PROTECTED FROM DAMAGE DURING SHIPMENT AND DURING ERECTION. PADDING OR OTHER MATERIAL APPROPRIATE FOR PROTECTING PAINTED SURFACES SHALL BE PLACED BETWEEN THE DECK FORMWORK BRACING AND THE EXTERIOR GIRDER FACE DURING CONSTRUCTION OF THE DECK. AFTER ERECTION OF THE BRIDGE, PAINTING OF EXTERIOR FASTENERS AND TOUCHUP OF PAINTED SURFACES SHALL BE IN ACCORDANCE WITH SECTION 2408.02, Q, OF THE STANDARD SPECIFICATIONS.

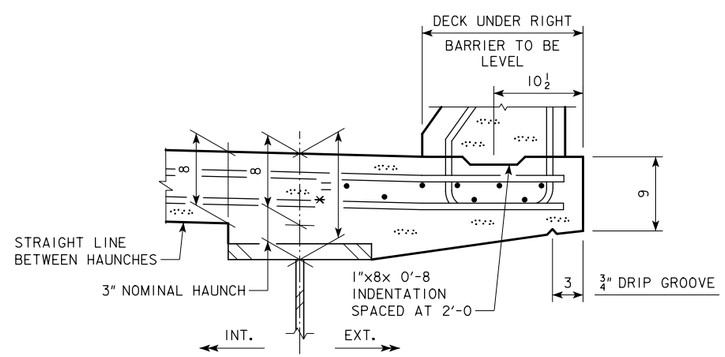

TYP. DECK & HAUNCH DETAIL

* DIMENSION SHOWN IS MEASURED FROM TOP OF DECK TO TOP OF WEB. THEORETICALLY THIS IS A CONSTANT DIMENSION ALONG THE GIRDER AND IS USED BY THE DESIGNER TO SET BRIDGE SEAT ELEVATIONS AND ESTIMATE CONCRETE QUANTITIES. REFER TO THE FIELD HAUNCH DATA DETAIL SHEET FOR ADDITIONAL INFORMATION TO AID THE CONTRACTOR IN SETTING THE FIELD HAUNCHES REQUIRED FOR CONSTRUCTION.

THE MAXIMUM EMBEDMENT OF THE EDGE OF THE TOP FLANGE IN THE DECK SHALL BE $\frac{1}{2}$ INCH. SHEAR STUDS ARE TO HAVE A MINIMUM PENETRATION OF 2 INCHES INTO THE DECK AND BE AT LEAST $2\frac{1}{2}$ INCHES CLEAR OF THE TOP OF THE DECK. THESE REQUIREMENTS WERE USED IN SETTING THE MAXIMUM AND MINIMUM ALLOWABLE FIELD HAUNCH VALUES SHOWN IN THE "MISCELLANEOUS DATA TABLE" SHOWN IN THE DIGITAL FILES.

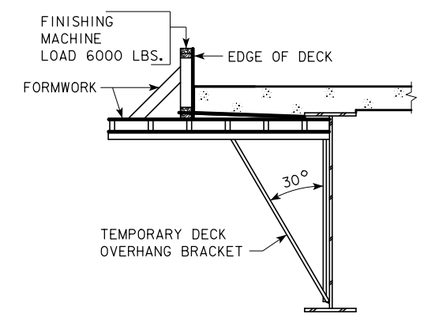

TEMPORARY DECK OVERHANG BRACKET DETAIL

A MAXIMUM FINISHING MACHINE LOAD AND THE ANGLE OF THE DIAGONAL MEMBER OF THE OVERHANG BRACKET SHOWN WERE ASSUMED BY THE DESIGNER. THESE ASSUMPTIONS, IN ADDITION TO OTHER CONSTRUCTION LOADINGS, WERE USED TO CHECK THE STRENGTH OF THE EXTERIOR GIRDER DURING CRITICAL STAGES OF CONSTRUCTION. IF THE FINISHING MACHINE LOAD OR ANGLE OF THE DIAGONAL MEMBER OF THE OVERHANG BRACKET DEVIATE SIGNIFICANTLY FROM VALUES SHOWN, THE CONTRACTOR SHALL SUBMIT TO THE ENGINEER THIS INFORMATION ON PROPOSED CONSTRUCTION EQUIPMENT TO BE USED.

IF THE VERTICAL HEIGHT OF THE OVERHANG BRACKET IS ADJUSTABLE, THE BASE OF THE BRACKET IS TO BE LOCATED AS CLOSE AS POSSIBLE TO THE BOTTOM FLANGE OF THE GIRDER.

DESIGN FOR 0° SKEW ON 3,300' RADIUS CURVE

566'-6 X VARIES CONTINUOUS WELDED GIRDER BRIDGE

171'-0, 226'-0, 169'-6 SPANS

SUPERSTRUCTURE NOTES

STA. 2543+48.27 (℄ RAMP B) APRIL 2018

JOHNSON COUNTY

IOWA DEPARTMENT OF TRANSPORTATION - HIGHWAY DIVISION

DESIGN SHEET NO. 7 OF 31 FILE NO. 30864 DESIGN NO. 420