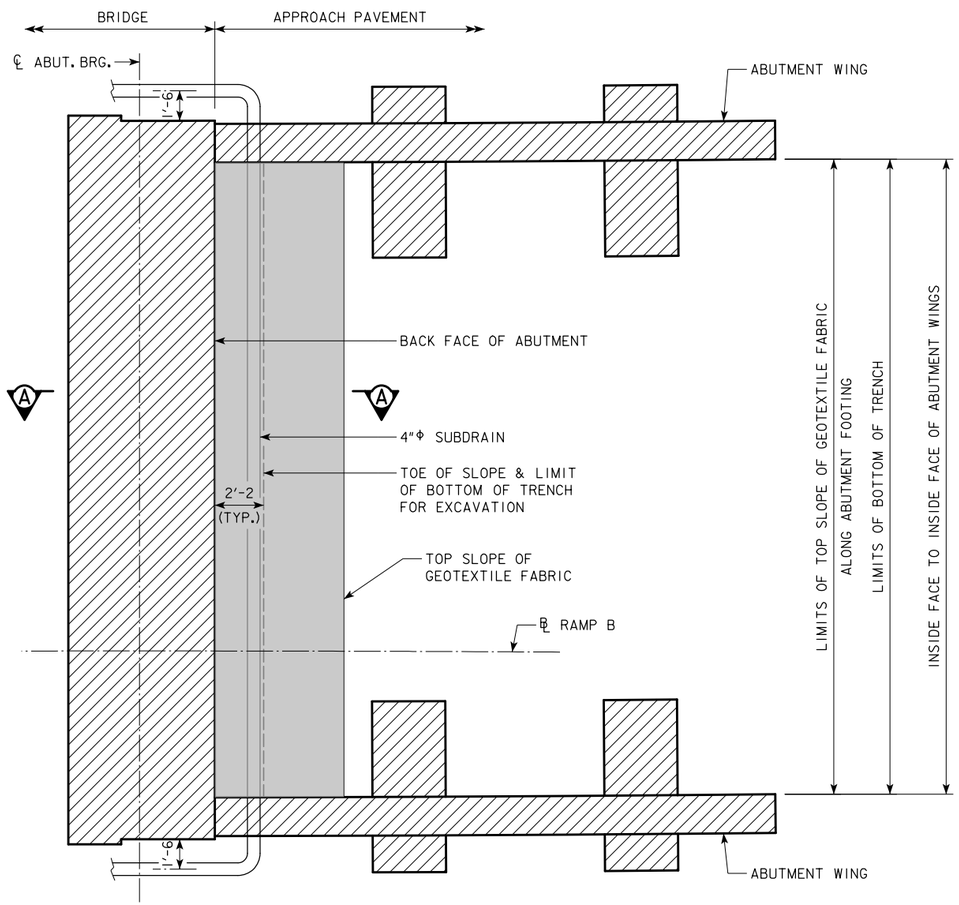

NOTE:
SHADED AREA SHOWS LIMITS OF GEOTEXTILE FABRIC.

SOUTH ABUTMENT PLAN

ABUTMENT BACKFILL PROCESS:

THE BASE OF THE EXCAVATION SUBGRADE BEHIND THE ABUTMENT IS TO BE GRADED WITH A 4% SLOPE AWAY FROM THE ABUTMENT FOOTING AND A 2% CROSS SLOPE IN THE DIRECTION OF THE SUBDRAIN OUTLET. THIS EXCAVATION SHAPING IS TO BE DONE PRIOR TO BEGINNING INSTALLATION OF THE GEOTEXTILE AND BACKFILL MATERIAL.

AFTER THE SUBGRADE HAS BEEN SHAPED, THE GEOTEXTILE FABRIC SHALL BE INSTALLED IN ACCORDANCE WITH THE DETAILS SHOWN. THE FABRIC IS INTENDED TO BE INSTALLED IN THE BASE OF THE EXCAVATION AND EXTENDED VERTICALLY UP THE ABUTMENT BACKWALL, ABUTMENT WING WALLS, AND EXCAVATION FACE TO A HEIGHT THAT WILL BE APPROXIMATELY 1 TO 2 FOOT HIGHER THAN THE HEIGHT OF THE POROUS BACKFILL PLACEMENT AS SHOWN IN THE "BACKFILL DETAILS" ON THIS SHEET. THE STRIPS OF THE FABRIC PLACED SHALL OVERLAP APPROXIMATELY 1 FOOT AND SHALL BE PINNED IN PLACE. THE FABRIC SHALL BE ATTACHED TO THE ABUTMENT BY USING LATH FOLDED IN THE FABRIC AND SECURED TO THE CONCRETE WITH SHALLOW CONCRETE NAILS. THE FABRIC PLACED AGAINST THE EXCAVATION FACE SHALL BE PINNED.

WHEN THE FABRIC IS IN PLACE, THE SUBDRAIN SHALL BE INSTALLED DIRECTLY ON THE FABRIC AT THE TOE OF THE REAR EXCAVATION SLOPE. A SLOT WILL NEED TO BE CUT IN THE FABRIC AT THE POINT WHERE THE SUBDRAIN EXITS THE FABRIC NEAR THE END OF THE ABUTMENT WING WALL.

POROUS BACKFILL IS THEN PLACED AND LEVELED, NO COMPACTION IS REQUIRED.

THE REMAINING WORK INVOLVES BACKFILLING WITH FLOODABLE BACKFILL, SURFACE FLOODING, AND VIBRATORY COMPACTION. THE FLOODABLE BACKFILL MATERIAL SHALL BE IN ACCORDANCE WITH THE STANDARD SPECIFICATIONS. THE FLOODABLE BACKFILL SHALL BE PLACED IN INDIVIDUAL LIFTS, SURFACE FLOODED, AND COMPACTED WITH VIBRATORY COMPACTION TO ENSURE FULL CONSOLIDATION. LIMIT THE LOOSE LIFTS TO NO MORE THAN 2 FEET OF THICKNESS.

START SURFACE FLOODING FOR EACH FLOODABLE BACKFILL LIFT AT THE HIGH POINT OF THE SUBDRAIN AND PROGRESS TO THE LOW POINT WHERE THE SUBDRAIN EXITS THE FABRIC. TO ENSURE UNIFORM SURFACE FLOODING, WATER RUNNING FULL IN A 2-INCH DIAMETER HOSE SHOULD BE SPRAYED IN SUCCESSIVE 6-FOOT TO 8-FOOT INCREMENTS FOR 5 MINUTES WITHIN EACH INCREMENT.

FLOODABLE BACKFILL LIFT PLACEMENT, FLOODING, AND COMPACTION SHALL PROGRESS UNTIL THE REQUIRED FULL THICKNESS OF THE ABUTMENT BACKFILL HAS BEEN COMPLETED.

WATER REQUIRED FOR FLOODING, SUBDRAINS, POROUS BACKFILL, FLOODABLE BACKFILL, AND GEOTEXTILE FABRIC FURNISHED AT THE BRIDGE ABUTMENTS WILL NOT BE MEASURED SEPARATELY FOR PAYMENT.

THE COST OF WATER REQUIRED FOR FLOODING, SUBDRAINS, POROUS BACKFILL, FLOODABLE BACKFILL, AND GEOTEXTILE FABRIC FURNISHED AT THE BRIDGE ABUTMENTS SHALL BE INCLUDED IN THE CONTRACT UNIT PRICE BID FOR HIGH PERFORMANCE STRUCTURAL CONCRETE.

NOTES:

SUBDRAIN SHALL SLOPE DOWNWARD 2% FROM ℄ APPROACH ROADWAY.

THE GEOTEXTILE FABRIC SHALL BE IN ACCORDANCE WITH ARTICLE 4196.01, B, 6 OF THE STANDARD SPECIFICATIONS. IF THE ENGINEERING FABRIC IS LAPPED THE LAPS SHALL BE A MINIMUM OF ONE FOOT IN LENGTH, SHINGLE FASHION WITH UP SLOPE LAP PIECE ON TOP AND STAPLED FOR CONTINUITY.

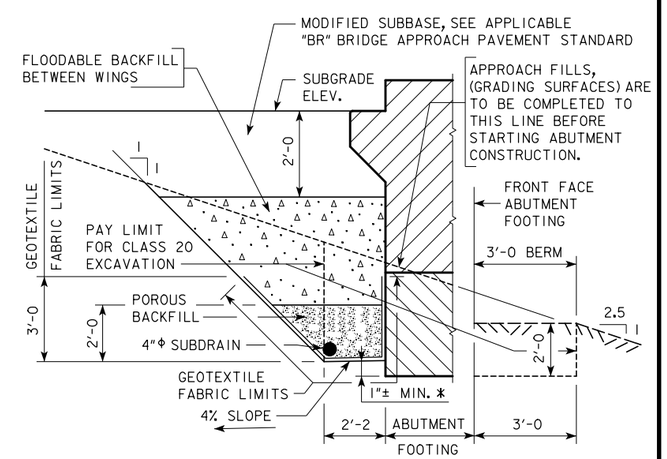

SECTION A-A

BACKFILL DETAILS

NOTE: GEOTEXTILE FABRIC WILL BE ATTACHED TO FACE OF ABUTMENT FOOTING AND WINGS.

* DIMENSION VARIES DUE TO 2% SUBDRAIN SLOPE.

NOTE:
SEE SUBDRAIN DETAILS SHEET FOR DETAILS NOT SHOWN ON THIS SHEET WHICH ARE PERTINENT TO THIS STRUCTURE.

DESIGN FOR 0° SKEW ON 3,300' RADIUS CURVE

566'-6 X VARIES CONTINUOUS WELDED GIRDER BRIDGE

171'-0, 226'-0, 169'-6 SPANS

ABUTMENT BACKFILL DETAILS

STA. 2543+48.27 (℄ RAMP B) APRIL 2018

JOHNSON COUNTY

IOWA DEPARTMENT OF TRANSPORTATION - HIGHWAY DIVISION

DESIGN SHEET NO. 30 OF 31 FILE NO. 30864 DESIGN NO. 420

DESIGN TEAM GMS/TLP/EES	ABUTMENT BACKFILL DETAILS (WING EXTENSION ABUTMENTS)	STANDARD SHEET 1007E (MODIFIED)	JOHNSON COUNTY	PROJECT NUMBER IM-080-6(355)239--13-52	SHEET NUMBER 272

REVISED 09-14 - THE TECHNICAL DATA INFORMATION TABLE WAS REMOVED AND IS LOCATED IN THE STANDARD SPECIFICATIONS. CHANGED SURFACE FLOODING TIME TO 5 MINUTE INCREMENTS.
REVISED 09-2016 - CHANGED THE BRIDGE APPROACH PAVEMENT STANDARD TO "BR" (WAS "RK").
ENGLISHFORESLOPEPROTECTIONBRIDGES.DGN - 1007E - THIS SHEET ISSUED 08-07.