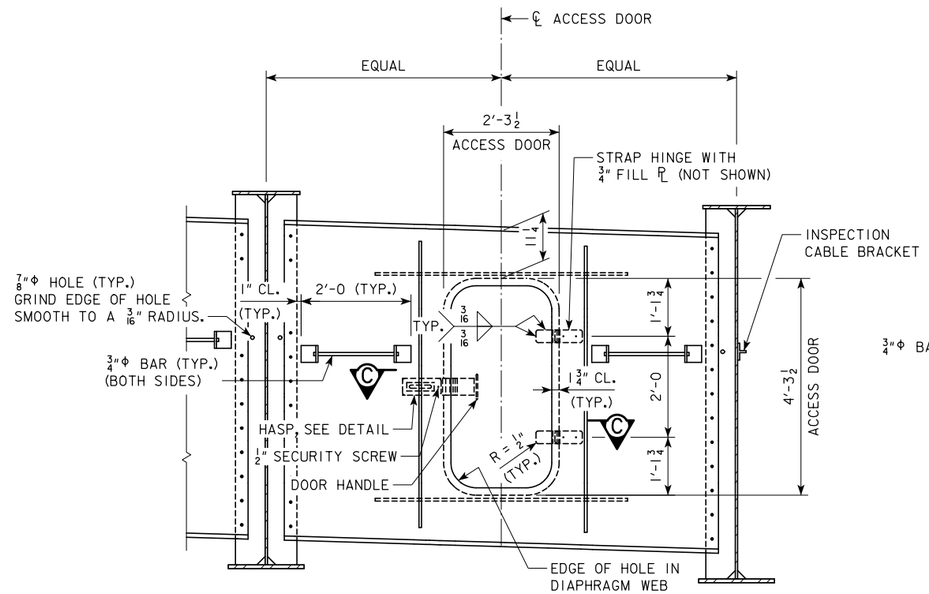

ACCESS DOOR ELEVATION

(LOOKING AHEAD STATION)

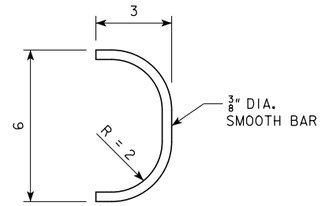

DOOR HANDLE DETAIL

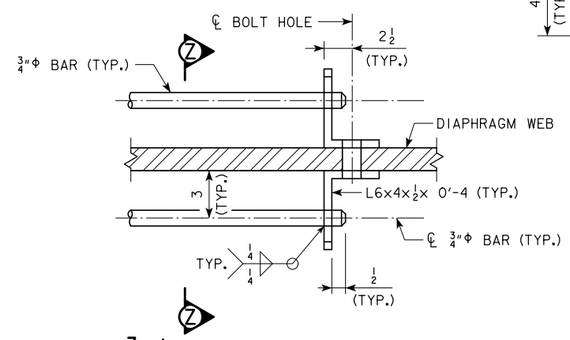

3/4"Φ BAR TERMINATION

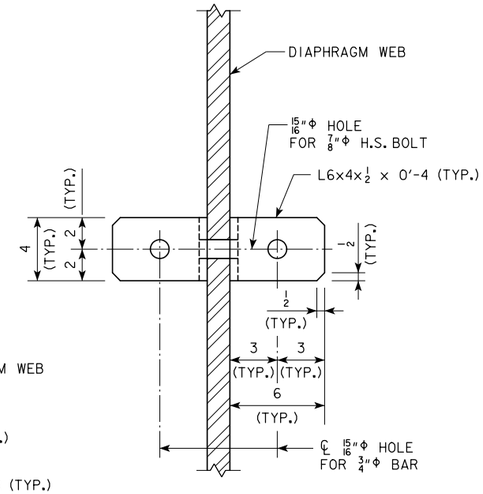

SECTION Z-Z

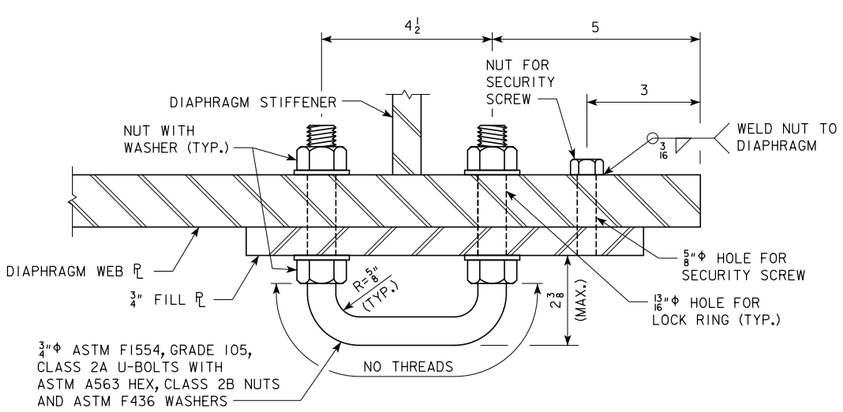

LOCK RING AND TIE-OFF LOCATION DETAIL

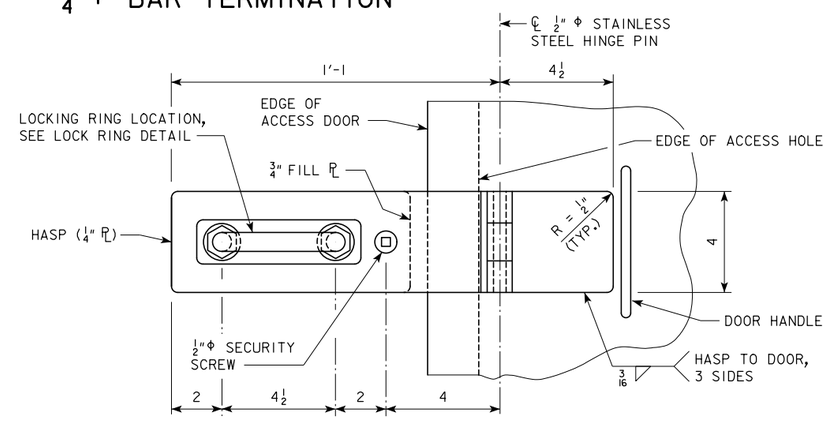

HASP WITH LOCK RING DETAIL

ACCESS DOOR NOTES:

STAINLESS STEEL HINGE PIN SHALL BE ASTM A176 OR ASTM A276.

SECURITY SCREWS TO BE KEYED-LOK TYPE AS MANUFACTURED BY BRYCE FASTENER OR APPROVED EQUAL AND SHALL CONFORM TO ASTM F593 (STAINLESS STEEL). CONTRACTOR TO PROVIDE IaDOT WITH 5 ADDITIONAL SECURITY SCREWS AND 5 COMPATIBLE BITS.

CONTRACTOR TO PROVIDE HEAVY-DUTY CASE HARDENED STEEL PADLOCKS AT ALL ACCESS DOORS. THE LOCKS ARE TO BE KEYED ALIKE SO THE SAME KEY WILL OPEN ALL THE LOCKS. THE LOCKS ARE TO HAVE A 5/16" MINIMUM DIAMETER SHACKLE, 5-PIN TUMBLER, AND A MINIMUM VERTICAL CLEARANCE BETWEEN THE SHACKLE AND BODY ONLY AS REQUIRED TO PERMIT INSTALLATION (NO EXCESS CLEARANCE). CONTRACTOR SHALL SUBMIT MANUFACTURER'S INFORMATION TO THE ENGINEER FOR REVIEW AND APPROVAL.

THE 5/8" RUBBER SEAL IS TO BE GLUED TO THE DIAPHRAGM WEB WITH A MANUFACTURER APPROVED ADHESIVE.

LOCK RING AND TIE-OFF LOCATION HARDWARE SHALL BE GALVANIZED ACCORDING TO ASTM A153, CLASS C.

STAINLESS STEEL HINGE PIN, SECURITY SCREW, BITS, PADLOCKS, RUBBER SEAL AND ADHESIVE, BOLTS, NUTS, STRAP HINGE AND HASP SHALL BE INCIDENTAL TO THE BID ITEM "STRUCTURAL STEEL".

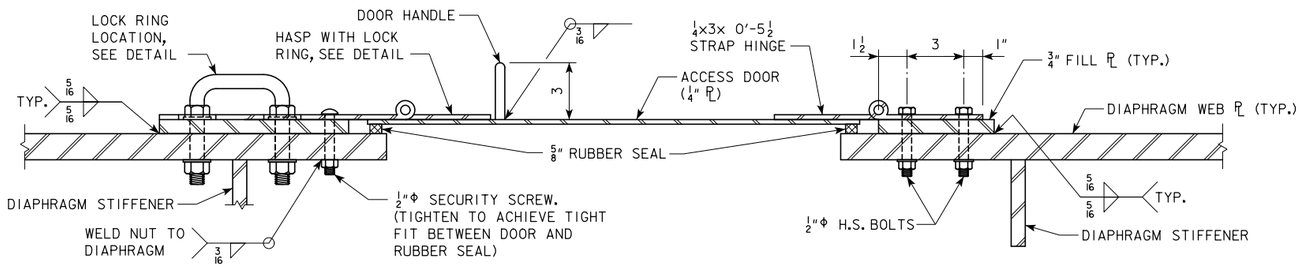

SECTION C-C

DESIGN FOR 0° SKEW ON 3,300' RADIUS CURVE

566'-6 X VARIES CONTINUOUS WELDED GIRDER BRIDGE

171'-0, 226'-0, 169'-6 SPANS

INSPECTION ACCESS DOOR DETAILS

STA. 2543+48.27 (℄ RAMP B) APRIL 2018

JOHNSON COUNTY

IOWA DEPARTMENT OF TRANSPORTATION - HIGHWAY DIVISION

DESIGN SHEET NO. 16 OF 31 FILE NO. 30864 DESIGN NO. 420