PIER CONCRETE TEXTURE NOTES:

THIS WORK CONSISTS OF APPLYING TEXTURED FINISHES ON ALL DESIGNATED CONCRETE SURFACES OF THE PIERS SHOWN IN THIS PLAN. SEE 'GENERAL NOTES FOR TEXTURED CONCRETE FORM LINERS' ON DESIGN SHEET 4 FOR MORE INFORMATION REGARDING THE USE OF FORM LINERS. THE TEXTURED CONCRETE MOCKUP PANEL DETAILED AND PAID FOR AS PART OF DESIGN NO. 120 OF THIS PROJECT MUST BE REVIEWED AND APPROVED BY THE ENGINEER BEFORE BEGINNING PRODUCTION CONCRETE WORK THAT INCLUDES TEXTURE.

THE FORM LINER USED TO PRODUCE TEXTURE 'A' AS SHOWN IN THE PLAN DETAILS SHALL PRODUCE A TEXTURED EFFECT OF ALTERNATING 10-INCH AND 4-INCH TALL COURSES OF CUT STONE IN RANDOM LENGTHS WITH SIMULATED MORTAR JOINTS. DEPTH OF TEXTURE SHALL BE 0.3125 INCH.

OBTAIN TEXTURE 'A' FORM LINER MATERIALS FROM ONE OF THE FOLLOWING MANUFACTURERS:

1. CUSTOM ROCK INTERNATIONAL (PATTERN NO. 12008)
2. FITZGERALD FORMLINERS (PATTERN NO. 17003)
3. SUBMIT ALL OTHER MANUFACTURERS AND PATTERNS INCLUDING A 1 FOOT BY 1 FOOT SAMPLE OF PROPOSED FORM LINER TO THE IOWA DEPARTMENT OF TRANSPORTATION, OFFICE OF BRIDGES AND STRUCTURES, AMES, IOWA. SAMPLE MAY BE EITHER ACTUAL FORM LINER MATERIALS OR FOAM CASTINGS. NO SAMPLES ARE REQUIRED TO BE SUBMITTED FOR MANUFACTURERS AND PATTERNS LISTED ABOVE.

THE FORM LINER USED TO PRODUCE TEXTURE 'B' AS SHOWN IN THE PLAN DETAILS SHALL PRODUCE A TEXTURED EFFECT OF A REALISTIC FRACTURED ROCK FACE WITH NO SIMULATED MASONRY JOINTS. DEPTH OF TEXTURE SHALL BE 1 INCH.

OBTAIN TEXTURE 'B' FORM LINER MATERIALS FROM ONE OF THE FOLLOWING MANUFACTURERS:

1. CUSTOM ROCK INTERNATIONAL (PATTERN NO. T325)
2. FITZGERALD FORMLINERS (PATTERN NO. 17030)
3. SUBMIT ALL OTHER MANUFACTURERS AND PATTERNS INCLUDING A 1 FOOT BY 1 FOOT SAMPLE OF PROPOSED FORM LINER TO THE IOWA DEPARTMENT OF TRANSPORTATION, OFFICE OF BRIDGES AND STRUCTURES, AMES, IOWA. SAMPLE MAY BE EITHER ACTUAL FORM LINER MATERIALS OR FOAM CASTINGS. NO SAMPLES ARE REQUIRED TO BE SUBMITTED FOR MANUFACTURERS AND PATTERNS LISTED ABOVE

PRIOR TO BEGINNING ANY PRODUCTION CONCRETE WORK THAT INCLUDES TEXTURE, SUBMIT MANUFACTURER'S CUT SHEETS FOR FORM LINERS.

ALL COSTS ASSOCIATED WITH CONCRETE TEXTURES AND FORM LINERS AT THE PIER SHALL BE INCLUDED IN THE BID ITEM, "HIGH PERFORMANCE STRUCTURAL CONCRETE".

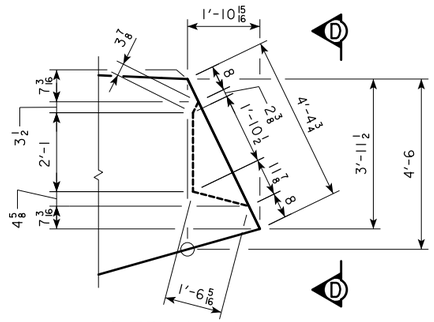

DETAIL 1

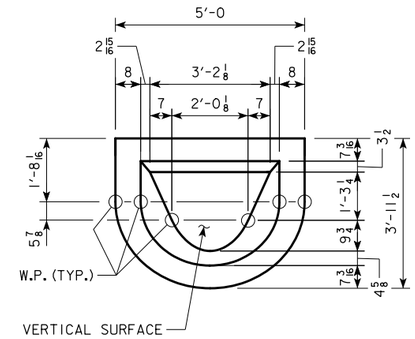

VIEW D-D

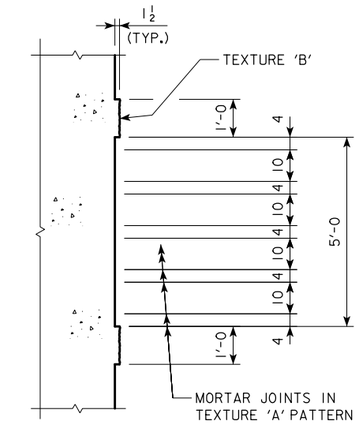

PART SECTION A-A

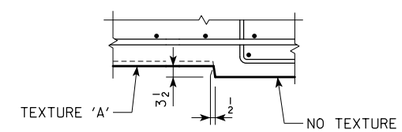

PART SECTION B-B

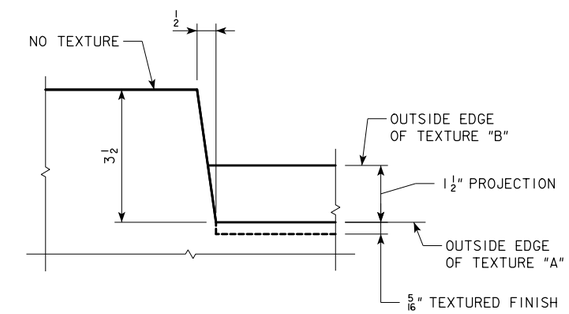

PART SECTION C-C

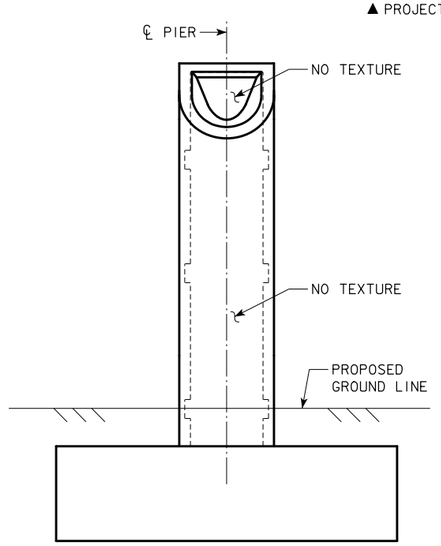

PIER END ELEVATION

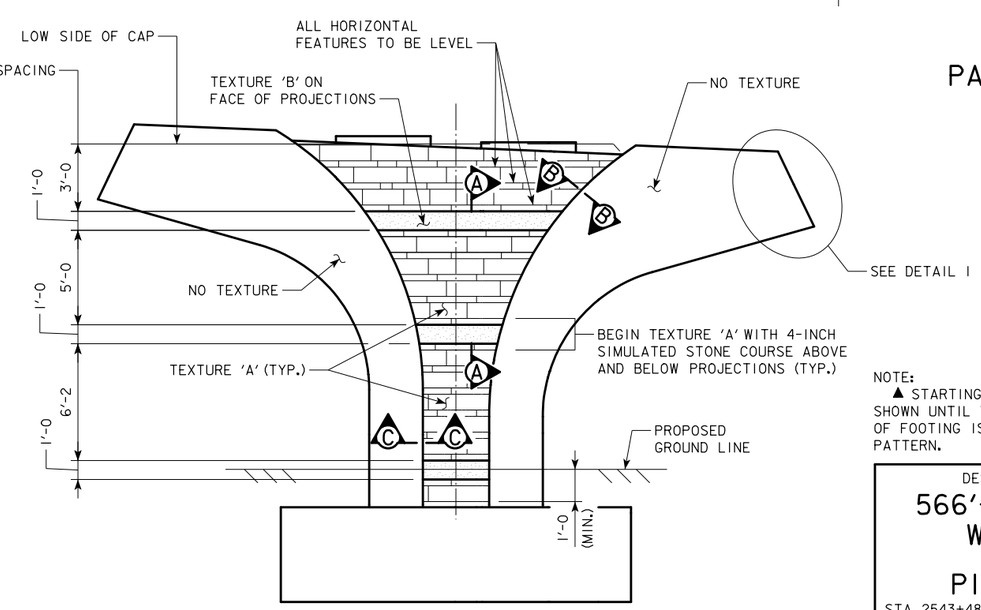

PIER ELEVATION

(PIER NO. 6A SHOWN, PIER NO. 7A SIMILAR)

NOTE:

▲ STARTING FROM THE TOP OF CAP, SPACE THE PROJECTIONS AS SHOWN UNTIL THE DISTANCE FROM THE LOWEST PROJECTION TO TOP OF FOOTING IS LESS THAN THE NEXT REQUIRED DIMENSION IN THE PATTERN.

DESIGN FOR 0° SKEW ON 3,300' RADIUS CURVE

566'-6 X VARIES CONTINUOUS WELDED GIRDER BRIDGE

171'-0, 226'-0, 169'-6 SPANS

PIER AESTHETIC DETAILS

STA. 2543+48.27 (℄ RAMP B) APRIL 2018

JOHNSON COUNTY

IOWA DEPARTMENT OF TRANSPORTATION - HIGHWAY DIVISION

DESIGN SHEET NO. 10 OF 31 FILE NO. 30864 DESIGN NO. 420

HDR