PIER NOTES:

MINIMUM CLEAR DISTANCE FROM FACE OF CONCRETE TO NEAR REINFORCING BAR IS TO BE 2" UNLESS OTHERWISE NOTED OR SHOWN IN THE PLANS.

ALL BATTERED PILE SHALL BE TRIMMED TO A HORIZONTAL LINE TO AID IN THE PLACEMENT OF REINFORCING.

WELDING OF ANCHOR BOLTS SHALL NOT BE ALLOWED. THE CONTRACTOR SHALL OBTAIN A TEMPLATE FROM THE MANUFACTURER/FABRICATOR FOR PROPER PLACEMENT OF THE ANCHOR BOLTS.

TOP OF PIER AT BEARING PEDESTALS SHALL HAVE A 2x12x 2'-0 BEVELED KEYWAY INSET CENTERED UNDER BEARING PEDESTAL.

TOP OF FOOTING SHALL HAVE A 3x10x 4'-0 BEVELED KEYWAY INSET INTO FOOTING CENTERED UNDER PIER COLUMN.

PIER PEDESTAL ELEVATIONS AND PEDESTAL HEIGHTS ARE DEPENDENT ON FINAL BEARING HEIGHT, WHICH SHALL BE DETERMINED BY BEARING MANUFACTURER. CONTRACTOR SHALL VERIFY BEARING HEIGHT WITH MANUFACTURER, AND ADJUST ELEVATIONS IF NECESSARY, PRIOR TO PLACING CONCRETE.

PIER PILES SHALL BE EMBEDDED 1'-0 INTO FOOTING.

THE BOTTOM MATT OF PIER FOOTING REINFORCING SHALL BE PLACED WITH 1" CLEAR COVER TO TOP OF PILES.

PIER FORMS NOTES:

THE USE OF STEEL FORMS IS REQUIRED FOR THE FORMING OF ALL PIER CONCRETE SURFACES FROM THE TOP OF FOOTING TO THE TOP OF PIER CAP. USE OF UNFACED LUMBER OR PLYWOOD IS ALLOWED ONLY FOR BLOCKING AND SPACERS TO CREATE RECESSES AND TO SUPPORT FORM LINERS. DO NOT USE PLAIN PLYWOOD-FACED FORMS OR PLAIN LUMBER FOR ANY PORTION OF THE FINISHED PIER COLUMN OR CAP SURFACES.

PIER NO. 6A PILE NOTES:

THE CONTRACT LENGTH OF 95 FEET FOR THE PIER NO. 6A PILES IS BASED ON A COHESIVE SOIL CLASSIFICATION, A TOTAL FACTORED AXIAL LOAD PER PILE (PU) OF 276 KIPS, AND A GEOTECHNICAL RESISTANCE FACTOR (PHI) OF 0.65. PIER PILES ALSO WERE DESIGNED FOR A FACTORED TENSION FORCE OF 25 KIPS.

THE NOMINAL AXIAL BEARING RESISTANCE FOR CONSTRUCTION CONTROL WAS DETERMINED FROM A COHESIVE SOIL CLASSIFICATION AND A GEOTECHNICAL RESISTANCE FACTOR (PHI) OF 0.76. PILES ARE ASSUMED TO BE DRIVEN FROM A START ELEVATION AT THE BOTTOM OF FOOTING.

THE REQUIRED NOMINAL AXIAL BEARING RESISTANCE FOR PIER NO. 6A PILES IS 182 TONS AT END OF DRIVE. IF RETAPS ARE NECESSARY TO ACHIEVE BEARING, THE REQUIRED NOMINAL AXIAL BEARING RESISTANCE IS 212 TONS AT ONE-DAY OR LATER RETAPS. THE PILE CONTRACT LENGTH SHALL BE DRIVEN AS PER PLAN UNLESS PILES REACH REFUSAL. IN NO CASE SHALL A PILE BE EMBEDDED LESS THAN 15 FEET. CONSTRUCTION CONTROL REQUIRES A WEAP ANALYSIS WITH BEARING GRAPH.

BATTER PILES 1:4 IN DIRECTION SHOWN IN THE DIGITAL FILES.

18 - HP14x73 STEEL BEARING PILING ARE REQUIRED.

PIER NO. 7A PILE NOTES:

THE CONTRACT LENGTH OF 95 FEET FOR THE PIER NO. 7A PILES IS BASED ON A COHESIVE SOIL CLASSIFICATION, A TOTAL FACTORED AXIAL LOAD PER PILE (PU) OF 279 KIPS, AND A GEOTECHNICAL RESISTANCE FACTOR (PHI) OF 0.65. PIER PILES ALSO WERE DESIGNED FOR A FACTORED TENSION FORCE OF 28 KIPS.

THE NOMINAL AXIAL BEARING RESISTANCE FOR CONSTRUCTION CONTROL WAS DETERMINED FROM A COHESIVE SOIL CLASSIFICATION AND A GEOTECHNICAL RESISTANCE FACTOR (PHI) OF 0.76. PILES ARE ASSUMED TO BE DRIVEN FROM A START ELEVATION AT THE BOTTOM OF FOOTING.

THE REQUIRED NOMINAL AXIAL BEARING RESISTANCE FOR PIER NO. 7A PILES IS 181 TONS AT END OF DRIVE. IF RETAPS ARE NECESSARY TO ACHIEVE BEARING, THE REQUIRED NOMINAL AXIAL BEARING RESISTANCE IS 215 TONS AT ONE-DAY OR LATER RETAPS. THE PILE CONTRACT LENGTH SHALL BE DRIVEN AS PER PLAN UNLESS PILES REACH REFUSAL. IN NO CASE SHALL A PILE BE EMBEDDED LESS THAN 20 FEET. CONSTRUCTION CONTROL REQUIRES A WEAP ANALYSIS WITH BEARING GRAPH.

BATTER PILES 1:4 IN DIRECTION SHOWN IN THE DIGITAL FILES.

19 - HP14x73 STEEL BEARING PILING ARE REQUIRED.

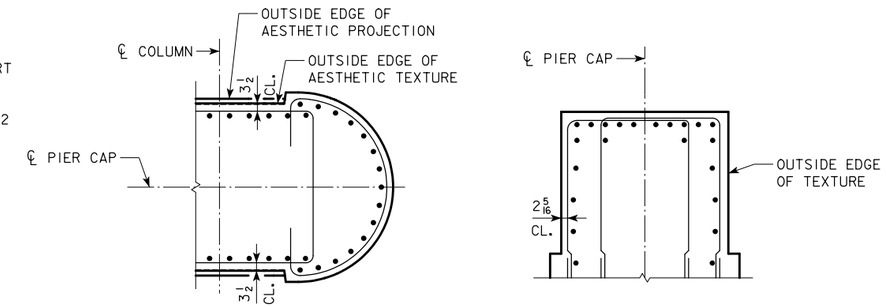

PART SECTION THRU COLUMN PART SECTION THRU CAP

PIER REINFORCING CLEARANCE DETAILS

DESIGN FOR 0° SKEW ON 3,300' RADIUS CURVE

566'-6 X VARIES CONTINUOUS WELDED GIRDER BRIDGE

171'-0, 226'-0, 169'-6 SPANS

PIER NOTES

STA. 2543+48.27 (℄ RAMP B) APRIL 2018

JOHNSON COUNTY

IOWA DEPARTMENT OF TRANSPORTATION - HIGHWAY DIVISION

DESIGN SHEET NO. 5 OF 31 FILE NO. 30864 DESIGN NO. 420

HDR