LETTING DATE 7/9/2019

BRIDGE NEW - PPCB
NHSX-002-1(123)--3H-36

FREMONT COUNTY

LEGEND

INTERSTATE HIGHWAY
PRIMARY HIGHWAY-DIVIDED
PRIMARY HIGHWAY
PORTLAND CEMENT CONCRETE ROAD
ASPHALT ROAD
BITUMINOUS ROAD
GRAVEL ROAD
EARTHEN ROAD
INTERSTATE HIGHWAY (80)
UNITED STATES HIGHWAY (65)
STATE HIGHWAY (175)
COUNTY HIGHWAY (S27)
RAILROAD
PIPELINE
AIRPORT
HYDROLOGY
BRIDGE
STATE BOUNDARY
COUNTY BOUNDARY
CORPORATE BOUNDARY
TOWNSHIP LINE
SECTION LINE
ROAD NAMES — ABBEY ROAD
UNINCORPORATED PLACE — ELWOOD

IOWA DOT
Highway Division

PLANS OF PROPOSED IMPROVEMENTS ON THE

PRIMARY ROAD SYSTEM

FREMONT COUNTY

BRIDGE NEW - PPCB

IA 2 OVER MISSOURI RIVER OVERFLOW

THE IOWA DEPARTMENT OF TRANSPORTATION STANDARD SPECIFICATIONS FOR HIGHWAY AND BRIDGE CONSTRUCTION, SERIES 2015, PLUS APPLICABLE GENERAL SUPPLEMENTAL SPECIFICATIONS, DEVELOPMENTAL SPECIFICATIONS, SUPPLEMENTAL SPECIFICATIONS AND SPECIAL PROVISIONS SHALL APPLY TO CONSTRUCTION WORK ON THIS PROJECT.

ENGLISH STANDARD BRIDGE PLANS		
STANDARD	ISSUED	REVISED

	TOTAL SHEETS
	?
PROJECT NUMBER	
NHSX-002-1(123)--3H-36	
R.O.W. PROJECT NUMBER	
?	
PROJECT IDENTIFICATION NUMBER	
19-36-002-070	

INDEX OF SHEETS

NO.	DESCRIPTION
1	TITLE SHEET
2	ESTIMATE SHEET - DESIGN 119
2-?	DESIGN 119
?	ESTIMATE SHEET - DESIGN 219
?-?	DESIGN 219
?	SOIL PROFILE SHEET
?	ESTIMATE SHEET FOR ROADWAY
?	ROADWAY SHEETS

REVISIONS

IOWA ONE CALL
1-800-292-8989
www.iowaonecall.com
811 Know what's below. Call before you dig.

REVISIONS TO THIS DESIGN PLAN AND/OR PROJECT SPECIFICATIONS SHOULD BE SUBMITTED BY _____

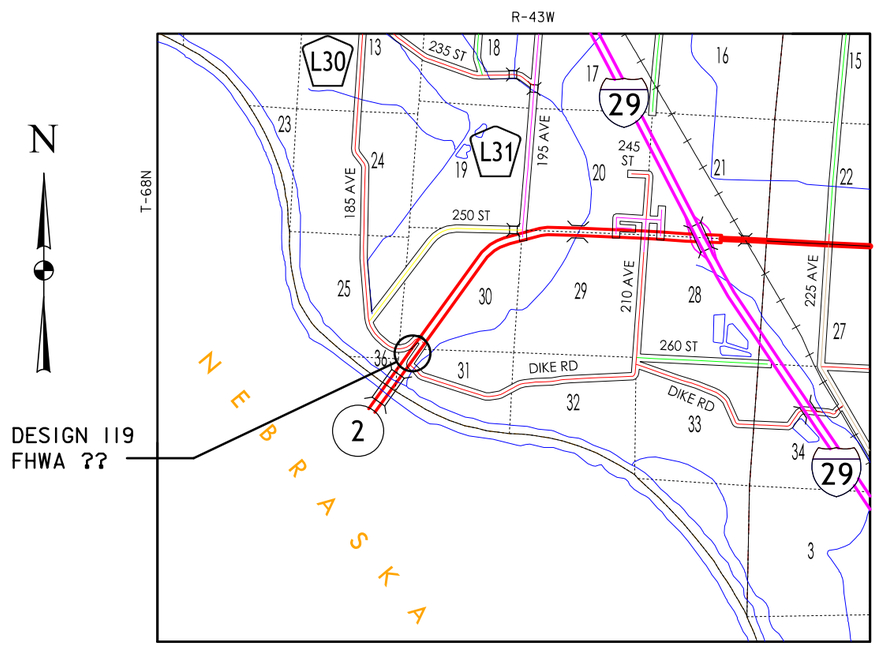

LOCATION MAP

STANDARD ROAD PLANS

STANDARD ROAD PLANS ARE LISTED ON SHEET NUMBER _____

DESIGN DATA RURAL

2016 AADT	8,200	V.P.D.
TRUCKS	20	%
Total Design ESALs	47,900,000	

INDEX OF SEALS

SHEET NO.	NAME	TYPE
	ANTHONY J. BOWER	STRUCTURAL DESIGN
	MARK D. WERNER	HYDRAULIC DESIGN

PRELIMINARY
NOT FOR CONSTRUCTION

IN-PROGRESS PLANS
6/10/2019

IN-PROGRESS PLANS - 6/10/2019
NOT FOR CONSTRUCTION

STRUCTURAL DESIGN

LICENSED PROFESSIONAL ENGINEER Anthony J. Bower 19231 IOWA

I hereby certify that this engineering document was prepared by me or under my direct personal supervision and that I am a duly licensed Professional Engineer under the laws of the State of Iowa.

Signature _____ Date _____
Anthony J. Bower
Printed or Typed Name

My license renewal date is December 31, 2020

Pages or sheets covered by this seal: SHEETS ? THRU ? OF ?

PROJECT DIRECTORY NAME: 3600207019

FREMONT COUNTY - DESIGN 119

ESTIMATED BRIDGE QUANTITIES - DESIGN 119

ITEM NO.	ITEM CODE	ITEM	UNIT	TOTAL 1	TOTAL 2 ALTERNATE OPTION 1	TOTAL 3 ALTERNATE OPTION 2	AS BUILT QUANTITY
1.	2402-2720000	EXCAVATION, CLASS 20	CY	4815	816	538	
2.	2403-0100010	STRUCTURAL CONCRETE (BRIDGE)	CY	1420	543	1964	
3.	2404-7775000	REINFORCING STEEL	LB		141900	???	
4.	2404-7775005	REINFORCING STEEL, EPOXY COATED	LB	387820			
5.	2404-7775009	REINFORCING STEEL, STAINLESS STEEL	LB	16368			
6.	2405-2705000	EXCAVATE AND DEWATER	EACH		1.0		
7.	2407-0564355	BEAMS, PRETENSIONED PRESTRESSED CONCRETE, BTE 155	EACH	42			
8.	2408-7800000	STRUCTURAL STEEL	LB	55885			
9.	2414-6424110	CONCRETE BARRIER RAILING	LF	2261			
10.	2499-2300001	DECK DRAINS	LS	1.0			
11.	2501-0201042	PILES, STEEL, HP 10x42	LF	3840			
12.	2501-0201517	PILES, STEEL, HP 14x117	LF		14400	18720	
13.	2507-2638650	BRIDGE WING ARMORING - EROSION STONE	SY	14.5			
14.	2507-3250005	ENGINEERING FABRIC	SY	5281			
15.	2507-6800061	REVETMENT, CLASS E	TON	5054			
16.	2507-8029000	EROSION STONE	TON	13.5			
17.	2526-8285000	CONSTRUCTION SURVEY	LS	1.0			
18.	2533-4980005	MOBILIZATION	LS	1.0			
19.	2599-9999005	EXPANSION JOINT (DRAINAGE SYSTEM)	EACH	2.0			
20.	2599-9999009	EXPANSION JOINT (FINGER PLATES)	LF	80.0			
21.	2599-9999010	TEMPORARY DETOUR BRIDGE SUPERSTRUCTURE	LS	1.0			

ESTIMATE REFERENCE INFORMATION

ITEM NO.	DESCRIPTION
2.	INCLUDES THE CONCRETE FOR THE ABUTMENTS, SLABS, PIERS AND WINGWALLS. INCLUDES FURNISHING AND PLACING SUBDRAIN (INCLUDING EXCAVATION), FLOODABLE BACKFILL, POROUS BACKFILL, GEOTEXTILE FABRIC, WATER FLOODING, AND SUBDRAIN OUTLETS AT ABUTMENTS. INCLUDES FURNISHING AND PLACING 3 INCH DIAMETER PVC PLASTIC PIPE AND EXPANDING FOAM IN THE ABUTMENT WINGS. INCLUDES FURNISHING AND APPLYING CONCRETE SEALER TO ABUTMENT BRIDGE SEATS AND ON BEAM ENDS AT ABUTMENTS.
3.	FURNISHING AND INSTALLING COIL TIES AND THREADED COIL RODS IN THE ABUTMENTS AND PIERS IS INCLUDED IN THIS ITEM. NO QUANTITY CALCULATED FOR THESE ITEMS. INCLUDES MECHANICAL SPLICERS IN THE ABUTMENT FOOTINGS AND PIER CAPS.
4.	INCLUDES XXXX LBS. IN THE SUBSTRUCTURE AND XXXX LBS. IN SUPERSTRUCTURE. INCLUDES MECHANICAL SPLICERS IN THE ABUTMENT BACKWALLS.
6.	FOR PIERS IN ACCORDANCE WITH ARTICLE 2405 OF THE STANDARD SPECIFICATIONS. THE DESIGN IS BASED ON SEAL COAT DIMENSIONS OF 18' X 12' X MIN. 3'. PAYMENT IS FOR FULL COMPENSATION FOR CLASS 20 AND CLASS 21 EXCAVATION, COFFERDAMS AND TREMIE CONCRETE SEALS (IF USED), COSTS OF OTHER PROCEDURES REQUIRED TO DEWATER THE EXCAVATIONS, PUMPING, BAILING AND DRAINAGE, AND MATERIALS, WORK, LABOR, AND EQUIPMENT REQUIRED TO PLACE THE FOOTINGS AND PIERS IN THE DRY.
7.	COARSE AGGREGATES FOR PRESTRESSED CONCRETE BRIDGE UNITS SHALL BE IN ACCORDANCE WITH THE REQUIREMENTS OF SECTION 4115 CLASS III DURABILITY. GRADATION OF THE COARSE AGGREGATE SHALL BE IN ACCORDANCE WITH THE REQUIREMENTS OF ARTICLE 2407.02, A, OF THE STANDARD SPECIFICATIONS. INCLUDES NEOPRENE PADS AND LAMINATED NEOPRENE BEARING PADS.
8.	INCLUDES FURNISHING AND INSTALLING STEEL INTERMEDIATE DIAPHRAGMS.
9.	IF PLACEMENT OF CONCRETE IS DONE BY THE SLIPFORMING METHOD, CLASS BR CONCRETE IS REQUIRED. CAST-IN-PLACE BARRIER RAILS SHALL USE CLASS C MIX. PRICE BID FOR THIS ITEM SHALL INCLUDE THE COST OF CAST-IN-PLACE FORMS IF REQUIRED FOR PLACEMENT OF CONCRETE. SEE BARRIER RAIL NOTES ON DESIGN SHEETS XX FOR MORE INFORMATION. INCLUDES XXXX FEET OF 2 INCH DIAMETER RIGID STEEL CONDUIT. INCLUDES MATERIAL AND LABOR ASSOCIATED WITH PROVIDING AND INSTALLING RIGID STEEL CONDUIT, JUNCTION BOXES AND EXPANSION FITTINGS.

ITEM NO.	DESCRIPTION
10.	INCLUDES XX DECK DRAINS. MEASUREMENT OF THE DECK DRAIN WILL BE LUMP SUM FOR ALL DECK DRAINS REQUIRED AS SPECIFIED IN THE PLANS. PAYMENT FOR THE QUANTITY OF DECK DRAIN WILL BE THE CONTRACT UNIT PRICE. PAYMENT IS FULL COMPENSATION FOR FURNISHING ALL MATERIALS, EQUIPMENT, AND LABOR NECESSARY TO FABRICATE AND INSTALL THE DECK DRAINS AS PER PLAN. SEE DESIGN SHEET XX FOR LOCATIONS, MATERIALS, AND THE DETAILS OF THEIR CONSTRUCTION.
11.	INCLUDES FURNISHING AND INSTALLING STEEL PILE POINTS. PILING SHALL BE GRADE 50. SPLICES BETWEEN INDIVIDUAL LENGTHS OF PILE SHALL CONSIST OF FULL PENETRATION WELDS IN ACCORDANCE WITH SECTION 2501.03,P,2 OF THE STANDARD SPECIFICATIONS.
12.	INCLUDES FURNISHING AND INSTALLING STEEL PILE POINTS. PILING SHALL BE GRADE 50. SPLICES BETWEEN INDIVIDUAL LENGTHS OF PILE SHALL CONSIST OF FULL PENETRATION WELDS IN ACCORDANCE WITH SECTION 2501.03,P,2 OF THE STANDARD SPECIFICATIONS.
13.	INCLUDES FURNISHING AND PLACING ENGINEERING FABRIC, EROSION STONE, AND ALL REQUIRED EXCAVATING, SHAPING AND COMPACTING FOR WING ARMORING.
14.	ENGINEERING FABRIC SHALL BE MATERIAL AS SPECIFIED FOR REVETMENT, ARTICLE 4196.01,B,6 AND EMBANKMENT EROSION CONTROL, ARTICLE 4196.01,B,3 OF THE STANDARD SPECIFICATIONS.
15.	ESTIMATED AT 1.6 TON/CY. BROKEN CONCRETE WILL NOT BE ALLOWED AS A SUBSTITUTE FOR REVETMENT.
16.	ESTIMATED AT 1.6 TON/CY.
19.	INCLUDES FULL COMPENSATION FOR THE FURNISHING, INSTALLING AND TESTING THE DRAINAGE SYSTEM UNDER THE FINGER JOINT AT THE ABUTMENTS AS DETAILED AND NOTED IN THESE PLANS. INCLUDES ALL NECESSARY HARDWARE AND ACCESSORIES NOT INCLUDED IN THE PRICE BID FOR "EXPANSION JOINT (FINGER PLATES)". INCLUDES ALL COSTS ASSOCIATED WITH FABRICATING, FURNISHING, AND INSTALLING NEOPRENE CURTAINS, NEOPRENE TROUGHS, CONCRETE ANCHORS, HANGER PLATES, ANGLES, AND ALL ASSOCIATED HARDWARE.
20.	INCLUDES FULL COMPENSATION FOR FURNISHING AN INSTALLING THE FINGER EXPANSION JOINT ASSEMBLY AT THE ABUTMENTS. THIS INCLUDES ALL NECESSARY HARDWARE AND ACCESSORIES INCLUDING THE FINGER PLATES, SUPPORT BRACKETS, ANCHOR PLATES, SHEAR STUDS, BOLTS, BARRIER RAIL PLATES, BENT PLATES, CAP SCREWS, ASSOCIATED HARDWARE AND ALL TEMPORARY ERECTION MATERIAL. ALSO INCLUDES ALL MISCELLANEOUS MATERIALS REQUIRED FOR CONSTRUCTION OF THE FINGER JOINTS INCLUDING FIELD WELDS.
21.	PAYMENT FOR "TEMPORARY DETOUR BRIDGE SUPERSTRUCTURE" WILL BE THE LUMP SUM CONTRACT PRICE. PAYMENT WILL BE FULL COMPENSATION FOR RENT, DELIVERY, ASSEMBLING, ERECTING, DISASSEMBLING, INSPECTING, MAINTAINING AND RETURNING THE TEMPORARY DETOUR BRIDGE SUPERSTRUCTURE. ALL COSTS FOR EQUIPMENT, LABOR AND MATERIALS NEEDED TO COMPLETE, MAKE USE OF AND REMOVE THE TEMPORARY DETOUR BRIDGE SUPERSTRUCTURE SHALL BE INCLUDED IN THE CONTRACT PRICE.

DIVISIONS:

1 BID ITEMS THAT ARE COMMON TO ALL CONTRACTOR CHOICES

2 BID ALTERNATE OPTION 1 IF SELECTING FRAME PIER WITH FOOTINGS

3 BID ALTERNATE OPTION 2 IF SELECTING ENCASED PILE BENT

PROGRESS PLANS
6/10/2019

DESIGN FOR 0° SKEW

1097'-0 X 40'-0 PRETENSIONED PRESTRESSED CONCRETE BEAM E.B. BRIDGE

156'-0 END SPANS 157'-0 INTERIOR SPAN

ESTIMATED QUANTITIES

IA 2 STA. 400+85.00, RT. 32.00' JUNE 2019

FREMONT COUNTY

IOWA DEPARTMENT OF TRANSPORTATION - HIGHWAY DIVISION

DESIGN SHEET NO. 1 OF 2 FILE NO. 31719 DESIGN NO. 119

SUMMARY OF CONCRETE QUANTITIES

LOCATION	STRUCTURAL CONCRETE	HPC STRUCTURAL CONCRETE
WEST ABUT. FTG. + BKWL. + WING EXT. + MASKWALL	62.2	
EAST ABUT. FTG. + BKWL. + WING EXT. + MASKWALL	62.2	
BRIDGE DECK + ABUT. & PIER DIAPHRAGMS	1284.7	
ABUTMENT WINGS	10.8	
PIERS - OPTION 1	542.6	
PIERS - OPTION 2	1964	
TOTAL (CU. YDS.)	1419.9 + OPTION	

SUMMARY OF REINFORCING STEEL

LOCATION	NON-COATED REINFORCING STEEL	STAINLESS STEEL REINFORCING STEEL	EPOXY COATED REINFORCING STEEL
WEST ABUT. FTG. + BKWL. + WING EXT. + MASKWALL		100	8,000
EAST ABUT. FTG. + BKWL. + WING EXT. + MASKWALL		100	8,000
BRIDGE DECK **			330,000
ABUTMENT WINGS			1,168
BARRIER RAIL - NORTH RAIL		7,700	19,500
BARRIER RAIL - SOUTH RAIL		7,700	19,500
BARRIER RAIL END SECTION		4 AT 192	4 AT 266
PIERS - OPTION 1	141,900		
PIERS - OPTION 2	???		
CONDUIT SUPPORT BARS			588
** INCLUDES ABUTMENT & PIER DIAPHRAGMS FOR PCC			
TOTAL (LBS.)	OPTION	16,368	387,820

SUMMARY OF EXCAVATION

LOCATION	CLASS 20 EXCAVATION	CLASS ___ EXCAVATION
WEST ABUTMENT	30.2	
EAST ABUTMENT	30.2	
PIERS - OPTION 1	816	
PIERS - OPTION 2	538	
WEST ABUT. REVETMENT	2508	
EAST ABUT. REVETMENT	2246	
TOTAL (CU. YDS.)		

SUMMARY OF FOUNDATIONS

LOCATION	SUBSTRUCTURE TYPE	FOUNDATION TYPE	NUMBER	LENGTH (LIN. FT.)	TOTAL (LIN. FT.)
WEST ABUTMENT	STUB ABUTMENT	HP10x42	16	120	1920
EAST ABUTMENT	STUB ABUTMENT	HP10x42	16	120	1920
PIERS - OPTION 1	FRAME PIER	HP14x117	144	100	14400
PIERS - OPTION 2	ENCASED PILE BENT PIER	HP14x117	156	120	18720

SUMMARY OF STRUCTURAL STEEL

LOCATION	TOTAL (LBS.)
DIAPHRAGMS	33,226
ABUTMENT BEARINGS	5,046
PIER BEARINGS	17,613
TOTAL (LBS.)	

SUMMARY OF BEARINGS

LOCATION	BEARING TYPE	NUMBER	ASSOCIATED BID ITEM
WEST ABUTMENT	$17\frac{1}{2} \times 5\frac{7}{8} \times$ 2'-0 LAMINATED NEOPRENE PAD	6	INCIDENTAL ITEM
EAST ABUTMENT	$17\frac{1}{2} \times 5\frac{7}{8} \times$ 2'-0 LAMINATED NEOPRENE PAD	6	INCIDENTAL ITEM
PIER #1	15 x 5 x 2'-4 LAMINATED NEOPRENE PAD	12	INCIDENTAL ITEM
PIER #2	15 x 5 x 2'-4 LAMINATED NEOPRENE PAD	12	INCIDENTAL ITEM
PIER #3	PLAIN NEOPRENE 1"	12	INCIDENTAL ITEM
PIER #4	PLAIN NEOPRENE 1"	12	INCIDENTAL ITEM
PIER #5	15 x 5 x 2'-4 LAMINATED NEOPRENE PAD	12	INCIDENTAL ITEM
PIER #6	15 x 5 x 2'-4 LAMINATED NEOPRENE PAD	12	INCIDENTAL ITEM

PROGRESS PLANS
6/10/2019

DESIGN FOR 0° SKEW

1097'-0 X 40'-0 PRETENSIONED PRESTRESSED CONCRETE BEAM E.B. BRIDGE

156'-0 END SPANS 157'-0 INTERIOR SPAN

SUMMARY QUANTITIES SHEET

IA 2 STA. 400+85.00, RT. 32.00' JUNE 2019

FREMONT COUNTY

IOWA DEPARTMENT OF TRANSPORTATION - HIGHWAY DIVISION

DESIGN SHEET NO. 2 OF ? FILE NO. 31719 DESIGN NO. 119

GENERAL NOTES:

IT IS THE INTENT OF THIS DESIGN TO CONSTRUCT A NEW 7-SPAN 1097'-0 X 40'-0 PRETENSIONED PRESTRESSED CONCRETE BEAM BRIDGE ON EASTBOUND IA 2 OVER THE MISSOURI RIVER OVERFLOW.

THIS BRIDGE IS DESIGNED FOR HL-93 LOADING, PLUS 20 LBS. PER SQUARE FOOT OF ROADWAY FOR FUTURE WEARING SURFACE.

UTILITY COMPANIES WHOSE FACILITIES ARE SHOWN ON THE PLANS OR KNOWN TO BE WITHIN THE CONSTRUCTION LIMITS SHALL BE NOTIFIED BY THE BRIDGE CONTRACTOR OF THE STARTING DATE.

CLASS 20 EXCAVATION QUANTITIES ARE BASED ON THE ASSUMPTION THAT THE CHANNEL EXCAVATION IS COMPLETED PRIOR TO STARTING CONSTRUCTION OF THE ABUTMENTS AND PIERS.

CLASS 20 EXCAVATION MATERIAL UNSUITABLE FOR BACKFILLING SHALL BE DISPOSED OF IN A MANNER THAT WILL LEAVE THE SITE IN A NEAT CONDITION. IT SHALL BE THE BRIDGE CONTRACTOR'S RESPONSIBILITY TO PROVIDE SITES FOR EXCESS EXCAVATED MATERIAL. NO PAYMENT FOR OVERHAUL WILL BE ALLOWED FOR MATERIAL HAULED TO THESE SITES.

CAST IN-ONE-PIECE STEEL PILE POINTS ARE REQUIRED FOR ABUTMENT PILES IN ACCORDANCE WITH ARTICLE 4167.02 OF THE CURRENT STANDARD SPECIFICATIONS AND MATERIALS IM 468.

MINIMUM CLEAR DISTANCE FROM FACE TO FACE OF CONCRETE TO NEAR REINFORCING BAR IS TO BE 2" UNLESS OTHERWISE NOTED OR SHOWN.

SEE ROADWAY PLANS FOR GUARDRAIL BID ITEMS AND NOTES.

THE ROAD WILL BE OPEN TO TRAFFIC DURING CONSTRUCTION. SEE TRAFFIC CONTROL PLAN NOTE ON THIS SHEET.

ABUTMENT PILES SHALL NOT BE DRIVEN FOR A MINIMUM OF ?? DAYS FOLLOWING COMPLETION OF APPROACH FILLS. THE TIME PERIOD BETWEEN COMPLETION OF FILLS AND DRIVING PILES MAY BE CHANGED AS ORDERED BY THE ENGINEER BASED UPON REVIEW OF SETTLEMENT PLATES.

THE APPROACH FILLS AS SHOWN ARE TO BE IN PLACE BEFORE ABUTMENT PILES ARE DRIVEN. THE BRIDGE CONTRACTOR IS TO LEVEL OFF AND SHAPE THE BERMS TO THE ELEVATIONS AND DIMENSIONS SHOWN.

CONCRETE BARRIER RAILS PLACED USING THE SLIPFORM METHOD WILL REQUIRE THE USE OF A CLASS BR CONCRETE IN ACCORDANCE WITH ARTICLE 2513.03, A, 2, OF THE STANDARD SPECIFICATIONS. CAST-IN-PLACE BARRIER RAILS SHALL USE CLASS C MIX. CLASS D CONCRETE IS NOT PERMITTED FOR CONCRETE BARRIER RAILS (CAST-IN-PLACE OR SLIPFORMED METHOD).

CONCRETE FORMS ARE REQUIRED TO REMAIN IN PLACE 5 DAYS OR LONGER IN ACCORDANCE WITH ARTICLE 2403.03,M,2, OF THE STANDARD SPECIFICATIONS, EXCEPT THE MINIMUM CONCRETE FLEXURAL STRENGTH REQUIRED BEFORE REMOVAL OF FORMS SHALL BE 575 PSI.

THE CONTRACTOR SHALL BE RESPONSIBLE FOR ENSURING STABILITY OF PRESTRESSED CONCRETE BEAMS DURING ERECTION AND CONSTRUCTION UP THROUGH THE CONCRETE BRIDGE DECK REACHING ITS FULL 28-DAY STRENGTH. THE CONTRACTOR SHALL PROVIDE SUFFICIENT TEMPORARY ANCHOR BRACING AT BEAM ENDS AND TEMPORARY INTERMEDIATE BRACING AS NEEDED TO ENSURE PRESTRESSED BEAM STABILITY. PARTIALLY OR FULLY INSTALLED PERMANENT BRACING AS SHOWN IN THESE DESIGN PLANS SHALL NOT BE ASSUMED SUFFICIENT TO BRACE PRESTRESSED BEAMS DURING ERECTION AND CONSTRUCTION. TEMPORARY BRACING SHALL NOT BE WELDED TO PRESTRESSED BEAM STIRRUPS.

THE BRIDGE CONTRACTOR IS TO INSTALL SUBDRAINS BEHIND THE ABUTMENTS AS DETAILED. THE SUBDRAINS SHALL BE 4" DIAMETER PERFORATED SUBDRAIN (POLYETHYLENE CORRUGATED TUBING). THE SUBDRAIN SHALL INCLUDE A METAL PIPE OUTLET SECTION WITH A REMOVABLE RODENT GUARD AS DETAILED IN THESE PLANS.

SEE ROADWAY PLANS FOR LONGITUDINAL GROOVING BID ITEMS AND NOTES.

404 PERMIT INFORMATION AND THE POLLUTION PREVENTION PLAN ARE INCLUDED IN THE TIED ROAD PLANS, PROJECT NO. ?.

ROADWAY QUANTITIES ARE INCLUDED IN THE TIED ROAD PLANS, PROJECT NO. ?.

KEYWAY DIMENSIONS SHOWN ON THE PLANS ARE BASED ON NOMINAL DIMENSIONS UNLESS STATED OTHERWISE. IN ADDITION, THE BEVEL USED ON THE KEYWAY SHALL BE LIMITED TO A MAXIMUM OF 10 DEGREES FROM VERTICAL.

IF DECK HANGERS ARE EMBEDDED IN PRESTRESSED BEAMS, THEY SHALL BE COATED USING ONE OF THE FOLLOWING METHODS:

1. ELCTROPLATING IN ACCORDANCE WITH ASTM B633, SERVICE CONDITION SC4, REQUIRED COATING THICKNESS OF 1.0 MIL. CLASSIFICATION OF COATING SUFFIX: Fe/Zn 25.

2. MECHANICAL GALVANIZING IN ACCORDANCE WITH ASTM B695, TYPE 1, CLASS 50. MINIMUM COATING THICKNESS SHALL BE 2 MILS.

SUBDRAIN SLOPED DOWNWARD 2% PER FOOT FROM CENTERLINE APPROACH ROADWAY TO EXTEND THRU FILL (TYPICAL BOTH ABUTMENTS).

THIS STRUCTURE IS TO BE BUILT UNDER THE CONDITIONS OF DNR FLOOD PLAIN DEVELOPMENT PERMIT NUMBER ____.

THIS PROJECT SHALL BE CONSTRUCTED IN ACCORDANCE WITH THE REQUIREMENTS OF U.S. ARMY CORPS OF ENGINEERS (Insert NATIONWIDE PERMIT # or REGIONAL PERMIT 7 or INDIVIDUAL PERMIT as appropriate), PERMIT NO. (Insert the corps' project-specific permit number, if applicable). A COPY OF THIS PERMIT IS AVAILABLE FROM THE IOWA DOT OFFICE OF CONTRACTS UPON REQUEST. THE U.S. ARMY CORPS OF ENGINEERS RESERVES THE RIGHT TO VISIT THE SITE WITHOUT PRIOR NOTICE.

THESE BRIDGE PLANS LABEL ALL REINFORCING STEEL WITH ENGLISH NOTATION (5al IS $\frac{5}{8}$ INCH DIAMETER BAR). ENGLISH REINFORCING STEEL RECEIVED IN THE FIELD MAY DISPLAY THE FOLLOWING "BAR DESIGNATION". THE "BAR DESIGNATION" IS THE STAMPED IMPRESSION ON THE REINFORCING BARS, AND IS EQUIVALENT TO THE BAR DIAMETER IN MILLIMETERS.

ENGLISH SIZE	3	4	5	6	7	8	9	10	11
BAR DESIGNATION	10	13	16	19	22	25	29	32	36

ALL REINFORCING BARS AND BARS NOTED AS DOWELS SUPPLIED FOR THIS STRUCTURE SHALL BE DEFORMED REINFORCEMENT UNLESS OTHERWISE NOTED OR SHOWN.

SPECIFICATIONS:

DESIGN: AASHTO LRFD 8th Ed, SERIES OF 2017, EXCEPT AS NOTED IN THE CURRENT IOWA BRIDGE DESIGN MANUAL.
CONSTRUCTION: IOWA DEPARTMENT OF TRANSPORTATION STANDARD SPECIFICATIONS FOR HIGHWAY AND BRIDGE CONSTRUCTION, SERIES 2015, PLUS APPLICABLE GENERAL SUPPLEMENTAL SPECIFICATIONS, DEVELOPMENTAL SPECIFICATIONS, SUPPLEMENTAL SPECIFICATIONS AND SPECIAL PROVISIONS SHALL APPLY TO CONSTRUCTION WORK ON THIS PROJECT.
SPECIAL PROVISION - TEMPORARY DETOUR BRIDGE

MASS CONCRETE IS NOT REQUIRED AT PIER CAPS.

DESIGN STRESSES:

DESIGN STRESSES FOR THE FOLLOWING MATERIALS ARE IN ACCORDANCE WITH THE AASHTO LRFD BRIDGE DESIGN SPECIFICATIONS, 8th Ed, SERIES OF 2017, EXCEPT AS NOTED IN THE CURRENT IOWA BRIDGE DESIGN MANUAL.

REINFORCING STEEL IN ACCORDANCE WITH AASHTO LRFD SECTION 5, GRADE 60 FOR EPOXY COATED AND NON-COATED, AND GRADE 60 OR 75 FOR STAINLESS.

CONCRETE IN ACCORDANCE WITH AASHTO LRFD SECTION 5, f'c = 4.0 KSI, EXCEPT PRESTRESSED BEAM CONCRETE AS NOTED.

PRESTRESSED CONCRETE BEAMS, SEE DESIGN SHEET ____

BRIDGE DECK CONCRETE f'c = 4.0 KSI

STRUCTURAL STEEL IN ACCORDANCE WITH AASHTO LRFD SECTION 6. ASTM A709 GRADE 36, GRADE 50, AND GRADE 50W (AASHTO M270 GRADE 36, GRADE 50, AND GRADE 50W).

FATIGUE DESIGN BASED ON FATIGUE I LOAD COMBINATION AND INFINITE LIFE (OR FATIGUE DESIGN BASED ON FATIGUE II LOAD COMBINATION AND 75 YEAR FINITE LIFE WITH SINGLE LANE ADTT ($ADTT_{SL}$) OF ?.

DURING CONSTRUCTION OF THIS PROJECT THE BRIDGE CONTRACTOR WILL BE REQUIRED TO COORDINATE OPERATIONS WITH THOSE OF OTHER CONTRACTORS WORKING WITHIN THE SAME AREA. OTHER WORK IN PROGRESS DURING THE SAME PERIOD OF TIME WILL INCLUDE, BUT IS NOT LIMITED TO, CONSTRUCTION OF THE FOLLOWING PROJECTS:

--- ---
--- ---
--- ---
--- ---
--- ---

IN PROGRESS PLANS
6/10/2019

SHOP DRAWING SUBMITTALS

SHOP DRAWINGS SHALL BE SUBMITTED FOR THE FOLLOWING ITEMS SHOWN IN THE TABLE BELOW. (NOTE ADDITIONAL SHOP DRAWINGS MAY BE REQUIRED IN ACCORDANCE WITH ARTICLE 1105.03 OF THE STANDARD SPECIFICATIONS.)

SUBMITTAL REQUIREMENTS FOR SHOP DRAWINGS SHOULD BE IN ACCORDANCE WITH ARTICLE 1105.03, OF THE STANDARD SPECIFICATIONS, FOR HIGHWAY AND BRIDGE CONSTRUCTION OF THE IOWA DEPARTMENT OF TRANSPORTATION.

1	STRUCTURAL STEEL - DIAPHRAGMS
2	FINGER JOINT DETAILS
3	DECK DRAINAGE SYSTEM
4	TEMPORARY BRIDGE SUPERSTRUCTURE
?	?

BRIDGE DECK DIMENSIONS TABLE

NO.	ITEM	UNIT	QUANTITY
1	DECK LENGTH	L.F.	1103.0
2	MINIMUM DECK WIDTH	L.F.	40.0
3	MAXIMUM DECK WIDTH	L.F.	40.0
4	DECK AREA	S.F.	44120

1. DECK LENGTH IS MEASURED FROM FACE-TO-FACE OF PAVING NOTCHES ALONG THE CENTERLINE OF THE ROADWAY.
2, 3. DECK WIDTHS ARE MEASURED FROM OUT-TO-OUT OF DECK PERPENDICULAR TO THE CENTERLINE OF ROADWAY.
4. DECK AREA IS TO BE BASED ON THE FACE-TO-FACE PAVING NOTCH DISTANCE AND OUT-TO-OUT DECK DIMENSIONS.

NOTE:
ROADWAY QUANTITIES SHOWN ELSEWHERE IN THESE PLANS.

TRAFFIC CONTROL PLAN

NOTE: THE ROADWAY WILL BE OPEN TO THRU TRAFFIC. TRAFFIC CONTROL WILL BE THE RESPONSIBILITY OF THE ROAD CONTRACTOR AS SHOWN ON THE ROAD PLANS.

DESIGN FOR 0° SKEW

1097'-0 X 40'-0 PRETENSIONED PRESTRESSED CONCRETE BEAM E.B. BRIDGE

156'-0 END SPANS 157'-0 INTERIOR SPAN

GENERAL NOTES

IA 2 STA. 400+85.00, RT. 32.00' JUNE 2019

FREMONT COUNTY

IOWA DEPARTMENT OF TRANSPORTATION - HIGHWAY DIVISION

DESIGN SHEET NO. 3 OF ? FILE NO. 31719 DESIGN NO. 119

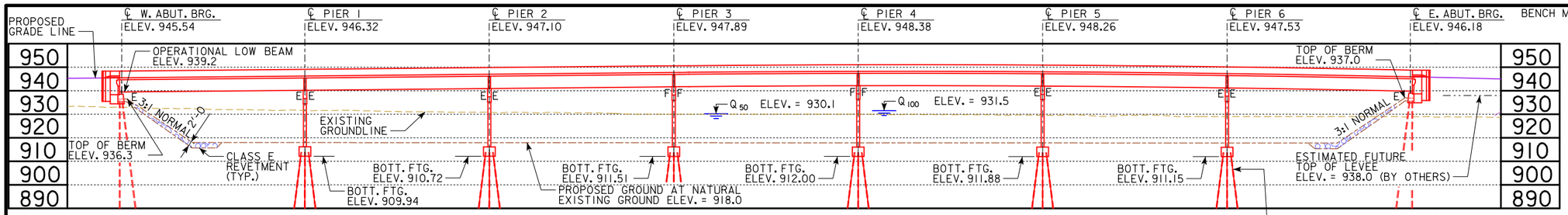

LONGITUDINAL SECTION ALONG ℄ E.B. BRIDGE

(VERTICAL SCALE 2:1)

-3.200% +0.500% -2.000%

VPI STA. = 389+75
VPI ELEV. = 942.70
VC = 500'

VPI STA. = 404+75
VPI ELEV. = 950.20
VC = 1,000'

PROPOSED PROFILE GRADE IA 2

TRAFFIC ESTIMATE

2016 AADT 8,200 V.P.D.

HYDRAULIC DESIGN

LICENSED PROFESSIONAL ENGINEER Mark D. Werner 15418 IOWA

I hereby certify that this engineering document was prepared by me or under my direct personal supervision and that I am a duly licensed Professional Engineer under the laws of the State of Iowa.

Signature Date

MARK D. WERNER

Printed or Typed Name

My license renewal date is December 31, 2019

Pages or sheets covered by this seal:

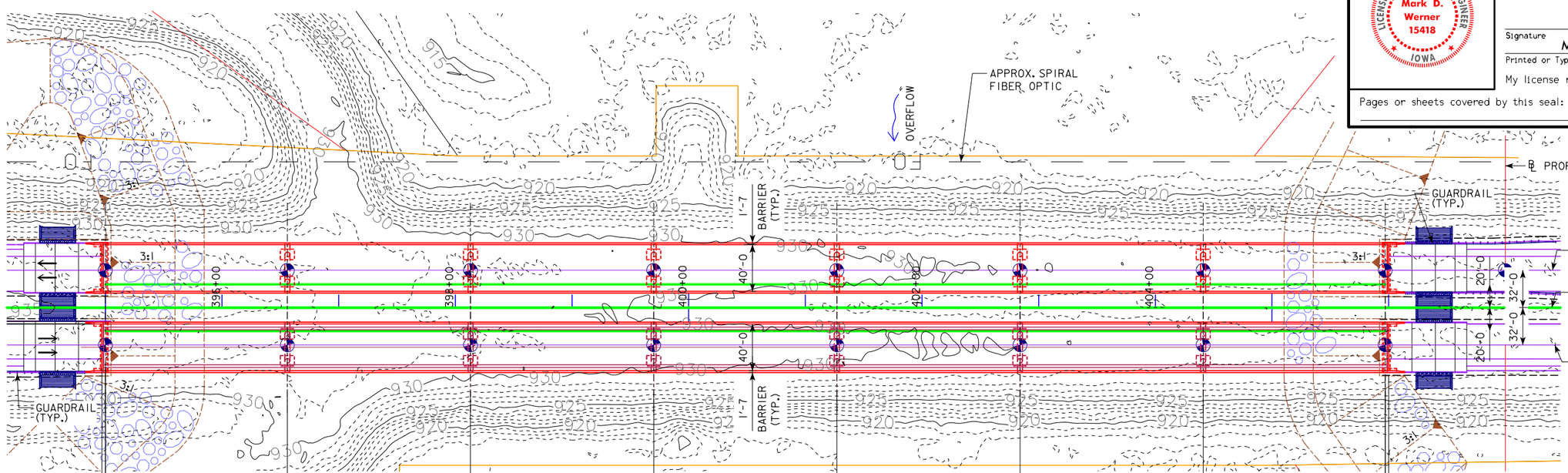

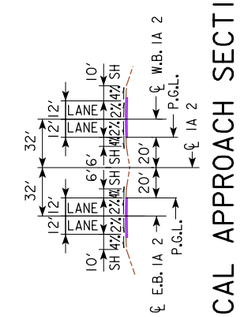

TYPICAL APPROACH SECTION

W. ABUT. BRG.	PIER 1	PIER 2	PIER 3	PIER 4	PIER 5	PIER 6	E. ABUT. BRG.
STA. 395+00.00	STA. 396+56.00	STA. 398+13.00	STA. 399+70.00	STA. 401+27.00	STA. 402+84.00	STA. 404+41.00	STA. 405+97.00
RT. 32.00'	RT. 32.00'	RT. 32.00'	RT. 32.00'	RT. 32.00'	RT. 32.00'	RT. 32.00'	RT. 32.00'

SPAN 1	SPAN 2	SPAN 3	SPAN 4	SPAN 5	SPAN 6	SPAN 7
156'-0	157'-0	157'-0	157'-0	157'-0	157'-0	156'-0

1097'-0 ℄ TO ℄ ABUTMENT BEARINGS

1103'-0 FACE TO FACE PAVING NOTCHES

SITUATION PLAN

0 ENGLISH 100
SCALE IN FEET

NOTES:

APPROXIMATE BORING LOCATION

1. ALL UNITS ARE IN FEET UNLESS OTHERWISE NOTED.
2. TL-4 BRIDGE RAILING PROPOSED.
3. TOP OF BRIDGE DECK AT ℄ E.B. IA 2 IS 0.21' ABOVE THE PROFILE GRADE TO ACCOUNT FOR DECK CROSS SLOPE AND PARABOLIC CROWN.
4. PIER TYPE - 2 COLUMN FRAME PIER OPTION SHOWN, PILE BENT OPTION SIMILAR..
5. BEAM TYPE - BTE BEAMS.
6. BOTH PIER TYPE OPTIONS SUPPORTED BY DRIVEN H-PILES.
7. CLASS E REVETMENT STONE IS EMBEDDED.

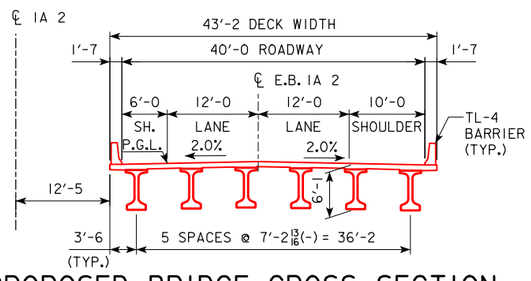

PROPOSED BRIDGE CROSS SECTION

LOCATION

E.B. IA 2 OVERFLOW
T-68N R-43W
SECTION 30/31
BENTON TOWNSHIP
FREMONT COUNTY
FHWA NO. 701075
BRIDGE MAINT. NO. 3600.5R002
LATITUDE 40.676833°
LONGITUDE -95.824989°

UTILITIES LEGEND:

— FO — SPIRAL FIBER OPTIC

PERMITTING NOTES:

1. AS THIS PROJECT REQUIRES A SOVEREIGN LANDS PERMIT, BID ITEM REFERENCE NOTES SHALL RESTRICT BROKEN CONCRETE AS A SUBSTITUTE FOR REVETMENT.
2. AN IOWA DNR FLOOD PLAIN CONSTRUCTION PERMIT IS REQUIRED.
3. AN IOWA SOVEREIGN LANDS PERMIT IS REQUIRED.

HYDRAULIC DATA

DRAINAGE AREA = 410,000 SQ. MI.
STREAM SLOPE = 0.9 FT./MI.
AVG. LOW WATER STAGE = 914.2

Q_{25} = 189,900 CFS
STAGE = 929.3

Q_{50} = 206,400 CFS
STAGE = 930.1
REGULATORY LOW BEAM = N/A
BACKWATER = -0.9 FT.

Q_{100} = 236,700 CFS
STAGE = 931.5
OPERATIONAL LOW BEAM = 939.2
BACKWATER = -1.1 FT.
AVG. BRIDGE VELOCITY = 3.9 FPS

Q_{200} = 275,900 CFS
STAGE = LEVEE OVERTOPS*
CALCULATED DESIGN SCOUR = ???.?

Q_{500} = 345,400 CFS
STAGE = LEVEE OVERTOPS*
CALCULATED CHECK SCOUR = ???.?

* LEVEE OVERTOPS LESS THAN Q_{200} PER USACE STUDY. ASSUME STAGE 1' ABOVE TOP OF LEVEE.

DISCHARGES FROM USACE, UPPER MISSISSIPPI RIVER SYSTEM FLOW FREQUENCY STUDY, DATED NOVEMBER 2003.

VERTICAL DATUM = NAVD 88

PROGRESS PLANS
6/10/2019

DESIGN FOR 0° SKEW

1097'-0 X 40'-0 PRETENSIONED PRESTRESSED CONCRETE BEAM E.B. BRIDGE

156'-0 END SPANS 157'-0 INTERIOR SPAN

SITUATION PLAN

IA 2 STA. 400+85.00, RT. 32.00' JUNE 2019

FREMONT COUNTY

IOWA DEPARTMENT OF TRANSPORTATION - HIGHWAY DIVISION

DESIGN SHEET NO. 4 OF 7 FILE NO. 31719 DESIGN NO. 119

DESIGN TEAM Stanley Consultants Inc. FREMONT COUNTY PROJECT NUMBER NHSX-002-1(123)--3H-36 SHEET NUMBER 5

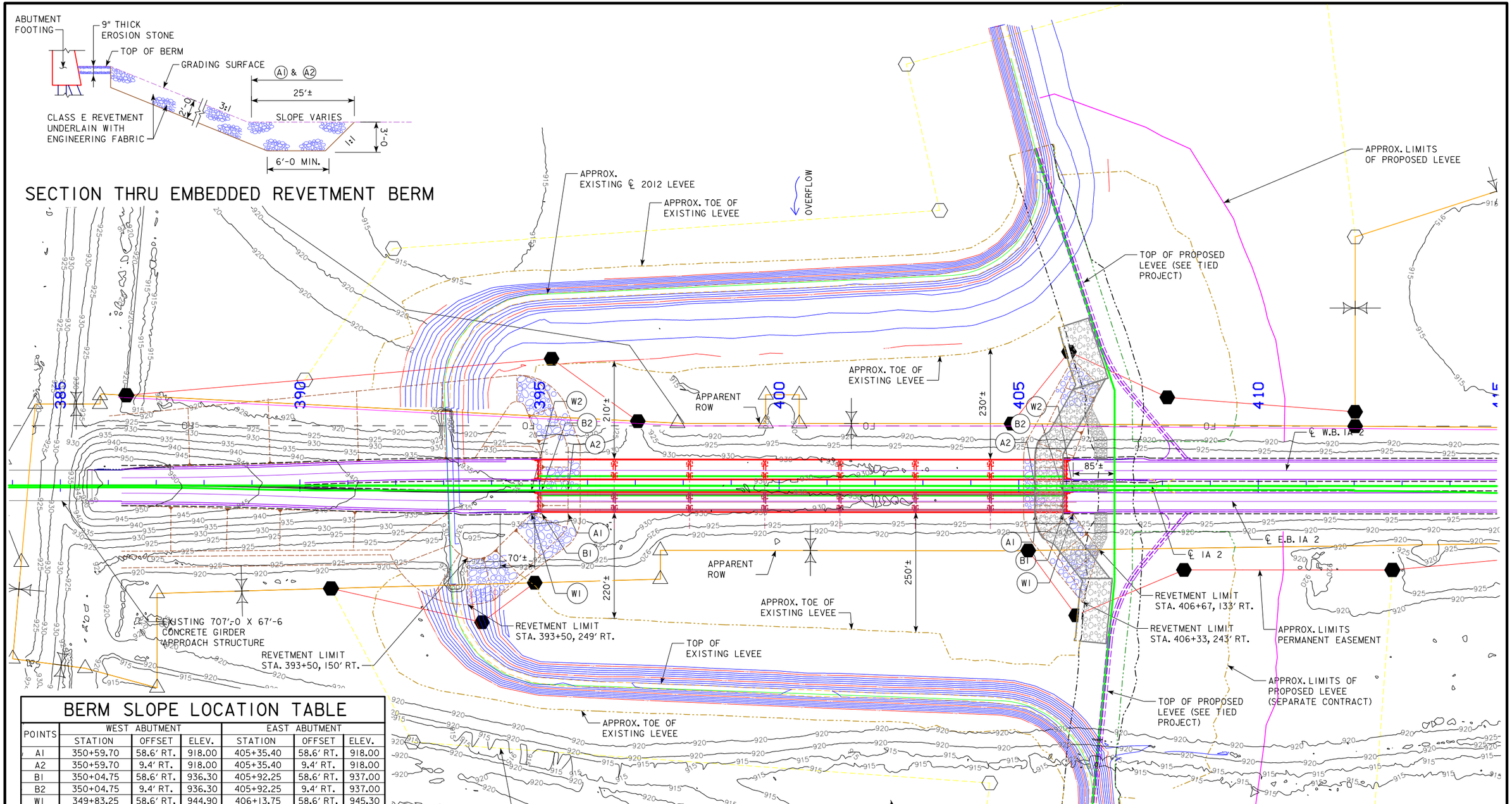

BERM SLOPE LOCATION TABLE

POINTS	WEST ABUTMENT			EAST ABUTMENT		
	STATION	OFFSET	ELEV.	STATION	OFFSET	ELEV.
A1	350+59.70	58.6' RT.	918.00	405+35.40	58.6' RT.	918.00
A2	350+59.70	9.4' RT.	918.00	405+35.40	9.4' RT.	918.00
B1	350+04.75	58.6' RT.	936.30	405+92.25	58.6' RT.	937.00
B2	350+04.75	9.4' RT.	936.30	405+92.25	9.4' RT.	937.00
W1	349+83.25	58.6' RT.	944.90	406+13.75	58.6' RT.	945.30
W2	349+83.25	9.4' RT.	945.00	406+13.75	9.4' RT.	945.40

BERM SLOPE ELEVATIONS REFLECT THE GRADING SURFACE

ESTIMATED BERM ARMORING QUANTITIES

LOCATION	REVETMENT CL. E (TON)	EROSION STONE (TON)	ENGINEERING FABRIC (SY)	EXCAVATION (CY)
BERM LINING - WEST ABUTMENT	3210	13	3350	3020
BERM LINING - EAST ABUTMENT	2450	13	2560	2300
TOTALS	5660	26	5910	5320

EXCAVATION QUANTITY CALCULATED FROM GRADING SURFACE.

SITE PLAN

N

PROGRESS PLANS
6/10/2019

NOTES:
1. EXISTING 2012 LEVEE SHOWN WAS OBTAINED FROM ADDITIONAL SURVEY FROM MAY 2019.
2. PROPOSED LEVEE CONSTRUCTION SHALL BE PART OF TIED PROJECT.

0 ENGLISH 200
SCALE IN FEET

DESIGN FOR 0° SKEW

1097'-0 X 40'-0 PRETENSIONED PRESTRESSED CONCRETE BEAM E.B. BRIDGE

156'-0 END SPANS 157'-0 INTERIOR SPAN

SITUATION PLAN - SITE

IA 2 STA. 400+85.00, RT. 32.00' JUNE 2019

FREMONT COUNTY

IOWA DEPARTMENT OF TRANSPORTATION - HIGHWAY DIVISION

DESIGN SHEET NO. 5 OF 7 FILE NO. 31719 DESIGN NO. 119

DESIGN TEAM Stanley Consultants Inc. FREMONT COUNTY PROJECT NUMBER NHSX-002-1(123)--3H-36 SHEET NUMBER 6

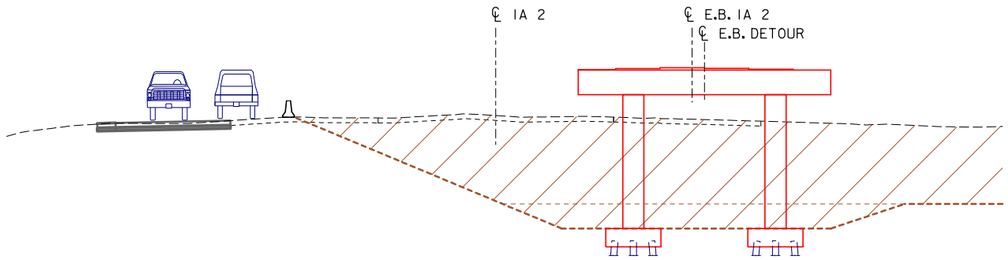

STAGE 2 - CONSTRUCT E.B. SUBSTRUCTURE

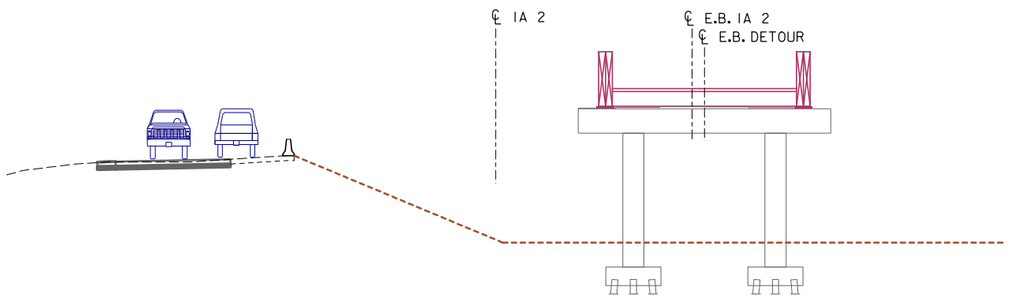

STAGE 2 - INSTALL TEMPORARY BRIDGE SUPERSTRUCTURE

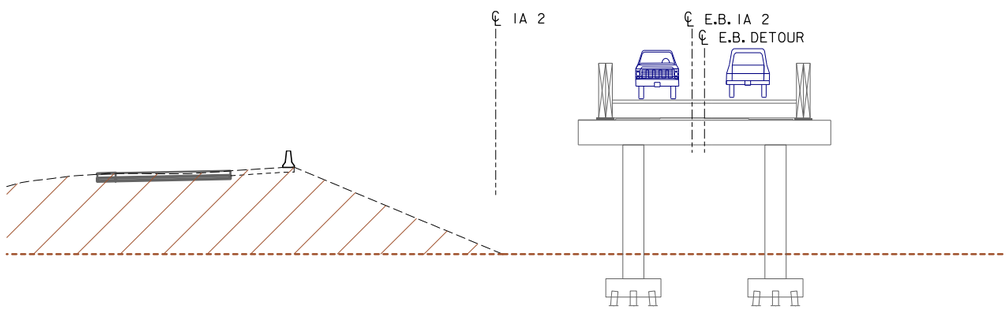

STAGE 3A - SHIFT TRAFFIC

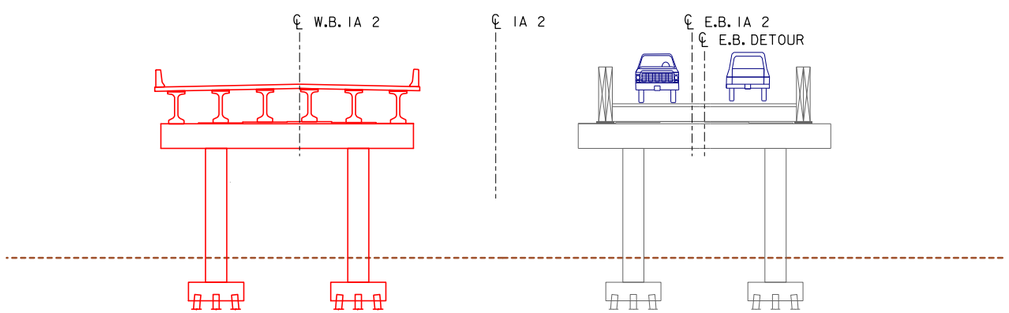

STAGE 3B - CONSTRUCT W.B. BRIDGE

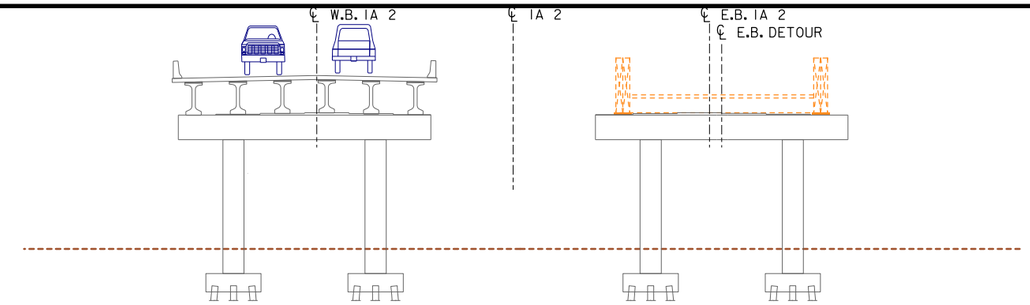

STAGE 4A - REMOVE TEMPORARY BRIDGE SUPERSTRUCTURE

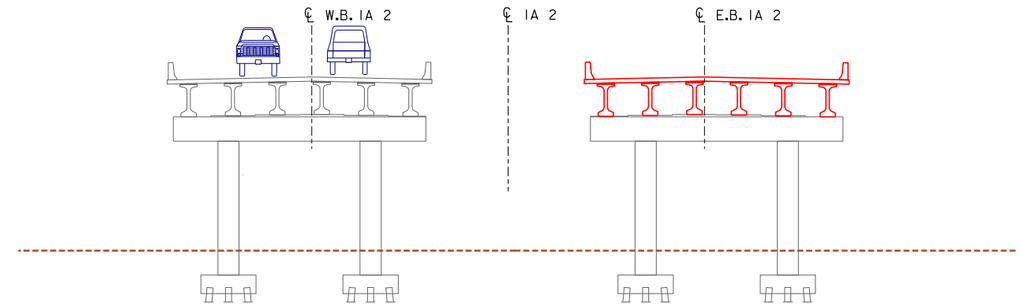

STAGE 4B - CONSTRUCT E.B. SUPERSTRUCTURE

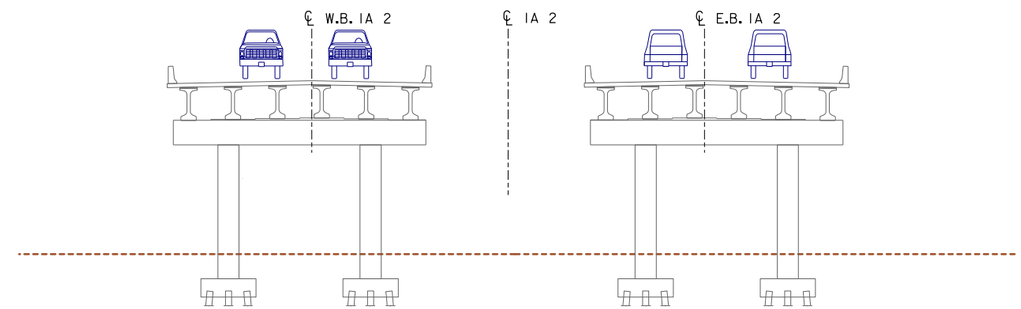

COMPLETED PROJECT

FRAME PIER OPTION STAGING NOTES:

STAGE 1
1. NO BRIDGE WORK DURING STAGE 1.
2. HEAD-TO-HEAD TRAFFIC ON EXISTING E.B. IA 2 ROADWAY.

STAGE 2
1. HEAD-TO-HEAD TRAFFIC SHIFTED TO W.B. ROADWAY.
2. EXCAVATE ONLY AS NECESSARY TO BUILD E.B. PERMANENT SUBSTRUCTURE.
3. CONSTRUCT E.B. PERMANENT SUBSTRUCTURE.
4. INSTALL TEMPORARY BRIDGE SUPERSTRUCTURE ON PERMANENT E.B. SUBSTRUCTURE.

STAGE 3
1. HEAD-TO-HEAD TRAFFIC SHIFTED TO E.B. TEMPORARY DETOUR/BRIDGE.
2. CONSTRUCT LEVEE AND EXCAVATE DOWN TO ELEV. 316'± TO OPEN OVERFLOW CHANNEL (OVERFLOW TO BE OPEN BY MARCH 1, 2020).
3. CONSTRUCT ENTIRE W.B. BRIDGE.

STAGE 4
1. HEAD-TO-HEAD TRAFFIC SHIFTED TO W.B. PERMANENT BRIDGE.
2. REMOVE TEMPORARY DETOUR BRIDGE.
3. CONSTRUCT PERMANENT E.B. SUPERSTRUCTURE.

COMPLETED PROJECT
1. TRAFFIC SHIFTED TO BOTH PERMAMENT BRIDGES.

PROJECT PLANS
6/10/2019

DESIGN FOR 0° SKEW

1097'-0 X 40'-0 PRETENSIONED PRESTRESSED CONCRETE BEAM E.B. BRIDGE

156'-0 END SPANS — 157'-0 INTERIOR SPAN

STAGING DETAILS - FRAME PIER OPTION

IA 2 STA. 400+85.00, RT. 32.00' — JUNE 2019

FREMONT COUNTY

IOWA DEPARTMENT OF TRANSPORTATION - HIGHWAY DIVISION

DESIGN SHEET NO. 6 OF 7 FILE NO. 31719 DESIGN NO. 119

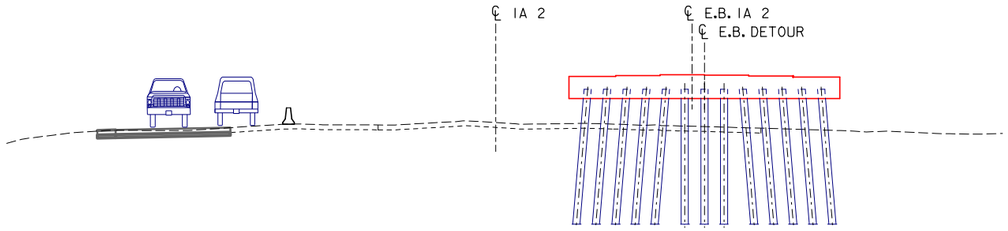

STAGE 2A - CONSTRUCT E.B. SUBSTRUCTURE

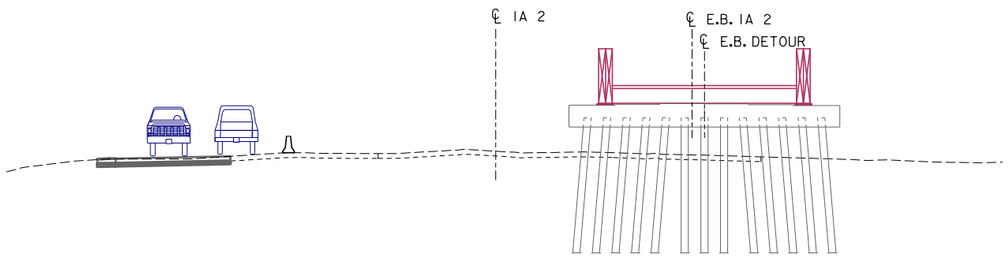

STAGE 2B - INSTALL TEMPORARY BRIDGE SUPERSTRUCTURE

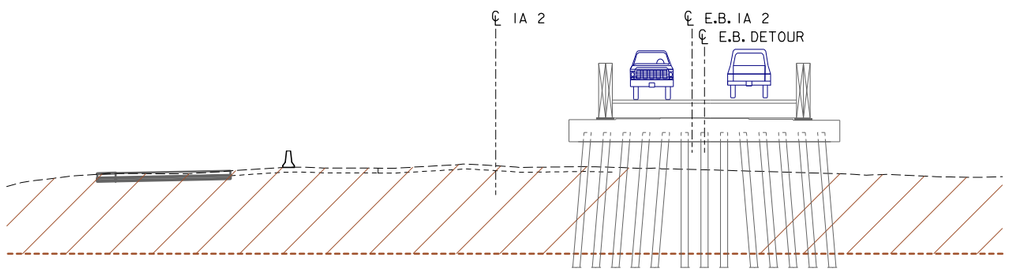

STAGE 3A - EXCAVATE W.B. ROADWAY

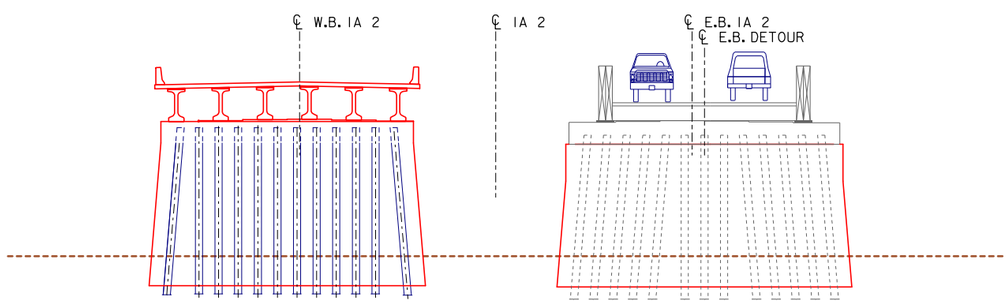

STAGE 3B - CONSTRUCT W.B. BRIDGE, ENCASE E.B. SUBSTRCUTURE

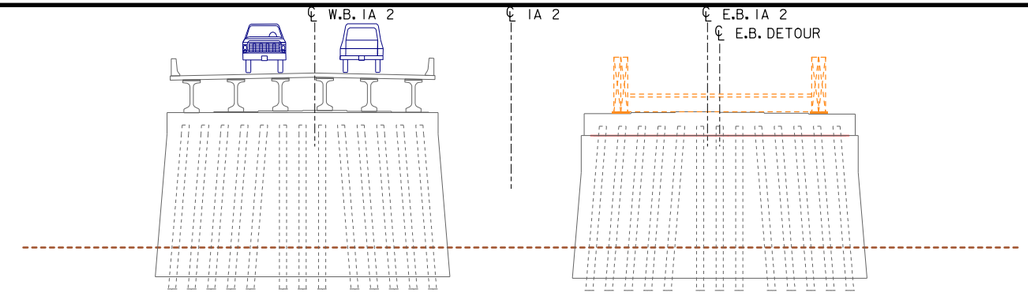

STAGE 4A - REMOVE TEMPORARY BRIDGE SUPERSTRUCTURE

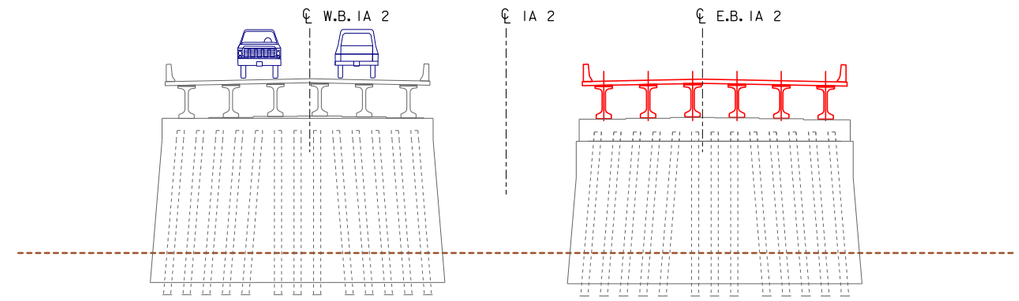

STAGE 4B - CONSTRUCT E.B. SUPERSTRUCTURE

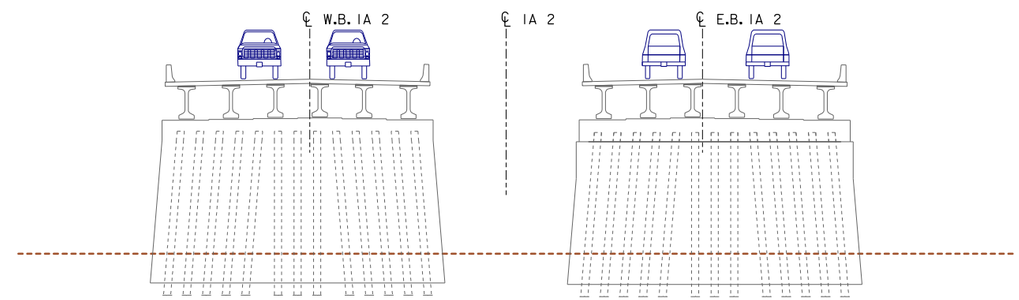

COMPLETED PROJECT

PILE BENT OPTION STAGING NOTES:

STAGE 1
1. NO BRIDGE WORK DURING STAGE 1.
2. HEAD-TO-HEAD TRAFFIC ON EXISTING E.B. IA 2 ROADWAY.

STAGE 2
1. HEAD-TO-HEAD TRAFFIC SHIFTED TO W.B. IA 2 DETOUR ROADWAY.
2. CONSTRUCT E.B. SUBSTRUCTURE
3. INSTALL TEMPORARY BRIDGE SUPERSTRUCTURE ON PERMANENT E.B. SUBSTRUCTURE.

STAGE 3
1. HEAD-TO-HEAD TRAFFIC SHIFTED TO E.B. IA 2 DETOUR/TEMPORARY BRIDGE.
2. CONSTRUCT LEVEE AND EXCAVATE DOWN TO ELEV. 918'± TO OPEN OVERFLOW CHANNEL (OVERFLOW TO BE OPEN BY MARCH 1, 2020).
3. CONTRUCT W.B. BRIDGE.
4. ENCASE E.B. EXPOSED PILE BENT.

STAGE 4
1. HEAD-TO-HEAD TRAFFIC SHIFTED TO W.B. BRIDGE.
2. REMOVE TEMPORARY BRIDGE SUPERSTRUCTURE.
3. CONSTRUCT PERMANENT E.B. SUPERSTRUCTURE.

COMPLETED PROJECT
1. TRAFFIC SHIFTED TO BOTH COMPLETED BRIDGES.

PROGRESS PLANS
JUNE 2019

DESIGN FOR 0° SKEW

1097'-0 X 40'-0 PRETENSIONED PRESTRESSED CONCRETE BEAM E.B. BRIDGE

156'-0 END SPANS 157'-0 INTERIOR SPAN

STAGING DETAILS - PILE BENT OPTION

IA 2 STA. 400+85.00, RT. 32.00' JUNE 2019

FREMONT COUNTY

IOWA DEPARTMENT OF TRANSPORTATION - HIGHWAY DIVISION

DESIGN SHEET NO. 7 OF 7 FILE NO. 31719 DESIGN NO. 119

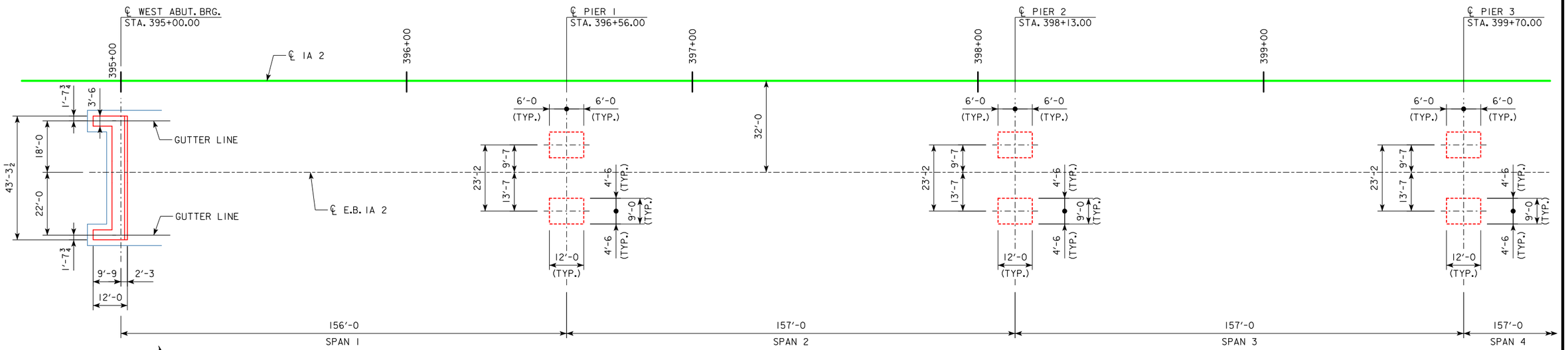

STAKING DIAGRAM - FRAME PIER OPTION

(SPANS 1-4 SHOWN)

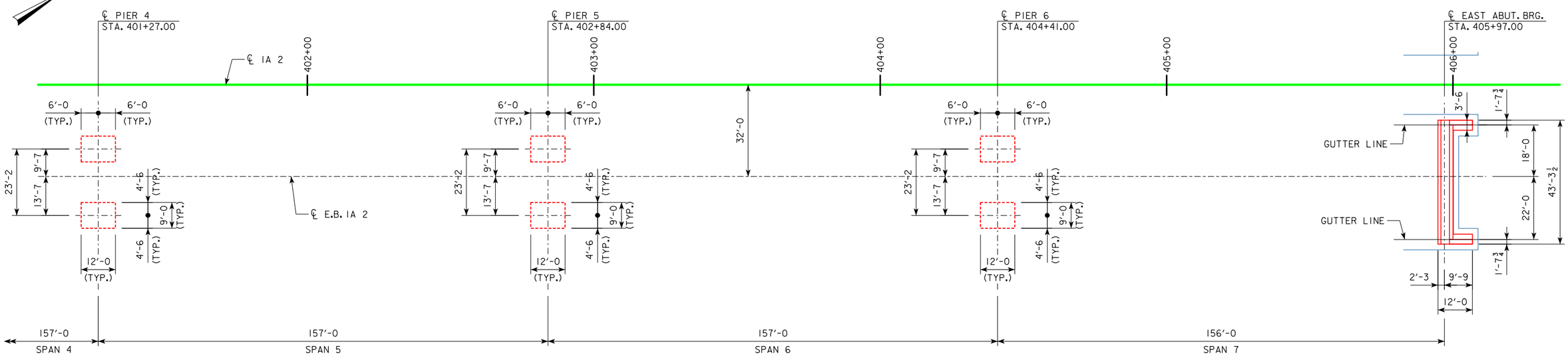

STAKING DIAGRAM - FRAME PIER OPTION

(SPANS 4-7 SHOWN)

PROGRESS PLANS
6/10/2019

DESIGN FOR 0° SKEW

1097'-0 X 40'-0 PRETENSIONED PRESTRESSED CONCRETE BEAM E.B. BRIDGE

156'-0 END SPANS — 157'-0 INTERIOR SPAN

STAKING DIAGRAM - FRAME PIER OPTION

IA 2 STA. 400+85.00, RT. 32.00' — JUNE 2019

FREMONT COUNTY

IOWA DEPARTMENT OF TRANSPORTATION - HIGHWAY DIVISION

DESIGN SHEET NO. 8 OF 7 FILE NO. 31719 DESIGN NO. 119

DESIGN TEAM Stanley Consultants Inc.	FREMONT COUNTY	PROJECT NUMBER NHSX-002-1(123)--3H-36	SHEET NUMBER 9

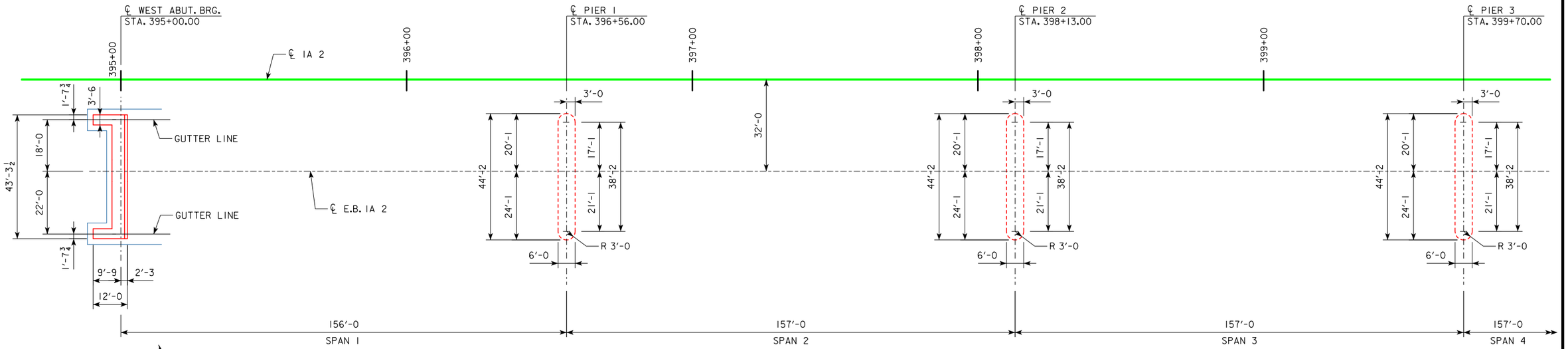

STAKING DIAGRAM - PILE BENT OPTION
(SPANS 1-4 SHOWN)

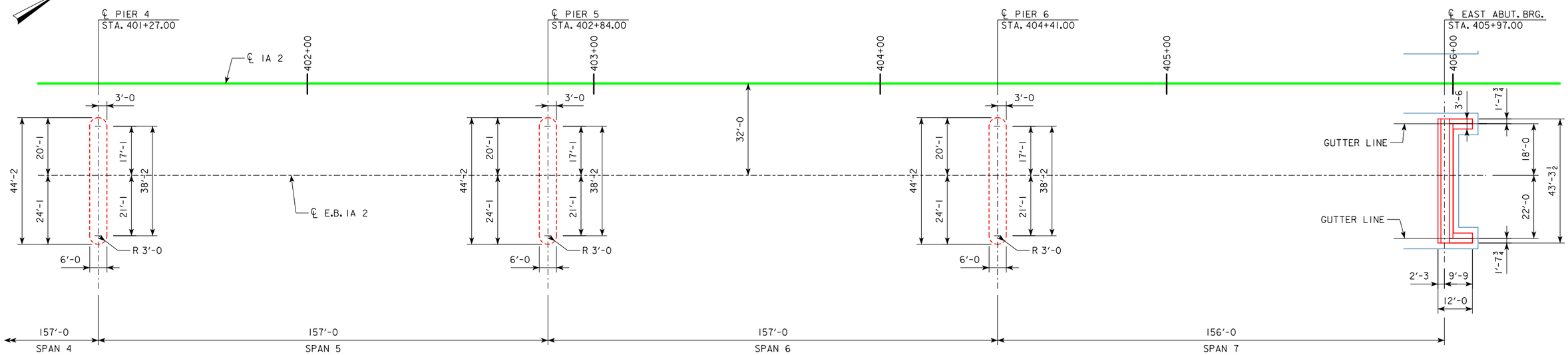

STAKING DIAGRAM - PILE BENT OPTION
(SPANS 4-7 SHOWN)

PROGRESS PLANS
6/10/2019

DESIGN FOR 0° SKEW

1097'-0 X 40'-0 PRETENSIONED
PRESTRESSED CONCRETE BEAM E.B. BRIDGE

156'-0 END SPANS — 157'-0 INTERIOR SPAN

STAKING DIAGRAM - PILE BENT OPTION

IA 2 STA. 400+85.00, RT. 32.00' — JUNE 2019

FREMONT COUNTY

IOWA DEPARTMENT OF TRANSPORTATION - HIGHWAY DIVISION

DESIGN SHEET NO. 9 OF 7 FILE NO. 31719 DESIGN NO. 119

DESIGN TEAM Stanley Consultants Inc.	FREMONT COUNTY	PROJECT NUMBER NHSX-002-1(123)--3H-36	SHEET NUMBER 10

BENCH MARK :

Δ HEIGHT OF TEMPORARY BACKWALL CAN BE MODIFIED AS REQUIRED TO MATCH SUPERSTRUCTURE OF TEMPORARY BRIDGE SUPERSTRUCTURE WITH WRITTEN APPROVAL BY THE ENGINEER. COST TO FURNISH AND INSTALL TEMPORARY BACKWALL CONCRETE AND REINFORCING SHALL BE INCIDENTAL TO PRICE BID FOR "TEMPORARY DETOUR BRIDGE SUPERSTRUCTURE".

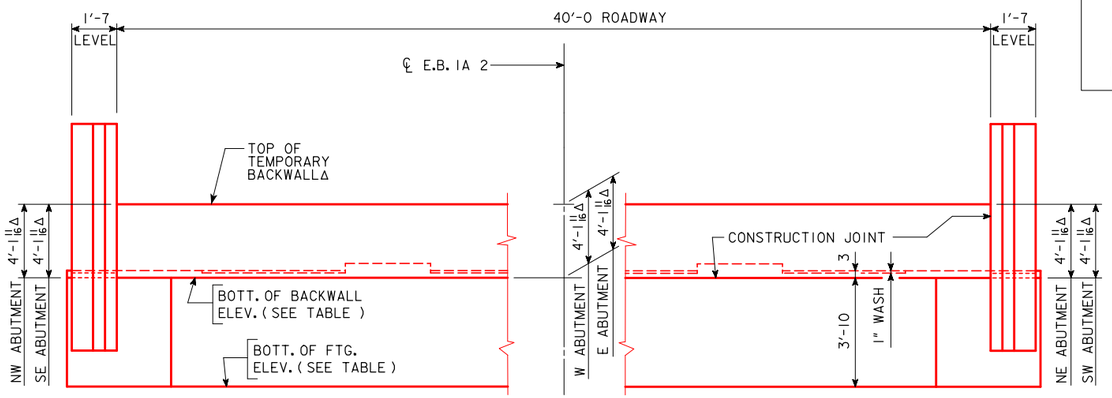

REAR ELEVATION

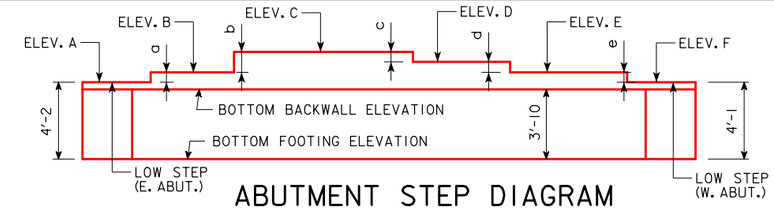

ABUTMENT STEP DIAGRAM

(REAR ELEVATION, WEST ABUTMENT)
(FRONT ELEVATION, EAST ABUTMENT)

TABLE OF ABUTMENT ELEVATIONS

POINT	WEST ABUTMENT	EAST ABUTMENT
ELEV. A	938.43	939.14
ELEV. B	938.58	939.29
ELEV. C	938.71	939.42
ELEV. D	938.64	939.35
ELEV. E	938.50	939.21
ELEV. F	938.35	939.06
BOTT.BACKWALL ELEV.	938.10	938.81
BOTT. FTG. ELEV.	934.27	934.98

TABLE OF ABUTMENT STEPS

STEP	WEST ABUTMENT	EAST ABUTMENT
a	$1\frac{13}{16}$	$1\frac{13}{16}$
b	$1\frac{11}{16}$	$1\frac{11}{16}$
c	$1\frac{15}{16}$	$1\frac{15}{16}$
d	$1\frac{11}{16}$	$1\frac{11}{16}$
e	$1\frac{13}{16}$	$1\frac{13}{16}$

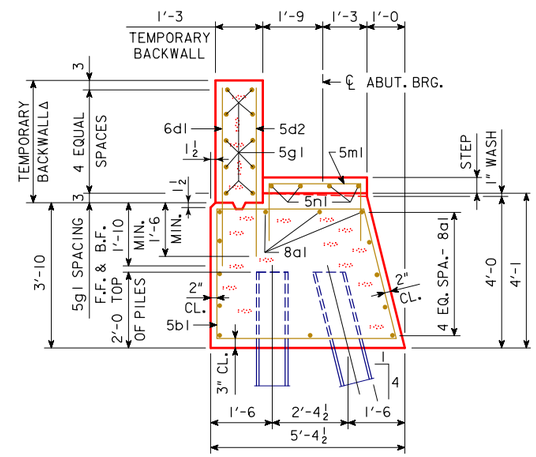

SECTION THROUGH ABUTMENT

EXPANSION DEVICE NOT SHOWN

NOTE :
PLACE 5m1 AND 5n1 BARS
UNDER EACH BEAM.

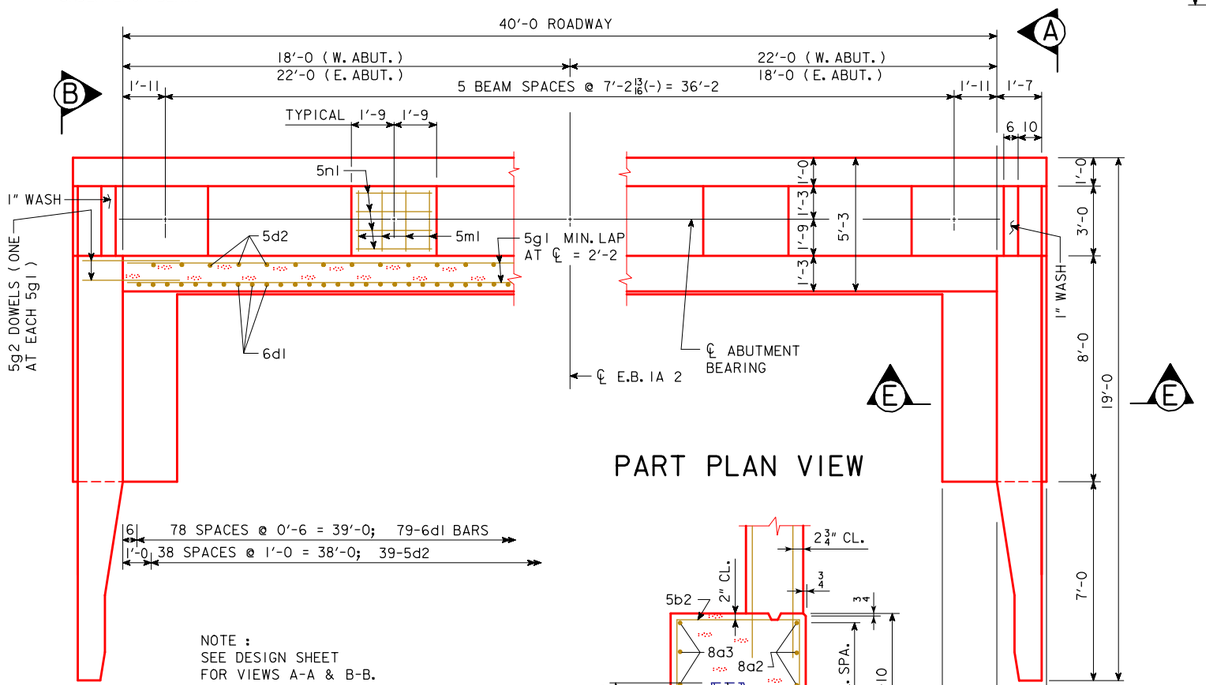

PART PLAN VIEW

NOTE :
SEE DESIGN SHEET
FOR VIEWS A-A & B-B.

PART SECTION THROUGH BACKWALL

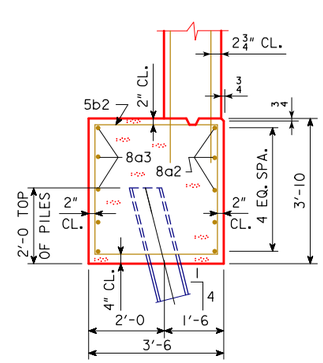

SECTION E-E

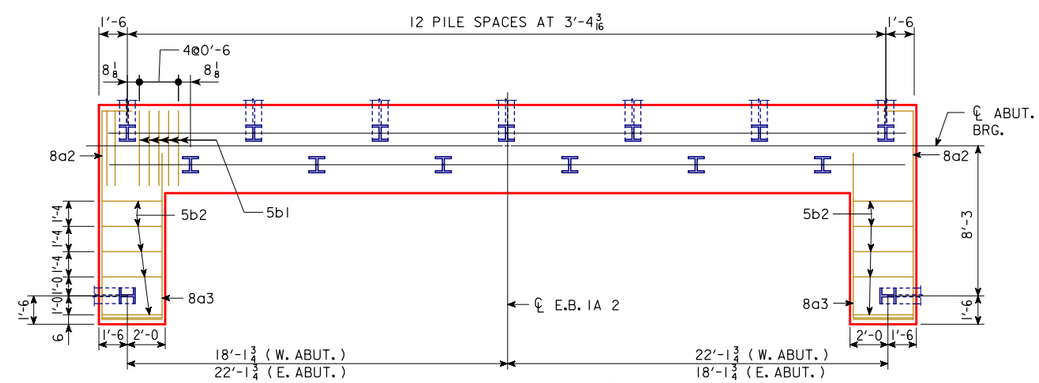

PILING LAYOUT

PROGRESS PLANS
6/10/2019

NOTE :
DIMENSIONS SHOWN ON PILING LAYOUT ARE AT BOTTOM OF FOOTING. BATTER PILES IN THE DIRECTION SHOWN.
15 - HP10x42 STEEL BEARING PILING REQUIRED AT EACH ABUTMENT.

NOTE: BARRIER RAIL NOT SHOWN IN DETAILS.

DESIGN FOR 0° SKEW

1097'-0 X 40'-0 PRETENSIONED PRESTRESSED CONCRETE BEAM E.B. BRIDGE

156'-0 END SPANS — 157'-0 INTERIOR SPAN

ABUTMENT FOOTING DETAILS

IA 2 STA. 400+85.00, RT. 32.00' — JUNE 2019

FREMONT COUNTY

IOWA DEPARTMENT OF TRANSPORTATION - HIGHWAY DIVISION

DESIGN SHEET NO. 10 OF 2 FILE NO. 31719 DESIGN NO. 119

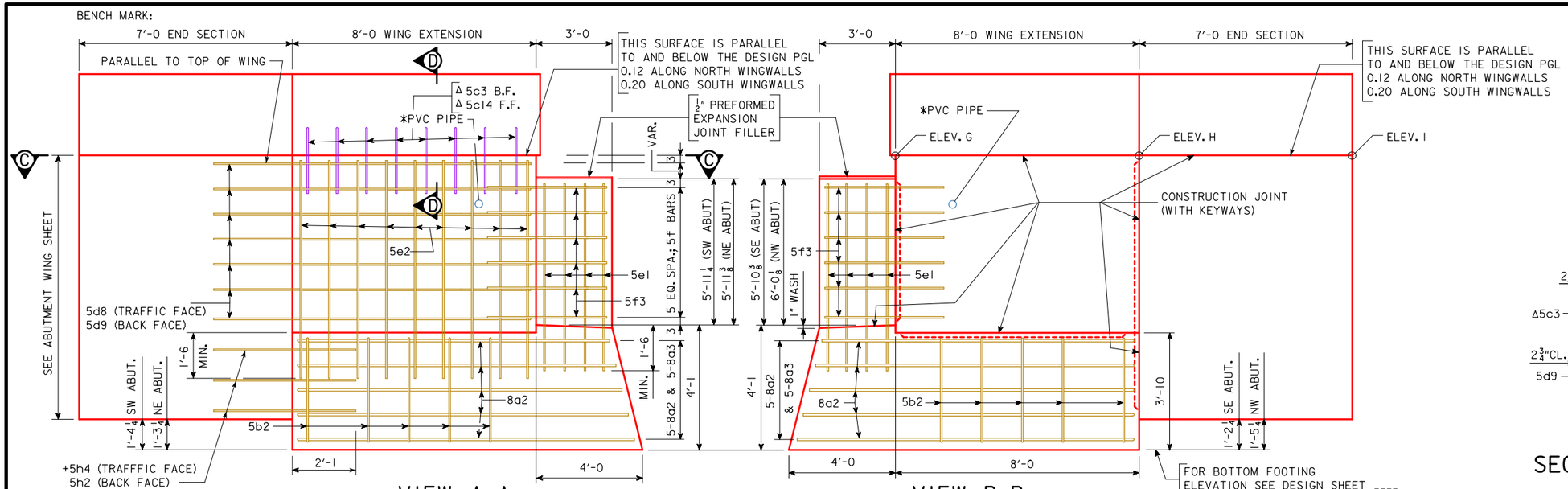

VIEW A-A

NOTE: FOR LOCATION OF VIEWS A-A & B-B SEE DESIGN SHEET ____.

VIEW B-B

* SEE PART PLAN & LONGIT. SECTION SHEET FOR PVC PIPE LOCATION.

+ 5d8 AND 5h4 TO BE PLACED WITHIN NE, SE, AND SW WING EXTENSIONS. SEE DESIGN SHEET 13 FOR NW WING DETAILS.

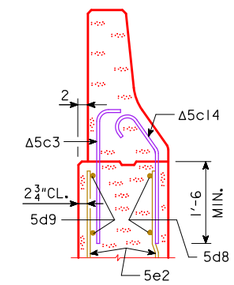

PART SECTION D-D

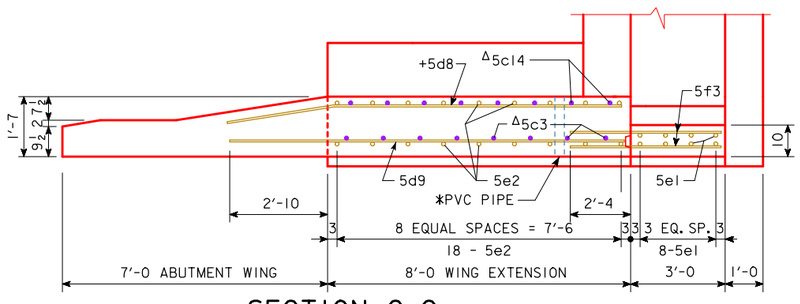

SECTION C-C

NOTE: BARRIER RAIL NOT SHOWN IN SECTION C-C.

Δ NOTE: SEE DESIGN SHEET ____ IN THESE PLANS FOR DETAILS OF BARRIER RAIL WING EXTENSIONS. REINFORCING BARS 5c3 AND 5c14 ARE INCLUDED IN THE BARRIER RAIL QUANTITIES.

TABLE OF WINGWALL ELEVATIONS

LOCATION	ELEV. G	ELEV. H	ELEV. I
NORTHWEST WING	945.20	945.16	945.12
SOUTHWEST WING	945.12	945.08	945.04
NORTHEAST WING	945.84	945.75	945.67
SOUTHEAST WING	945.76	945.67	945.59

PROGRESS PLANS
6/10/2019

DESIGN FOR 0° SKEW

1097'-0 X 40'-0 PRETENSIONED PRESTRESSED CONCRETE BEAM E.B. BRIDGE

156'-0 END SPANS 157'-0 INTERIOR SPAN

ABUTMENT WING EXT. DETAILS

IA 2 STA. 400+85.00, RT. 32.00' JUNE 2019

FREMONT COUNTY

IOWA DEPARTMENT OF TRANSPORTATION - HIGHWAY DIVISION

DESIGN SHEET NO. 11 OF ? FILE NO. 31719 DESIGN NO. 119

DESIGN TEAM Stanley Consultants Inc.	"BTE" BEAM STUB ABUT. DETAILS - 0° SKEW	MODIFIED STANDARD SHEET 2099-BTE	FREMONT COUNTY	PROJECT NUMBER NHSX-002-1(123)--3H-36	SHEET NUMBER 12

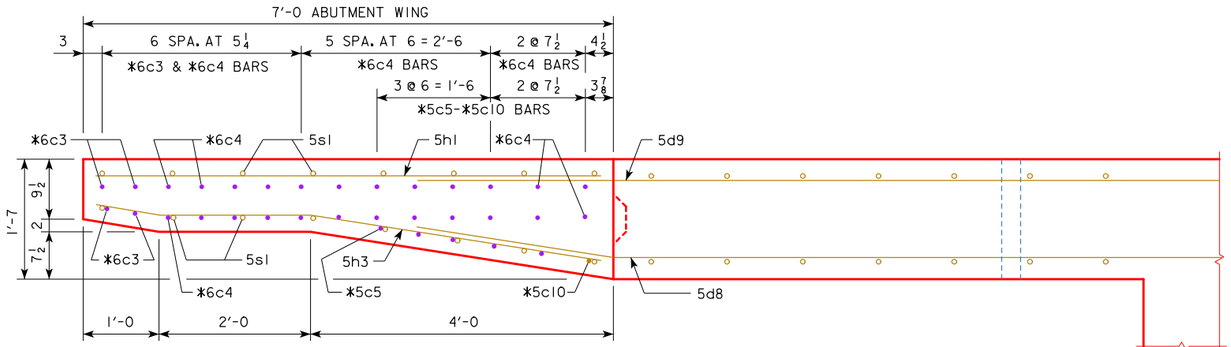

VIEW A-A

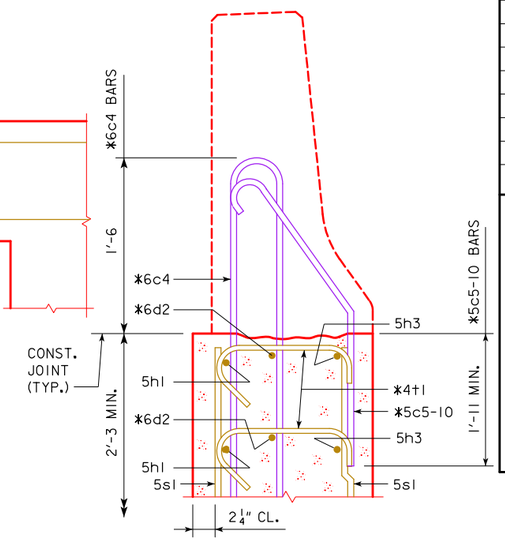

SECTION B-B

* BARRIER RAIL END SECTION BARS TO BE PLACED WITH ABUTMENT WING.

SEE BARRIER RAIL END SECTION SHEET IN THESE PLANS FOR DETAILS OF REINFORCING BARS 6c3, 6c4, 5c5-10, 6d2 & 4t1.

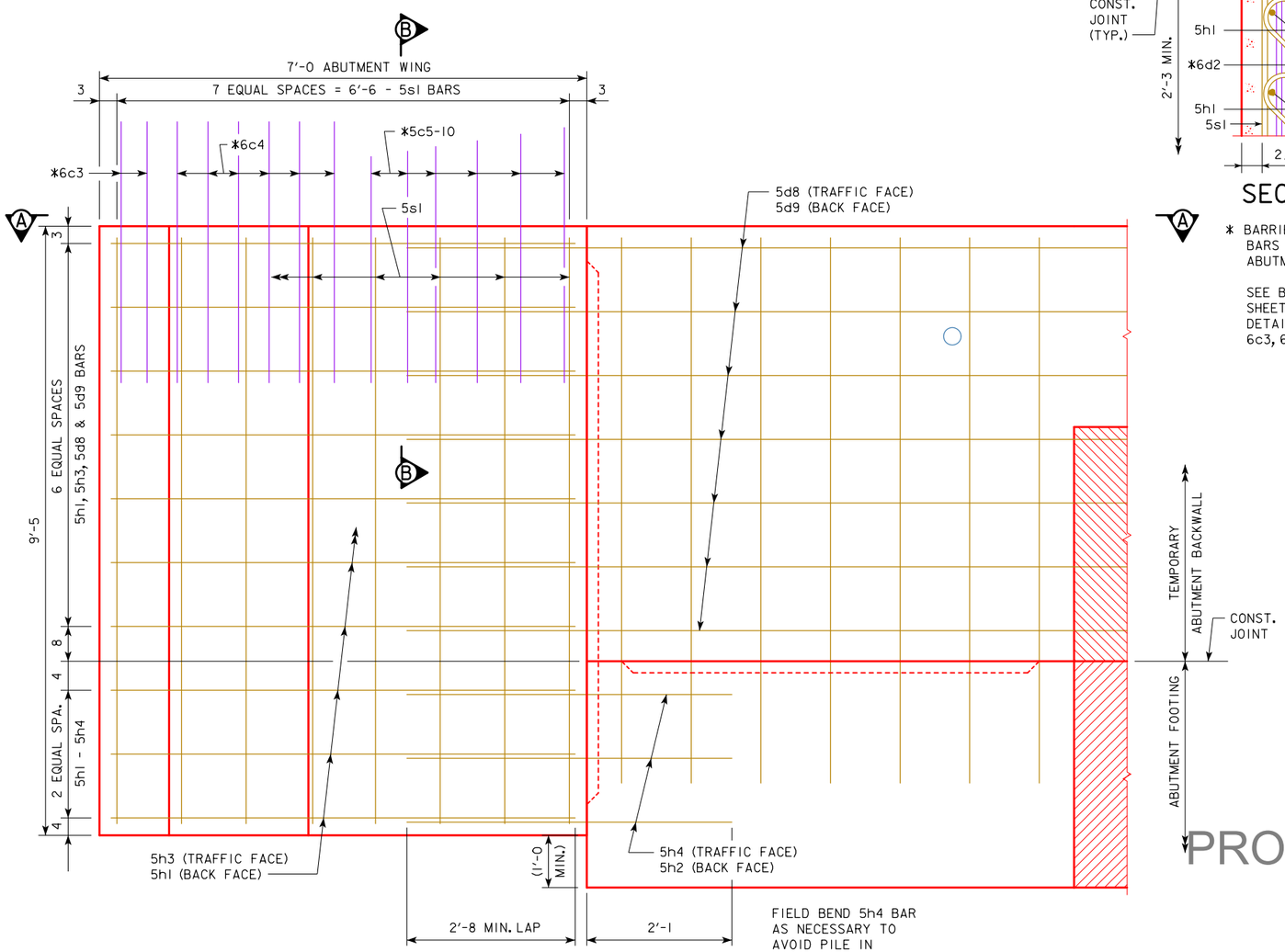

ABUTMENT WING - ELEVATION VIEW

REINFORCING BAR LIST - ONE ABUT. WING

BAR	LOCATION	SHAPE	NO.	LENGTH	WEIGHT
5h1	HORIZONTAL BACK FACE		10	6'-8	70
5h3	HORIZONTAL TRAFFIC FACE		10	6'-9	70
5s1	VERTICAL BOTH FACES		16	9'-1	152
	REINFORCING STEEL EPOXY COATED - TOTAL (LBS.)				292

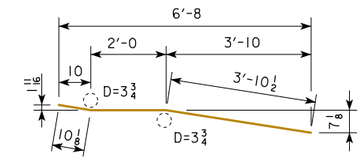

5h3

NOTE: ALL DIMENSIONS ARE OUT TO OUT. D = PIN DIAMETER.

BENT BAR DETAILS

CONCRETE PLACEMENT SUMMARY

CONCRETE	TOTAL
ONE ABUTMENT WING	2.7
TOTAL (CU. YDS.)	2.7

NOTE:

CONCRETE AND REINFORCING STEEL QUANTITIES ARE INCLUDED ON THE SUMMARY QUANTITIES SHEET.

PROGRESS PLANS
6/10/2019

DESIGN FOR 0° SKEW

1097'-0 X 40'-0 PRETENSIONED PRESTRESSED CONCRETE BEAM E.B. BRIDGE

156'-0 END SPANS 157'-0 INTERIOR SPAN

ABUTMENT WING DETAILS

IA 2 STA. 400+85.00, RT. 32.00' JUNE 2019

FREMONT COUNTY

IOWA DEPARTMENT OF TRANSPORTATION - HIGHWAY DIVISION

DESIGN SHEET NO. 12 OF ? FILE NO. 31719 DESIGN NO. 119

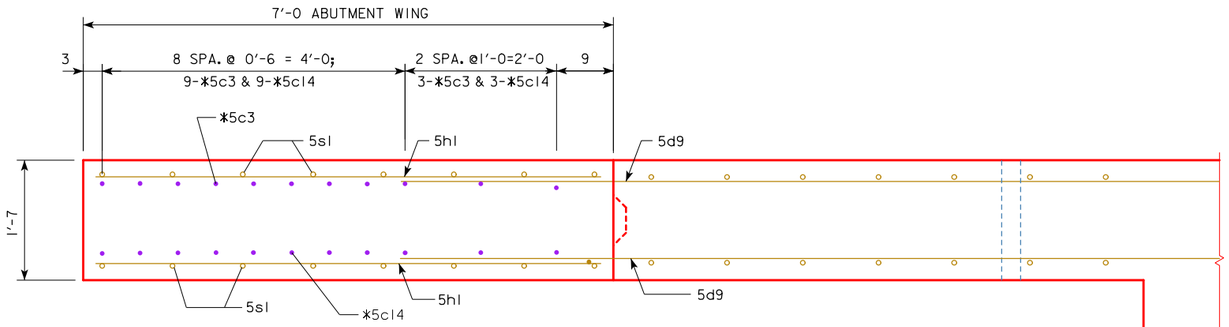

VIEW A-A

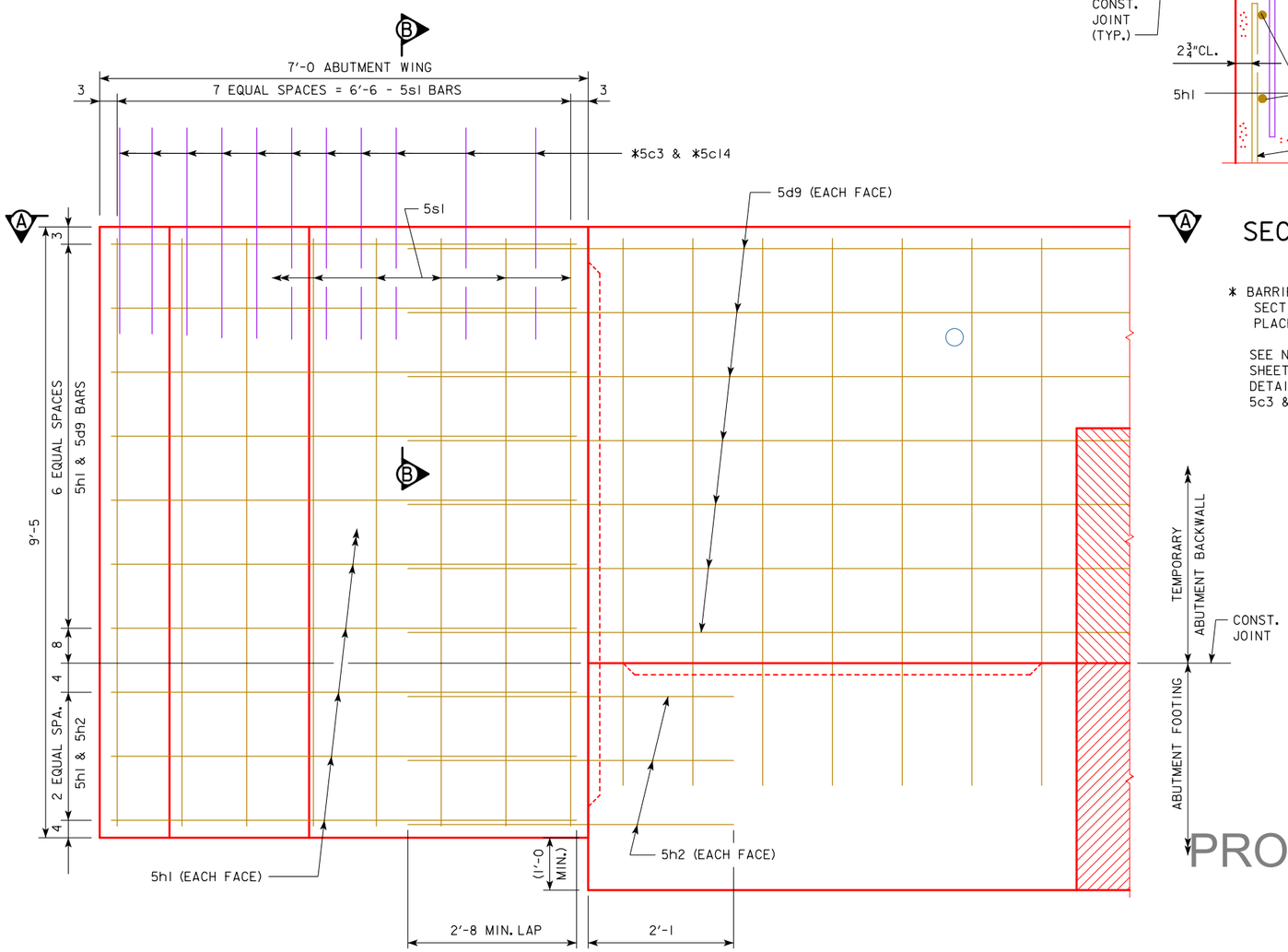

ABUTMENT WING - ELEVATION VIEW

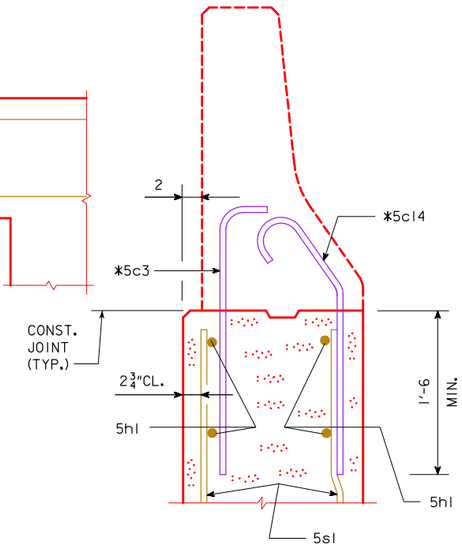

A SECTION B-B

* BARRIER RAIL SPECIAL END SECTION B BARS TO BE PLACED WITH ABUTMENT WING.

SEE NORTH BARRIER RAIL DETAILS SHEET IN THESE PLANS FOR DETAILS OF REINFORCING BARS 5c3 & 5c14.

REINFORCING BAR LIST - N.W. ABUT. WING

BAR	LOCATION	SHAPE	NO.	LENGTH	WEIGHT
5h1	HORIZONTAL BACK FACE	—	20	6'-8	139
5s1	VERTICAL BOTH FACES	—	16	9'-1	152
	REINFORCING STEEL EPOXY COATED - TOTAL (LBS.)				291

CONCRETE PLACEMENT SUMMARY

CONCRETE	TOTAL
ONE ABUTMENT WING	3.9
TOTAL (CU. YDS.)	3.9

NOTE:

CONCRETE AND REINFORCING STEEL QUANTITIES ARE INCLUDED ON THE SUMMARY QUANTITIES SHEET.

PROGRESS PLANS
6/10/2019

DESIGN FOR 0° SKEW

1097'-0 X 40'-0 PRETENSIONED PRESTRESSED CONCRETE BEAM E.B. BRIDGE

156'-0 END SPANS 157'-0 INTERIOR SPAN

N.W. ABUTMENT WING DETAILS

IA 2 STA. 400+85.00, RT. 32.00' JUNE 2019

FREMONT COUNTY

IOWA DEPARTMENT OF TRANSPORTATION - HIGHWAY DIVISION

DESIGN SHEET NO. 13 OF ? FILE NO. 31719 DESIGN NO. 119

BENCH MARK :

Δ HEIGHT OF TEMPORARY BACKWALL MAY HAVE BEEN MODIFIED AS REQUIRED TO MATCH SUPERSTRUCTURE OF TEMPORARY BRIDGE SUPERSTRUCTURE.

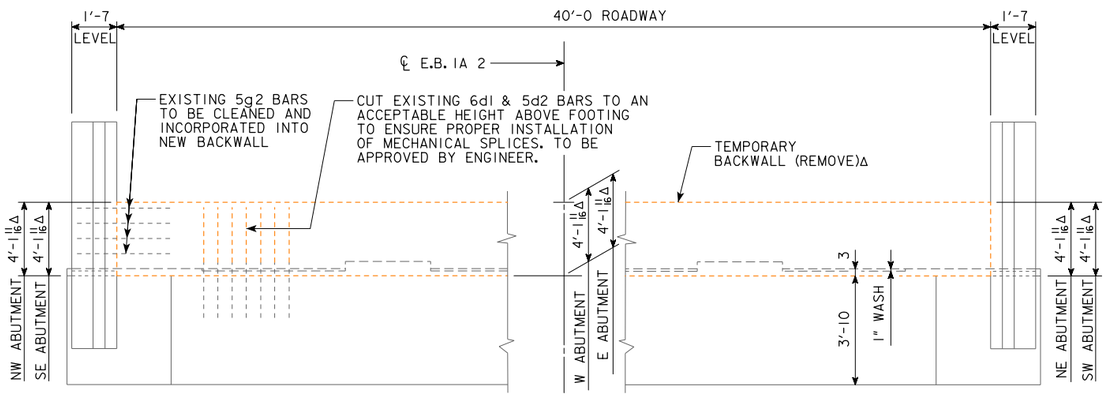

REAR ELEVATION

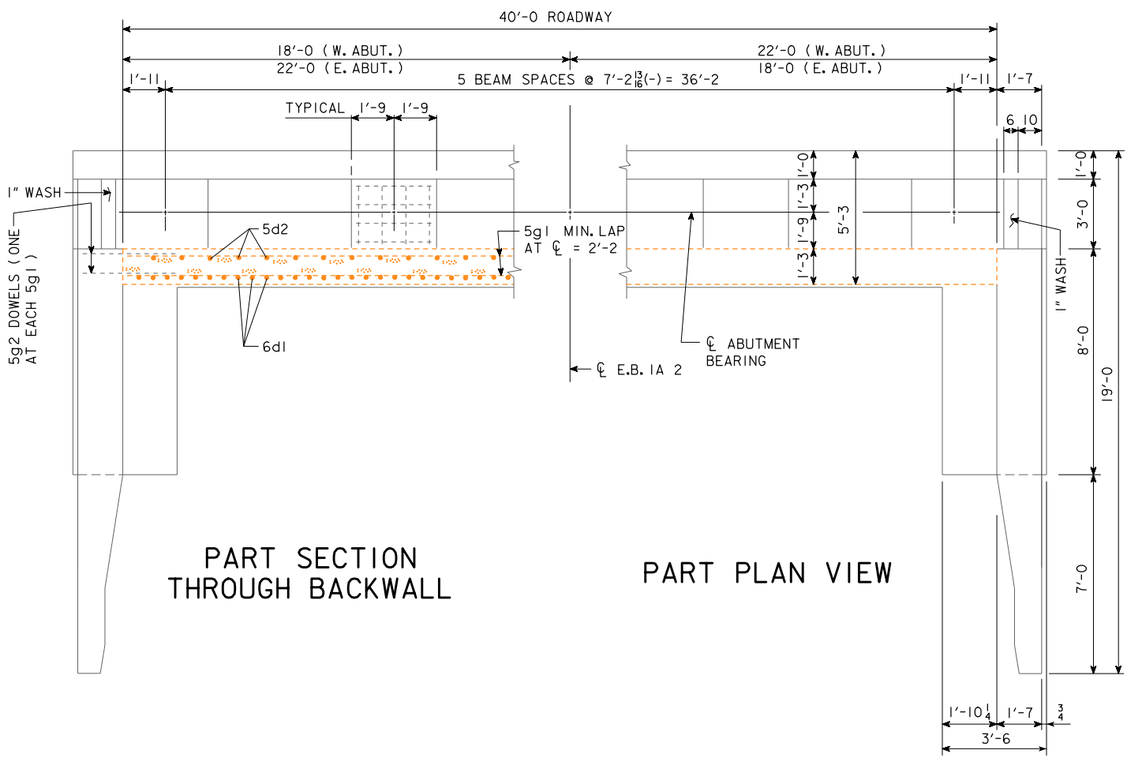

PART SECTION THROUGH BACKWALL

PART PLAN VIEW

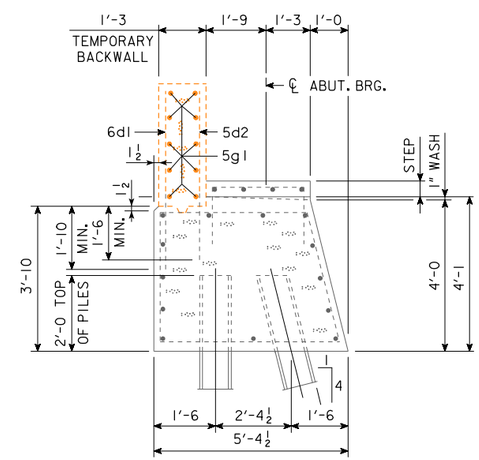

SECTION THROUGH ABUTMENT

EXPANSION DEVICE NOT SHOWN

PROGRESS PLANS

NOT FOR CONSTRUCTION

NOTE:

1. TEMPORARY BACKWALL REMOVAL SHALL OCCUR WHEN EXISTING TRAFFIC IS SHIFTED TO WB BRIDGE AND THE TEMPORARY BRIDGE HAS BEEN REMOVED. SEE DESIGN SHEET XX FOR TEMPORARY BRIDGE DETAILS.

2. BARRIER RAIL NOT SHOWN IN DETAILS.

DESIGN FOR 0° SKEW

1097'-0 X 40'-0 PRETENSIONED PRESTRESSED CONCRETE BEAM E.B. BRIDGE

156'-0 END SPANS 157'-0 INTERIOR SPAN

ABUTMENT REMOVAL DETAILS

1A 2 STA. 400+85.00, RT. 32.00' JUNE 2019

FREMONT COUNTY

IOWA DEPARTMENT OF TRANSPORTATION - HIGHWAY DIVISION

DESIGN SHEET NO. 14 OF 2 FILE NO. 31719 DESIGN NO. 119

BENCH MARK :

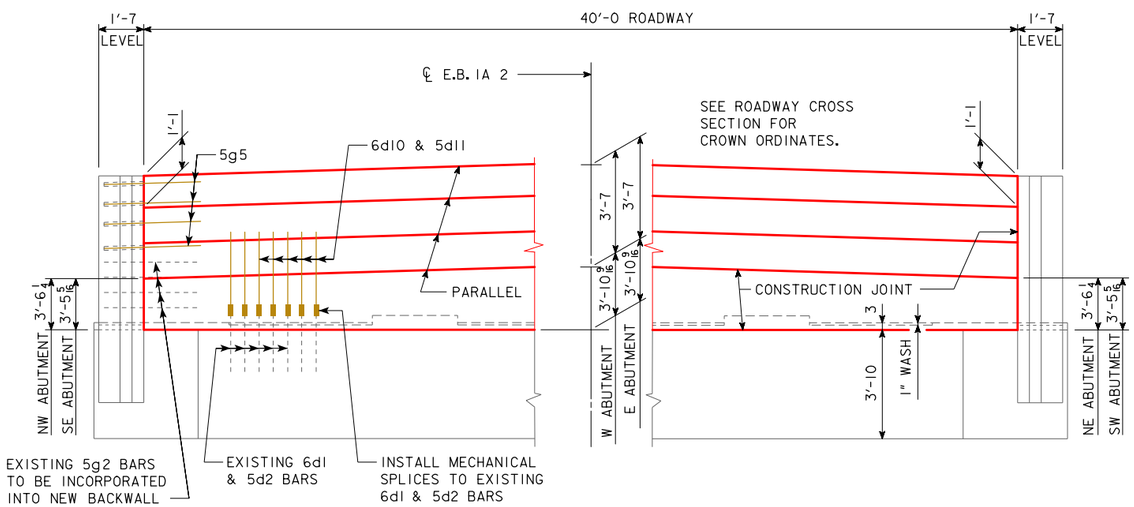

REAR ELEVATION

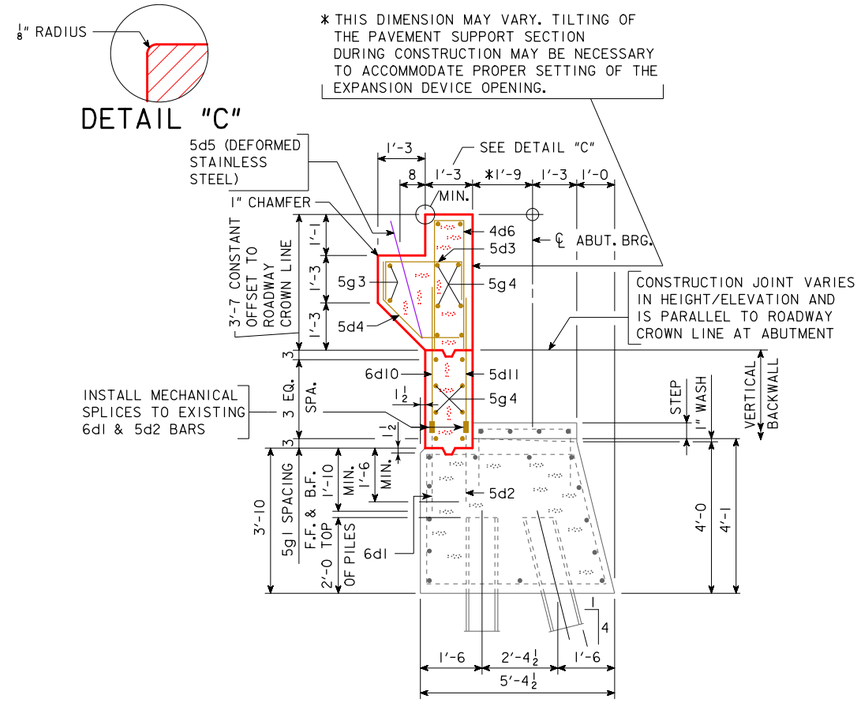

SECTION THROUGH ABUTMENT

EXPANSION DEVICE NOT SHOWN

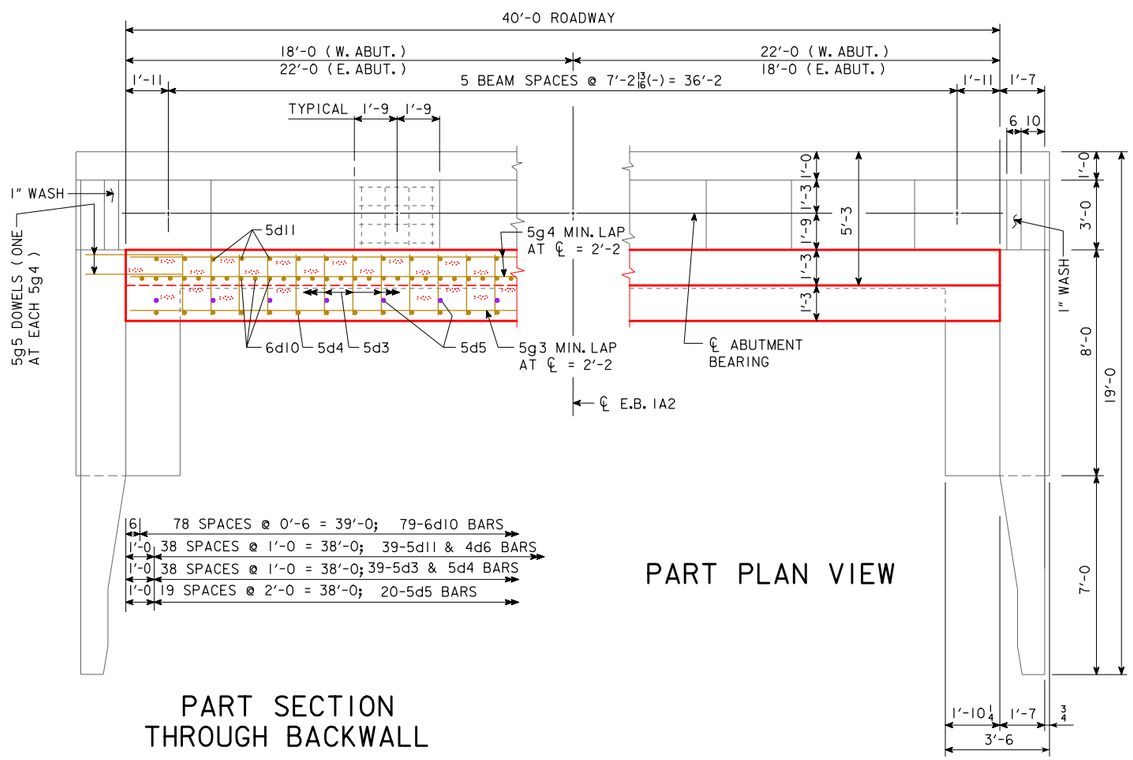

PART PLAN VIEW

PART SECTION THROUGH BACKWALL

PROGRESS PLANS
6/10/2019

NOTE: BARRIER RAIL NOT SHOWN IN DETAILS.

DESIGN FOR 0° SKEW

1097'-0 X 40'-0 PRETENSIONED PRESTRESSED CONCRETE BEAM E.B. BRIDGE

156'-0 END SPANS 157'-0 INTERIOR SPAN

ABUTMENT DETAILS - ULTIMATE BUILD

IA 2 STA. 400+85.00, RT. 32.00' JUNE 2019

FREMONT COUNTY

IOWA DEPARTMENT OF TRANSPORTATION - HIGHWAY DIVISION

DESIGN SHEET NO. 15 OF 2 FILE NO. 31719 DESIGN NO. 119

ABUTMENT NOTES:

MINIMUM CLEAR DISTANCE FROM FACE OF CONCRETE TO NEAR REINFORCING BAR IS TO BE 2" UNLESS OTHERWISE NOTED OR SHOWN.

THE MASKWALL IS TO BE POURED BEFORE THE SUPERSTRUCTURE DECK IS POURED.

CONSTRUCTION JOINT KEYWAYS ARE TO BE FORMED WITH BEVELED 2x6's.

THE PORTION OF THE BACKWALL CONTAINING THE ABUTMENT ANCHORAGE OF THE EXPANSION DEVICE IS TO BE PLACED AFTER THE BRIDGE DECK IS PLACED.

CONCRETE SEALER IS TO BE APPLIED TO THE ABUTMENT BRIDGE SEAT IN ACCORDANCE WITH THE CURRENT IOWA D.O.T. STANDARD SPECIFICATIONS.

THE COST OF PREFORMED EXPANSION JOINT FILLER, AND COST OF FURNISHING AND PLACING CONCRETE SEALER IS TO BE INCLUDED IN THE PRICE BID FOR "STRUCTURAL CONCRETE (BRIDGE)".

PAVING NOTCH DOWELS SHALL BE STAINLESS STEEL DEFORMED BAR GRADE 60, MEETING THE REQUIREMENTS OF MATERIALS I.M. 452.

IF NECESSARY TO PREVENT DAMAGE TO THE END OF THE BRIDGE DECK AND BACKWALL FROM CONSTRUCTION EQUIPMENT, AN APPROPRIATE METHOD OF PROTECTION APPROVED BY THE ENGINEER SHALL BE PROVIDED BY THE BRIDGE CONTRACTOR AT NO EXTRA COST TO THE STATE.

BENT BAR DETAILS

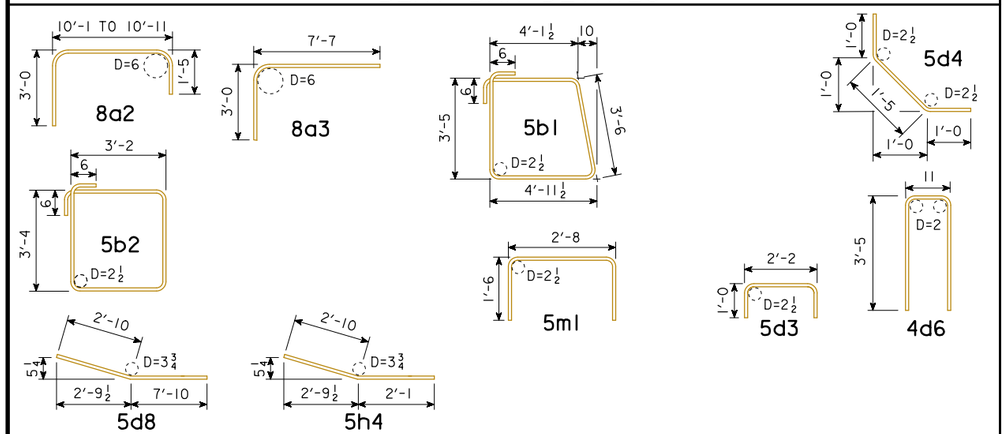

NOTE: ALL DIMENSIONS ARE OUT TO OUT. D = PIN DIA

REINFORCING BAR LIST - WEST ABUTMENT

	BAR	LOCATION	SHAPE	NO.	LENGTH	WEIGHT
EPOXY COATED BARS	8a1	FOOTING LONGITUDINAL		13	42'-11	1490
	8a2	WING FOOTING		10	14'-11	398
	8a3	WING FOOTING		10	10'-7	283
	5b1	FOOTING HOOPS		64	17'-0	1135
	5b2	WING FOOTING HOOPS		10	14'-0	146
	Δ 6d1	BACKWALL VERTICAL B.F.		79	5'-7	663
	Δ 5d2	BACKWALL VERTICAL F.F.		39	5'-5	220
	5d3	PAVING NOTCH		39	4'-2	169
	5d4	PAVING NOTCH		39	3'-5	139
	4d6	BACKWALL VERTICAL HOOP		39	7'-9	202
	5d8	WING EXTENSION F.F. HORIZONTAL		7	10'-8	78
	5d9	WING EXTENSION B.F. HORIZONTAL		21	10'-8	234
	6d10	BACKWALL VERTICAL B.F.		79	5'-10	692
	5d11	BACKWALL VERTICAL F.F.		39	5'-8	231
	5e1	MASKWALL VERTICAL		16	7'-4	122
	5e2	WING EXTENSION VERTICAL		36	8'-5	316
	5f3	MASKWALL HORIZONTAL		24	4'-10	121
	5g2	BACKWALL DOWELS		20	4'-5	92
	5g3	PAVING NOTCH LONGITUDINAL		4	20'-11	87
	5g4	BACKWALL LONGITUDINAL		32	20'-11	698
	5g5	BACKWALL DOWELS		16	4'-5	74
	5h2	WING EXTENSION B.F. HORIZONTAL		9	4'-11	46
	5h4	WING EXTENSION F.F. HORIZONTAL		3	4'-11	15
	5m1	BEAM STEPS TRANSVERSE		24	5'-8	142
	5n1	BEAM STEPS LONGITUDINAL		24	3'-2	79
		REINFORCING STEEL - EPOXY COATED - TOTAL (LBS.)				7872
S.S. BARS	5d5	PAVING NOTCH DOWELS (STAINLESS STEEL)		20	3'-6	73
		STAINLESS STEEL - TOTAL (LBS.)				73

REINFORCING BAR LIST - EAST ABUTMENT

	BAR	LOCATION	SHAPE	NO.	LENGTH	WEIGHT
EPOXY COATED BARS	8a1	FOOTING LONGITUDINAL		13	42'-11	1490
	8a2	WING FOOTING		10	14'-11	398
	8a3	WING FOOTING		10	10'-7	283
	5b1	FOOTING HOOPS		64	17'-0	1135
	5b2	WING FOOTING HOOPS		10	14'-0	146
	Δ 6d1	BACKWALL VERTICAL B.F.		79	5'-7	663
	Δ 5d2	BACKWALL VERTICAL F.F.		39	5'-5	220
	5d3	PAVING NOTCH		39	4'-2	169
	5d4	PAVING NOTCH		39	3'-5	139
	4d6	BACKWALL VERTICAL HOOP		39	7'-9	202
	5d8	WING EXTENSION F.F. HORIZONTAL		14	10'-8	156
	5d9	WING EXTENSION B.F. HORIZONTAL		14	10'-8	156
	6d10	BACKWALL VERTICAL B.F.		79	5'-10	692
	5d11	BACKWALL VERTICAL F.F.		39	5'-8	231
	5e1	MASKWALL VERTICAL		16	7'-4	122
	5e2	WING EXTENSION VERTICAL		36	8'-5	316
	5f3	MASKWALL HORIZONTAL		24	4'-10	121
	5g2	BACKWALL DOWELS		20	4'-5	92
	5g3	PAVING NOTCH LONGITUDINAL		4	20'-11	87
	5g4	BACKWALL LONGITUDINAL		32	20'-11	698
	5g5	BACKWALL DOWELS		16	4'-5	74
	5h2	WING EXTENSION B.F. HORIZONTAL		6	4'-11	31
	5h4	WING EXTENSION F.F. HORIZONTAL		6	4'-11	31
	5m1	BEAM STEPS TRANSVERSE		24	5'-8	142
	5n1	BEAM STEPS LONGITUDINAL		24	3'-2	79
		REINFORCING STEEL - EPOXY COATED - TOTAL (LBS.)				7873
S.S. BARS	5d5	PAVING NOTCH DOWELS (STAINLESS STEEL)		20	3'-6	73
		STAINLESS STEEL - TOTAL (LBS.)				73

Δ LENGTH TO BE MODIFIED AS REQUIRED. ANY MODIFICATION TO BAR LENGTH SHALL BE CONSIDERED INCIDENTAL TO "TEMPORARY DETOUR BRIDGE SUPERSTRUCTURE"

REINFORCING BAR LIST - ONE TEMP. BACKWALL

	BAR	LOCATION	SHAPE	NO.	LENGTH	WEIGHT
EPOXY COATED BARS	5g1	BACKWALL LONGITUDINAL		20	20'-11	436
		REINF. STEEL - EPOXY COATED - TEMP. BACKWALL - TOTAL (LBS.)				436

NOTE: 5g1 BARS NOT INCLUDED IN REINFORCING QUANTITY. TOTAL SHOWN IS APPROXIMATE WEIGHT BASED ON TEMPORARY BACKWALL HEIGHT SHOWN, WHICH IS SUBJECT TO CHANGE. TEMPORARY BACKWALL REINFORCING SHALL BE INCIDENTAL TO PRICE BID FOR "TEMPORARY DETOUR BRIDGE SUPERSTRUCTURE".

CONCRETE PLACEMENT QUANTITIES

LOCATION	WEST ABUT.	EAST ABUT.
FOOTING AND STEPS	37.9	37.9
BACKWALL BELOW CONSTR. JOINT	6.6	6.6
BACKWALL ABOVE CONSTR. JOINT	10.1	10.1
NORTH WING EXTENSION	3.3	3.3
SOUTH WING EXTENSION	3.3	3.3
NORTH WING MASKWALL	0.5	0.5
SOUTH WING MASKWALL	0.5	0.5
TOTAL (C.Y.)	62.2	62.2

NOTE:
CONCRETE AND REINFORCING STEEL QUANTITIES ARE INCLUDED ON THE SUMMARY QUANTITIES SHEET.

PROGRESS PLANS
6/10/2019

DESIGN FOR 0° SKEW

1097'-0 X 40'-0 PRETENSIONED PRESTRESSED CONCRETE BEAM E.B. BRIDGE

156'-0 END SPANS 157'-0 INTERIOR SPAN

ABUTMENT QUANTITIES

IA 2 STA. 400+85.00, RT. 32.00' JUNE 2019

FREMONT COUNTY

IOWA DEPARTMENT OF TRANSPORTATION - HIGHWAY DIVISION

DESIGN SHEET NO. 16 OF 2 FILE NO. 31719 DESIGN NO. 119

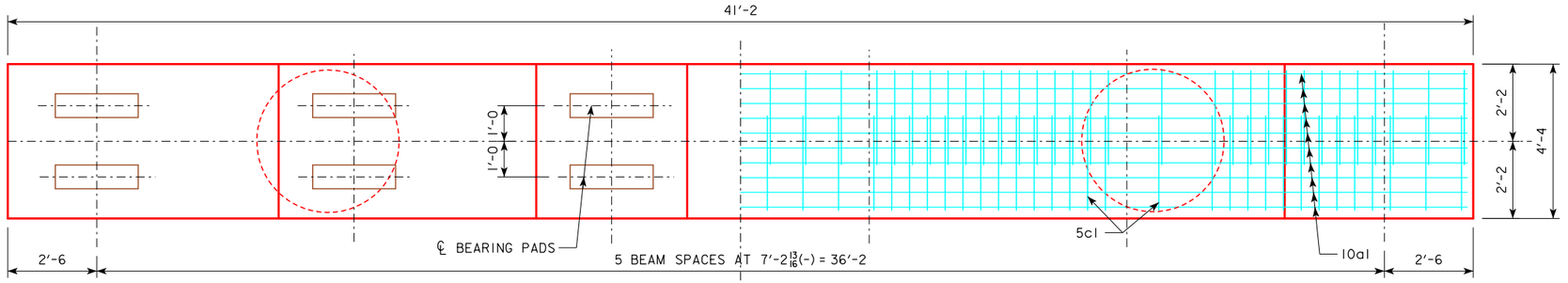

PIER CAP PLAN

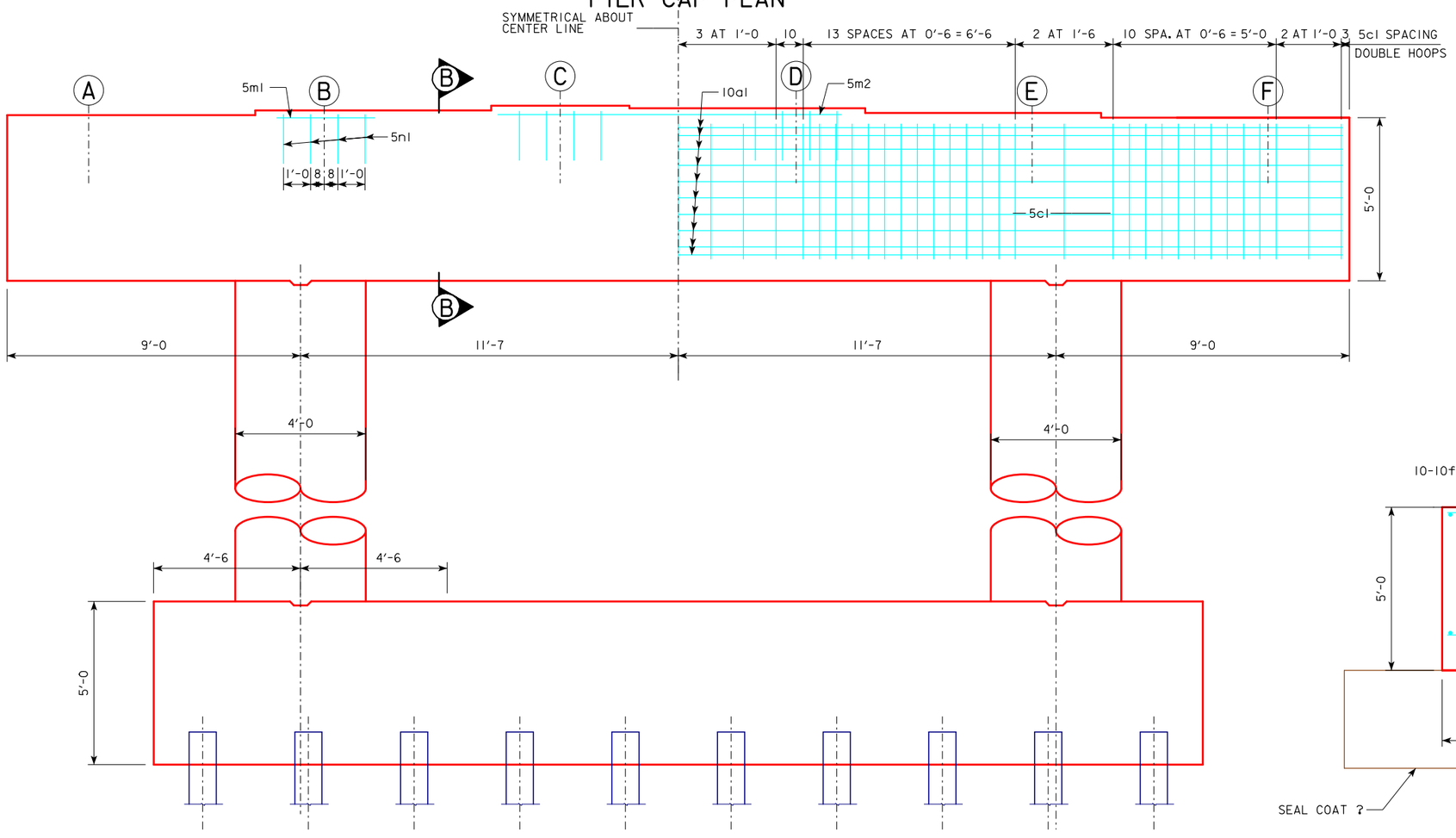

FRONT ELEVATION

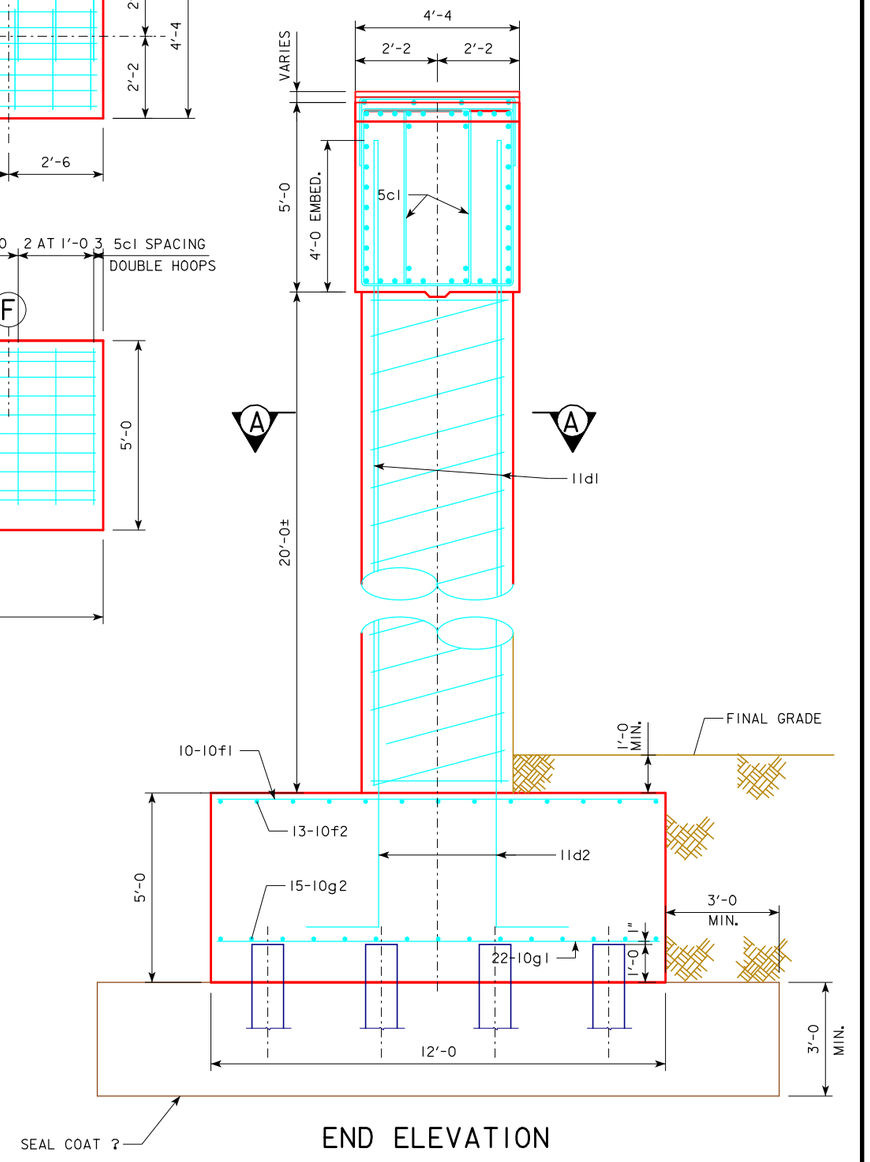

END ELEVATION

THE LUMP SUM BID ITEM, "EXCAVATE AND DEWATER" SHALL INCLUDE ALL COSTS ASSOCIATED WITH THE EXCAVATION AND DEWATERING REQUIRED TO CONSTRUCT THE PIER FOOTINGS IN THE DRY, IN ACCORDANCE WITH SECTION 2405, OF THE STANDARD SPECIFICATIONS. THE LENGTH AND WIDTH OF THE SEAL COAT WAS BASED ON THE REQUIRED ONE FOOT CLEARANCE BETWEEN THE TIP OF THE SHEET PILES AND THE BATTERED PILING. THE CONCRETE SEAL COAT, IF USED, SHALL BE 3'-0 FEET THICK, BASED ON A WATER ELEVATION OF _____. IF THE WATER ELEVATION IS HIGHER THAN _____ AT THE TIME OF CONSTRUCTION, A LARGER SEAL COAT MAY BE REQUIRED TO MAINTAIN THE CLEARANCE BETWEEN THE SHEET PILES AND BATTERED PILING. THE BRIDGE ENGINEER SHALL BE NOTIFIED BEFORE USING A LARGER SEAL COAT.

DO NOT SCALE DRAWING

DESIGN FOR 0° SKEW

1097'-0 X 40'-0 PRETENSIONED PRESTRESSED CONCRETE BEAM E.B. BRIDGE

156'-0 END SPANS — 157'-0 INTERIOR SPAN

PIER DETAILS - FRAME PIER OPTION

IA 2 STA. 400+85.00, RT. 32.00' — JUNE 2019

FREMONT COUNTY

IOWA DEPARTMENT OF TRANSPORTATION - HIGHWAY DIVISION

DESIGN SHEET NO. 17 OF ? FILE NO. 31719 DESIGN NO. 119

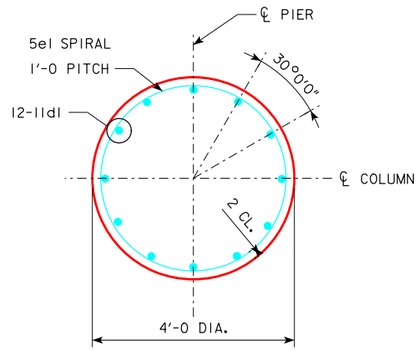

SECTION A-A

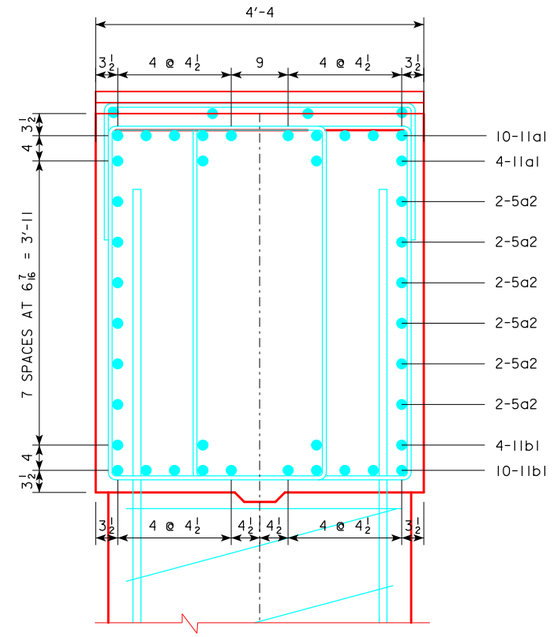

SECTION B-B

STEP ELEVATIONS

	BEAM A	BEAM B	BEAM C	BEAM D	BEAM E	BEAM F
PIER 1						
PIER 2						
PIER 3						
PIER 4						
PIER 5						
PIER 6						

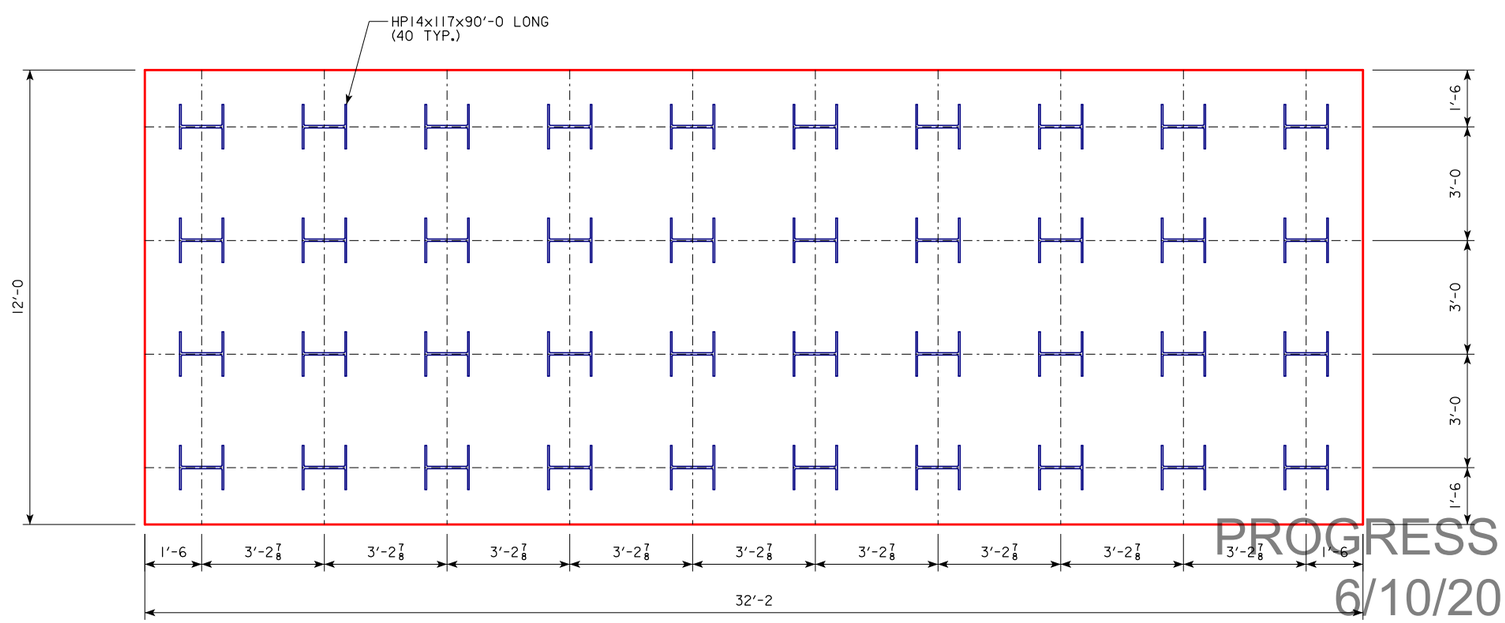

FOOTING PLAN

PROGRESS PLANS
6/10/2019

REINFORCING BAR LIST - PIER

BAR	LOCATION	SHAPE	NO.	LENGTH	WEIGHT
10a1	PIER CAP, LONGITUDINAL, TOP		26	40'-10	4568
5a2	PIER CAP, LONGITUDINAL, SIDES		8	40'-10	341
10b1	PIER CAP, LONGITUDINAL, BOTTOM		15	40'-10	2636
5c1	PIER CAP, HOOPS		220	13'-10	3174
5n1	PIER CAP, UNDER BEAM		12	7'-0	88
5m1	PIER CAP, UNDER BEAM		12	4'-0	50
11d1	PIER COLUMN, VERTICALS		24	25'-0	3188
11d2	PIER FOOTING TO COLUMN DOWELS		24	12'-6	1594
5e1	PIER COLUMN, SPIRAL		2	280'-0	584
10f1	PIER FOOTING, TRASVERSE, TOP		20	8'-8	746
10f2	PIER FOOTING, LONGITUDINAL, TOP		26	11'-8	1305
10g1	PIER FOOTING, TRASVERSE, BOTTOM		44	8'-8	1641
10g2	PIER FOOTING, LONGITUDINAL, BOTTOM		30	11'-8	1506
			REINFORCING STEEL - TOTAL (LBS.)		21421

CONCRETE PLACEMENT QUANT. PIER

LOCATION	QUANTITY
COLUMNS	
CAP	
TOTAL (CU. YDS.)	

ESTIMATED QUANTITIES PIER

ITEM	UNIT	QUANTITY
STRUCTURAL CONCRETE (BRIDGE)	CY	
REINFORCING STEEL	LBS	

BENT BAR DETAILS

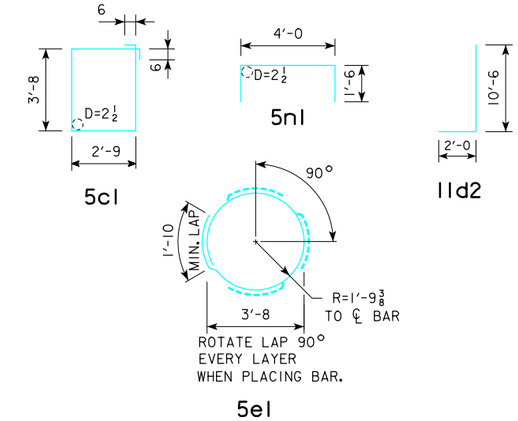

NOTE: ALL DIMENSIONS ARE OUT TO OUT. D= PIN DIAMETER.

DESIGN FOR 0° SKEW

1097'-0 X 40'-0 PRETENSIONED PRESTRESSED CONCRETE BEAM E.B. BRIDGE

156'-0 END SPANS 157'-0 INTERIOR SPAN

PIER DETAILS - FRAME PIER OPTION

IA 2 STA. 400+85.00, RT. 32.00' JUNE 2019

FREMONT COUNTY

IOWA DEPARTMENT OF TRANSPORTATION - HIGHWAY DIVISION

DESIGN SHEET NO. 18 OF 2 FILE NO. 31719 DESIGN NO. 119

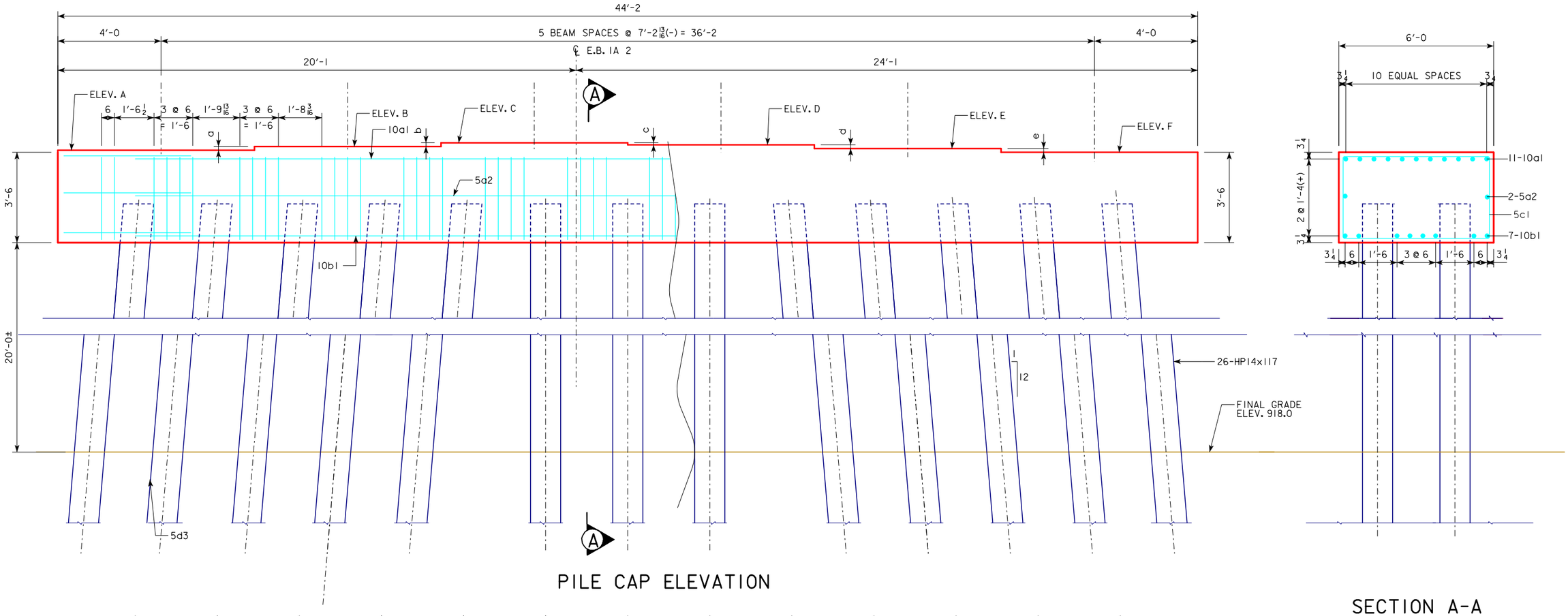

PILE CAP ELEVATION

SECTION A-A

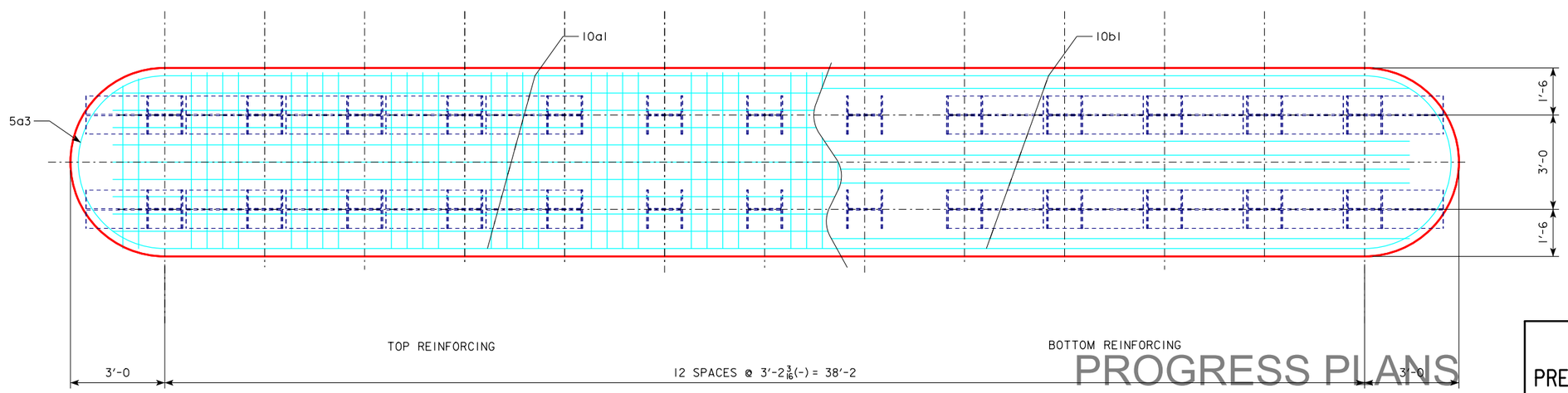

PILE CAP PLAN

NOTE:
1. THIS SHEET IS FOR THE INITIAL BUILD OF THE PILE BENT DURING PROJECT STAGE 2.

PROGRESS PLANS
6/10/2019

DESIGN FOR 0° SKEW

1097'-0 X 40'-0 PRETENSIONED PRESTRESSED CONCRETE BEAM E.B. BRIDGE

156'-0 END SPANS 157'-0 INTERIOR SPAN

PIER DETAILS - PILE BENT OPTION

1A 2 STA. 400+85.00, RT. 32.00' JUNE 2019

FREMONT COUNTY

IOWA DEPARTMENT OF TRANSPORTATION - HIGHWAY DIVISION

DESIGN SHEET NO. 19 OF 2 FILE NO. 31719 DESIGN NO. 119

DESIGN TEAM Stanley Consultants Inc. | FREMONT COUNTY | PROJECT NUMBER NHSX-002-1(123)--3H-36 | SHEET NUMBER 20

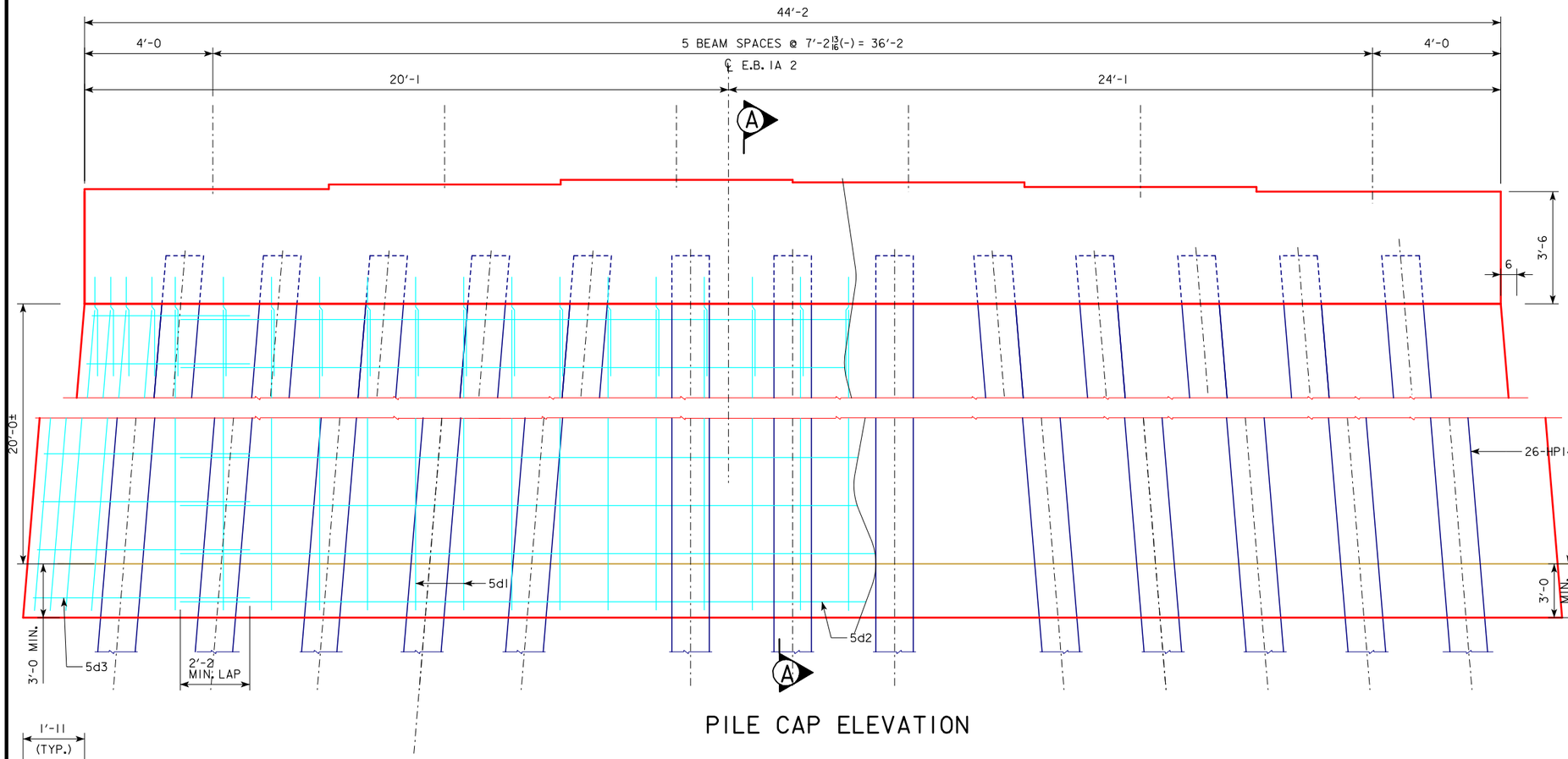

PILE CAP ELEVATION

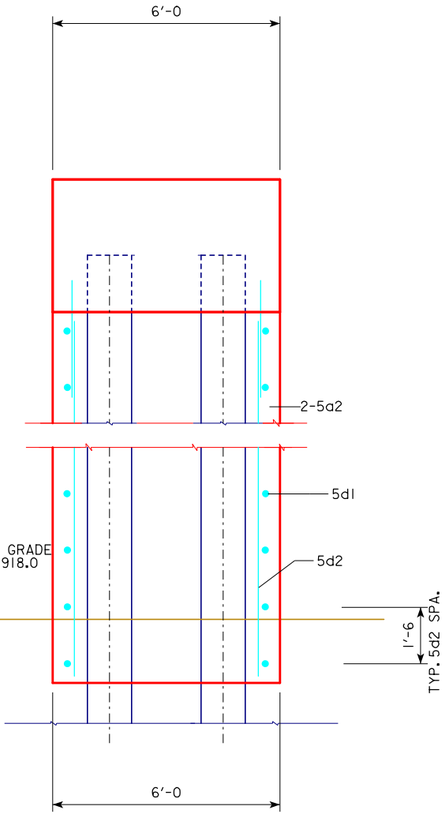

SECTION A-A

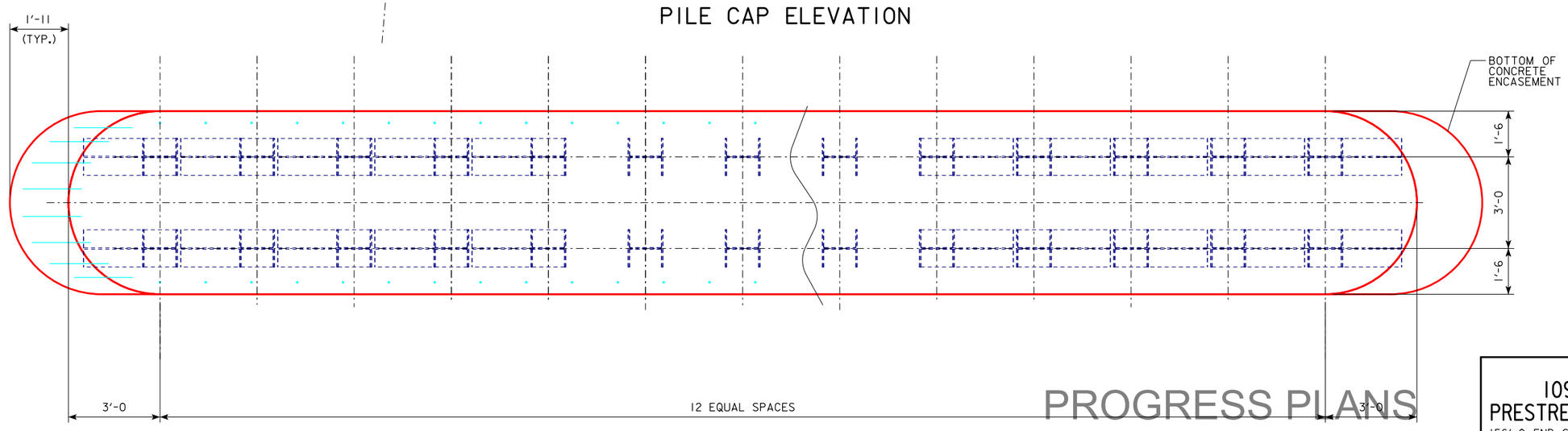

PILE CAP PLAN

PROGRESS PLANS
6/10/2019

DESIGN FOR 0° SKEW

1097'-0 X 40'-0 PRETENSIONED
PRESTRESSED CONCRETE BEAM E.B. BRIDGE

156'-0 END SPANS 157'-0 INTERIOR SPAN

PIER DETAILS - PILE BENT OPTION

IA 2 STA. 400+85.00, RT. 32.00' JUNE 2019

FREMONT COUNTY

IOWA DEPARTMENT OF TRANSPORTATION - HIGHWAY DIVISION

DESIGN SHEET NO. 20 OF ? FILE NO. 31719 DESIGN NO. 119

DESIGN TEAM Stanley Consultants Inc. | FREMONT COUNTY | PROJECT NUMBER NHSX-002-1(123)--3H-36 | SHEET NUMBER 21

6/10/2019 12:01:48 AM untitled pw:\\projectwise.dot.int.lan:PWMain\Documents\Projects\3600207019\BRFinal\Stanley\BRG_36002123.dgn 360119S020 11x17_pdf.pltcfg

STEP ELEVATIONS

	BEAM A	BEAM B	BEAM C	BEAM D	BEAM E	BEAM F
PIER 1						
PIER 2						
PIER 3						
PIER 4						
PIER 5						
PIER 6						

REINFORCING BAR LIST - PIER STAGE 1

BAR	LOCATION	SHAPE	NO.	LENGTH	WEIGHT
10a1	PIER CAP, LONGITUDINAL, TOP		26	40'-10	4568
5a2	PIER CAP, LONGITUDINAL, SIDES		8	40'-10	341
10b1	PIER CAP, LONGITUDINAL, BOTTOM		15	40'-10	2636
5c1	PIER CAP, HOOPS		220	13'-10	3174
5n1	PIER CAP, UNDER BEAM		12	7'-0	88
5m1	PIER CAP, UNDER BEAM		12	4'-0	50
11d1	PIER COLUMN, VERTICALS		24	25'-0	3188
11d2	PIER FOOTING TO COLUMN DOWELS		24	12'-6	1594
5e1	PIER COLUMN, SPIRAL		2	280'-0	584
10f1	PIER FOOTING, TRASVERSE, TOP		20	8'-8	746
10f2	PIER FOOTING, LONGITUDINAL, TOP		26	11'-8	1305
10g1	PIER FOOTING, TRASVERSE, BOTTOM		44	8'-8	1641
10g2	PIER FOOTING, LONGITUDINAL, TOP		30	11'-8	1506
	REINFORCING STEEL - TOTAL (LBS.)				21421

CONCRETE PLACEMENT QUANT. PIER

LOCATION	QUANTITY
TOTAL (CU. YDS.)	

ESTIMATED QUANTITIES PIER

ITEM	UNIT	QUANTITY

BENT BAR DETAILS

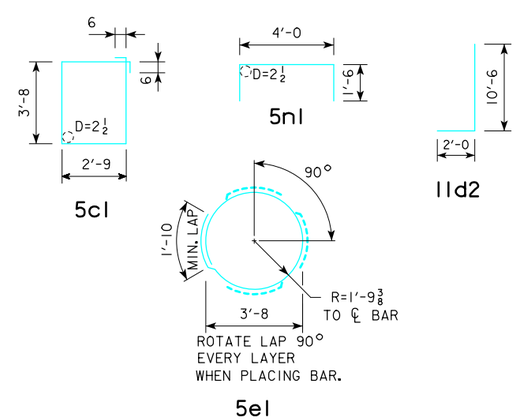

NOTE: ALL DIMENSIONS ARE OUT TO OUT. D= PIN DIAMETER.

REINFORCING BAR LIST - PIER STAGE 2

BAR	LOCATION	SHAPE	NO.	LENGTH	WEIGHT
10a1	PIER CAP, LONGITUDINAL, TOP		26	40'-10	4568
5a2	PIER CAP, LONGITUDINAL, SIDES		8	40'-10	341
10b1	PIER CAP, LONGITUDINAL, BOTTOM		15	40'-10	2636
5c1	PIER CAP, HOOPS		220	13'-10	3174
5n1	PIER CAP, UNDER BEAM		12	7'-0	88
5m1	PIER CAP, UNDER BEAM		12	4'-0	50
11d1	PIER COLUMN, VERTICALS		24	25'-0	3188
11d2	PIER FOOTING TO COLUMN DOWELS		24	12'-6	1594
5e1	PIER COLUMN, SPIRAL		2	280'-0	584
10f1	PIER FOOTING, TRASVERSE, TOP		20	8'-8	746
10f2	PIER FOOTING, LONGITUDINAL, TOP		26	11'-8	1305
10g1	PIER FOOTING, TRASVERSE, BOTTOM		44	8'-8	1641
10g2	PIER FOOTING, LONGITUDINAL, TOP		30	11'-8	1506
	REINFORCING STEEL - TOTAL (LBS.)				21421

CONCRETE PLACEMENT QUANT. PIER

LOCATION	QUANTITY
COLUMNS	
CAP	
TOTAL (CU. YDS.)	

ESTIMATED QUANTITIES PIER

ITEM	UNIT	QUANTITY
STRUCTURAL CONCRETE (BRIDGE)	CY	
REINFORCING STEEL	LBS	

BENT BAR DETAILS

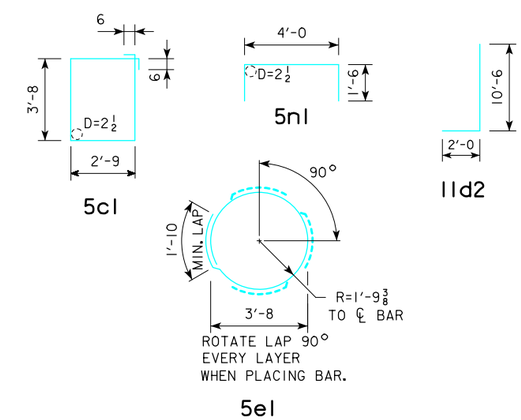

NOTE: ALL DIMENSIONS ARE OUT TO OUT. D= PIN DIAMETER.

PROGRESS PLANS
6/10/2019

DESIGN FOR 0° SKEW

1097'-0 X 40'-0 PRETENSIONED PRESTRESSED CONCRETE BEAM E.B. BRIDGE

156'-0 END SPANS 157'-0 INTERIOR SPAN

PIER DETAILS - PILE BENT OPTION

IA 2 STA. 400+85.00, RT. 32.00' JUNE 2019

FREMONT COUNTY

IOWA DEPARTMENT OF TRANSPORTATION - HIGHWAY DIVISION

DESIGN SHEET NO. 21 OF 2 FILE NO. 31719 DESIGN NO. 119

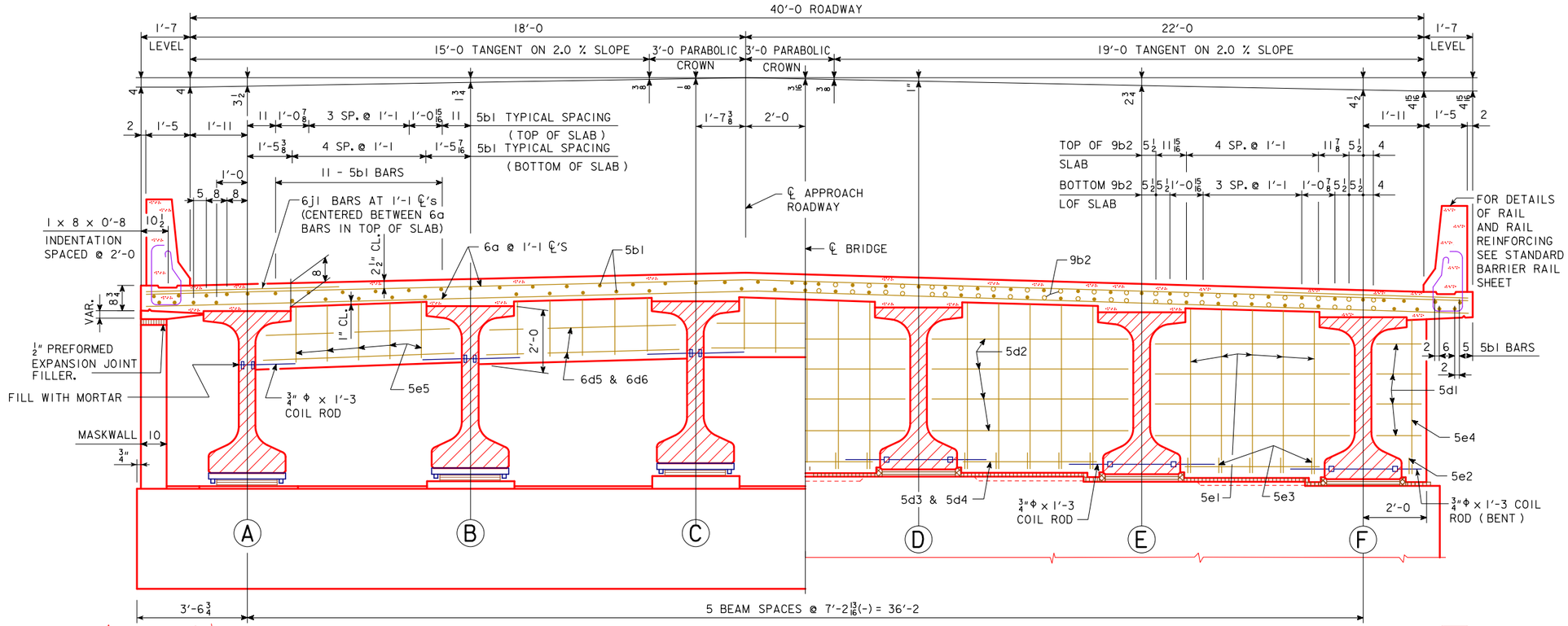

HALF SECTION NEAR ABUTMENT

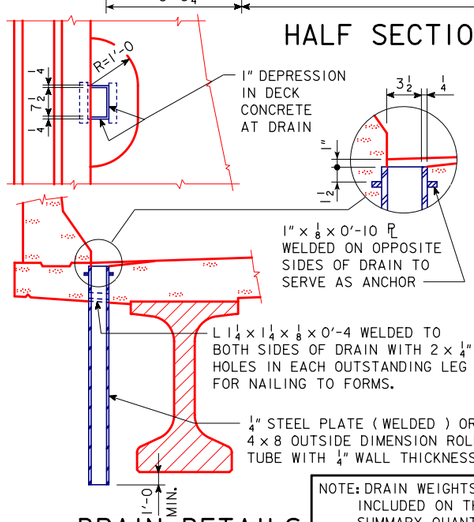

DRAIN DETAILS

NOTE: DRAIN WEIGHTS ARE INCLUDED ON THE SUMMARY QUANTITIES SHEET.

NOTE :
DRAINS ARE TO BE GALVANIZED. ____ DRAINS REQUIRED.
SEE "SITUATION PLAN" FOR LOCATION. WEIGHT OF DRAINS IS INCLUDED IN THE QUANTITY FOR "____".
WEIGHT IS BASED ON ROLLED TUBE.

DATA FOR ONE DRAIN	
BEAM SIZE	BTE
DRAIN WEIGHT (LBS.)	136
DRAIN LENGTH (FT.)	6'-11 3/4

SLAB AREA = 29.24 SQ. FT.
SLAB AREA DOES NOT INCLUDE THE HAUNCH.

NOTE: FOR DETAILS OF INTERMEDIATE DIAPHRAGMS SEE DESIGN SHEET ____.

SUPERSTRUCTURE NOTES:

THE BRIDGE DECK AS SHOWN INCLUDES 1/2" INTEGRAL WEARING SURFACE.

THE PIER AND ABUTMENT DIAPHRAGM CONCRETE IS TO BE PLACED MONOLITHICALLY WITH THE BRIDGE DECK.

COST OF ALL PREFORMED EXPANSION JOINT FILLER MATERIAL IS TO BE INCLUDED IN THE PRICE BID FOR "STRUCTURAL CONCRETE (BRIDGE)".

ALL BEAMS ARE TO BE SET VERTICAL.

FORMS FOR THE BRIDGE DECK AND BARRIER RAIL ARE TO BE SUPPORTED BY THE PRESTRESSED CONCRETE BEAMS.

CLEAR DISTANCE FROM FACE OF CONCRETE TO NEAR REINFORCING BAR SHALL BE 2 INCHES UNLESS OTHERWISE NOTED OR SHOWN.

ALL DECK AND DIAPHRAGM REINFORCING IS TO BE WIRED IN PLACE AND ADEQUATELY SUPPORTED BEFORE CONCRETE IS PLACED.

TOP TRANSVERSE REINFORCING STEEL IS TO BE PARALLEL TO AND 2 1/2" CLEAR BELOW TOP OF DECK. BOTTOM TRANSVERSE REINFORCING STEEL IS TO BE PARALLEL TO AND 1" CLEAR ABOVE BOTTOM OF DECK. TOP AND BOTTOM REINFORCING STEEL IS TO BE SUPPORTED BY INDIVIDUAL BAR CHAIRS SPACED AT NOT MORE THAN 3'-0 CENTERS LONGITUDINALLY AND TRANSVERSELY, OR BY CONTINUOUS ROWS OF BAR-HIGH CHAIRS OR DECK BOLSTERS SPACED 4'-0 APART. I.M. 451.01 REQUIREMENTS SHALL APPLY FOR BAR CHAIRS, BAR HIGH CHAIRS, AND DECK BOLSTERS.

TRANSVERSE DECK REINFORCING MAY BE SPLICED WITH ONE LAP LOCATED AS FOLLOWS:

TOP BAR - LAP MIDWAY BETWEEN BEAMS (MIN. LAP = 1'-10).

BOTTOM BARS - LAP OVER BEAMS (MIN. LAP = 1'-10).

PAYMENT FOR REINFORCING BARS SHALL BE BASED ON NO SPLICES, AND NO ALLOWANCE SHALL BE MADE FOR THE ADDITIONAL LENGTH OF BAR REQUIRED FOR THE USE OF SPLICES.

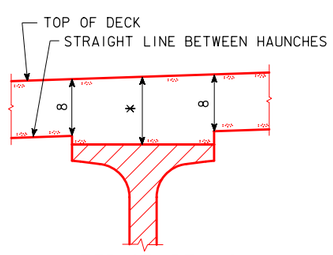

INTERIOR BEAMS

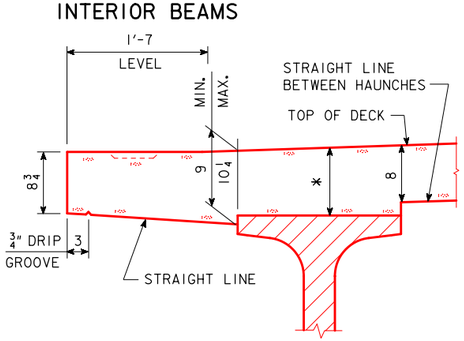

EXTERIOR BEAMS

TYPICAL DECK AND HAUNCH DETAIL

* FOR DECK THICKNESS OVER BEAMS SEE HAUNCH AND CAMBER DETAILS ON DESIGN SHEET ____.

HALF SECTION NEAR PIER

(FIXED PIER SHOWN)

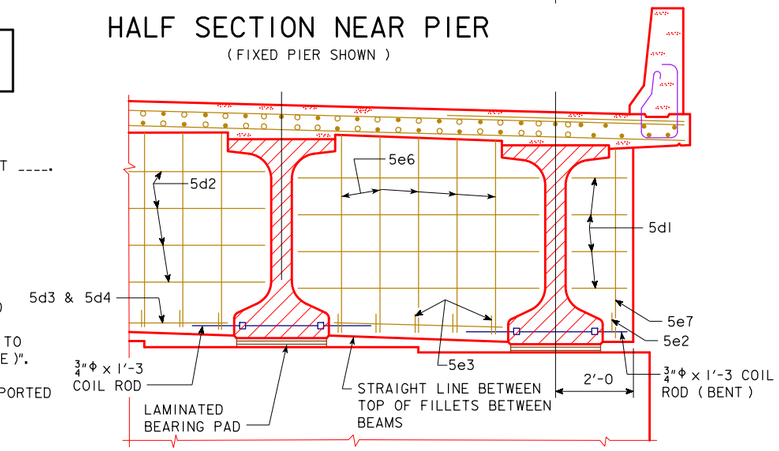

HALF SECTION NEAR PIER

(EXPANSION PIER SHOWN)

DESIGN FOR 0° SKEW

1097'-0 X 40'-0 PRETENSIONED PRESTRESSED CONCRETE BEAM E.B. BRIDGE

156'-0 END SPANS — 157'-0 INTERIOR SPAN

TRANSVERSE SECTION

IA 2 STA. 400+85.00, RT. 32.00' — JUNE 2019

FREMONT COUNTY

IOWA DEPARTMENT OF TRANSPORTATION - HIGHWAY DIVISION

DESIGN SHEET NO. 22 OF ? FILE NO. 31719 DESIGN NO. 119

PRELIMINARY PLANS 6/10/2019

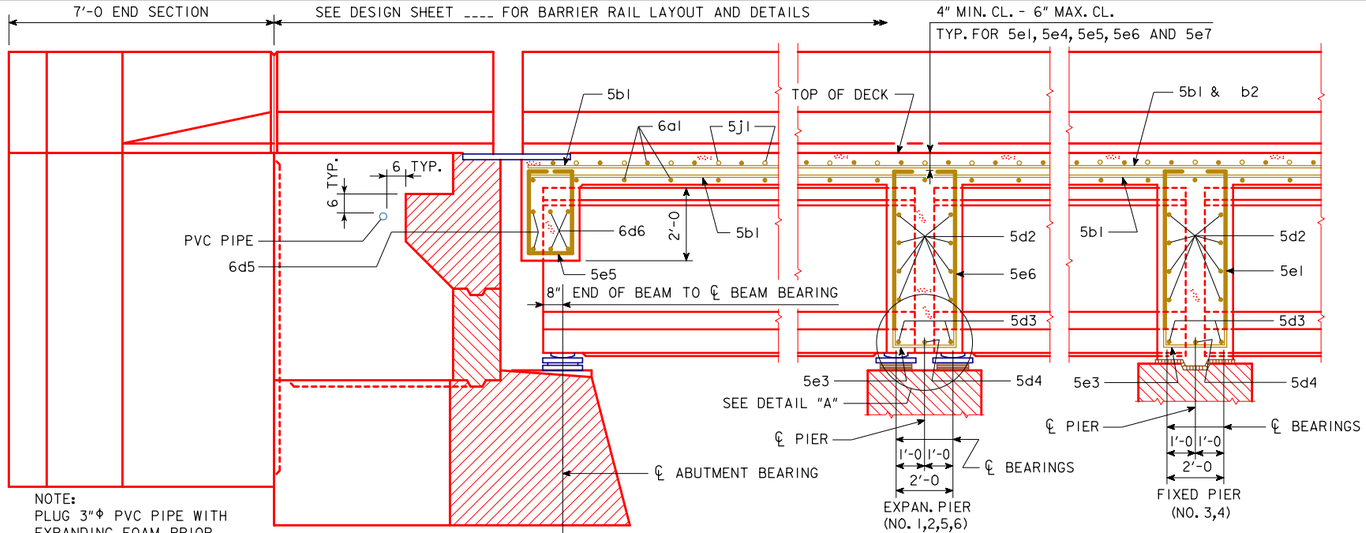

NOTE:
PLUG 3"Φ PVC PIPE WITH EXPANDING FOAM PRIOR TO BACKFILLING BEHIND ABUTMENTS.

PART LONGITUDINAL SECTION NEAR GUTTER

(FOR DETAILS OF INTERMEDIATE DIAPHRAGM SEE DESIGN SHEET ____).

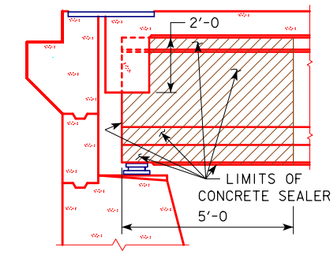

CONCRETE SEALER SHALL BE APPLIED TO THE ABUTMENT SEAT AND PRESTRESSED BEAM ENDS IN ACCORDANCE WITH ARTICLE 2403.03, P, 3, OF THE STANDARD SPECIFICATIONS. THE SEALING SHALL INCLUDE PORTIONS OF THE PRESTRESSED BEAM END THAT ARE NOT EMBEDDED IN THE ABUTMENT DIAPHRAGMS AS DETAILED ON THIS SHEET.

CONCRETE SEALER LIMITS FOR PRESTRESSED BEAM

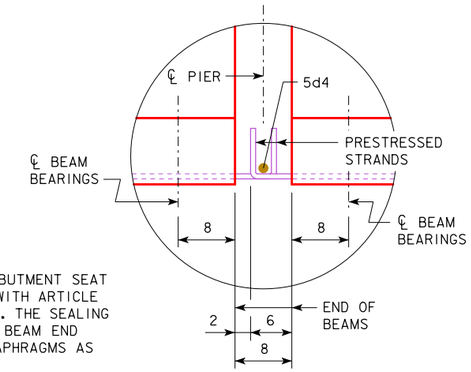

DETAIL "A"

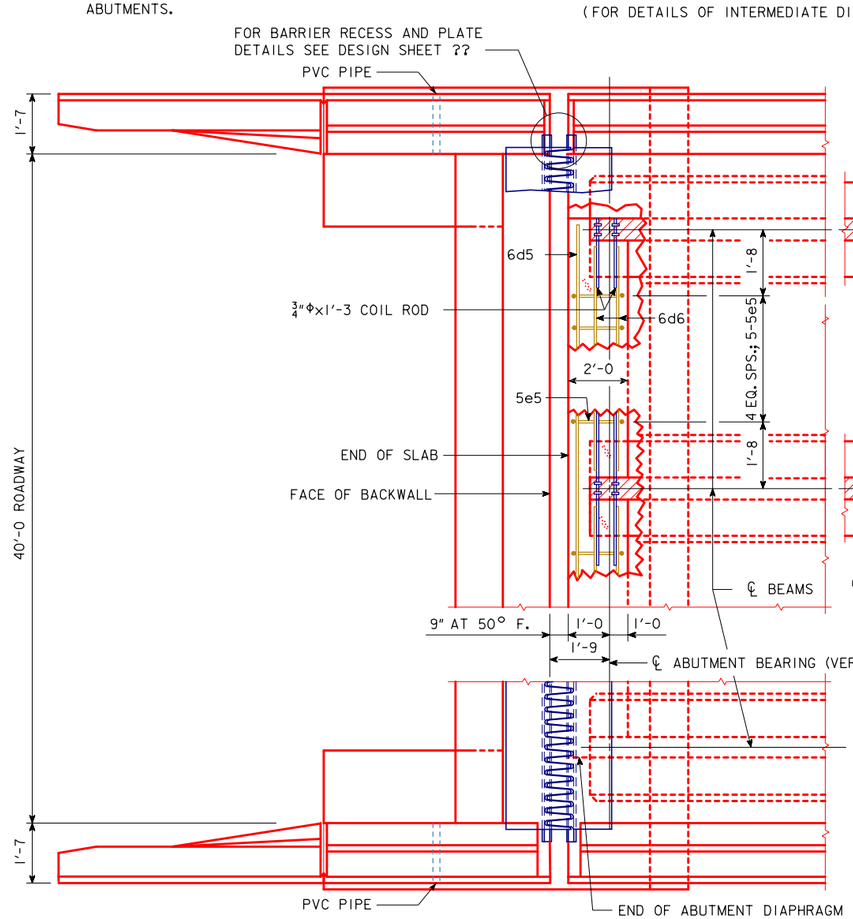

PART PLAN VIEW

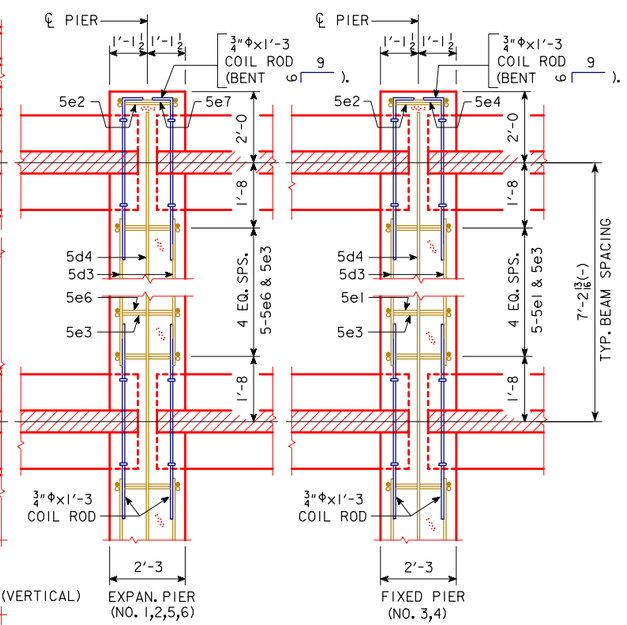

PART SECTION

(SEE CROSS SECTION THRU SLAB FOR NUMBER OF DIAPHRAGM HOOP BARS BETWEEN BEAMS)

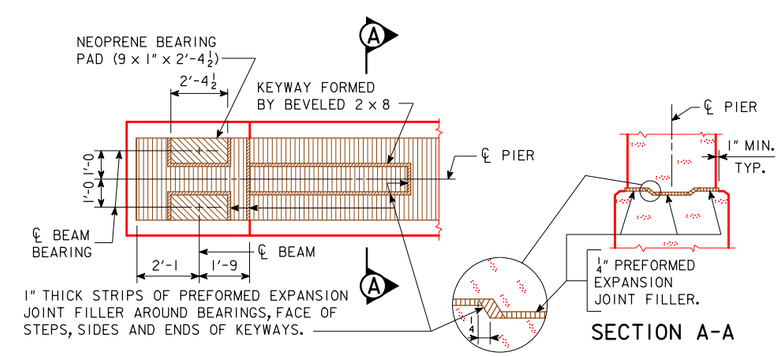

PART PLAN

SECTION A-A

TOP OF FIXED PIER DETAILS

PROGRESS PLANS
6/10/2019

DESIGN FOR 0° SKEW

1097'-0 X 40'-0 PRETENSIONED PRESTRESSED CONCRETE BEAM E.B. BRIDGE

156'-0 END SPANS — 157'-0 INTERIOR SPAN

PART PLAN AND LONGITUDINAL SECTION

IA 2 STA. 400+85.00, RT. 32.00' — JUNE 2019

FREMONT COUNTY

IOWA DEPARTMENT OF TRANSPORTATION - HIGHWAY DIVISION

DESIGN SHEET NO. 23 OF ? FILE NO. 31719 DESIGN NO. 119

DESIGN TEAM Stanley Consultants Inc.	PART PLAN & LONGIT. SECTION - "BTC", "BTD" OR "BTE" BEAMS, STUB ABUT., 0° SKEW	STANDARD SHEET 4542-BTCDE	FREMONT COUNTY	PROJECT NUMBER NHSX-002-1(123)--3H-36	SHEET NUMBER 24

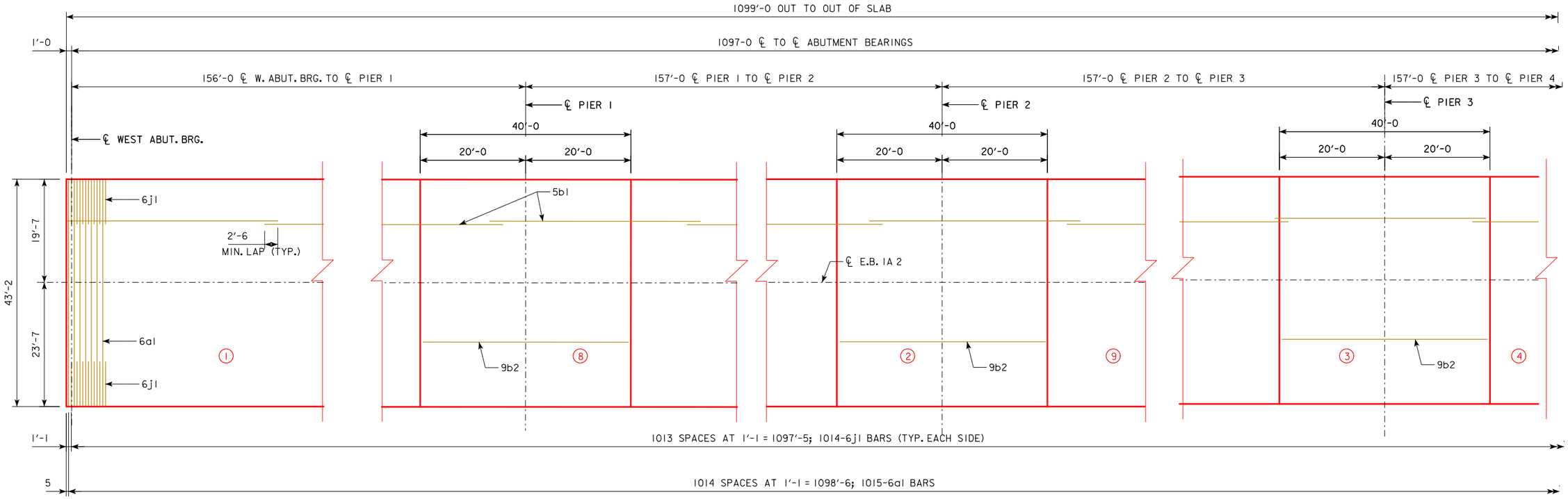

TOP SLAB REINFORCING LAYOUT

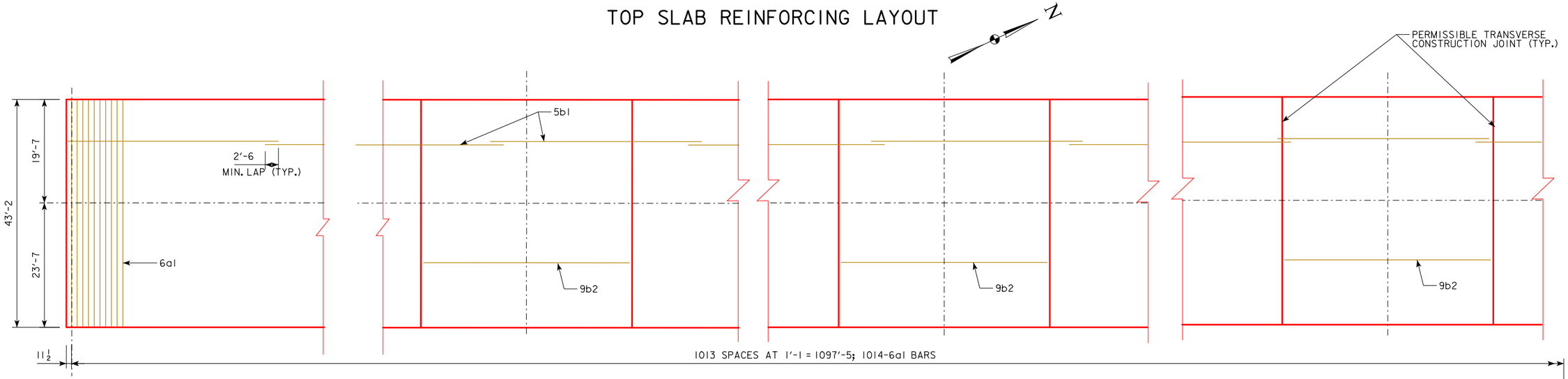

BOTTOM SLAB REINFORCING LAYOUT

NOTE: CONCRETE DECK SHALL BE PLACED IN SECTIONS AND SEQUENCES INDICATED. ALTERNATE PROCEDURES FOR PLACING DECK CONCRETE MAY BE SUBMITTED FOR APPROVAL TOGETHER WITH A STATEMENT OF PROPOSED METHOD AND EVIDENCE THAT THE CONTRACTOR POSSESSES THE NECESSARY EQUIPMENT AND FACILITIES TO ACCOMPLISH THE REQUIRED RESULTS. FOR APPROVED ALTERNATE PROCEDURES THE ENGINEER SHALL DETERMINE IF A RETARDING ADMIXTURE IS REQUIRED TO MAINTAIN PLASTICITY OF THE CONCRETE DECK DURING PLACEMENT.

PROGRESS PLANS
6/10/2019

DESIGN FOR 0° SKEW

1097'-0 X 40'-0 PRETENSIONED PRESTRESSED CONCRETE BEAM E.B. BRIDGE

156'-0 END SPANS — 157'-0 INTERIOR SPAN

SUPERSTRUCTURE DETAILS

1A 2 STA. 400+85.00, RT. 32.00' — JUNE 2019

FREMONT COUNTY

IOWA DEPARTMENT OF TRANSPORTATION - HIGHWAY DIVISION

DESIGN SHEET NO. 24 OF ? FILE NO. 31719 DESIGN NO. 119

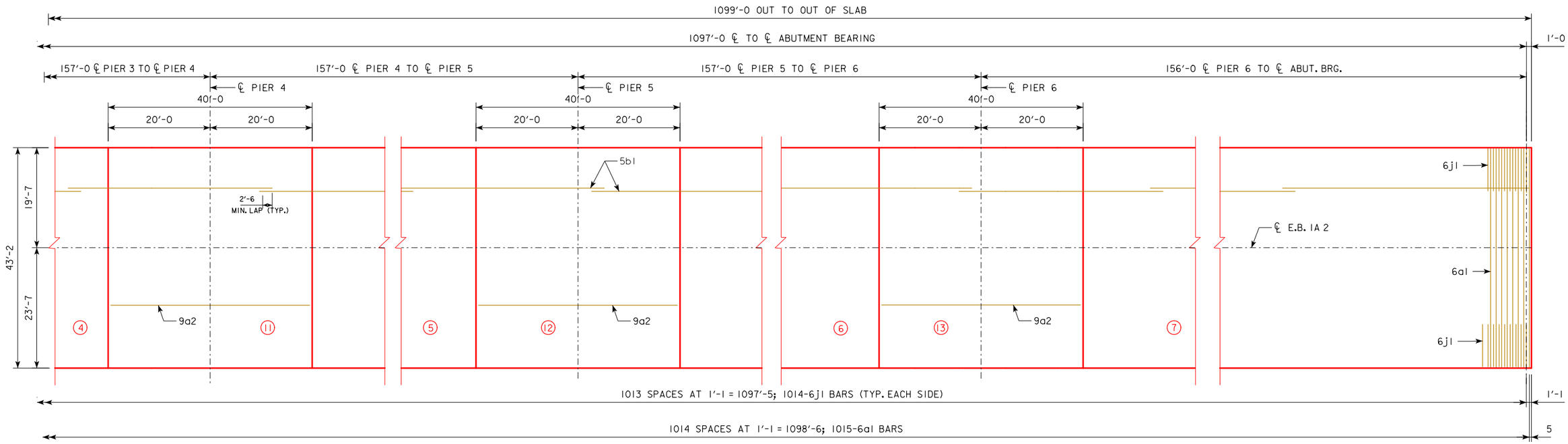

TOP SLAB REINFORCING LAYOUT

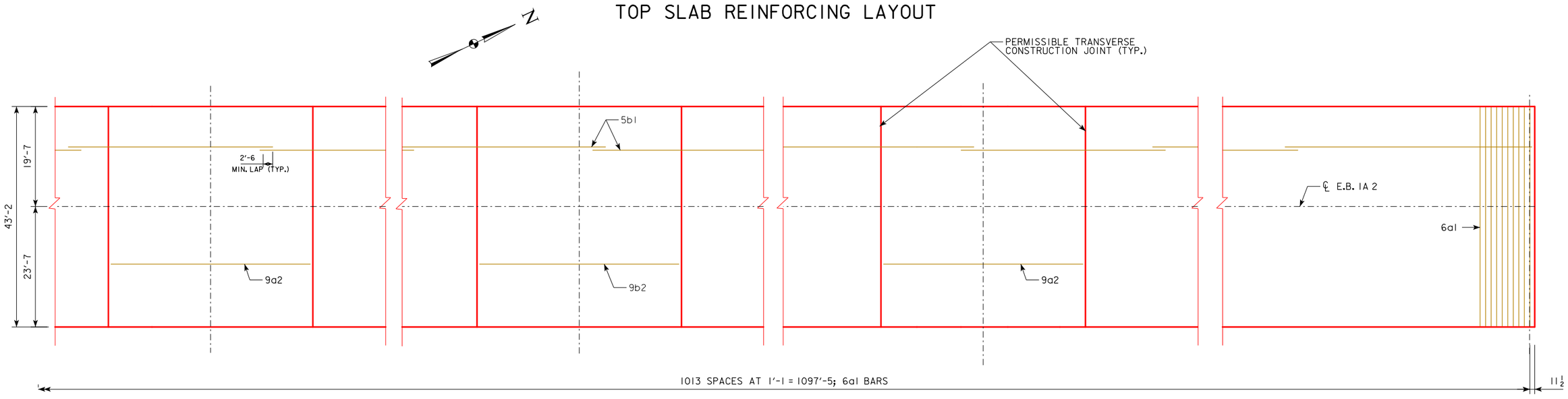

BOTTOM SLAB REINFORCING LAYOUT

PROGRESS PLANS
6/10/2019

NOTE: CONCRETE DECK SHALL BE PLACED IN SECTIONS AND SEQUENCES INDICATED. ALTERNATE PROCEDURES FOR PLACING DECK CONCRETE MAY BE SUBMITTED FOR APPROVAL TOGETHER WITH A STATEMENT OF PROPOSED METHOD AND EVIDENCE THAT THE CONTRACTOR POSSESSES THE NECESSARY EQUIPMENT AND FACILITIES TO ACCOMPLISH THE REQUIRED RESULTS. FOR APPROVED ALTERNATE PROCEDURES THE ENGINEER SHALL DETERMINE IF A RETARDING ADMIXTURE IS REQUIRED TO MAINTAIN PLASTICITY OF THE CONCRETE DECK DURING PLACEMENT.

DESIGN FOR 0° SKEW

1097'-0 X 40'-0 PRETENSIONED PRESTRESSED CONCRETE BEAM E.B. BRIDGE

156'-0 END SPANS — 157'-0 INTERIOR SPAN

SUPERSTRUCTURE DETAILS

IA 2 STA. 400+85.00, RT. 32.00' — JUNE 2019

FREMONT COUNTY

IOWA DEPARTMENT OF TRANSPORTATION - HIGHWAY DIVISION

DESIGN SHEET NO. 25 OF ? FILE NO. 31719 DESIGN NO. 119

REINFORCING BAR LIST - DECK (EPOXY)

EPOXY COATED REINFORCING

BAR	LOCATION	SHAPE	NO.	LENGTH	WEIGHT
6a1	DECK TRANSV.		2029	42'-10	130537
5b1	DECK LONGIT.		2280	40'-0	95122
9b2	DECK LONGIT. OVER PIERS		474	39'-0	62852
5d1	PIER DIAPH. ENDS		48	4'-7	229
5d2	PIER DIAPH. LONGIT.		240	6'-4	1585
5d3	PIER DIAPH. LONGIT.		60	4'-4	271
5d4	PIER DIAPH. LONGIT.		6	40'-6	253
6d5	ABUT. DIAPH.		4	36'-4	218
6d6	ABUT. DIAPH. LONGIT.		40	6'-4	381
5e1	PIER DIAPH. HOOPS		50	13'-11	726
5e2	PIER DIAPH. TIES ENDS		12	2'-9	34
5e3	PIER DIAPH. TIES		125	3'-0	391
5e4	PIER DIAPH. HOOPS ENDS		4	13'-8	57
5e5	ABUT. DIAPH. HOOPS		50	7'-5	387
5e6	EXPAN. PIER DIAPH. HOOPS		100	13'-9	1434
5e7	EXPAN. PIER DIAPH. HOOPS ENDS		8	13'-6	113
6j1	DECK TRANSV. TOP (AT RAIL)		2046	6'-3	19207
	REINFORCING STEEL EPOXY COATED - TOTAL (LBS.)				313797

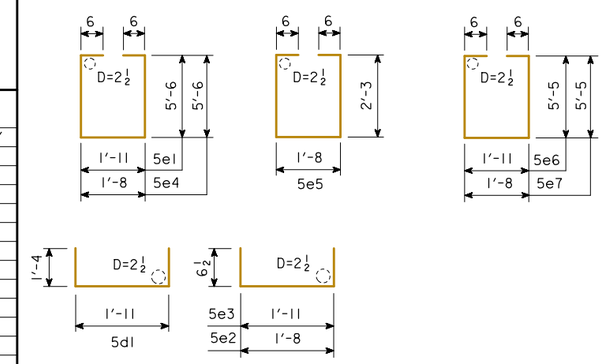

NOTE: ALL DIMENSIONS ARE OUT TO OUT. D= PIN DIAMETER.

BENT BAR DETAILS

CONCRETE PLACEMENT QUANTITIES

LOCATION	QUANTITY
SECTION 1, DECK & ABUT. DIAPH.	151.8
SECTION 2, DECK	124.7
SECTION 3, DECK	124.7
SECTION 4, DECK	124.7
SECTION 5, DECK	124.7
SECTION 6, DECK	124.7
SECTION 7, DECK & ABUT. DIAPH.	151.8
SECTION 8, DECK & PIER DIAPH.	59.6
SECTION 9, DECK & PIER DIAPH.	59.6
SECTION 10, DECK & PIER DIAPH.	59.6
SECTION 11, DECK & PIER DIAPH.	59.6
SECTION 12, DECK & PIER DIAPH.	59.6
SECTION 13, DECK & PIER DIAPH.	59.6
TOTAL (CU. YDS.)	1284.7

NOTE:
CONCRETE AND REINFORCING STEEL QUANTITIES ARE INCLUDED ON THE SUMMARY QUANTITIES SHEET.

CONCRETE PLACEMENT DIAGRAM

NOTE: CONCRETE DECK SHALL BE PLACED IN SECTIONS AND SEQUENCES INDICATED. ALTERNATE PROCEDURES FOR PLACING DECK CONCRETE MAY BE SUBMITTED FOR APPROVAL TOGETHER WITH A STATEMENT OF THE PROPOSED METHOD AND EVIDENCE THAT THE CONTRACTOR POSSESSES THE NECESSARY EQUIPMENT AND FACILITIES TO ACCOMPLISH THE REQUIRED RESULTS. FOR APPROVED ALTERNATE PROCEDURES THE ENGINEER SHALL DETERMINE IF A RETARDING ADMIXTURE IS REQUIRED TO MAINTAIN PLASTICITY OF THE CONCRETE DECK DURING PLACEMENT.

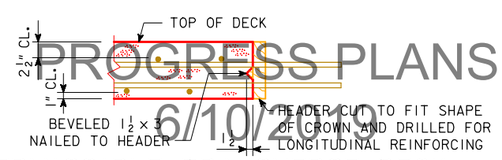

PROGRESS PLANS
6/10/2019

PERMISSIBLE TRANSVERSE DECK CONSTRUCTION JOINT

DESIGN FOR 0° SKEW

1097'-0 X 40'-0 PRETENSIONED PRESTRESSED CONCRETE BEAM E.B. BRIDGE

156'-0 END SPANS — 157'-0 INTERIOR SPAN

SUPERSTRUCTURE QUANTITIES & BAR LIST

IA 2 STA. 400+85.00, RT. 32.00' — JUNE 2019

FREMONT COUNTY

IOWA DEPARTMENT OF TRANSPORTATION - HIGHWAY DIVISION

DESIGN SHEET NO. 26 OF ? FILE NO. 31719 DESIGN NO. 119

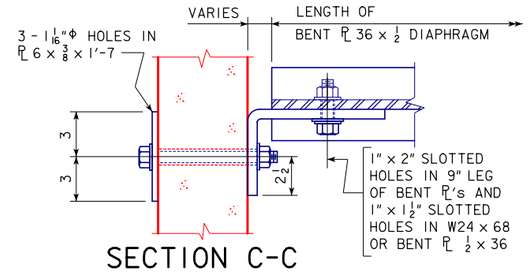

SECTION C-C

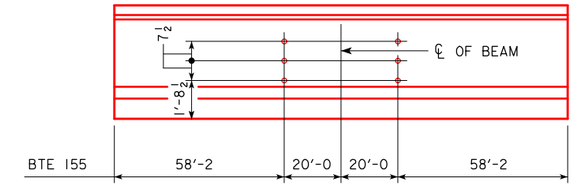

INTERMEDIATE DIAPHRAGM
BOLT HOLE LOCATIONS

NOTES:

ALL DIAPHRAGM MATERIALS, INCLUDING BOLTS, NUTS AND WASHERS SHALL BE GALVANIZED.

SHOP DRAWINGS OF THE STEEL DIAPHRAGMS SHOWING LAYOUT AND DETAILS OF THE DIAPHRAGMS SHALL BE SUBMITTED FOR APPROVAL.

ALL COSTS FOR FURNISHING AND INSTALLING STEEL INTERMEDIATE DIAPHRAGMS SHALL BE INCLUDED IN THE PRICE BID FOR STRUCTURAL STEEL.

THE $1\frac{1}{2}$"Φ HOLES FOR THE $\frac{7}{8}$"Φ H.S. BOLTS SHALL BE CAST INTO THE WEB. DRILLING IS NOT ALLOWED.

THE $\frac{7}{8}$"Φ H.S. BOLTS THROUGH THE WEB SHALL HAVE A THREAD LENGTH OF 3" MIN. AND 4" MAX. AND SHALL MEET THE REQUIREMENTS OF ASTM A449.

ALL BOLTS ARE TO BE TIGHTENED PRIOR TO PLACING BRIDGE FLOOR CONCRETE.

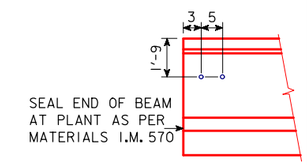

NOTE: STRUCTURAL STEEL WEIGHT IS INCLUDED ON THE SUMMARY QUANTITIES SHEET.

ALL SKEWS

STUB ABUT.

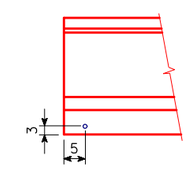

FIXED PIER

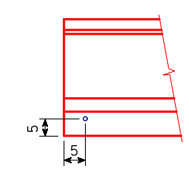

EXPANSION PIER

BEAM COIL TIE LOCATIONS

BULB TEE "E" BEAM INTERMEDIATE DIAPHRAGM STRUCTURAL STEEL

ONE BEAM CONNECTION (DETAIL "F" AND/OR DETAIL "G")			WEIGHT
		NO. OF BEAM CONNECTIONS	
3 - $\frac{7}{8}$"Φ x $9\frac{1}{4}$" H.S. BOLTS WITH NUTS & WASHERS = 7.2 LBS.		84	605.0
ONE DETAIL "G"	2 - BENT PL 9 x 6 x $\frac{1}{2}$ x 1'-7 = 80.8 LBS.	56	4,524.8
ONE DETAIL "F"	1 - BACKING PL 6 x $\frac{3}{8}$ x 1'-7 = 12.1 LBS.	28	338.8
	1 - BENT PL 9 x 6 x $\frac{1}{2}$ x 1'-7 = 40.4 LBS.	28	1,131.2
ONE DIAPHRAGM			
		NUMBER OF DIAPHRAGMS	
10 - $\frac{7}{8}$"Φ x $2\frac{1}{4}$" H.S.BOLTS WITH NUTS & WASHERS = 9.7 LBS.		70	679.0
	LENGTH OF MEMBER		
1 - BENT PL 36 x $\frac{1}{2}$ = 61.3 LBS./FT.	6'-$0\frac{9}{16}$	70	25,947.1
INTERMEDIATE DIAPHRAGM STRUCTURAL STEEL - TOTAL (LBS.)			33,225.9

PROGRESS PLANS
6/10/2019

DESIGN FOR 0° SKEW

1097'-0 X 40'-0 PRETENSIONED PRESTRESSED CONCRETE BEAM E.B. BRIDGE

156'-0 END SPANS 157'-0 INTERIOR SPAN

INTERMEDIATE DIAPHRAGMS

IA 2 STA. 400+85.00, RT. 32.00' JUNE 2019

FREMONT COUNTY

IOWA DEPARTMENT OF TRANSPORTATION - HIGHWAY DIVISION

DESIGN SHEET NO. 27 OF 2 FILE NO. 31719 DESIGN NO. 119

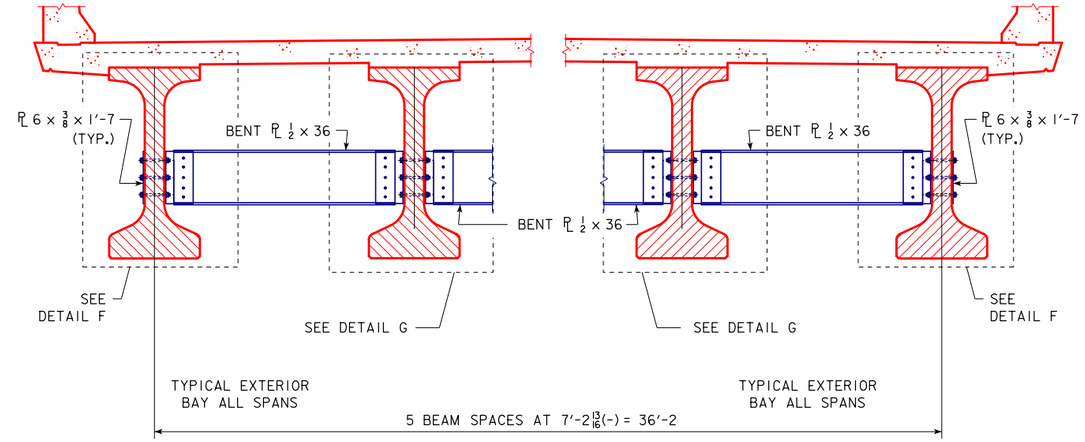

SECTION SHOWING INTERMEDIATE DIAPHRAGM

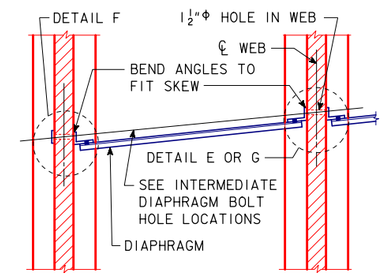

PART SECTION A-A

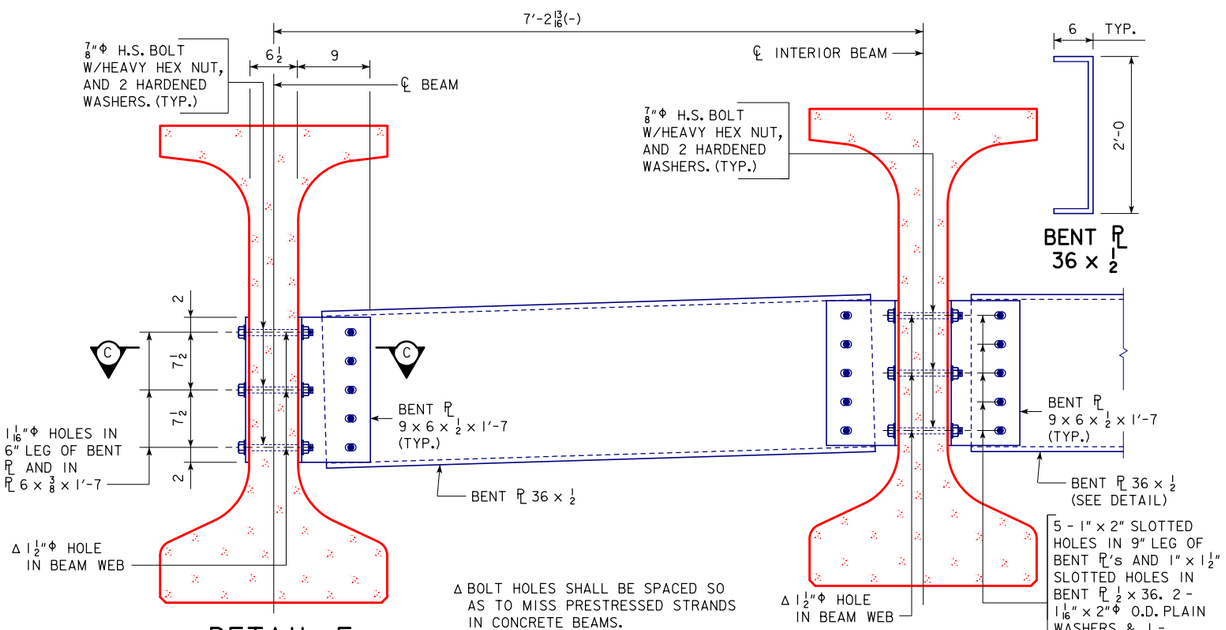

DETAIL F

DETAIL G

SECTION SHOWING INTERMEDIATE DIAPHRAGMS AT EXTERIOR BAY OVER NON-TRAVELED ROADWAY SPANS AND WATERWAYS

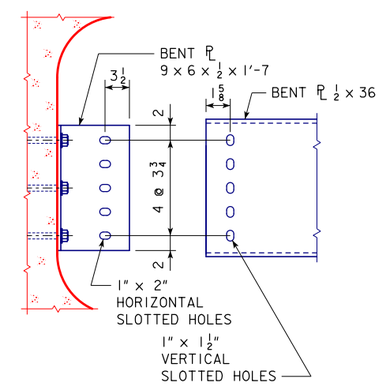

SLOTTED HOLE DETAILS

PROGRESS PLANS
6/10/2019

DESIGN FOR 0° SKEW

1097'-0 X 40'-0 PRETENSIONED PRESTRESSED CONCRETE BEAM E.B. BRIDGE

156'-0 END SPANS 157'-0 INTERIOR SPAN

INTERMEDIATE DIAPHRAGMS

IA 2 STA. 400+85.00, RT. 32.00' JUNE 2019

FREMONT COUNTY

IOWA DEPARTMENT OF TRANSPORTATION - HIGHWAY DIVISION

DESIGN SHEET NO. 28 OF ? FILE NO. 31719 DESIGN NO. 119

DESIGN TEAM Stanley Consultants Inc.	STEEL INTERM. DIAPHS. FOR "BTE" BEAM BRIDGES - SHT. 2 OF 2	STANDARD SHEET 1036-2-BTE	FREMONT COUNTY	PROJECT NUMBER NHSX-002-1(123)--3H-36	SHEET NUMBER 29

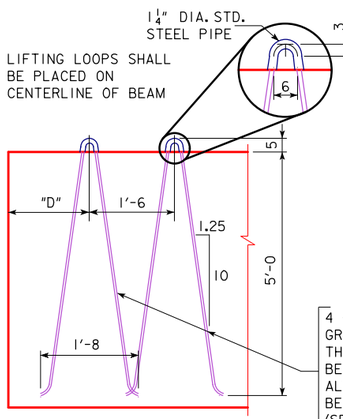

TYPICAL AT EACH END OF BEAM

LIFTING LOOP DETAIL

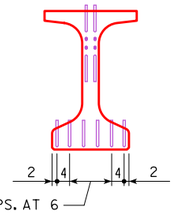

THE TOP AND BOTTOM ROWS OF THE DEFLECTED STRANDS ARE TO BE CUT WITH 1'-6 PROJECTIONS WHICH ARE TO BE SHOP BENT AS SHOWN. THE REMAINING TOP DEFLECTED STRANDS ARE TO BE CUT WITH 5" PROJECTIONS.
SIX BOTTOM STRANDS ARE TO BE CUT WITH 1'-6 PROJECTIONS WHICH ARE TO BE SHOP BENT AS SHOWN. THE REMAINING BOTTOM STRANDS ARE TO BE CUT OFF REASONABLY FLUSH WITH THE CONCRETE.

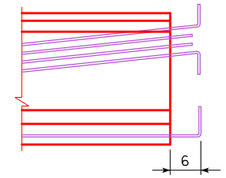

TYPICAL AT BOTH BEAM ENDS

STRAND PROJECTION AT BEAM ENDS WHEN EMBEDDED IN CONCRETE END DIAPHRAGMS

BTE BEAM DATA

	BTE BEAM	SPAN LENGTH ℄-℄ BEARING	OVERALL BEAM LENGTH (L)	CONCRETE STRENGTH f'ci (ksi)	CONCRETE STRENGTH f'c (ksi)	STRAND SIZE DIA. (in)	NO. OF STRAND STRAIGHT	NO. OF STRAND DEFLECTED	TOTAL INITIAL PRESTRESS ③ kips	HOLD DOWN FORCE-kips	CAMBER (in) AT RELEASE	CAMBER (in) AFTER LOSSES	DEFLECTION (in) Δ_D IMMEDIATE ① (ELASTIC) Δ_I STEEL DIAPHRAGM	DEFLECTION (in) Δ_D TIME ② (PLASTIC) Δ_T STEEL DIAPHRAGM	PERMISSIBLE MAXIMUM SPACING HL-93 LOADING STEEL DIAPHRAGM	WEIGHT (TONS)	CONCRETE (CU YD.)	REINFORCING STEEL (WEIGHT-LBS)
④	BTE155	155'-0	156'-4	8.00	9.00	0.60	46	12	2468	32.6	3.72	6.50	4.36	1.09	8'-0 1/2	65.8	32.5	4318

① DEFLECTIONS AT MID-SPAN DUE TO WEIGHT OF SLAB AND DIAPHRAGM. THE DEFLECTIONS SHOWN ARE FOR A SLAB (8 in) AND HAUNCH (1.5 in) WEIGHT OF:
0.85 kips/ft FOR 8'-0 BEAM SPACING AND TWO STEEL DIAPHRAGMS (0.500 kips) PLACED 20'-0, ON EITHER SIDE, OF THE BEAM CENTERLINE. FOR DIFFERENT SLAB AND DIAPHRAGM WEIGHTS, DEFLECTIONS WILL BE DIRECTLY PROPORTIONAL.

② DEFLECTIONS DUE TO THE COMBINED EFFECT OF CREEP DUE TO WEIGHT OF SLAB AND SHRINKAGE OF SLAB.
TOTAL BEAM DEFLECTIONS AT ℄ OF SPAN, Δ_D, DUE TO WEIGHT OF SLAB AND DIAPHRAGMS FOR DETAILING PURPOSE:
(A) $\Delta_D = \Delta_I + \Delta_T$ FOR SIMPLE SPAN.
(B) $\Delta_D = \Delta_I + \frac{3}{4}\Delta_T$ FOR END SPANS OF CONTINUOUS BRIDGE.
(C) $\Delta_D = \Delta_I + \frac{1}{2}\Delta_T$ FOR INTERIOR SPANS OF CONTINUOUS BRIDGE.

③ TOTAL INITIAL PRESTRESS IS BASED ON 72.6% f's, f's. = 270 ksi. AND As = 0.217 in².

④ REQUIRES A 4000 psi, 28 DAY COMPRESSIVE STRENGTH FOR CAST-IN-PLACE SLAB CONCRETE.

CALCULATED DESIGN CAMBERS HAVE BEEN REDUCED FROM THEIR THEORETICAL VALUES BY 15% TO AID CONSTRUCTABILITY.

BEAM NOTES:

THIS BEAMS IS DESIGNED FOR AASHTO LIVE LOADS AS INDICATED IN ABOVE TABLE WITH AN ALLOWANCE OF 20 LBS PER SQUARE FOOT OF ROADWAY FOR FUTURE WEARING SURFACE.
ALL PPC BEAMS SHALL USE HIGH PERFORMANCE CONCRETE (HPC) IN ACCORDANCE WITH THE STANDARD SPECIFICATIONS.
HOLD DOWN POINTS FOR DEFLECTED STRANDS MAY BE MOVED TOWARD ENDS OF BEAM A DISTANCE OF 0.05 L MAXIMUM AT PRODUCER'S OPTION.
ALL PRESTRESSING STRANDS EXCEPT LIFTING LOOP STRANDS SHALL BE 0.60 in. NOMINAL DIAMETER (NOMINAL STEEL AREA = 0.217 in²) AND CONFORM TO ASTM A416 GRADE 270 LOW RELAXATION STRANDS. MINIMUM STRAND BREAKING STRENGTH SHALL BE 58.6 kips.
TOPS OF BEAMS ARE TO BE STRUCK OFF LEVEL AND FINISHED AS PER MATERIALS IM570.
BEARINGS SHALL BE AS DETAILED ON OTHER DESIGN SHEETS.
BEAMS TO BE USED IN BRIDGES MADE CONTINUOUS BY THE POURED IN PLACE FLOOR, ARE TO BE AT LEAST 28 DAYS OLD BEFORE THE FLOOR IS PLACED UNLESS A SHORTER CURING TIME IS APPROVED BY THE BRIDGE ENGINEER.
THE PORTIONS OF THE PRESTRESSED BEAMS THAT ARE TO BE EMBEDDED IN THE ABUTMENT AND PIER DIAPHRAGMS SHALL BE ROUGHENED FOR A DISTANCE OF 10" FROM THE BEAM END BY SANDBLASTING OR OTHER APPROVED METHODS TO PROVIDE SUITABLE BOND BETWEEN THE BEAM AND THE DIAPHRAGM IN ACCORDANCE WITH ARTICLE 2403.03, 1, OF THE STANDARD SPECIFICATIONS.
ALL BEAMS ARE TO BE INCREASED IN LENGTH TO COMPENSATE FOR ELASTIC SHORTENING, CREEP AND SHRINKAGE.
FOR TRANSPORTING, THE ALLOWABLE OVERHANG IS SHOWN IN THE LIFTING LOOP AND OVERHANG TABLE.
THE CONTRACTOR SHALL ASSURE THE LATERAL STABILITY OF THE BEAMS DURING HANDLING, TRANSPORTING AND ERECTION BY PROVIDING TEMPORARY BRACING AS NEEDED.
HOLES MUST BE CAST IN THE WEB TO ACCOMMODATE THE STEEL DIAPHRAGM ATTACHMENTS AS DETAILED ON THE STEEL DIAPHRAGM DETAIL SHEET.
IF SOLE PLATE IS REQUIRED FOR BEARING, SOLE PLATE IS TO BE SET IN FORMS WHEN BEAM IS CAST AND FORMED OUT BELOW TO EXCLUDE CONCRETE AS DETAILED ON THE BEARING SHEET.
IF STUB ABUTMENTS ARE USED, ALL STRANDS AT THE ENDS OF BEAMS AT STUB ABUTMENTS SHALL BE CUT OFF REASONABLY FLUSH WITH THE CONCRETE.
WHEN EXPANSION JOINTS ARE USED, CONCRETE SEALER SHALL BE APPLIED TO THE PRESTRESSED BEAM END SECTIONS. THE SEALING SHALL BE IN ACCORDANCE WITH MATERIALS I.M. 570 (FABRICATOR APPLICATION) AND I.M. 491.12 (CONTRACTOR APPLICATION).
MINIMUM CONCRETE f'c (AT 28 DAYS) AND MINIMUM f'ci AT RELEASE ARE LOCATED IN THE BTE BEAM DATA TABLE ABOVE.
FOUR 0.60 IN. DIAMETER STRANDS STRESSED TO NOT MORE THAN 5000 lbs. EACH MAY BE USED IN LIEU OF BARS 5a1 AND 5a2 IN THE TOP FLANGE.

DESIGN STRESSES:

DESIGN STRESSES FOR THE FOLLOWING MATERIALS ARE TO BE IN ACCORDANCE WITH AASHTO LRFD BRIDGE DESIGN SPECIFICATIONS FOR HIGHWAY BRIDGES, SERIES OF 2007.
REINFORCING STEEL IN ACCORDANCE WITH SECTION 5, GRADE 60.
CONCRETE IN ACCORDANCE WITH SECTION 5.
PRESTRESSING STEEL IN ACCORDANCE WITH SECTION 5, GRADE 270.

SPECIFICATIONS:

CONSTRUCTION: STANDARD SPECIFICATIONS OF THE IOWA DEPARTMENT OF TRANSPORTATION, CURRENT SERIES, WITH CURRENT APPLICABLE SPECIAL PROVISIONS AND SUPPLEMENTAL SPECIFICATIONS.
DESIGN: A.A.S.H.T.O. LRFD, SERIES OF 2007, WITH MINOR MODIFICATIONS.

NOTES:
MODIFIED STIRRUP EXTENSIONS FOR 6b3 BARS

LIFTING LOOP AND OVERHANG TABLE

BEAMS	LIFTING LOOPS EACH END	# OF STRANDS PER LOOP	D	BEAM OVERHANG (FT)
BTE155	2	4	13'-6	16

LIFTING LOOPS SHALL CARRY LOADS EQUALLY.

NUMBER AND EXACT LOCATION OF COIL TIES TO BE AS DETAILED ON SPECIFIC BRIDGE DESIGN.

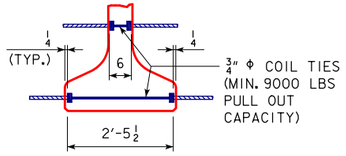

COIL TIE DETAIL

ALTERNATE BAR NOTES:

ALTERNATE BARS SHOWN IN BENT BAR DETAILS MAY BE USED IN LIEU OF REINFORCING BARS SHOWN IN BAR LIST. NO ADDITIONAL PAYMENT SHALL BE MADE FOR USE OF ALTERNATE BARS.

ΔΔ 5b1 AND 6b3 BARS TO BE EPOXY COATED
* 6b3 AND 6b4 BARS TO BE USED IN PAIRS

REINFORCING BAR LIST

	BEAM		BTE155	
	BAR	SHAPE	NO.	LENGTH
	5a1		12	22'-6
	5a2		18	40'-0
ΔΔ	5b1		119	12'-2
ΔΔ *	6b3		52	6'-7
*	6b4		20	5'-10
	4c1		189	2'-7
	4d1		151	6'-5
	4e1		36	3'-2
	4h1		8	8'-0

BENT BAR DETAILS

NOTE: ALL BAR DIMENSIONS ARE OUT TO OUT
D = PIN DIAMETER FOR BENDING (UNLESS OTHERWISE SHOWN)
#4 BAR D= 2"
#5 BAR D= 2 1/2"
#6 BAR D= 4 1/2"

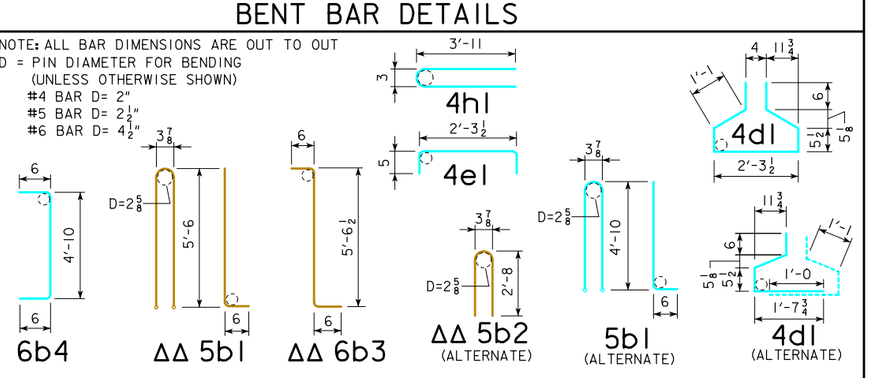

PROGRESS PLANS
6/10/2019

DESIGN FOR 0° SKEW
1097'-0 X 40'-0 PRETENSIONED PRESTRESSED CONCRETE BEAM E.B. BRIDGE
156'-0 END SPANS 157'-0 INTERIOR SPAN
BTE155 BEAM DETAILS
IA 2 STA. 400+85.00, RT. 32.00' JUNE 2019
FREMONT COUNTY
IOWA DEPARTMENT OF TRANSPORTATION - HIGHWAY DIVISION
DESIGN SHEET NO. 29 OF ? FILE NO. 31719 DESIGN NO. 119

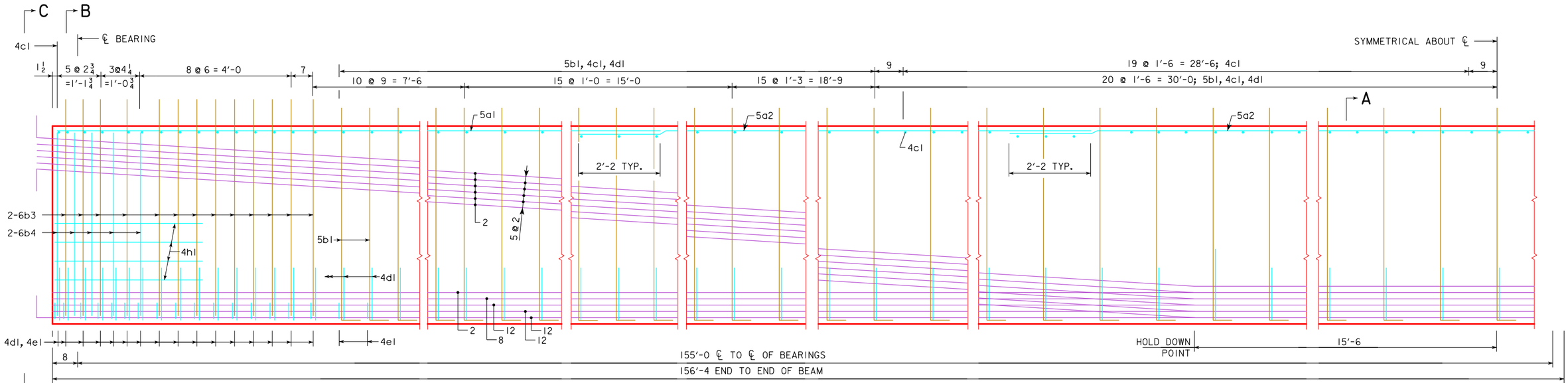

BTE155

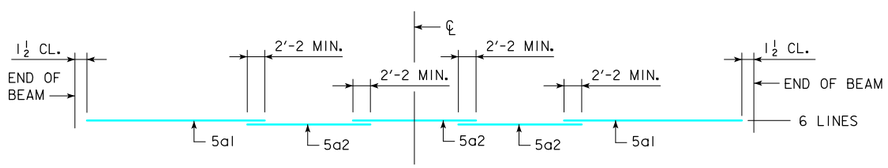

TOP FLANGE LONGITUDINAL BAR LAYOUT

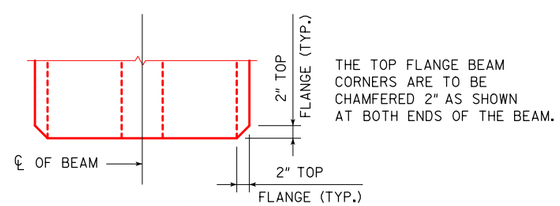

TOP VIEW

THE TOP FLANGE BEAM CORNERS ARE TO BE CHAMFERED 2" AS SHOWN AT BOTH ENDS OF THE BEAM.

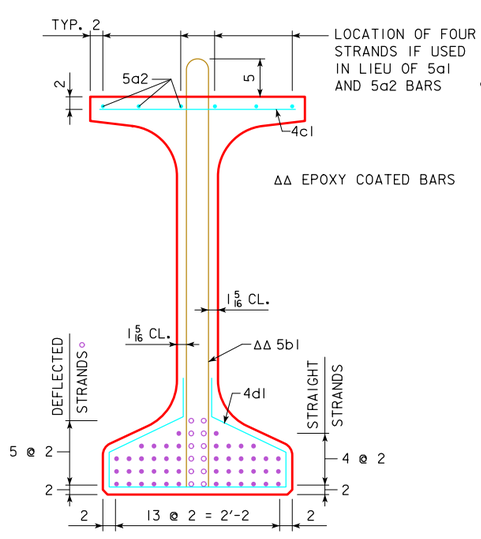

SECTION A-A

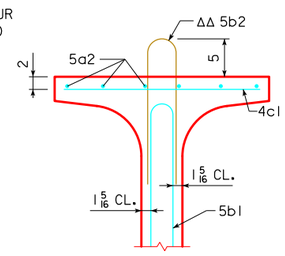

SECTION A-A (ALTERNATE)

SEE ALTERNATE BAR NOTE ON STANDARD SHEET 4790 (SHEET 1).

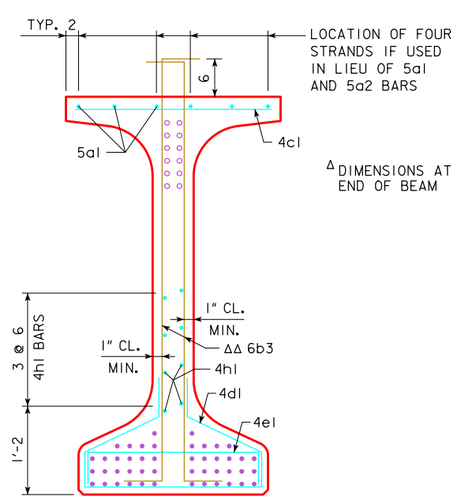

SECTION B-B

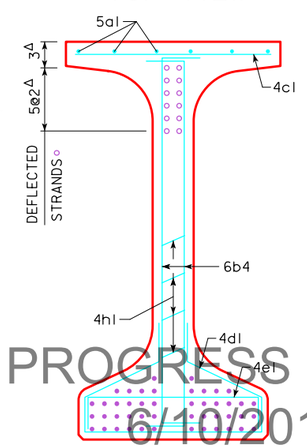

SECTION C-C

AREA = 807.4 in²
$\bar{y}_b$ = 28.75 in
I = 422,790 in⁴

BEAM SECTION PROPERTIES

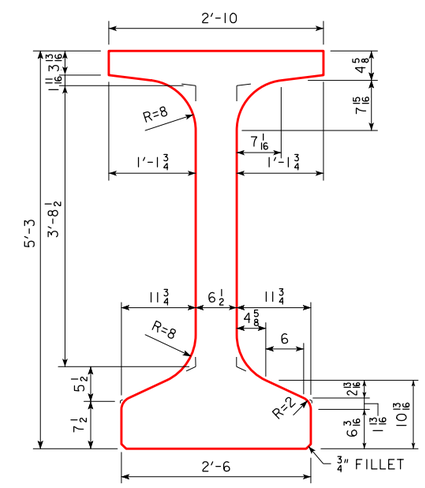

BTE BEAM CROSS SECTION

PROGRESS PLANS
6/10/2019

DESIGN FOR 0° SKEW

1097'-0 X 40'-0 PRETENSIONED PRESTRESSED CONCRETE BEAM E.B. BRIDGE

156'-0 END SPANS 157'-0 INTERIOR SPAN

BTE155 BEAM DETAILS

IA 2 STA. 400+85.00, RT. 32.00' JUNE 2019

FREMONT COUNTY

IOWA DEPARTMENT OF TRANSPORTATION - HIGHWAY DIVISION

DESIGN SHEET NO. 30 OF ? FILE NO. 31719 DESIGN NO. 119

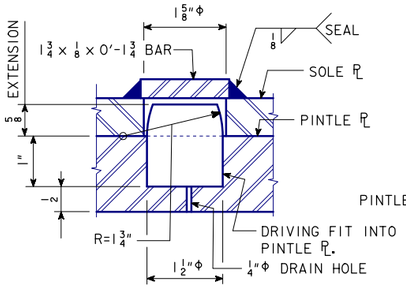

PINTLE DETAIL

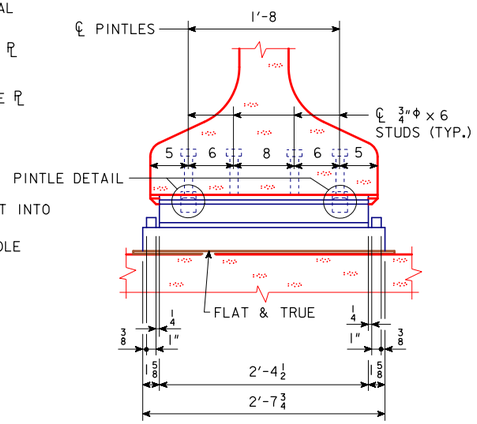

SECTION A-A

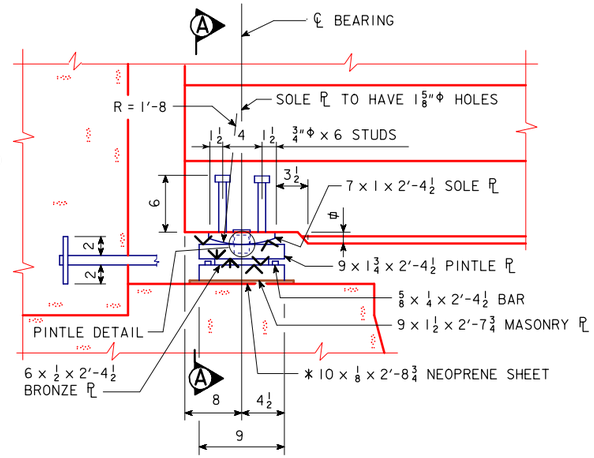

PART ELEVATION

Φ NOTCH BEAM END TO SOLE PL THICKNESS MAXIMUM 1"

ABUTMENT BEARING NOTES:

THE SLIDING SURFACE OF THE BRONZE PL SHALL BE LUBRICATED IN ACCORDANCE WITH ARTICLE 4190.03, OF THE STANDARD SPECIFICATIONS, AND THE BRONZE METAL SHALL BE CAST BRONZE IN ACCORDANCE WITH ARTICLE 4190.03, OF THE STANDARD SPECIFICATIONS. TOP EDGES OF BRONZE PL SHALL BE BEVELED 1/8".

SURFACES MARKED "V" SHALL BE FINISHED ANSI 250 AND SURFACES MARKED "⋁" SHALL BE FINISHED ANSI 125.

MASONRY PLATES ARE TO BE SET ON A 1/8" NEOPRENE SHEET.

PINTLE PLATES, MASONRY PLATES, AND LUBRICATED BRONZE PLATES ARE A PART OF THE SUPERSTRUCTURE STRUCTURAL STEEL QUANTITY. UNIT PRICE BID FOR STRUCTURAL STEEL SHALL INCLUDE ALLOWANCE FOR COST OF BRONZE PLATES. COST OF NEOPRENE SHEETS SHALL BE CONSIDERED INCIDENTAL TO THE STRUCTURAL STEEL BID ITEM. COST OF THE ANCHORED CURVED SOLE PLATES IS TO BE INCLUDED IN THE PRICE BID FOR PRETENSIONED PRESTRESSED CONCRETE BEAMS.

THE SOLE PLATE, PINTLE PLATE AND THE MASONRY PLATE SHALL BE GALVANIZED. THE SOLE PLATE AND MASONRY PLATE SHALL BE FITTED UP AND WELDED PRIOR TO GALVANIZING. THE SURFACE OF PINTLE PLATE IN CONTACT WITH BRONZE BEARING PLATE SHALL BE SMOOTH AND FREE OF PROJECTIONS DUE TO GALVANIZING.

SOLE PLATES ARE TO BE SET IN FORMS WHEN BEAMS ARE CAST AND THE BOTTOM OF BEAMS FORMED OUT AS SHOWN TO EXCLUDE CONCRETE.

SOLE PLATES SHALL COMPLY WITH ONE OF THE FOLLOWING SPECIFICATIONS :

ASTM A514 GRADE B
ASTM A709 GRADE HPS 70W

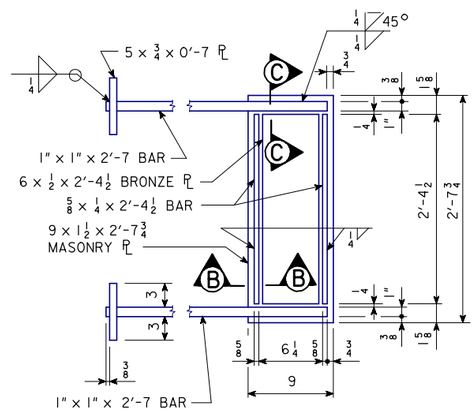

PLAN OF MASONRY PL AND BRONZE PL

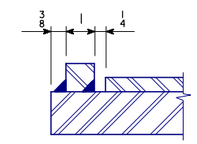

SECTION C-C

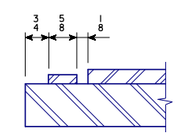

SECTION B-B

DESIGN NOTE:

1. TOTAL VERTICAL DESIGN LOAD (DC + DW + LL + IM) AT SERVICE LIMIT STATE = 300 k
2. BEARINGS AS DESIGNED WILL ALLOW UP TO 1.5 INCHES OF MOVEMENT EACH WAY OF CENTERLINE OF BEARING.

PRETENSIONED PRESTRESSED CONCRETE BEAM ABUTMENT BEARING DETAILS
(BTB, BTC, BTD & BTE BEAMS)

* THE 1/8 INCH NEOPRENE SHEETS ARE TO BE 50, 60, OR 70 DUROMETER HARDNESS AND SHALL BE 1 INCH GREATER IN LENGTH AND WIDTH THAN THE BOTTOM SURFACE OF THE MASONRY PLATES OR STEEL BEARINGS.

MASONRY PL / BRONZE BEARING ASSEMBLY

STRUCTURAL STEEL	
WEIGHT	LBS.

DOES NOT INCLUDE CURVED SOLE PL

NOTE: STRUCTURAL STEEL WEIGHT IS INCLUDED ON THE SUMMARY QUANTITIES SHEET.

PROGRESS PLANS
6/10/2019

DESIGN FOR 0° SKEW

1097'-0 X 40'-0 PRETENSIONED PRESTRESSED CONCRETE BEAM E.B. BRIDGE

156'-0 END SPANS 157'-0 INTERIOR SPAN

ABUTMENT BEARING DETAILS

IA 2 STA. 400+85.00, RT. 32.00' JUNE 2019

FREMONT COUNTY

IOWA DEPARTMENT OF TRANSPORTATION - HIGHWAY DIVISION

DESIGN SHEET NO. 31 OF 7 FILE NO. 31719 DESIGN NO. 119

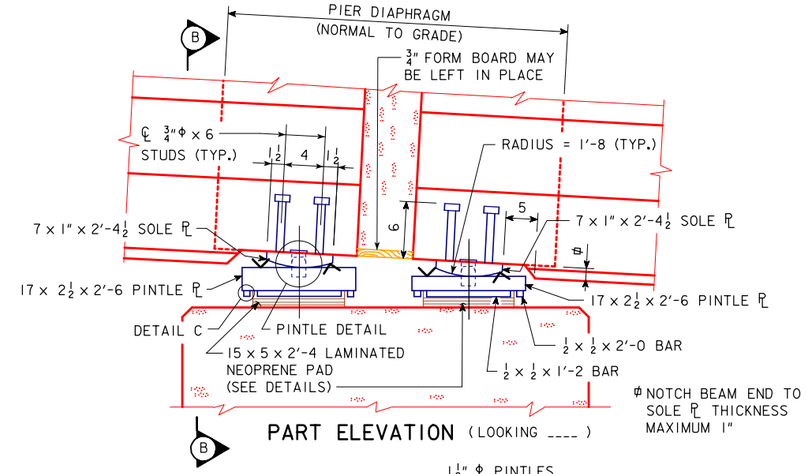

PART ELEVATION (LOOKING ____)

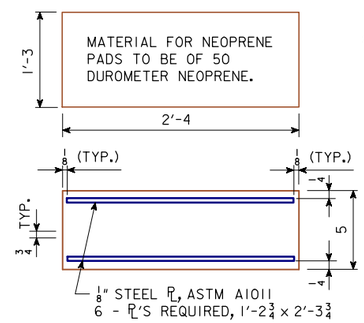

LAMINATED NEOPRENE PAD

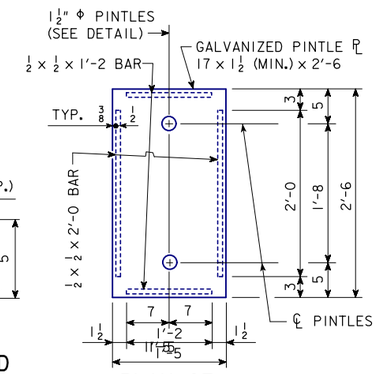

PLAN OF PINTLE PLATE

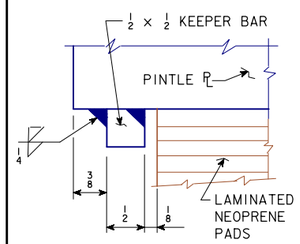

DETAIL C

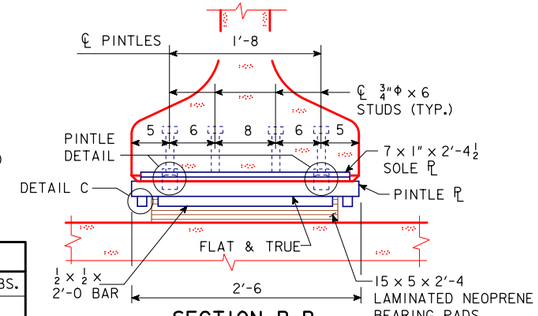

SECTION B-B
(DIAPHRAGM CONCRETE NOT SHOWN)

STRUCTURAL STEEL	
WEIGHT	17,612.8 LBS.

DOES NOT INCLUDE CURVED SOLE PL

EXPANSION PIER BEARING NOTES:

SURFACES MARKED "V" SHALL BE FINISHED ANSI 250.

PINTLE PLATES ARE A PART OF THE SUPERSTRUCTURE STRUCTURAL STEEL QUANTITY.

COST OF ANCHORED CURVED SOLE PLATES IS TO BE INCLUDED IN THE PRICE BID FOR PRETENSIONED PRESTRESSED CONCRETE BEAMS. COST FOR NEOPRENE PADS SHALL BE CONSIDERED INCIDENTAL TO THE PRETENSIONED PRESTRESSED CONCRETE BEAM BID ITEM.

THE SOLE PLATES AND PINTLE PLATES SHALL BE GALVANIZED. ALL WELDING SHALL BE COMPLETED PRIOR TO GALVANIZING. THE SURFACE OF THE PINTLE PLATE IN CONTACT WITH THE LAMINATED NEOPRENE PADS SHALL BE FREE OF PROJECTIONS DUE TO THE GALVANIZING.

SOLE PLATES ARE TO BE SET IN FORMS WHEN BEAMS ARE CAST AND THE BOTTOM OF BEAMS FORMED OUT AS SHOWN TO EXCLUDE CONCRETE.

SOLE PLATES SHALL COMPLY WITH ONE OF THE FOLLOWING :

ASTM A514 GRADE B

ASTM A709 GRADE HPS 70W

EXPANSION PIER

LAMINATED NEOPRENE PAD / CURVED SOLE PL ASSEMBLY

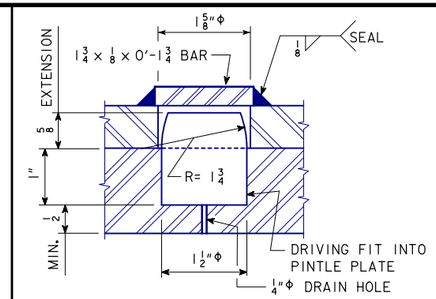

PINTLE DETAIL

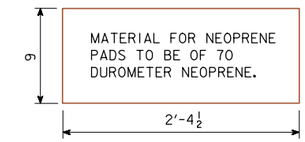

NOTE:
COST OF NEOPRENE PADS SHALL BE INCLUDED IN THE PRICE BID FOR "PRETENSIONED PRESTRESSED CONCRETE BEAMS".

FIXED PIER

PLAIN NEOPRENE PAD

* THE 1/8 INCH NEOPRENE SHEETS ARE TO BE 50, 60, OR 70 DUROMETER HARDNESS AND SHALL BE 1 INCH GREATER IN LENGTH THAN THE BOTTOM SURFACE OF THE MASONRY PLATES OR STEEL BEARINGS.

NOTE: STRUCTURAL STEEL WEIGHT IS INCLUDED ON THE SUMMARY QUANTITIES SHEET.

PRELIMINARY PLANS
6/10/2019

DESIGN FOR 0° SKEW

1097'-0 X 40'-0 PRETENSIONED PRESTRESSED CONCRETE BEAM E.B. BRIDGE

156'-0 END SPANS 157'-0 INTERIOR SPAN

PIER BEARING DETAILS

IA 2 STA. 400+85.00, RT. 32.00' JUNE 2019

FREMONT COUNTY

IOWA DEPARTMENT OF TRANSPORTATION - HIGHWAY DIVISION

DESIGN SHEET NO. 32 OF 2 FILE NO. 31719 DESIGN NO. 119

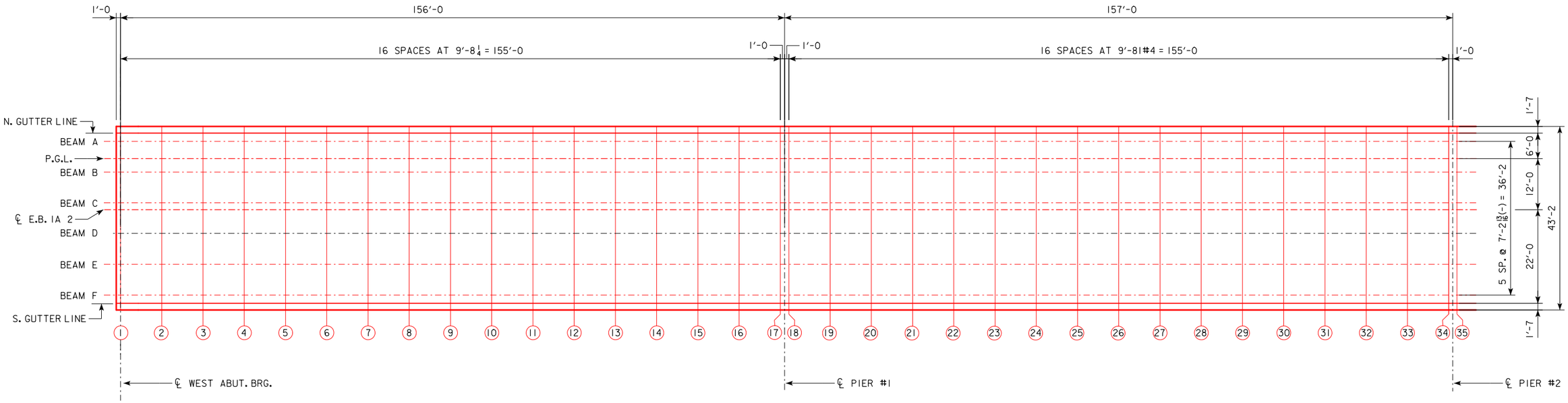

TOP OF SLAB PLAN (SPAN 1 & SPAN 2)

TOP OF SLAB ELEVATIONS

	℄ WEST ABUT.BRG.																℄ PIER #1 BEARING										
LOCATION	1	2	3	4	5	6	7	8	9	10	11	12	13	14	15	16	17	18	19	20	21	22	23	24	25	26	27
NORTH GUTTER LINE	945.21	945.25	945.30	945.35	945.40	945.45	945.50	945.54	945.59	945.64	945.69	945.74	945.79	945.83	945.88	945.93	945.98	945.99	946.04	946.09	946.14	946.18	946.23	946.28	946.33	946.38	946.43
BEAM A	945.24	945.29	945.34	945.39	945.44	945.49	945.53	945.58	945.63	945.68	945.73	945.78	945.82	945.87	945.92	945.97	946.02	946.03	946.08	946.13	946.17	946.22	946.27	946.32	946.37	946.42	946.46
BEAM B	945.39	945.44	945.48	945.53	945.58	945.63	945.68	945.73	945.78	945.82	945.87	945.92	945.97	946.02	946.07	946.11	946.16	946.17	946.22	946.27	946.32	946.37	946.42	946.46	946.51	946.56	946.61
BEAM C	945.53	945.57	945.62	945.67	945.72	945.77	945.82	945.86	945.91	945.96	946.01	946.06	946.11	946.16	946.20	946.25	946.30	946.31	946.36	946.41	946.46	946.50	946.55	946.60	946.65	946.70	946.75
℄ E.B. IA 2	945.54	945.58	945.63	945.68	945.73	945.78	945.83	945.88	945.92	945.97	946.02	946.07	946.12	946.17	946.21	946.26	946.31	946.32	946.37	946.42	946.47	946.52	946.56	946.61	946.66	946.71	946.76
BEAM D	945.45	945.50	945.55	945.60	945.65	945.69	945.74	945.79	945.84	945.89	945.94	945.99	946.03	946.08	946.13	946.18	946.23	946.24	946.29	946.33	946.38	946.43	946.48	946.53	946.58	946.63	946.67
BEAM E	945.31	945.36	945.40	945.45	945.50	945.55	945.60	945.65	945.70	945.74	945.79	945.84	945.89	945.94	945.99	946.03	946.08	946.09	946.14	946.19	946.24	946.29	946.34	946.38	946.43	946.48	946.53
BEAM F	945.16	945.21	945.26	945.31	945.36	945.41	945.45	945.50	945.55	945.60	945.65	945.70	945.74	945.79	945.84	945.89	945.94	945.95	946.00	946.05	946.09	946.14	946.19	946.24	946.29	946.34	946.38
SOUTH GUTTER LINE	945.12	945.17	945.22	945.27	945.32	945.37	945.42	945.46	945.51	945.56	945.61	945.66	945.71	945.75	945.80	945.85	945.90	945.91	945.96	946.01	946.06	946.10	946.15	946.20	946.25	946.30	946.35

TOP OF SLAB ELEVATIONS

							℄ PIER #2 BEARING
LOCATION	28	29	30	31	32	33	34
NORTH GUTTER LINE	946.47	946.52	946.57	946.62	946.67	946.72	946.77
BEAM A	946.51	946.56	946.61	946.66	946.71	946.75	946.80
BEAM B	946.66	946.71	946.75	946.80	946.85	946.90	946.95
BEAM C	946.80	946.84	946.89	946.94	946.99	947.04	947.09
℄ E.B. IA 2	946.81	946.85	946.90	946.95	947.00	947.05	947.10
BEAM D	946.72	946.77	946.82	946.87	946.92	946.96	947.01
BEAM E	946.58	946.63	946.67	946.72	946.77	946.82	946.87
BEAM F	946.43	946.48	946.53	946.58	946.63	946.67	946.72
SOUTH GUTTER LINE	946.39	946.44	946.49	946.54	946.59	946.64	946.68

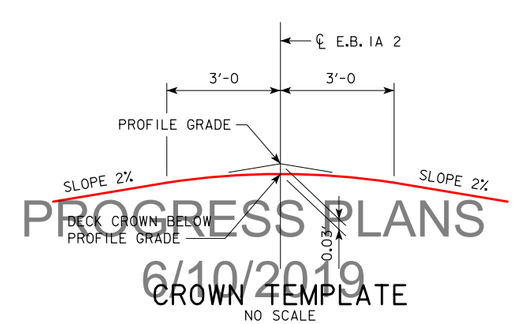

PROGRESS PLANS
6/10/2019

DESIGN FOR 0° SKEW

1097'-0 X 40'-0 PRETENSIONED PRESTRESSED CONCRETE BEAM E.B. BRIDGE

156'-0 END SPANS 157'-0 INTERIOR SPAN

TOP OF SLAB ELEVATIONS

IA 2 STA. 400+85.00, RT. 32.00' JUNE 2019

FREMONT COUNTY

IOWA DEPARTMENT OF TRANSPORTATION - HIGHWAY DIVISION

DESIGN SHEET NO. 33 OF ? FILE NO. 31719 DESIGN NO. 119

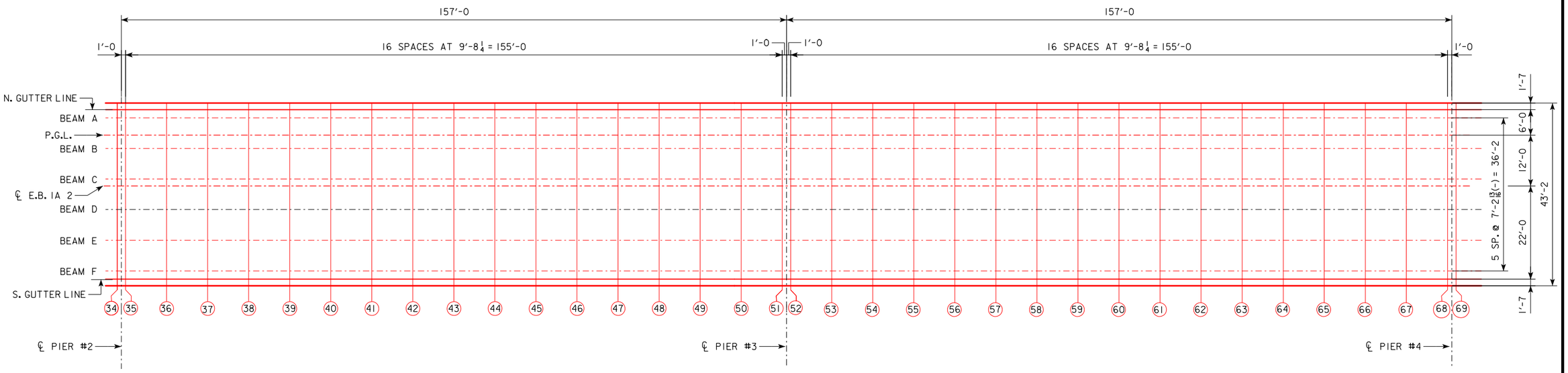

TOP OF SLAB PLAN (SPAN 3 & SPAN 4)

TOP OF SLAB ELEVATIONS

	℄ PIER #2 BEARING																℄ PIER #3 BEARING										
LOCATION	35	36	37	38	39	40	41	42	43	44	45	46	47	48	49	50	51	52	53	54	55	56	57	58	59	60	61
NORTH GUTTER LINE	946.78	946.82	946.87	946.92	946.97	947.02	947.07	947.11	947.16	947.21	947.26	947.31	947.36	947.40	947.45	947.50	947.55	947.56	947.61	947.65	947.70	947.74	947.78	947.81	947.85	947.88	947.91
BEAM A	946.81	946.86	946.91	946.96	947.01	947.06	947.10	947.15	947.20	947.25	947.30	947.35	947.39	947.44	947.49	947.54	947.59	947.60	947.65	947.69	947.74	947.78	947.82	947.85	947.89	947.92	947.95
BEAM B	946.96	947.01	947.05	947.10	947.15	947.20	947.25	947.30	947.35	947.39	947.44	947.49	947.54	947.59	947.64	947.68	947.73	947.74	947.79	947.84	947.88	947.92	947.96	948.00	948.03	948.06	948.09
BEAM C	947.10	947.14	947.19	947.24	947.29	947.34	947.39	947.43	947.48	947.53	947.58	947.63	947.68	947.73	947.77	947.82	947.87	947.88	947.93	947.97	948.02	948.06	948.10	948.13	948.17	948.20	948.23
℄ E.B. IA 2	947.11	947.15	947.20	947.25	947.30	947.35	947.40	947.45	947.49	947.54	947.59	947.64	947.69	947.74	947.78	947.83	947.88	947.89	947.94	947.99	948.03	948.07	948.11	948.15	948.18	948.21	948.24
BEAM D	947.02	947.07	947.12	947.17	947.22	947.26	947.31	947.36	947.41	947.46	947.51	947.56	947.60	947.65	947.70	947.75	947.80	947.81	947.86	947.90	947.95	947.99	948.03	948.06	948.10	948.13	948.16
BEAM E	946.88	946.93	946.97	947.02	947.07	947.12	947.17	947.22	947.27	947.31	947.36	947.41	947.46	947.51	947.56	947.60	947.65	947.66	947.71	947.76	947.80	947.84	947.88	947.92	947.95	947.98	948.01
BEAM F	946.73	946.78	946.83	946.88	946.93	946.98	947.02	947.07	947.12	947.17	947.22	947.27	947.31	947.36	947.41	947.46	947.51	947.52	947.57	947.61	947.66	947.70	947.74	947.77	947.81	947.84	947.87
SOUTH GUTTER LINE	946.69	946.74	946.79	946.84	946.89	946.94	946.99	947.03	947.08	947.13	947.18	947.23	947.28	947.32	947.37	947.42	947.47	947.48	947.53	947.57	947.62	947.66	947.70	947.73	947.77	947.80	947.83

TOP OF SLAB ELEVATIONS

							℄ PIER #4 BEARING
LOCATION	62	63	64	65	66	67	68
NORTH GUTTER LINE	947.94	947.96	947.98	948.00	948.02	948.04	948.05
BEAM A	947.97	948.00	948.02	948.04	948.06	948.08	948.09
BEAM B	948.12	948.14	948.17	948.19	948.20	948.22	948.23
BEAM C	948.26	948.28	948.30	948.32	948.34	948.36	948.37
℄ E.B. IA 2	948.27	948.29	948.31	948.34	948.35	948.37	948.38
BEAM D	948.18	948.21	948.23	948.25	948.27	948.28	948.30
BEAM E	948.04	948.06	948.09	948.11	948.12	948.14	948.15
BEAM F	947.89	947.92	947.94	947.96	947.98	948.00	948.01
SOUTH GUTTER LINE	947.86	947.88	947.90	947.92	947.94	947.96	947.97

PROGRESS PLANS
6/10/2019

DESIGN FOR 0° SKEW

1097'-0 X 40'-0 PRETENSIONED
PRESTRESSED CONCRETE BEAM E.B. BRIDGE

156'-0 END SPANS 157'-0 INTERIOR SPAN

TOP OF SLAB ELEVATIONS

IA 2 STA. 400+85.00, RT. 32.00' JUNE 2019

FREMONT COUNTY

IOWA DEPARTMENT OF TRANSPORTATION - HIGHWAY DIVISION

DESIGN SHEET NO. 34 OF 2 FILE NO. 31719 DESIGN NO. 119

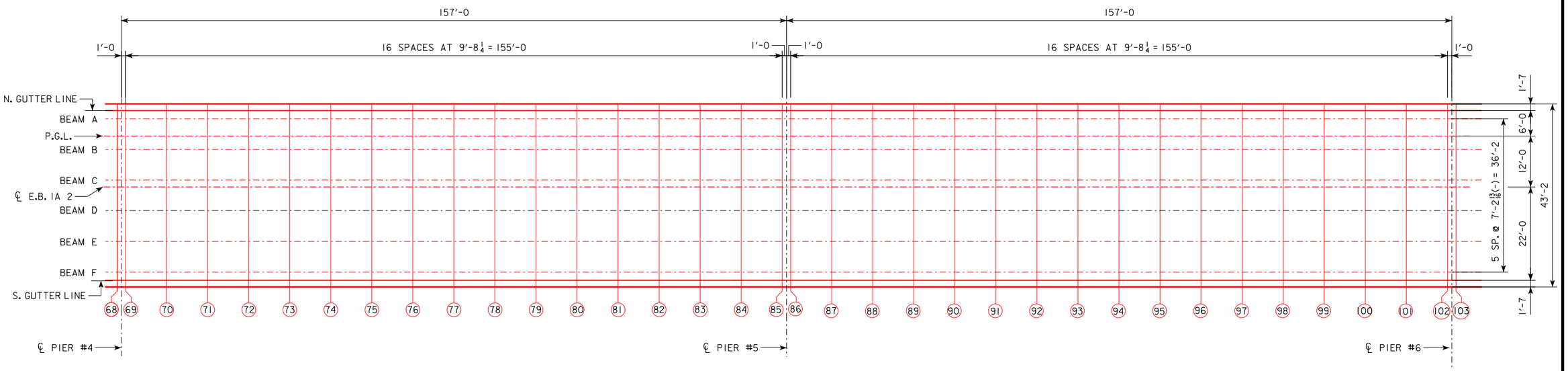

TOP OF SLAB PLAN (SPAN 5 & SPAN 6)

TOP OF SLAB ELEVATIONS

	℄ PIER #4 BEARING																℄ PIER #5 BEARING										
LOCATION	69	70	71	72	73	74	75	76	77	78	79	80	81	82	83	84	85	86	87	88	89	90	91	92	93	94	95
NORTH GUTTER LINE	948.05	948.06	948.07	948.08	948.08	948.08	948.08	948.07	948.07	948.06	948.05	948.04	948.02	948.00	947.98	947.96	947.93	947.93	947.90	947.87	947.84	947.80	947.77	947.73	947.68	947.64	947.59
BEAM A	948.09	948.10	948.11	948.11	948.12	948.12	948.12	948.11	948.11	948.10	948.09	948.07	948.06	948.04	948.02	948.00	947.97	947.97	947.94	947.91	947.88	947.84	947.80	947.77	947.72	947.68	947.63
BEAM B	948.24	948.25	948.25	948.26	948.26	948.26	948.26	948.26	948.25	948.24	948.23	948.22	948.20	948.19	948.16	948.14	948.12	948.11	948.08	948.05	948.02	947.99	947.95	947.91	947.87	947.82	947.78
BEAM C	948.37	948.38	948.39	948.40	948.40	948.40	948.40	948.40	948.39	948.38	948.37	948.36	948.34	948.32	948.30	948.28	948.26	948.25	948.22	948.19	948.16	948.12	948.09	948.05	948.01	947.96	947.91
℄ E.B. IA 2	948.38	948.39	948.40	948.41	948.41	948.41	948.41	948.41	948.40	948.39	948.38	948.37	948.35	948.33	948.31	948.29	948.27	948.26	948.23	948.20	948.17	948.13	948.10	948.06	948.02	947.97	947.93
BEAM D	948.30	948.31	948.32	948.32	948.33	948.33	948.33	948.32	948.32	948.31	948.30	948.28	948.27	948.25	948.23	948.21	948.18	948.18	948.15	948.12	948.09	948.05	948.01	947.97	947.93	947.89	947.84
BEAM E	948.16	948.17	948.17	948.18	948.18	948.18	948.18	948.18	948.17	948.16	948.15	948.14	948.12	948.11	948.08	948.06	948.04	948.03	948.00	947.97	947.94	947.91	947.87	947.83	947.79	947.74	947.70
BEAM F	948.01	948.02	948.03	948.03	948.04	948.04	948.04	948.03	948.03	948.02	948.01	947.99	947.98	947.96	947.94	947.92	947.89	947.89	947.86	947.83	947.80	947.76	947.72	947.68	947.64	947.60	947.55
SOUTH GUTTER LINE	947.97	947.98	947.99	948.00	948.00	948.00	948.00	947.99	947.99	947.98	947.97	947.96	947.94	947.92	947.90	947.88	947.85	947.85	947.82	947.79	947.76	947.72	947.69	947.65	947.60	947.56	947.51

TOP OF SLAB ELEVATIONS

							℄ PIER #6 BEARING
LOCATION	96	97	98	99	100	101	102
NORTH GUTTER LINE	947.55	947.49	947.44	947.38	947.33	947.27	947.20
BEAM A	947.58	947.53	947.48	947.42	947.36	947.30	947.24
BEAM B	947.73	947.68	947.62	947.57	947.51	947.45	947.39
BEAM C	947.87	947.81	947.76	947.71	947.65	947.59	947.52
℄ E.B. IA 2	947.88	947.83	947.77	947.72	947.66	947.60	947.53
BEAM D	947.79	947.74	947.69	947.63	947.57	947.51	947.45
BEAM E	947.65	947.60	947.54	947.49	947.43	947.37	947.31
BEAM F	947.50	947.45	947.40	947.34	947.28	947.22	947.16
SOUTH GUTTER LINE	947.46	947.41	947.36	947.30	947.25	947.19	947.12

PROGRESS PLANS
6/10/2019

DESIGN FOR 0° SKEW

1097'-0 X 40'-0 PRETENSIONED
PRESTRESSED CONCRETE BEAM E.B. BRIDGE

156'-0 END SPANS 157'-0 INTERIOR SPAN

TOP OF SLAB ELEVATIONS

IA 2 STA. 400+85.00, RT. 32.00' JUNE 2019

FREMONT COUNTY

IOWA DEPARTMENT OF TRANSPORTATION - HIGHWAY DIVISION

DESIGN SHEET NO. 35 OF ? FILE NO. 31719 DESIGN NO. 119

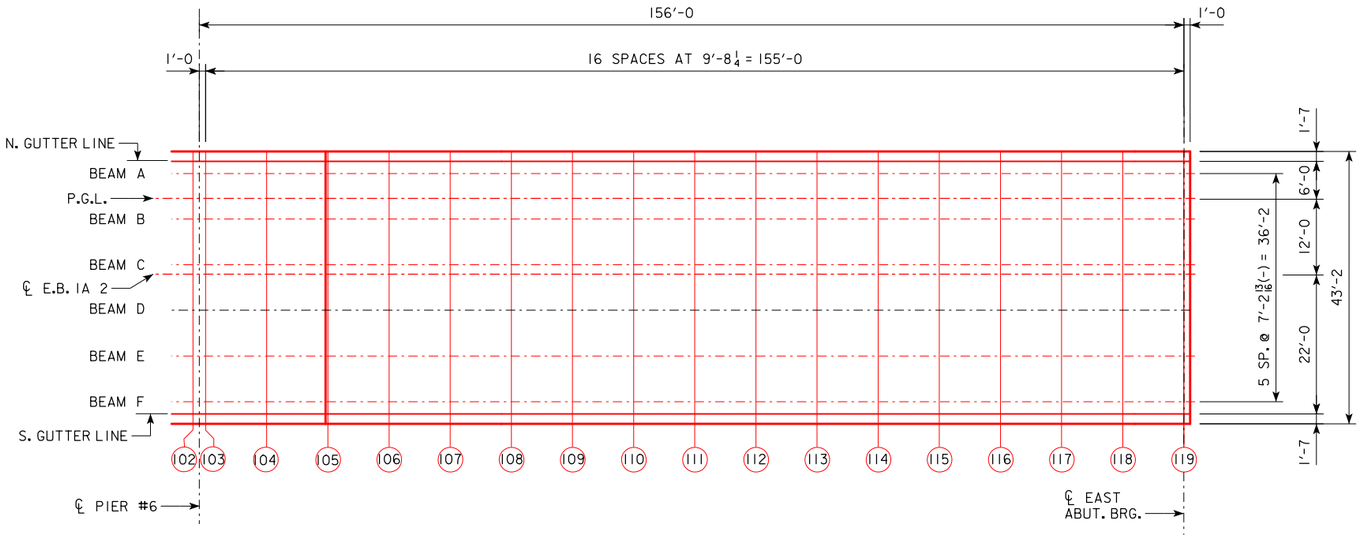

TOP OF SLAB PLAN (SPAN 7)

TOP OF SLAB ELEVATIONS

	℄ PIER #6 BEARING																℄ EAST ABUT. BRG.
LOCATION	103	104	105	106	107	108	109	110	111	112	113	114	115	116	117	118	119
NORTH GUTTER LINE	947.19	947.12	947.05	946.98	946.91	946.84	946.76	946.68	946.60	946.51	946.42	946.34	946.24	946.15	946.05	945.95	945.85
BEAM A	947.23	947.16	947.09	947.02	946.95	946.87	946.80	946.72	946.63	946.55	946.46	946.37	946.28	946.19	946.09	945.99	945.89
BEAM B	947.37	947.31	947.24	947.17	947.09	947.02	946.94	946.86	946.78	946.69	946.61	946.52	946.43	946.33	946.24	946.14	946.04
BEAM C	947.51	947.44	947.38	947.31	947.23	947.16	947.08	947.00	946.92	946.83	946.75	946.66	946.56	946.47	946.37	946.28	946.17
℄ E.B. IA 2	947.52	947.45	947.39	947.32	947.24	947.17	947.09	947.01	946.93	946.84	946.76	946.67	946.58	946.48	946.38	946.29	946.19
BEAM D	947.44	947.37	947.30	947.23	947.16	947.08	947.01	946.93	946.84	946.76	946.67	946.58	946.49	946.40	946.30	946.20	946.10
BEAM E	947.29	947.23	947.16	947.09	947.01	946.94	946.86	946.78	946.70	946.61	946.53	946.44	946.35	946.25	946.16	946.06	945.96
BEAM F	947.15	947.08	947.01	946.94	946.87	946.79	946.72	946.64	946.55	946.47	946.38	946.29	946.20	946.11	946.01	945.91	945.81
SOUTH GUTTER LINE	947.11	947.04	946.97	946.90	946.83	946.76	946.68	946.60	946.52	946.43	946.34	946.26	946.16	946.07	945.97	945.87	945.77

PROGRESS PLANS
6/10/2019

DESIGN FOR 0° SKEW

1097'-0 X 40'-0 PRETENSIONED PRESTRESSED CONCRETE BEAM E.B. BRIDGE

156'-0 END SPANS 157'-0 INTERIOR SPAN

TOP OF SLAB ELEVATIONS

IA 2 STA. 400+85.00, RT. 32.00' JUNE 2019

FREMONT COUNTY

IOWA DEPARTMENT OF TRANSPORTATION - HIGHWAY DIVISION

DESIGN SHEET NO. 36 OF ? FILE NO. 31719 DESIGN NO. 119

TABLE OF BEAM LINE HAUNCH ELEVATIONS

	℄ WEST ABUT.BRG.																℄ PIER #1 BEARING										
LOCATION	LINE 1	LINE 2	LINE 3	LINE 4	LINE 5	LINE 6	LINE 7	LINE 8	LINE 9	LINE 10	LINE 11	LINE 12	LINE 13	LINE 14	LINE 15	LINE 16	LINE 17	LINE 18	LINE 19	LINE 20	LINE 21	LINE 22	LINE 23	LINE 24	LINE 25	LINE 26	LINE 27
BEAM A	944.58	944.70	944.82	944.94	945.05	945.14	945.23	945.30	945.35	945.39	945.42	945.43	945.43	945.42	945.41	945.38	945.35	945.36	945.48	945.60	945.71	945.82	945.91	945.99	946.06	946.12	946.16
BEAM B	944.72	944.85	944.97	945.08	945.19	945.29	945.37	945.44	945.50	945.54	945.57	945.58	945.58	945.57	945.55	945.52	945.50	945.51	945.63	945.75	945.86	945.96	946.06	946.14	946.21	946.26	946.30
BEAM C	944.86	944.98	945.11	945.22	945.33	945.43	945.51	945.58	945.63	945.68	945.70	945.72	945.72	945.71	945.69	945.66	945.63	945.64	945.77	945.88	946.00	946.10	946.19	946.28	946.34	946.40	946.44
BEAM D	944.79	944.91	945.03	945.15	945.26	945.35	945.44	945.51	945.56	945.60	945.63	945.64	945.64	945.63	945.61	945.59	945.56	945.57	945.69	945.81	945.92	946.03	946.12	946.20	946.27	946.33	946.37
BEAM E	944.64	944.77	944.89	945.00	945.11	945.21	945.29	945.36	945.42	945.46	945.48	945.50	945.50	945.49	945.47	945.44	945.42	945.43	945.55	945.67	945.78	945.88	945.98	946.06	946.13	946.18	946.22
BEAM F	944.50	944.62	944.74	944.86	944.97	945.06	945.15	945.22	945.27	945.31	945.34	945.35	945.35	945.34	945.33	945.30	945.27	945.28	945.40	945.52	945.63	945.74	945.83	945.91	945.98	946.04	946.08

TABLE OF BEAM LINE HAUNCH ELEVATIONS

						℄ PIER #2 BEARING	
LINE 28	LINE 29	LINE 30	LINE 31	LINE 32	LINE 33	LINE 34	LOCATION
946.19	946.20	946.20	946.20	946.18	946.16	946.14	BEAM A
946.33	946.35	946.35	946.34	946.33	946.31	946.28	BEAM B
946.47	946.48	946.49	946.48	946.47	946.44	946.42	BEAM C
946.40	946.41	946.41	946.41	946.39	946.37	946.35	BEAM D
946.25	946.27	946.27	946.26	946.25	946.23	946.20	BEAM E
946.11	946.12	946.12	946.12	946.10	946.08	946.06	BEAM F

MISCELLANEOUS DATA TABLE

	BEAM LINE		℄ WEST ABUT.BRG.															℄ PIER #1 BEARING									
			LINE 1	LINE 2	LINE 3	LINE 4	LINE 5	LINE 6	LINE 7	LINE 8	LINE 9	LINE 10	LINE 11	LINE 12	LINE 13	LINE 14	LINE 15	LINE 16	LINE 17	LINE 18	LINE 19	LINE 20	LINE 21	LINE 22	LINE 23	LINE 24	LINE 25	LINE 26
ANTICIPATED DEFLECTION DUE TO SLAB (IN.)	ALL		0	15/16	1 13/16	2 5/8	3 5/16	3 7/8	4 5/16	4 9/16	4 11/16	4 9/16	4 5/16	3 7/8	3 5/16	2 5/8	1 13/16	15/16	0	0	7/8	1 11/16	2 1/2	3 1/8	3 11/16	4 1/16	4 5/16	4 7/16
CROSS SLOPE ADJUSTMENTS (IN.)	A,B,D,E,F		5/16																									
	C		1/4																									
ALLOWABLE FIELD HAUNCH (IN. & FT.)	MIN.	ALL	1/4	1/4	-3/16													1/4	1/4	1/4	1/4	-3/16						
	MAX.	ALL	3 1/4	3 1/4	2 1/2													3 1/4	3 1/4	3 1/4	3 1/4	2 1/2						

MISCELLANEOUS DATA TABLE

								℄ PIER #2 BEARING	BEAM LINE		
LINE 27	LINE 28	LINE 29	LINE 30	LINE 31	LINE 32	LINE 33	LINE 34				
4 5/16	4 1/16	3 11/16	3 1/8	2 1/2	1 11/16	7/8	0	ALL			ANTICIPATED DEFLECTION DUE TO SLAB (IN.)
5/16								A,B,D,E,F			CROSS SLOPE ADJUSTMENTS (IN.)
1/4								C			
-3/16						1/4	1/4	MIN.	ALL		ALLOWABLE FIELD HAUNCH (IN. & FT.)
2 1/2						3 1/4	3 1/4	MAX.	ALL		

HAUNCH LOCATIONS ARE THE SAME LOCATION AS THE ENCIRCLED LETTERS SHOWN ON SLAB ELEVATIONS SHEETS.

PROGRESS PLANS
6/10/2019

DESIGN FOR 0° SKEW

1097'-0 X 40'-0 PRETENSIONED PRESTRESSED CONCRETE BEAM E.B. BRIDGE

156'-0 END SPANS 157'-0 INTERIOR SPAN

HAUNCH DETAILS

IA 2 STA. 400+85.00, RT. 32.00' JUNE 2019

FREMONT COUNTY

IOWA DEPARTMENT OF TRANSPORTATION - HIGHWAY DIVISION

DESIGN SHEET NO. 37 OF ? FILE NO. 31719 DESIGN NO. 119

TABLE OF BEAM LINE HAUNCH ELEVATIONS

	℄ PIER #2 BEARING																℄ PIER #3 BEARING									
LOCATION	LINE 35	LINE 36	LINE 37	LINE 38	LINE 39	LINE 40	LINE 41	LINE 42	LINE 43	LINE 44	LINE 45	LINE 46	LINE 47	LINE 48	LINE 49	LINE 50	LINE 51	LINE 52	LINE 53	LINE 54	LINE 55	LINE 56	LINE 57	LINE 58	LINE 59	LINE 60	LINE 61
BEAM A	946.15	946.27	946.39	946.50	946.60	946.70	946.78	946.85	946.90	946.94	946.97	946.99	946.99	946.98	946.97	946.95	946.92	946.93	947.05	947.17	947.28	947.37	947.46	947.53	947.58	947.62	947.64
BEAM B	946.29	946.41	946.53	946.64	946.75	946.84	946.92	946.99	947.05	947.09	947.12	947.13	947.13	947.13	947.11	947.09	947.07	947.08	947.20	947.31	947.42	947.52	947.60	947.67	947.73	947.76	947.79
BEAM C	946.43	946.55	946.67	946.78	946.88	946.98	947.06	947.13	947.18	947.23	947.25	947.27	947.27	947.27	947.25	947.23	947.20	947.21	947.34	947.45	947.56	947.65	947.74	947.81	947.86	947.90	947.92
BEAM D	946.36	946.48	946.60	946.71	946.81	946.91	946.99	947.06	947.11	947.15	947.18	947.20	947.20	947.19	947.18	947.16	947.13	947.14	947.26	947.38	947.48	947.58	947.67	947.74	947.79	947.83	947.85
BEAM E	946.21	946.33	946.45	946.56	946.67	946.76	946.84	946.91	946.97	947.01	947.04	947.05	947.05	947.05	947.03	947.01	946.99	947.00	947.12	947.23	947.34	947.44	947.52	947.59	947.65	947.68	947.71
BEAM F	946.07	946.19	946.31	946.42	946.52	946.62	946.70	946.77	946.82	946.86	946.89	946.91	946.91	946.90	946.89	946.87	946.84	946.85	946.97	947.09	947.20	947.29	947.38	947.45	947.50	947.54	947.56

TABLE OF BEAM LINE HAUNCH ELEVATIONS

						℄ PIER #4 BEARING	
LINE 62	LINE 63	LINE 64	LINE 65	LINE 66	LINE 67	LINE 68	LOCATION
947.65	947.64	947.62	947.58	947.54	947.48	947.42	BEAM A
947.79	947.78	947.76	947.73	947.68	947.63	947.57	BEAM B
947.93	947.92	947.90	947.86	947.82	947.76	947.70	BEAM C
947.86	947.85	947.83	947.79	947.75	947.69	947.63	BEAM D
947.71	947.70	947.68	947.65	947.60	947.55	947.49	BEAM E
947.57	947.56	947.54	947.50	947.46	947.40	947.34	BEAM F

MISCELLANEOUS DATA TABLE

	BEAM LINE		℄ PIER #2 BEARING															℄ PIER #3 BRG.									
			LINE 35	LINE 36	LINE 37	LINE 38	LINE 39	LINE 40	LINE 41	LINE 42	LINE 43	LINE 44	LINE 45	LINE 46	LINE 47	LINE 48	LINE 49	LINE 50	LINE 51	LINE 52	LINE 53	LINE 54	LINE 55	LINE 56	LINE 57	LINE 58	LINE 59	LINE 60
ANTICIPATED DEFLECTION DUE TO SLAB (IN.)	ALL		0	7/8	1 11/16	2 1/2	3 1/8	3 11/16	4 1/16	4 5/16	4 7/16	4 5/16	4 1/16	3 11/16	3 1/8	2 1/2	1 11/16	7/8	0	0	7/8	1 11/16	2 1/2	3 1/8	3 11/16	4 1/16	4 5/16	4 7/16
CROSS SLOPE ADJUSTMENTS (IN.)	A,B,D,E,F		5/16																									
	C		1/4																									
ALLOWABLE FIELD HAUNCH (IN. & FT.)	MIN.	ALL	1/4	1/4	-3/16													1/4	1/4	1/4	1/4	-3/16						
	MAX.	ALL	3 1/4	3 1/4	2 1/2													3 1/4	3 1/4	3 1/4	3 1/4	2 1/2						

MISCELLANEOUS DATA TABLE

								℄ PIER #4 BRG.	BEAM LINE		
LINE 61	LINE 62	LINE 63	LINE 64	LINE 65	LINE 66	LINE 67	LINE 68				
4 5/16	4 1/16	3 11/16	3 1/8	2 1/2	1 11/16	7/8	0	ALL			ANTICIPATED DEFLECTION DUE TO SLAB (IN.)
5/16								A,B,D,E,F			CROSS SLOPE ADJUSTMENTS (IN.)
1/4								C			
-3/16						1/4	1/4	MIN.	ALL		ALLOWABLE FIELD HAUNCH (IN. & FT.)
2 1/2						3 1/4	3 1/4	MAX.	ALL		

PROGRESS PLANS
6/10/2019

DESIGN FOR 0° SKEW

1097'-0 X 40'-0 PRETENSIONED PRESTRESSED CONCRETE BEAM E.B. BRIDGE

156'-0 END SPANS 157'-0 INTERIOR SPAN

HAUNCH DETAILS

IA 2 STA. 400+85.00, RT. 32.00' JUNE 2019

FREMONT COUNTY

IOWA DEPARTMENT OF TRANSPORTATION - HIGHWAY DIVISION

DESIGN SHEET NO. 38 OF ? FILE NO. 31719 DESIGN NO. 119

TABLE OF BEAM LINE HAUNCH ELEVATIONS

	℄ PIER #4 BRG.																℄ PIER #5 BRG.										
LOCATION	LINE 69	LINE 70	LINE 71	LINE 72	LINE 73	LINE 74	LINE 75	LINE 76	LINE 77	LINE 78	LINE 79	LINE 80	LINE 81	LINE 82	LINE 83	LINE 84	LINE 85	LINE 86	LINE 87	LINE 88	LINE 89	LINE 90	LINE 91	LINE 92	LINE 93	LINE 94	LINE 95
BEAM A	947.42	947.51	947.58	947.65	947.71	947.76	947.79	947.81	947.81	947.79	947.76	947.71	947.65	947.58	947.50	947.40	947.31	947.30	947.35	947.39	947.42	947.44	947.45	947.44	947.42	947.38	947.33
BEAM B	947.57	947.65	947.73	947.80	947.86	947.90	947.94	947.95	947.95	947.94	947.91	947.86	947.80	947.73	947.64	947.55	947.45	947.45	947.49	947.53	947.56	947.58	947.59	947.58	947.56	947.52	947.47
BEAM C	947.71	947.79	947.87	947.94	948.00	948.04	948.07	948.09	948.09	948.07	948.04	948.00	947.94	947.86	947.78	947.69	947.59	947.58	947.63	947.67	947.70	947.72	947.73	947.72	947.70	947.66	947.61
BEAM D	947.63	947.72	947.79	947.86	947.92	947.97	948.00	948.02	948.02	948.00	947.97	947.92	947.86	947.79	947.71	947.61	947.52	947.51	947.55	947.59	947.63	947.65	947.65	947.65	947.63	947.59	947.54
BEAM E	947.49	947.57	947.65	947.72	947.78	947.82	947.86	947.87	947.87	947.86	947.83	947.78	947.72	947.64	947.56	947.47	947.37	947.37	947.41	947.45	947.48	947.50	947.51	947.50	947.48	947.44	947.39
BEAM F	947.34	947.43	947.50	947.57	947.63	947.68	947.71	947.73	947.73	947.71	947.68	947.63	947.57	947.50	947.42	947.32	947.23	947.22	947.27	947.31	947.34	947.36	947.36	947.36	947.34	947.30	947.25

TABLE OF BEAM LINE HAUNCH ELEVATIONS

						℄ PIER #6 BRG.																		℄ EAST ABUT. BRG.	
LINE 96	LINE 97	LINE 98	LINE 99	LINE 100	LINE 101	LINE 102	LINE 103	LINE 104	LINE 105	LINE 106	LINE 107	LINE 108	LINE 109	LINE 110	LINE 111	LINE 112	LINE 113	LINE 114	LINE 115	LINE 116	LINE 117	LINE 118	LINE 119	LOCATION
947.26	947.17	947.07	946.96	946.84	946.71	946.57	946.56	946.57	946.58	946.57	946.56	946.53	946.49	946.43	946.36	946.26	946.16	946.03	945.89	945.74	945.58	945.40	945.23	BEAM A
947.40	947.32	947.22	947.11	946.98	946.85	946.72	946.71	946.72	946.72	946.72	946.70	946.68	946.63	946.58	946.50	946.41	946.30	946.18	946.04	945.88	945.72	945.55	945.37	BEAM B
947.54	947.45	947.36	947.24	947.12	946.99	946.86	946.84	946.85	946.86	946.86	946.84	946.81	946.77	946.71	946.64	946.55	946.44	946.31	946.17	946.02	945.86	945.69	945.51	BEAM C
947.47	947.38	947.28	947.17	947.05	946.92	946.78	946.77	946.78	946.79	946.78	946.77	946.74	946.70	946.64	946.57	946.47	946.37	946.24	946.10	945.95	945.79	945.61	945.43	BEAM D
947.32	947.24	947.14	947.03	946.90	946.77	946.64	946.63	946.64	946.64	946.64	946.62	946.60	946.55	946.50	946.42	946.33	946.22	946.10	945.96	945.80	945.64	945.47	945.29	BEAM E
947.18	947.09	946.99	946.88	946.76	946.63	946.49	946.48	946.49	946.50	946.49	946.48	946.45	946.41	946.35	946.28	946.18	946.08	945.95	945.81	945.66	945.50	945.32	945.15	BEAM F

MISCELLANEOUS DATA TABLE

	BEAM LINE		℄ PIER #4 BRG.															℄ PIER #5 BRG.									
			LINE 69	LINE 70	LINE 71	LINE 72	LINE 73	LINE 74	LINE 75	LINE 76	LINE 77	LINE 78	LINE 79	LINE 80	LINE 81	LINE 82	LINE 83	LINE 84	LINE 85	LINE 86	LINE 87	LINE 88	LINE 89	LINE 90	LINE 91	LINE 92	LINE 93	LINE 94
ANTICIPATED DEFLECTION DUE TO SLAB (IN.)	ALL		0	7/8	1 11/16	2 1/2	3 1/8	3 11/16	4 1/16	4 5/16	4 7/16	4 5/16	4 1/16	3 11/16	3 1/8	2 1/2	1 11/16	7/8	0	0	7/8	1 11/16	2 1/2	3 1/8	3 11/16	4 1/16	4 5/16	4 7/16
CROSS SLOPE ADJUSTMENTS (IN.)	A,B,D,E,F		5/16																									
	C		1/4																									
ALLOWABLE FIELD HAUNCH (IN. & FT.)	MIN.	ALL	1/4	1/4	-3/16													1/4	1/4	1/4	1/4	-3/16						
	MAX.	ALL	3 1/4	3 1/4	2 1/2													3 1/4	3 1/4	3 1/4	3 1/4	2 1/2						

MISCELLANEOUS DATA TABLE

								℄ PIER #6 BRG.																	℄ EAST ABUT.BRG.	BEAM LINE		
LINE 95	LINE 96	LINE 97	LINE 98	LINE 99	LINE 100	LINE 101	LINE 102	LINE 103	LINE 104	LINE 105	LINE 106	LINE 107	LINE 108	LINE 109	LINE 110	LINE 111	LINE 112	LINE 113	LINE 114	LINE 115	LINE 116	LINE 117	LINE 118	LINE 119			
4 5/16	4 1/16	3 11/16	3 1/8	2 1/2	1 11/16	7/8	0	0	15/16	1 13/16	2 5/8	3 5/16	3 7/8	4 5/16	4 9/16	4 11/16	4 9/16	4 5/16	3 7/8	3 5/16	2 5/8	1 13/16	15/16	0	ALL		ANTICIPATED DEFLECTION DUE TO SLAB (IN.)
5/16																									A,B,D,E,F		CROSS SLOPE ADJUSTMENTS (IN.)
1/4																									C		
-3/16						1/4	1/4	1/4	1/4	-3/16													1/4	1/4	MIN.	ALL	ALLOWABLE FIELD HAUNCH (IN. & FT.)
2 1/2						3 1/4	3 1/4	3 1/4	3 1/4	2 1/2													3 1/4	3 1/4	MAX.	ALL	

PROGRESS PLANS
6/10/2019

DESIGN FOR 0° SKEW

1097'-0 X 40'-0 PRETENSIONED PRESTRESSED CONCRETE BEAM E.B. BRIDGE

156'-0 END SPANS 157'-0 INTERIOR SPAN

HAUNCH DETAILS

IA 2 STA. 400+85.00, RT. 32.00' JUNE 2019

FREMONT COUNTY

IOWA DEPARTMENT OF TRANSPORTATION - HIGHWAY DIVISION

DESIGN SHEET NO. 39 OF 2 FILE NO. 31719 DESIGN NO. 119

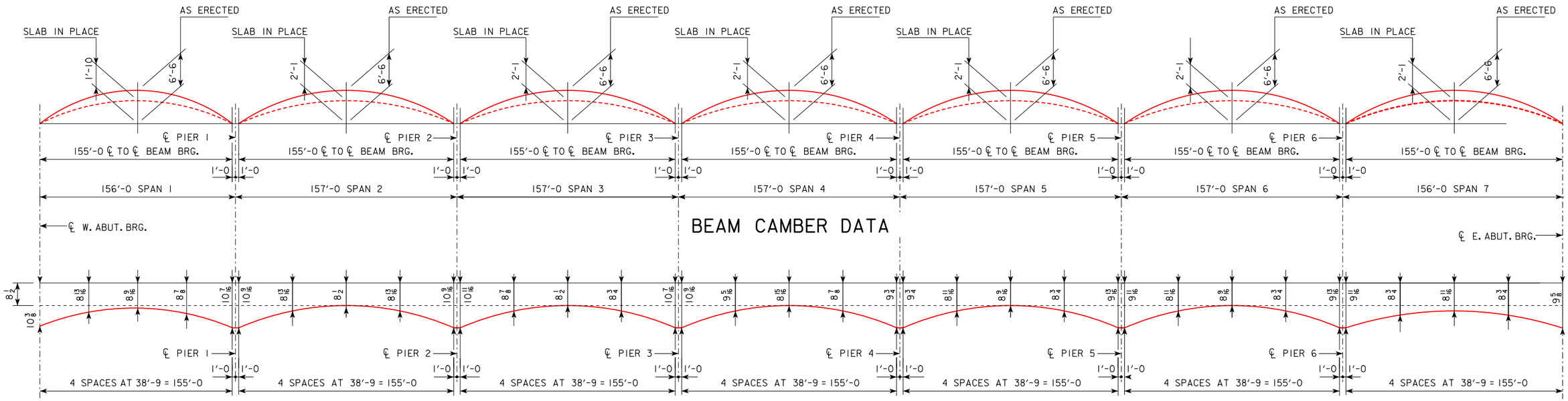

SLAB THICKNESS AT BEAMS (T)

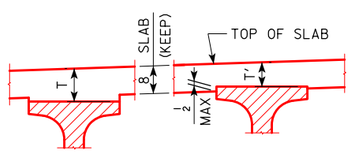

SLAB THICKNESS DETAILS

NOTE: THE SLAB THICKNESS (T) AT BEAMS IS BASED ON THE ANTICIPATED BEAM CAMBER AND DEFLECTIONS. THESE VALUES ARE USED BY THE DESIGNER TO SET BEAM ELEVATIONS AND ESTIMATE CONCRETE QUANTITIES. REFER TO THE HAUNCH DATA DETAILS SHEET FOR ADDITIONAL INFORMATION TO AID THE CONTRACTOR IN SETTING THE FIELD HAUNCHES REQUIRED FOR CONSTRUCTION.

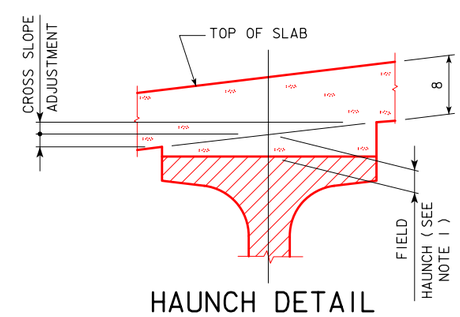

HAUNCH DETAIL

NOTE 1:
TO CALCULATE FIELD HAUNCH REQUIRED AT EACH LOCATION, SURVEY THE BEAM TOPS CONSISTENT WITH THE SPACINGS SHOWN ON THE "TOP OF SLAB ELEVATIONS LAYOUT". SUBTRACT THE SURVEYED BEAM SHOT FROM THE "BEAM LINE HAUNCH ELEVATION". THIS VALUE WILL BE THE HAUNCH NEEDED (SEE "FIELD HAUNCH" IN HAUNCH DETAIL). THE "BEAM LINE HAUNCH ELEVATION" INCLUDES ADJUSTMENTS FOR SLAB THICKNESSES AND ANTICIPATED DEFLECTIONS. NO ADDITIONAL CALCULATIONS ARE REQUIRED. IF THE FIELD HAUNCH EXCEEDS THE MAXIMUMS AND MINIMUMS SHOWN IN INCHES AND DECIMALS OF FEET IN THE MISCELLANEOUS DATA TABLE, ADJUSTMENTS TO THE GRADE OR ADDITIONAL HAUNCH REINFORCEMENT WILL BE REQUIRED.

NOTE:
BRIDGE SEAT ELEVATIONS ARE SET BASED ON THEORETICAL CAMBER AND BEAM DEFLECTIONS. THESE BRIDGE SEATS WILL PROVIDE A THEORETICAL BEAM HAUNCH WITHIN DESIGN PARAMETERS. FIELD HAUNCHES ARE DETERMINED USING SURVEYED TOP OF BEAM ELEVATIONS AND "BEAM LINE HAUNCH ELEVATION" DATA. ALLOWABLE MAXIMUM AND MINIMUM "FIELD HAUNCH" VALUES ARE GIVEN IN INCHES AND DECIMALS OF FEET IN THE "MISCELLANEOUS DATA" TABLE. "CROSS SLOPE ADJUSTMENT" VALUES WILL AID THE CONTRACTOR IN DETERMINING ACTUAL FORMED HAUNCH DIMENSIONS AT THE EDGES OF THE TOP FLANGE.

PRELIMINARY PLANS
6/10/2019

DESIGN FOR 0° SKEW

1097'-0 X 40'-0 PRETENSIONED PRESTRESSED CONCRETE BEAM E.B. BRIDGE

156'-0 END SPANS — 157'-0 INTERIOR SPAN

SLAB THICKNESS DIAGRAM & DETAILS

IA 2 STA. 400+85.00, RT. 32.00' — JUNE 2019

FREMONT COUNTY

IOWA DEPARTMENT OF TRANSPORTATION - HIGHWAY DIVISION

DESIGN SHEET NO. 40 OF ? FILE NO. 31719 DESIGN NO. 119

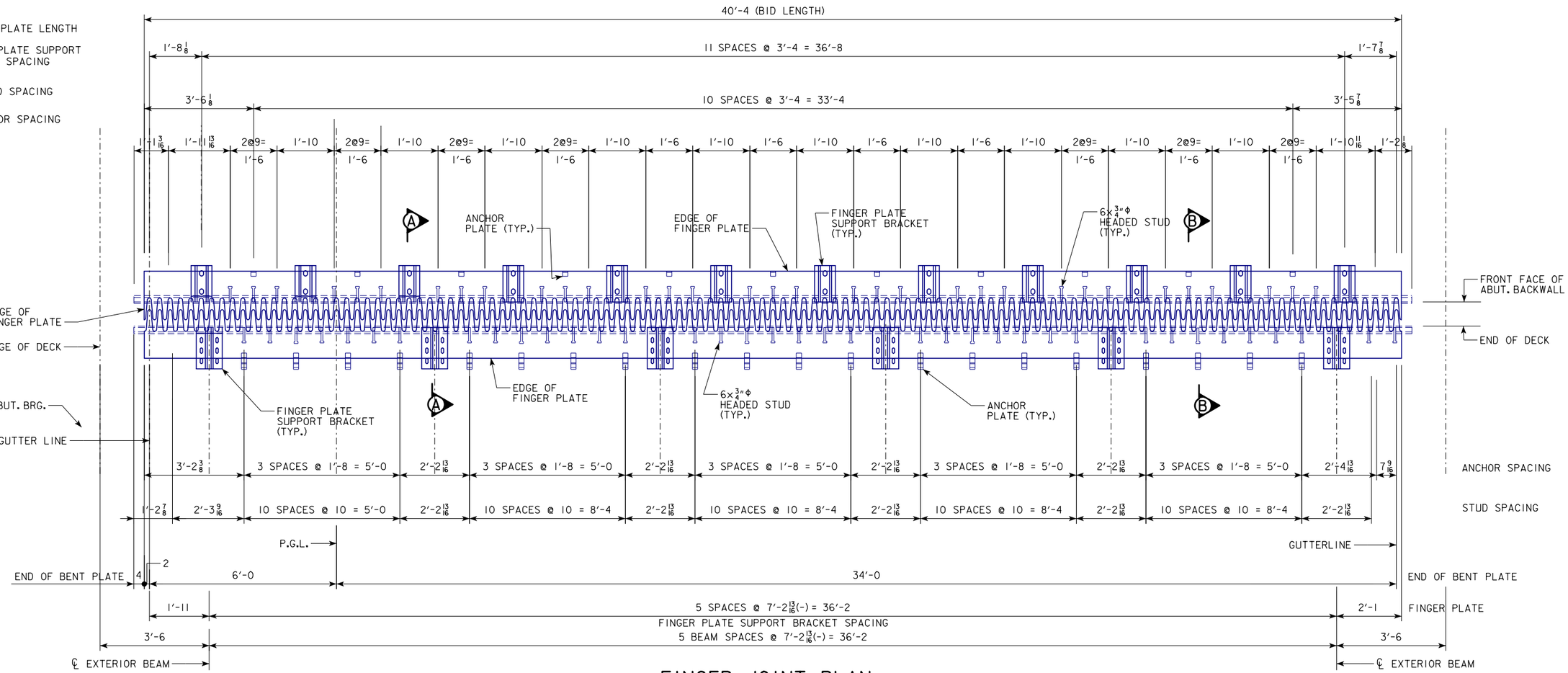

FINGER JOINT PLAN

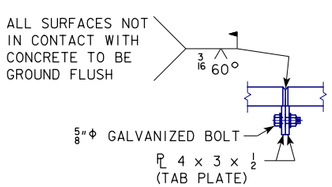

END VIEW

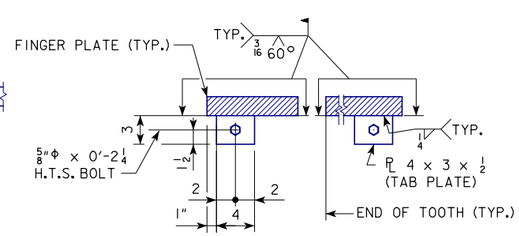

SECTION THRU FINGER PLATES

FIELD SPLICE DETAIL

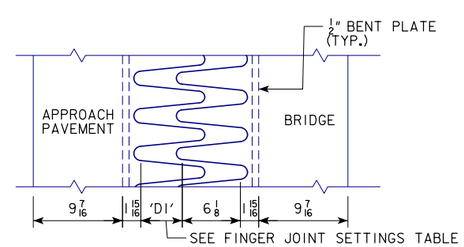

JOINT SETTING DETAIL

(PLAN VIEW)

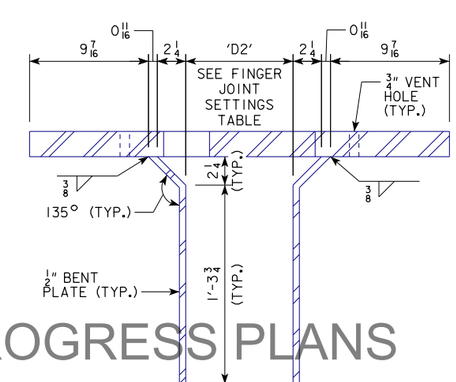

EXPANSION OPENING DETAIL

NOTES:

GALVANIZED COATING DAMAGE BY FIELD WELDING SHALL BE REPAIRED IN ACCORDANCE WITH MATERIALS I.M. 410.

ALL FINGER JOINT PARTS EXCEPT TROUGH HARDWARE SHALL BE GALVANIZED AFTER WELDING.

BARRIER EXPANSION DETAILS NOT SHOWN. SEE DESIGN SHEET ___ FOR DETAILS.

SEE DESIGN SHEET ___ FOR FINGER PLATE SUPPORT BRACKET AND ANCHOR PLATE DETAILS.

SEE DESIGN SHEET ___ FOR SECTION VIEWS.

FIELD CONSTRUCTION NOTES:

THE FINGER JOINT SPLICE LOCATION SHALL BE DETAILED ON THE SHOP DRAWINGS. THE CONNECTION DETAILS SHALL INCLUDE TAB PLATES AND PREPARED ENDS TO ACCOMMODATE THE NECESSARY WELDING. SEE DETAILS IN THESE PLANS.

GALVANIZED COATING DAMAGE BY FIELD WELDING SHALL BE REPAIRED IN ACCORDANCE WITH MATERIALS I.M. 410.

NOTE:
JOINT SETTINGS FOR OTHER TEMPERATURES ARE PROPORTIONAL. TEMPERATURES SHOWN ARE CONCRETE DECK TEMPERATURES ON THE UNDERSIDE OR SHADED PORTION OF THE DECK.

FINGER JOINT SETTINGS

TEMPERATURE (°F)	NORTH ABUTMENT	
	'D1'	'D2'
10	5 3/8"	9 1/2"
50	3 13/16"	8"
90	2 3/16"	6 3/8"

PROGRESS PLANS
6/10/2019

DESIGN FOR 0° SKEW

1097'-0 X 40'-0 PRETENSIONED PRESTRESSED CONCRETE BEAM E.B. BRIDGE

156'-0 END SPANS — 157'-0 INTERIOR SPAN

FINGER PLATE DETAILS

IA 2 STA. 400+85.00, RT. 32.00' — JUNE 2019

FREMONT COUNTY

IOWA DEPARTMENT OF TRANSPORTATION - HIGHWAY DIVISION

DESIGN SHEET NO. 41 OF ? FILE NO. 31719 DESIGN NO. 119

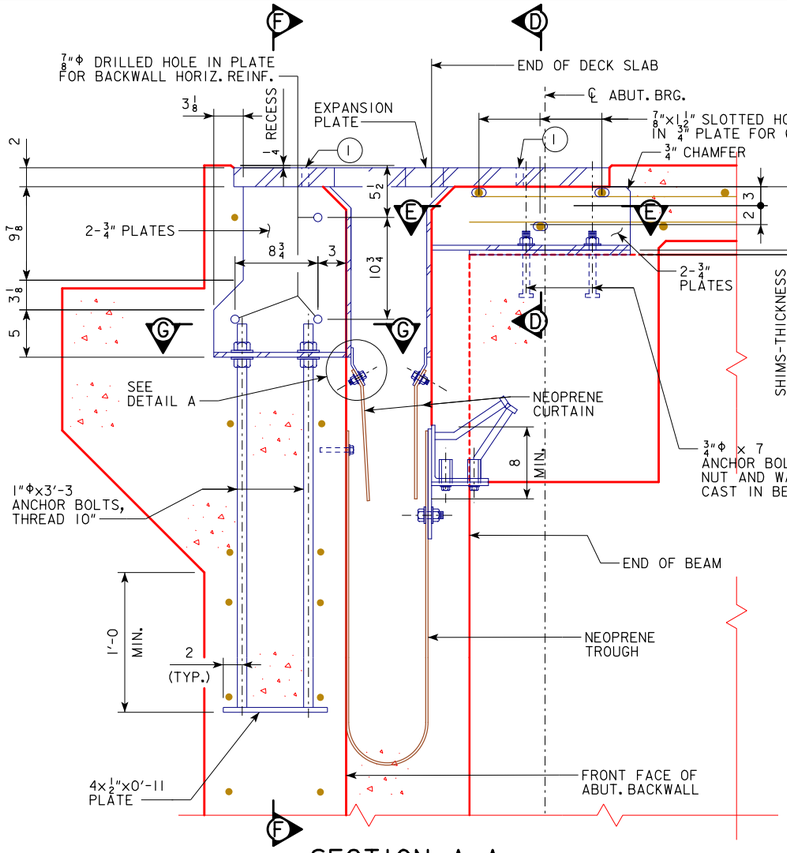

SECTION A-A

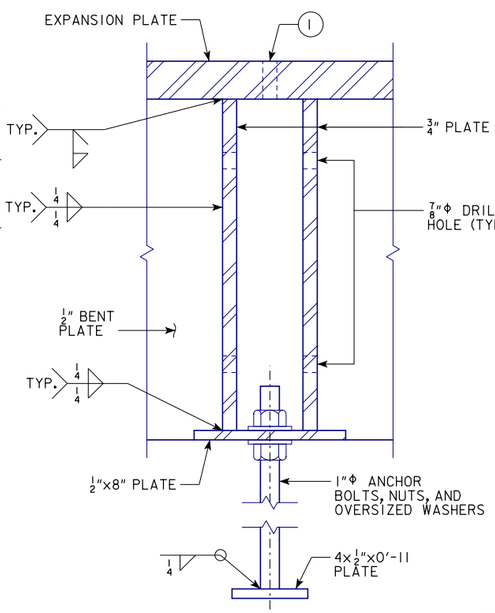

SECTION F-F
(SUPPORT BRACKET ASSEMBLY)

SHIM NOTE:
CONTRACTOR TO PROVIDE 2 - 1/4" SHIMS AND 1 - 1/8" SHIM FOR EACH BRACKET CONNECTED TO CONCRETE BEAM. IN ADDITION, ONE TAPERED SHIM SHALL BE PROVIDED AT EACH BRACKET TO ACCOUNT FOR THE CROSS-SLOPE OF THE BRIDGE DECK. ALL SHIMS MAY NOT BE USED.

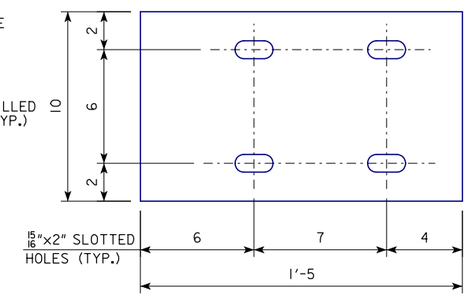

SHIM PLAN VIEW

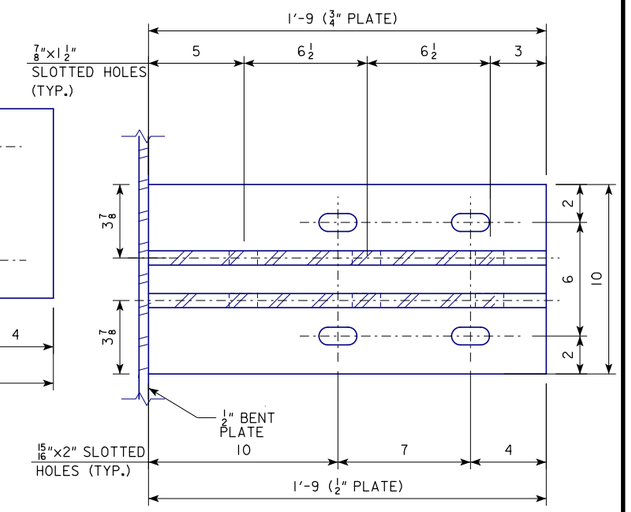

SECTION E-E

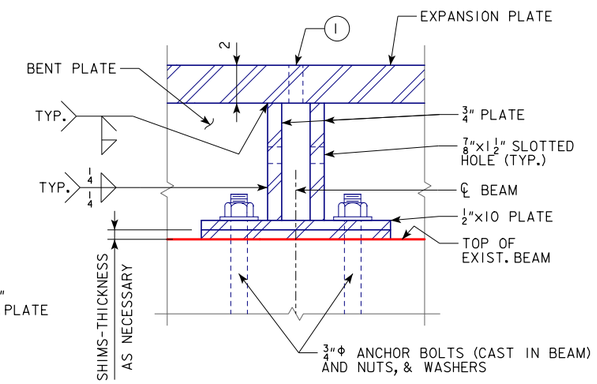

SECTION D-D
(SUPPORT BRACKET ASSEMBLY)

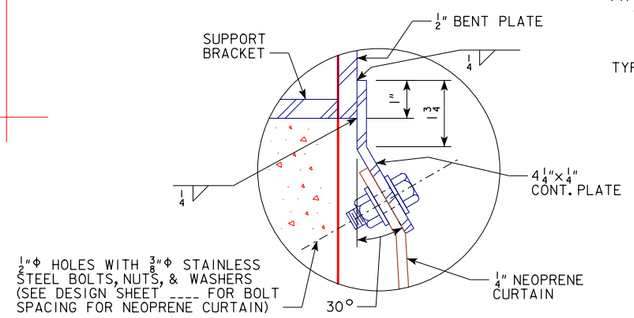

DETAIL A

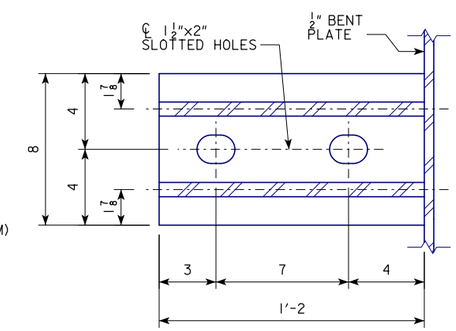

SECTION G-G

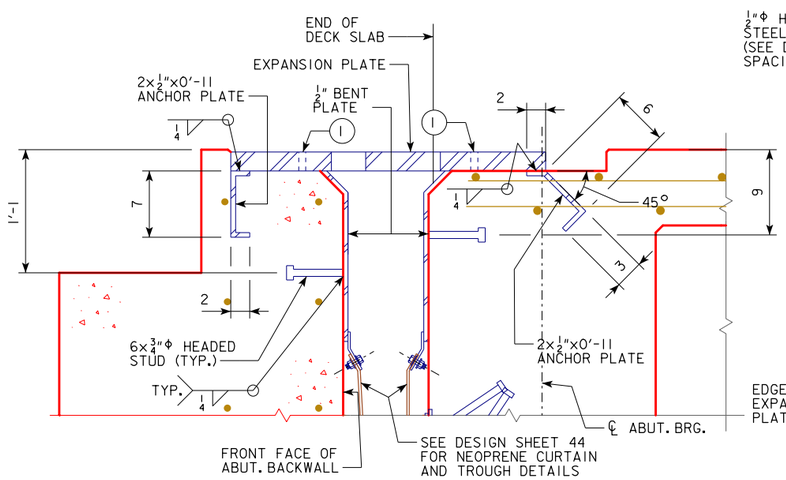

SECTION B-B

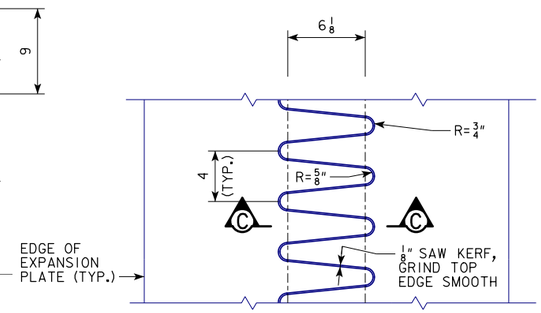

PART PLAN TOOTH LAYOUT

(1) PROVIDE 3/4"Φ AIR BLEED VENT HOLES. PROVIDE ONE HOLE CENTERED DIRECTLY ABOVE EACH BRACKET ASSEMBLY AND ADDITIONAL HOLES SPACED AT 1'-6 MAX. BETWEEN BRACKET ASSEMBLIES. UPON COMPLETION, FILL VENT HOLES WITH CONCRETE.

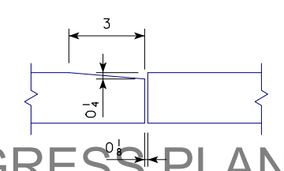

SECTION C-C

NOTE:
TOP OF EXPANSION DEVICE IS TO BE PARALLEL TO GRADE. FLAME CUT FROM 2'-6x2" PLATE. BEVEL EACH TOOTH 1/4"x3".

NOTES:

CONCRETE SHALL BE FORCED UNDER AND AROUND FINGER PLATE SUPPORTING HARDWARE, STUDS AND BARS. PROPER CONSOLIDATION SHALL BE ACHIEVED BY LOCALIZED INTERNAL VIBRATION.

PROGRESS PLANS
6/10/2019

DESIGN FOR 0° SKEW

1097'-0 X 40'-0 PRETENSIONED PRESTRESSED CONCRETE BEAM E.B. BRIDGE

156'-0 END SPANS — 157'-0 INTERIOR SPAN

EXPANSION DEVICE DETAILS

IA 2 STA. 400+85.00, RT. 32.00' — JUNE 2019

FREMONT COUNTY

IOWA DEPARTMENT OF TRANSPORTATION - HIGHWAY DIVISION

DESIGN SHEET NO. 42 OF ? FILE NO. 31719 DESIGN NO. 119

NOTES:
1. SEE DESIGN SHEET 20 FOR NEOPRENE CURTAIN AND TROUGH DETAILS.
2. UPON COMPLETION OF FINGER JOINT AND DRAINAGE TROUGH INSTALLATION, THE CONTRACTOR SHALL FLUSH THE SYSTEM WITH WATER TO TEST THAT WATER IS PROPERLY DIRECTED INTO THE DRAIN BLOCK AND BERM BLOCK WITHOUT LEAKING ONTO THE ABUTMENT SURFACES.
3. SEE DESIGN SHEETS 12 AND 13 FOR DRAIN BLOCK AND BERM BLOCK DETAILS.

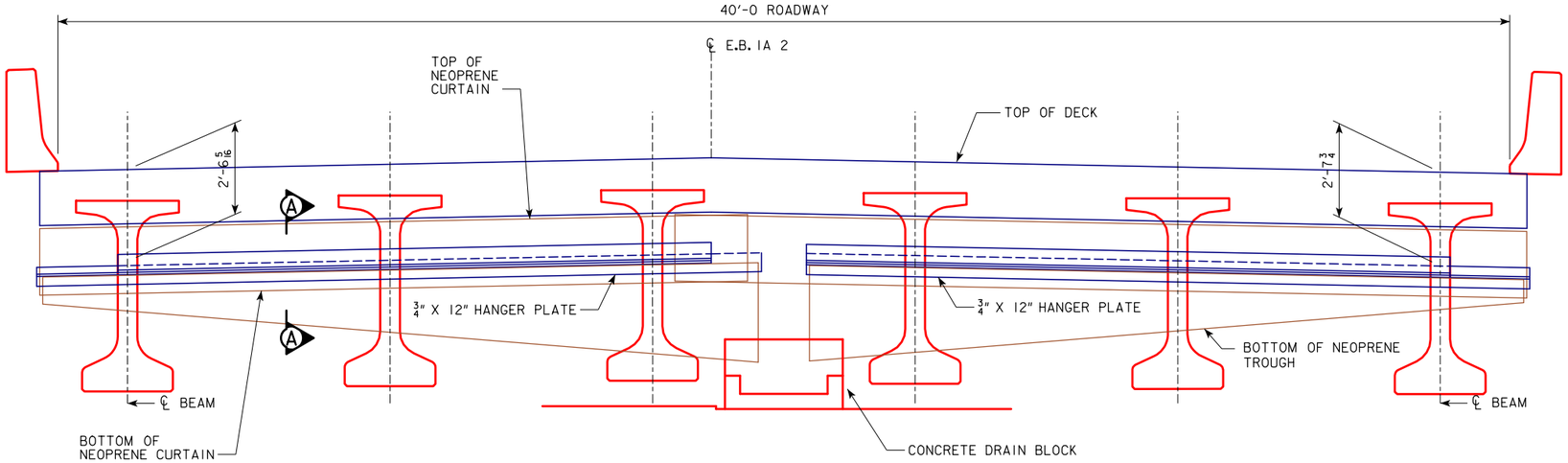

ELEVATION AT ABUTMENT JOINT
(EAST ABUTMENT SHOWN, WEST ABUTMENT SIMILAR)

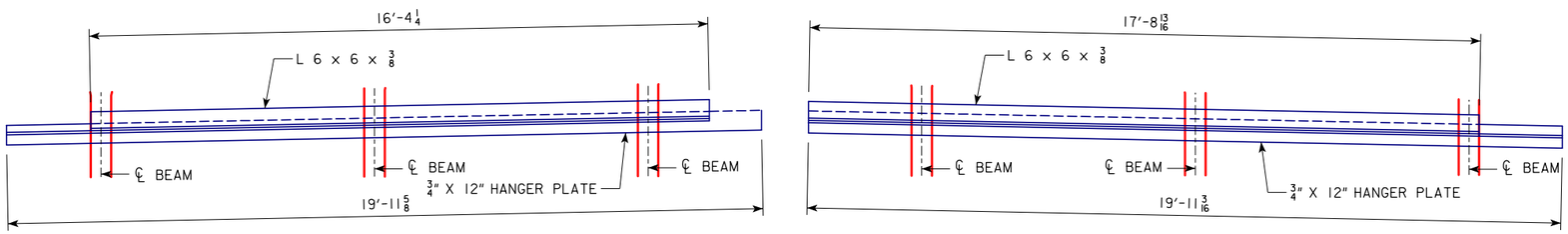

TROUGH HANGER PLATE DETAIL

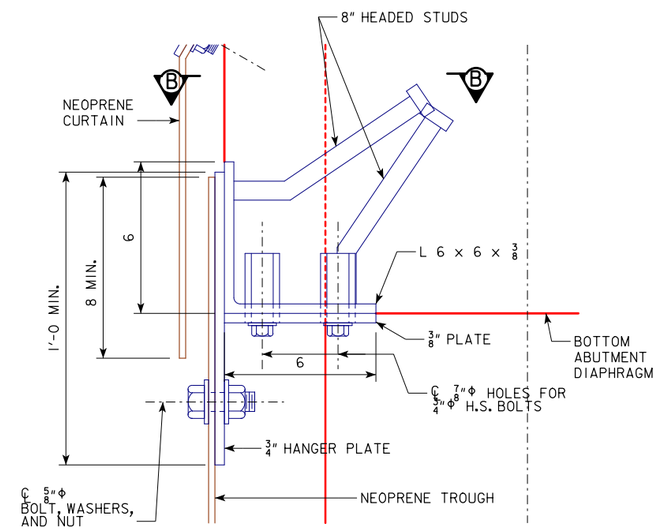

SECTION A-A

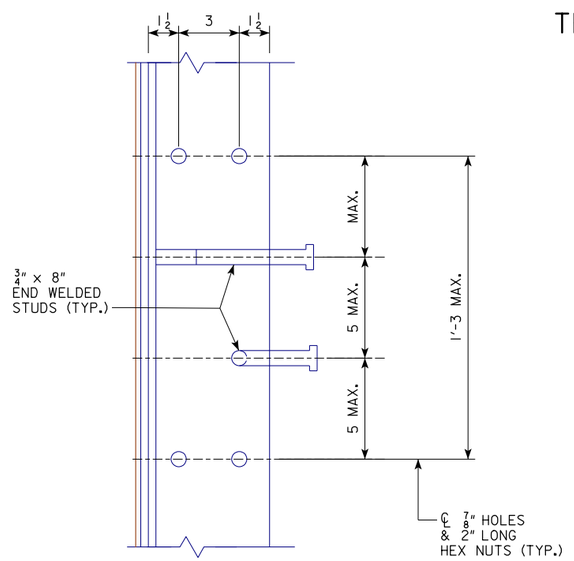

SECTION B-B

PROGRESS PLANS
6/10/2019

DESIGN FOR 0° SKEW
1097'-0 X 40'-0 PRETENSIONED PRESTRESSED CONCRETE BEAM E.B. BRIDGE
156'-0 END SPANS 157'-0 INTERIOR SPAN
EXPANSION JOINT DRAINAGE TROUGH DETAILS
IA 2 STA. 400+85.00, RT. 32.00' JUNE 2019
FREMONT COUNTY
IOWA DEPARTMENT OF TRANSPORTATION - HIGHWAY DIVISION
DESIGN SHEET NO. 43 OF ? FILE NO. 31719 DESIGN NO. 119

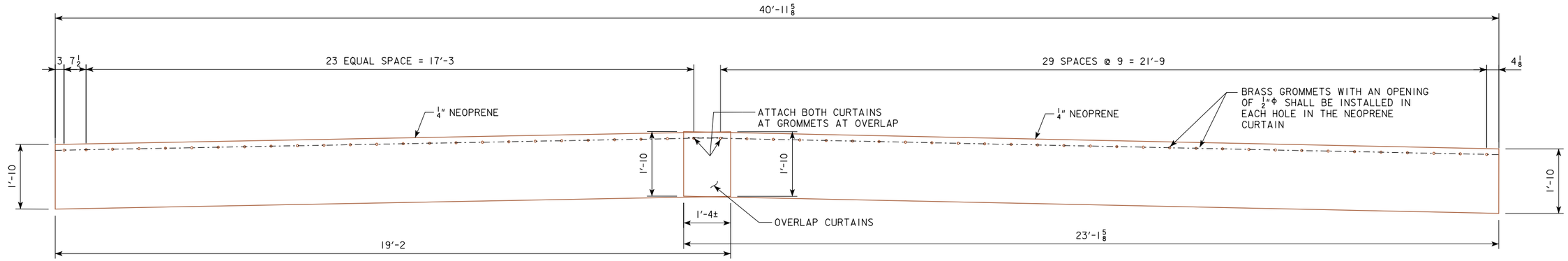

ELEVATION VIEW - NEOPRENE CURTAINS

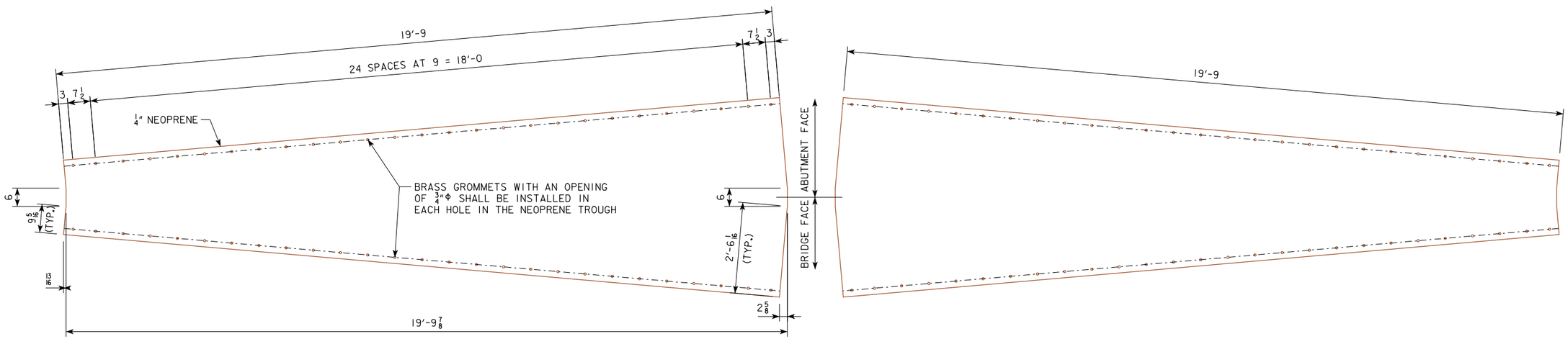

PLAN VIEW - NEOPRENE TROUGHS

NEOPRENE NOTES:

THE ELASTOMER COMPOUND FOR TROUGHS AND CURTAINS SHALL BE IN ACCORDANCE WITH TABLE 4195.02-2 OF THE STANDARD SPECIFICATIONS, EXCEPT THE TENSILE STRENGTH SHALL BE 1500 PSI MINIMUM OR IT SHALL BE (EPDM) ETHYLENE PROPYENE DIENE MONOMER (ASTM D 200, LINE CALL OUTS 3BA, 515, A14, B13, F17, C12, K21).

STAINLESS STEEL BOLTS, WASHERS, NUTS AND CONCRETE ANCHORS SHALL MEET THE REQUIREMENTS OF ASTM 193 AND IOWA D.O.T. I.M. 453.07.

ORIGINAL PLANS
6/10/2019

DESIGN FOR 0° SKEW

1097'-0 X 40'-0 PRETENSIONED PRESTRESSED CONCRETE BEAM E.B. BRIDGE

156'-0 END SPANS 157'-0 INTERIOR SPAN

EXPANSION JOINT NEOPRENE DETAILS

IA 2 STA. 400+85.00, RT. 32.00' JUNE 2019

FREMONT COUNTY

IOWA DEPARTMENT OF TRANSPORTATION - HIGHWAY DIVISION

DESIGN SHEET NO. 44 OF ? FILE NO. 31719 DESIGN NO. 119

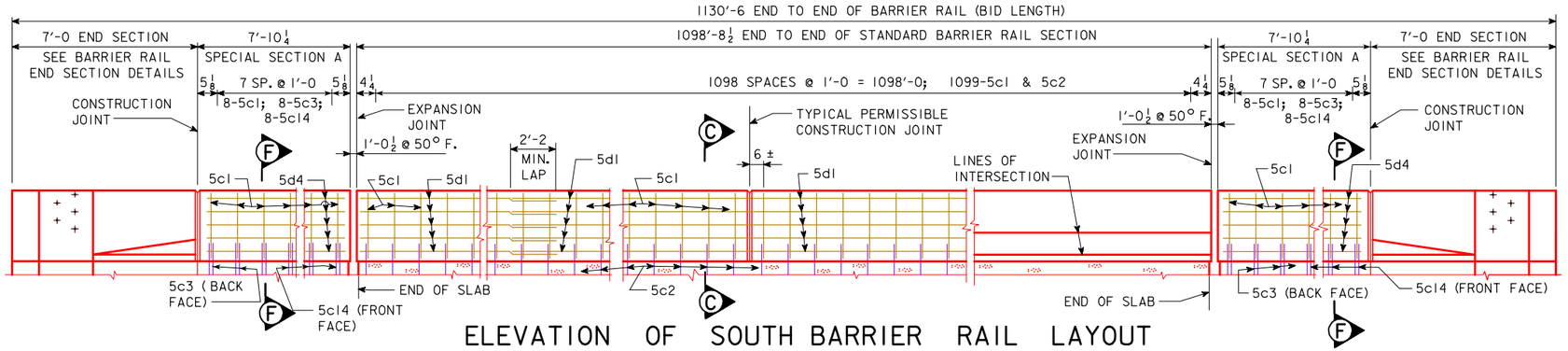

ELEVATION OF SOUTH BARRIER RAIL LAYOUT

(LOOKING SOUTH)

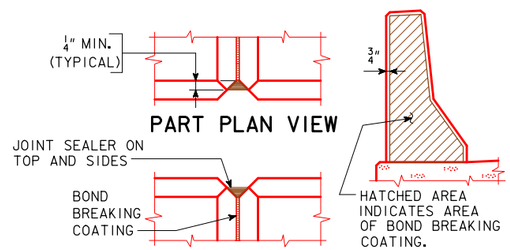

PART PLAN VIEW

PART ELEVATION VIEW

BARRIER RAIL JOINT DETAILS

NOTE: REINFORCING STEEL QUANTITIES ARE INCLUDED ON THE SUMMARY QUANTITIES SHEET.

Δ NOTE: CONDUIT SUPPORT BAR DETAILS AND QUANTITIES ARE ON DESIGN SHEET XX

EPOXY COATED REINF. STEEL - SOUTH RAIL

SECTION	BAR	LOCATION	SHAPE	NO.	LENGTH	WEIGHT
STANDARD SECTIONS	5c1	RAIL, VERTICAL		1099	5'-11	6782
	5d1	RAIL, LONGITUDINAL		261	40'-0	10889
SPECIAL SECTIONS	5c1	RAIL, VERTICAL		16	5'-11	99
	5d4	RAIL, LONGIT.- SPECIAL SECTION A		18	7'-6	141
					EPOXY STEEL TOTAL (LBS.)	17911

STAINLESS STEEL REINF. STEEL - SOUTH RAIL

SECTION	BAR	LOCATION	SHAPE	NO.	LENGTH	WEIGHT
STD. SECTS.	5c2	RAIL, VERTICAL		1099	6'-0	6878
SPECIAL SECTIONS	5c3	RAIL, VERTICAL		16	3'-3	54
	5c14	RAIL, VERTICAL		16	3'-10	64
					STAINLESS STEEL TOTAL (LBS.)	6996

BENT BAR DETAILS

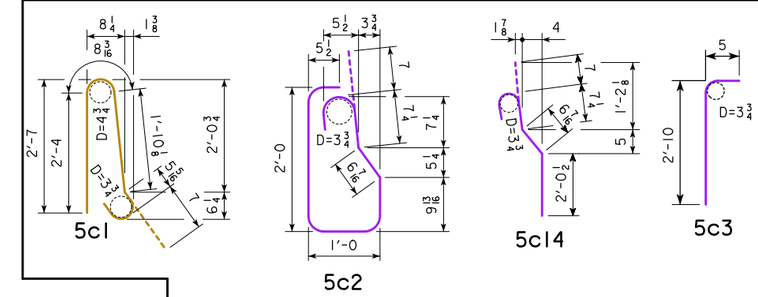

NOTE: ALL DIMENSIONS ARE OUT TO OUT. D = PIN DIAMETER.

CONCRETE PLACEMENT SUMMARY

SECTION		TOTAL
STANDARD SECTION	1098'-8½ @ 0.1052 CU. YD. PER FT.	115.6
SPECIAL SECTION A	15'-8½ @ 0.1052 CU. YD. PER FT.	1.7
	TOTAL (CU. YD.)	117.3

CONCRETE BARRIER RAIL QUANTITIES

ITEM	UNIT	QUANTITY
CONCRETE BARRIER RAILING	L.F.	1130.5

BARRIER RAIL NOTES:

MINIMUM CLEAR DISTANCE FROM FACE OF CONCRETE TO NEAR REINFORCING BAR IS TO BE 2" UNLESS OTHERWISE NOTED OR SHOWN.

THE PERMISSIBLE CONSTRUCTION JOINTS ARE TO BE PLACED BETWEEN VERTICAL BARS AT A MINIMUM SPACING OF 20 FEET. CONSTRUCTION JOINT CONTACT SURFACES ARE TO BE COATED WITH AN APPROVED BOND BREAKER.

COST OF THE JOINT SEALER AND BOND BREAKER SHALL BE CONSIDERED INCIDENTAL TO OTHER CONSTRUCTION.

ALL BARRIER RAIL REINFORCING STEEL IS TO BE EITHER EPOXY COATED OR STAINLESS STEEL AS SHOWN. THE STAINLESS STEEL REINFORCING STEEL SHALL BE DEFORMED BAR GRADE 60 MEETING THE REQUIREMENTS OF MATERIALS I.M. 452.

THE CONCRETE BARRIER RAIL IS TO BE BID ON A LINEAL FOOT BASIS. THE NUMBER OF LINEAL FEET OF BARRIER RAIL INSTALLED WILL BE PAID FOR AT THE CONTRACT PRICE PER LINEAL FOOT BASED ON PLAN QUANTITIES. PRICE BID FOR CONCRETE BARRIER RAILING SHALL BE FULL COMPENSATION FOR FURNISHING ALL MATERIAL, EXCLUDING REINFORCING STEEL, AND ALL OF THE EQUIPMENT AND LABOR REQUIRED TO ERECT THE RAIL IN ACCORDANCE WITH THESE PLANS AND CURRENT SPECIFICATIONS. IF CONDUIT IS REQUIRED IN THIS PLAN THE RIGID STEEL CONDUIT, JUNCTION BOXES AND FITTINGS INCLUDING LABOR AND ANY ADDITIONAL WORK TO DO THE INSTALLATION IS CONSIDERED INCIDENTAL TO THE COST OF THE RAILING.

THE JOINT SEALER SHALL BE LIGHT GRAY NONSAG LATEX CAULKING SEALER MARKETED FOR OUTDOOR USE. NO TESTING OR CERTIFICATION IS REQUIRED.

TOP OF THE BARRIER RAIL IS TO BE PARALLEL TO THE THEORETICAL ℄ GRADE.

CROSS SECTIONAL AREA OF THE STANDARD SECTION OF THE BARRIER RAIL = 2.84 SQUARE FEET.

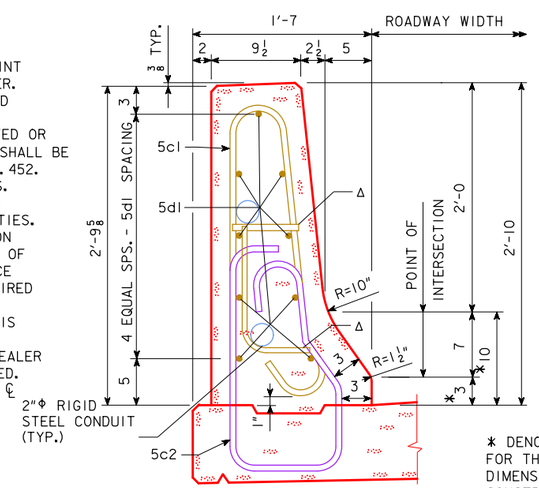

PART SECTION C-C

* DENOTES THE MAXIMUM VALUE FOR THIS DIMENSION. THIS DIMENSION MAY VARY DUE TO CONSTRUCTION INACCURACIES.

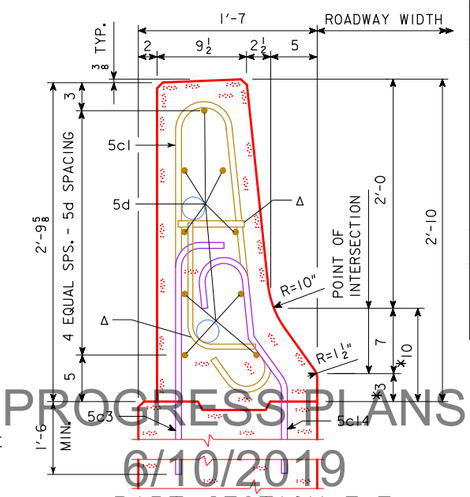

PART SECTION F-F

PROGRESS PLANS
6/10/2019

DESIGN FOR 0° SKEW

1097'-0 X 40'-0 PRETENSIONED PRESTRESSED CONCRETE BEAM E.B. BRIDGE

156'-0 END SPANS 157'-0 INTERIOR SPAN

SOUTH BARRIER RAIL DETAILS

IA 2 STA. 400+85.00, RT. 32.00' JUNE 2019

FREMONT COUNTY

IOWA DEPARTMENT OF TRANSPORTATION - HIGHWAY DIVISION

DESIGN SHEET NO. 45 OF 2 FILE NO. 31719 DESIGN NO. 119

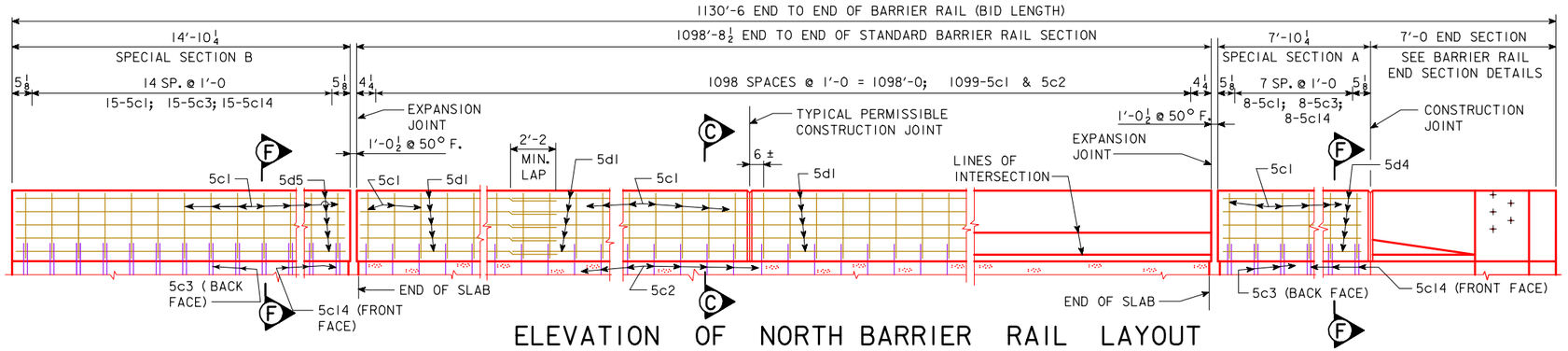

ELEVATION OF NORTH BARRIER RAIL LAYOUT

(LOOKING NORTH)

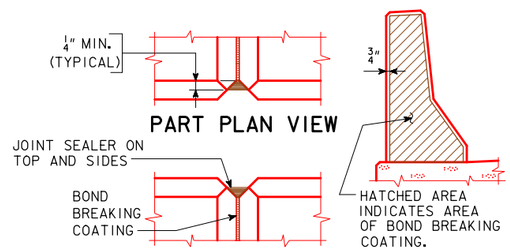

PART PLAN VIEW

PART ELEVATION VIEW

BARRIER RAIL JOINT DETAILS

NOTE: REINFORCING STEEL QUANTITIES ARE INCLUDED ON THE SUMMARY QUANTITIES SHEET.

Δ NOTE: CONDUIT SUPPORT BAR DETAILS AND QUANTITIES ARE ON DESIGN SHEET XX

EPOXY COATED REINF. STEEL - NORTH RAIL

SECTION	BAR	LOCATION	SHAPE	NO.	LENGTH	WEIGHT
STANDARD SECTIONS	5c1	RAIL, VERTICAL		1099	5'-11	6782
	5d1	RAIL, LONGITUDINAL		261	40'-0	10889
SPECIAL SECTIONS	5c1	RAIL, VERTICAL		23	5'-11	142
	5d4	RAIL, LONGIT.- SPECIAL SECTION A		9	7'-6	70
	5d5	RAIL, LONGIT.- SPECIAL SECTION B		9	14'-6	136
					EPOXY STEEL TOTAL (LBS.)	18019

STAINLESS STEEL REINF. STEEL - NORTH RAIL

SECTION	BAR	LOCATION	SHAPE	NO.	LENGTH	WEIGHT
STD. SECTS.	5c2	RAIL, VERTICAL		1099	6'-0	6878
SPECIAL SECTIONS	5c3	RAIL, VERTICAL		23	3'-3	78
	5c14	RAIL, VERTICAL		23	3'-10	92
					STAINLESS STEEL TOTAL (LBS.)	7048

BENT BAR DETAILS

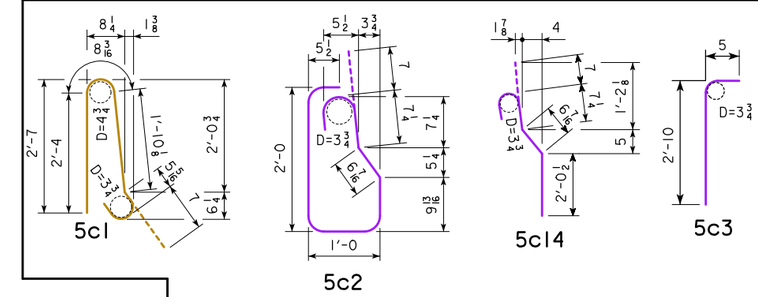

NOTE: ALL DIMENSIONS ARE OUT TO OUT. D = PIN DIAMETER.

CONCRETE PLACEMENT SUMMARY

SECTION		TOTAL
STANDARD SECTION	1098'-8 1/2 @ 0.1052 CU. YD. PER FT.	115.6
SPECIAL SECTION A	7'-10 1/4 @ 0.1052 CU. YD. PER FT.	0.8
SPECIAL SECTION B	14'-10 1/4 @ 0.1052 CU. YD. PER FT.	1.6
	TOTAL (CU. YD.)	118.0

CONCRETE BARRIER RAIL QUANTITIES

ITEM	UNIT	QUANTITY
CONCRETE BARRIER RAILING	L.F.	1130.5

BARRIER RAIL NOTES:

MINIMUM CLEAR DISTANCE FROM FACE OF CONCRETE TO NEAR REINFORCING BAR IS TO BE 2" UNLESS OTHERWISE NOTED OR SHOWN.

THE PERMISSIBLE CONSTRUCTION JOINTS ARE TO BE PLACED BETWEEN VERTICAL BARS AT A MINIMUM SPACING OF 20 FEET. CONSTRUCTION JOINT CONTACT SURFACES ARE TO BE COATED WITH AN APPROVED BOND BREAKER.

COST OF THE JOINT SEALER AND BOND BREAKER SHALL BE CONSIDERED INCIDENTAL TO OTHER CONSTRUCTION.

ALL BARRIER RAIL REINFORCING STEEL IS TO BE EITHER EPOXY COATED OR STAINLESS STEEL AS SHOWN. THE STAINLESS STEEL REINFORCING STEEL SHALL BE DEFORMED BAR GRADE 60 MEETING THE REQUIREMENTS OF MATERIALS I.M. 452.

THE CONCRETE BARRIER RAIL IS TO BE BID ON A LINEAL FOOT BASIS. THE NUMBER OF LINEAL FEET OF BARRIER RAIL INSTALLED WILL BE PAID FOR AT THE CONTRACT PRICE PER LINEAL FOOT BASED ON PLAN QUANTITIES. PRICE BID FOR CONCRETE BARRIER RAILING SHALL BE FULL COMPENSATION FOR FURNISHING ALL MATERIAL, EXCLUDING REINFORCING STEEL, AND ALL OF THE EQUIPMENT AND LABOR REQUIRED TO ERECT THE RAIL IN ACCORDANCE WITH THESE PLANS AND CURRENT SPECIFICATIONS.

THE JOINT SEALER SHALL BE LIGHT GRAY NONSAG LATEX CAULKING SEALER MARKETED FOR OUTDOOR USE. NO TESTING OR CERTIFICATION IS REQUIRED.

TOP OF THE BARRIER RAIL IS TO BE PARALLEL TO THE THEORETICAL ℄ GRADE.

CROSS SECTIONAL AREA OF THE STANDARD SECTION OF THE BARRIER RAIL = 2.84 SQUARE FEET.

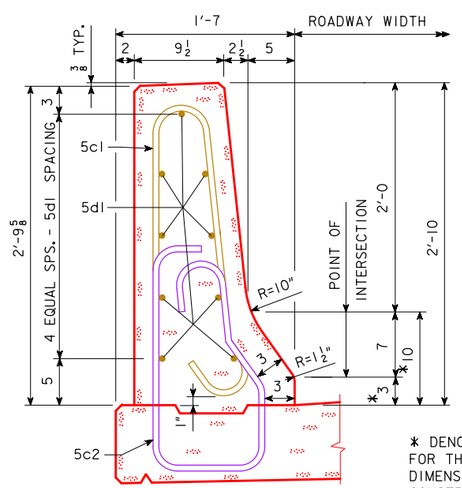

PART SECTION C-C

* DENOTES THE MAXIMUM VALUE FOR THIS DIMENSION. THIS DIMENSION MAY VARY DUE TO CONSTRUCTION INACCURACIES.

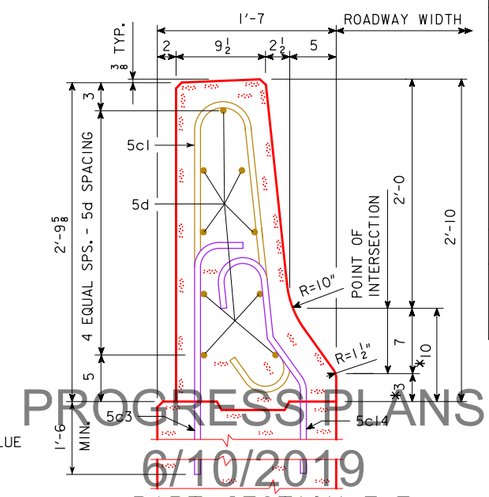

PART SECTION F-F

PROGRESS PLANS
6/10/2019

DESIGN FOR 0° SKEW

1097'-0 X 40'-0 PRETENSIONED PRESTRESSED CONCRETE BEAM E.B. BRIDGE

156'-0 END SPANS 157'-0 INTERIOR SPAN

NORTH BARRIER RAIL DETAILS

IA 2 STA. 400+85.00, RT. 32.00' JUNE 2019

FREMONT COUNTY

IOWA DEPARTMENT OF TRANSPORTATION - HIGHWAY DIVISION

DESIGN SHEET NO. 46 OF 2 FILE NO. 31719 DESIGN NO. 119

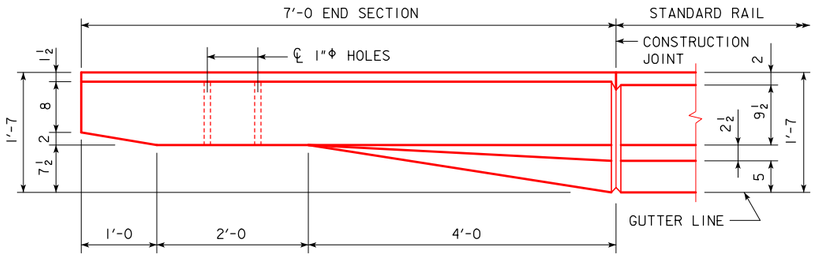

PART PLAN VIEW

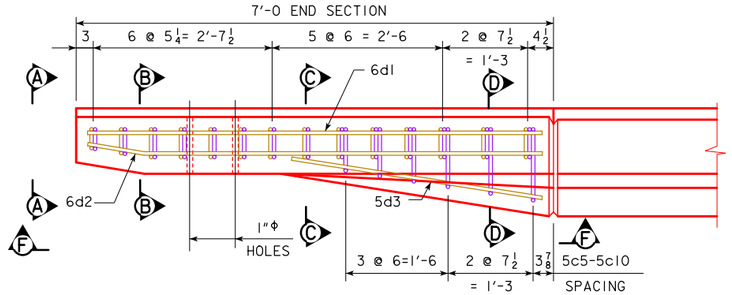

PART VIEW E-E

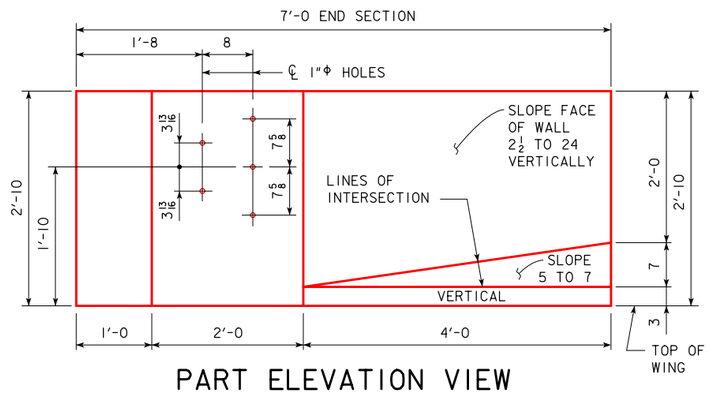

PART ELEVATION VIEW

PROVIDE 5 HOLES FORMED WITH 1"Φ PLASTIC CONDUIT. COST TO BE INCLUDED IN PRICE BID FOR CONCRETE BARRIER RAILING.

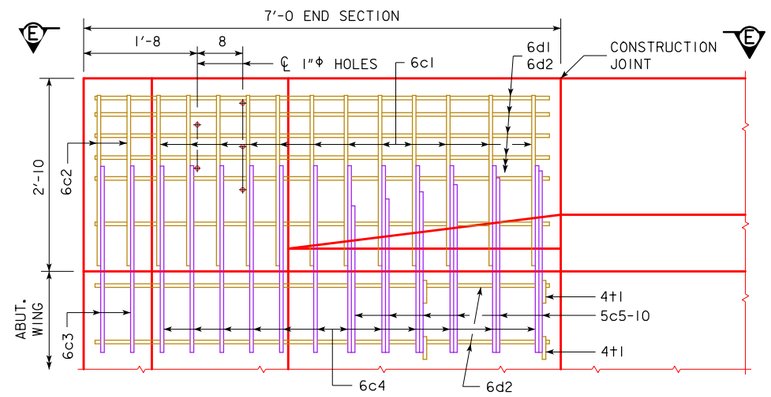

PART VIEW F-F

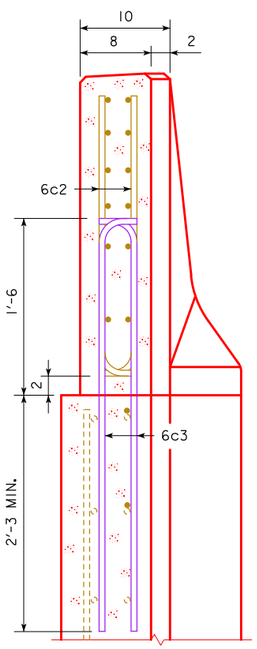

VIEW A-A

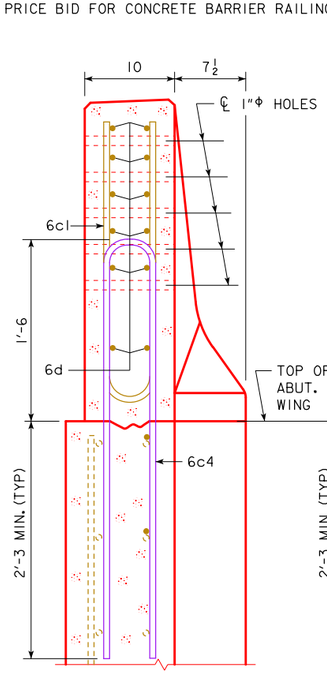

SECTION B-B

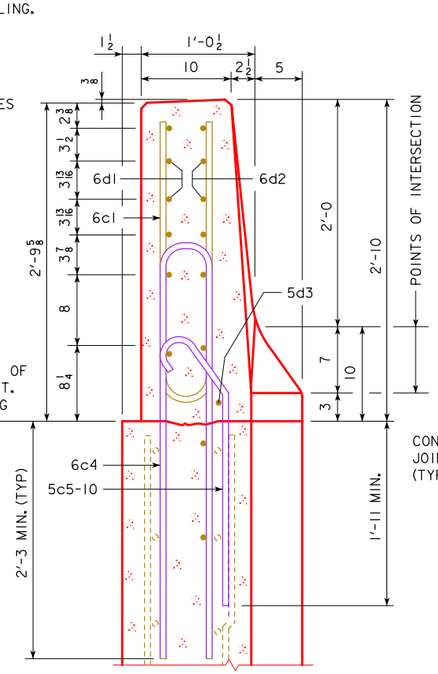

SECTION C-C

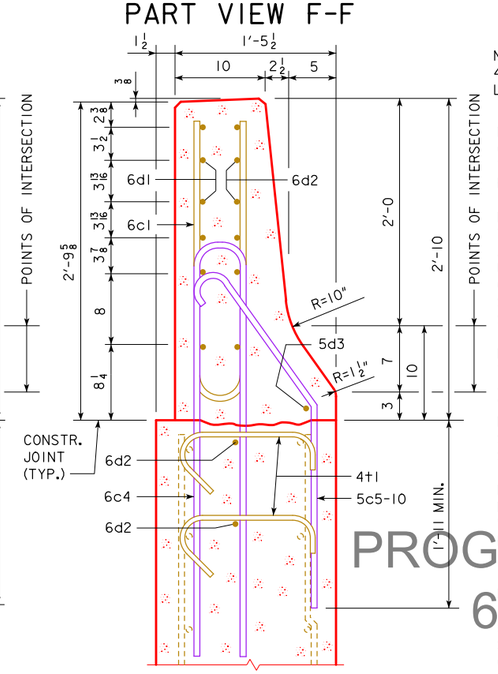

SECTION D-D

NOTE:
4t1 PLACEMENT- 2 BARS EACH LEVEL OF 6d2 IN WING FOOTING.

NOTE:
CONSTRUCTION JOINT BETWEEN TOP OF WING AND BARRIER RAIL IS ROUGHENED CONCRETE.

NOTE:
THE 10" RADIUS AND 1½" RADIUS ARE TYPICAL AND SHALL BE USED WHEN CONSTRUCTING THE CORNERS FOR VIEW A-A, SECTION B-B, SECTION C-C AND SECTION D-D.

NOTE:
THE 6c4, 6c3, 5c5-10, 2 - 6d2 AND 4t1 BARS ARE TO BE PLACED WITH THE ABUTMENT WING. THE DETAILS FOR PLACEMENT ARE SHOWN ON THE WING ABUTMENT SHEET.

NOTE:
DASHED LINES BELOW THE TOP OF WING ARE THE ABUTMENT WING REINFORCING STEEL. SEE WING ABUTMENT SHEET FOR PLACEMENT.

NOTE:
THIS SHEET APPLIES TO BARRIER END SECTIONS ON SW, NE, & SE WINGS. SEE DESIGN SHEET __ FOR BARRIER END SECTION DETAIL ON NW WING.

PROGRESS PRINTS
6/10/2019

EPOXY COATED REINF. STEEL - ONE END SECT.

BAR	LOCATION	SHAPE	NO.	LENGTH	WEIGHT
6c1	RAIL, VERTICAL		12	5'-6	99
6c2	RAIL, VERTICAL		4	2'-10	17
6d1	RAIL, HORIZONTAL		6	6'-8	60
6d2	RAIL, HORIZONTAL		8	6'-9	81
5d3	RAIL, HORIZONTAL		1	3'-9	4
4t1	RAIL, ABUTMENT WING TIE BARS		4	VARIES	5
				EPOXY REINF. TOTAL WEIGHT (LBS.)	266

STAINLESS STEEL REINF. STEEL - ONE END SECT.

BAR	LOCATION	SHAPE	NO.	LENGTH	WEIGHT
6c3	RAIL, VERTICAL		4	4'-1	25
6c4	RAIL, VERTICAL		12	8'-0	144
5c5-10	RAIL, VERTICAL		6	VARIES	23
				STAINLESS STEEL TOTAL WEIGHT (LBS.)	192

NOTE: REINFORCING STEEL QUANTITIES ARE INCLUDED ON THE SUMMARY QUANTITIES SHEET.

CONCRETE PLACEMENT SUMMARY

SECTION	TOTAL
BARRIER RAIL ONE END SECTION	0.65 CU. YD.

BENT BAR DETAILS

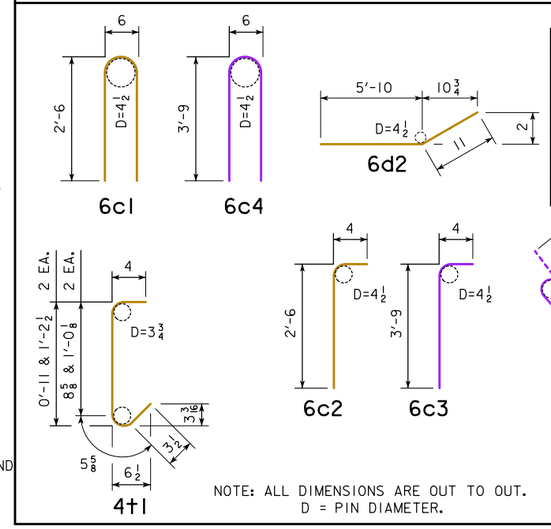

BAR	"X"
5c5	0'-6½
5c6	0'-8½
5c7	0'-10¼
5c8	1'-0¼
5c9	1'-2
5c10	1'-4

DESIGN FOR 0° SKEW

1097'-0 X 40'-0 PRETENSIONED PRESTRESSED CONCRETE BEAM E.B. BRIDGE

156'-0 END SPANS — 157'-0 INTERIOR SPAN

BARRIER RAIL END SECTION DETAILS

IA 2 STA. 400+85.00, RT. 32.00' — JUNE 2019

FREMONT COUNTY

IOWA DEPARTMENT OF TRANSPORTATION - HIGHWAY DIVISION

DESIGN SHEET NO. 47 OF ? FILE NO. 31719 DESIGN NO. 119

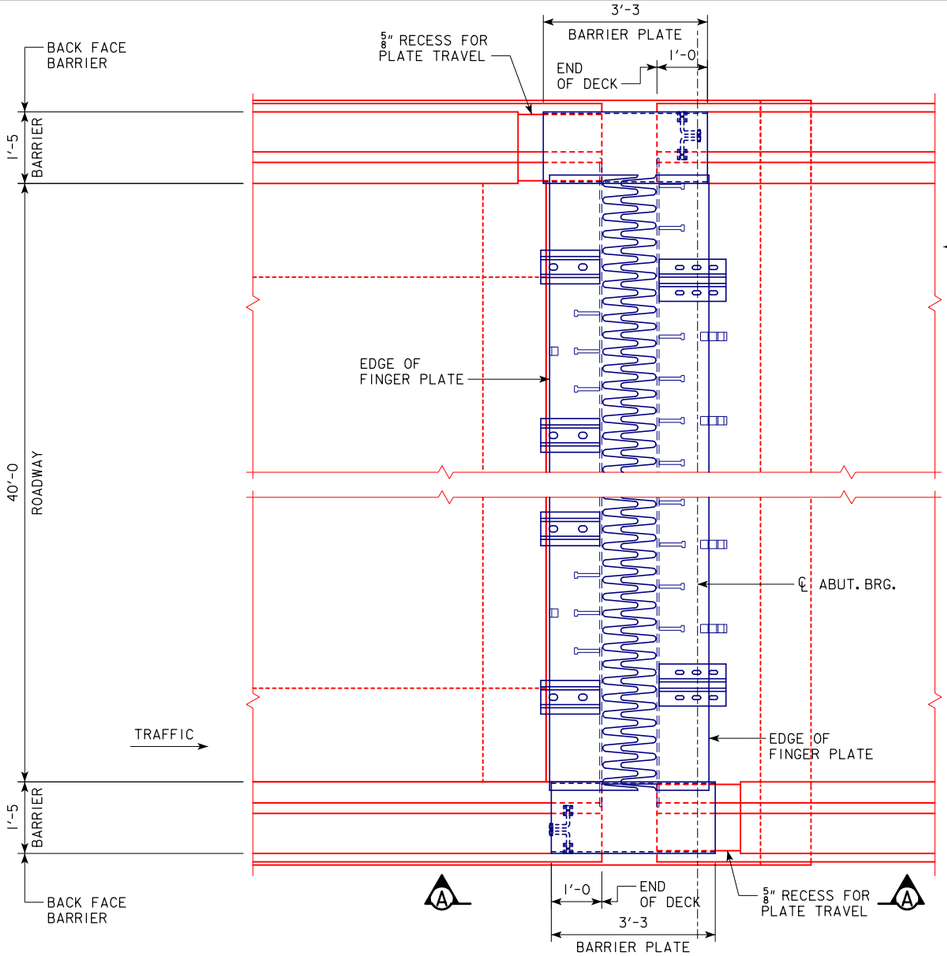

PART PLAN VIEW EXPANSION DEVICE

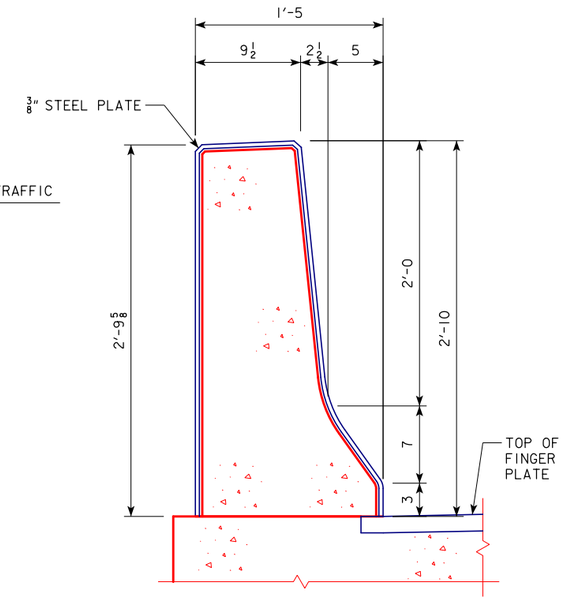

SECTION B-B

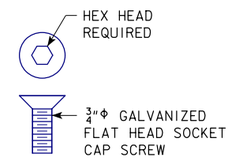

CAP SCREW DETAIL

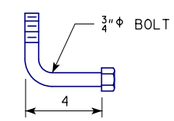

BENT BOLT DETAIL

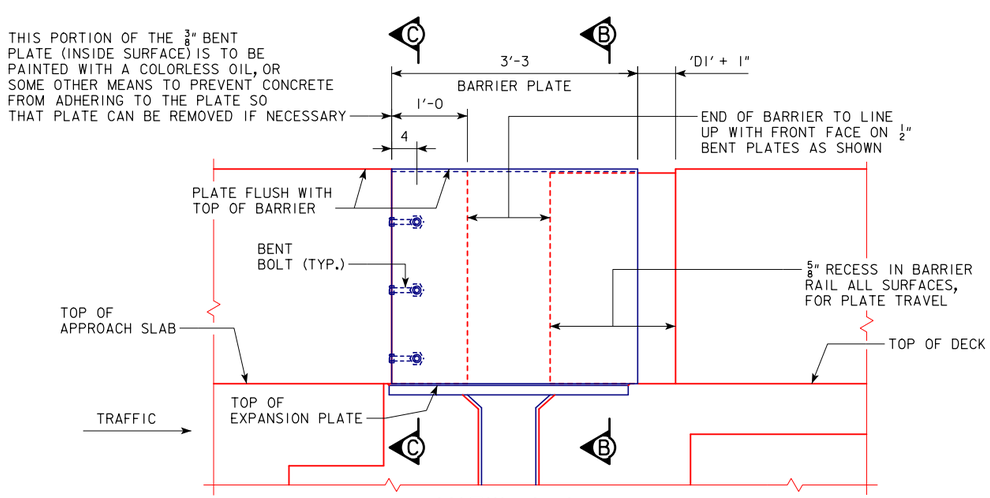

VIEW A-A

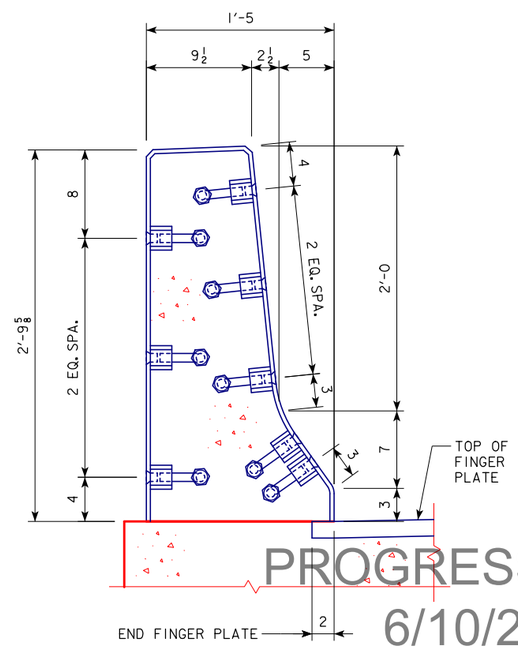

SECTION C-C

PROGRESS PLANS
6/10/2019

FINGER JOINT NOTES:

THE CONTRACTOR SHALL SUBMIT FOR APPROVAL SHOP DRAWINGS OF THE ENTIRE FINGER JOINT ASSEMBLY, BARRIER PLATES, NEOPRENE THROUGH AND CURTAIN SHOWING LAYOUT, MATERIAL TO BE USED, AND PROVISIONS FOR SECURELY HOLDING THE JOINT IN PLACE DURING PLACING OF CONCRETE. SHOP DRAWINGS SHALL INCLUDE PROVISIONS FOR STAGING CONSTRUCTION AS SHOWN IN THESE PLANS.

THE ENTIRE EXPANSION DEVICE SHALL BE GALVANIZED AFTER WELDING, EXCEPT HARDWARE DESIGNATED AS STAINLESS STEEL. THE ANCHORAGES, SHIMS, BOLTS, WASHERS, AND NUTS SHALL BE GALVANIZED.

THE TOP OF THE EXPANSION DEVICE SHALL BE RECESSED 1/4" BELOW THE TOP OF DECK, PARALLEL TO GRADE, AND MATCH THE ROADWAY CROSS-SLOPE.

CAP SCREWS SHALL BE COUNTERSUNK 1/16 INCH BELOW TOP OF PLATE.

THE MATERIAL USED FOR THE 2 x 2'-6 FINGER JOINT PLATES IS TO BE ASTM A572, GRADE 50 STEEL. ALL OTHER STRUCTURAL STEEL IS TO BE ASTM A709 GRADE 36 STEEL.

THE 3/8"Φ BOLTS AND WASHERS ATTACHING THE NEOPRENE CURTAIN TO THE 4 1/4 x 1/4 BENT PLATE AND THE 5/8"Φ BOLTS, NUTS AND WASHERS ATTACHING THE NEOPRENE TROUGH TO THE TROUGH HANGERS ARE TO BE ASTM A193 STAINLESS STEEL. ALL OTHER BOLTS SHALL MEET THE REQUIREMENTS OF ASTM A-307. THE PLATES, BOLTS, NUTS AND CAP SCREWS ARE TO BE GALVANIZED IN ACCORDANCE WITH ARTICLE 4100.07 OF THE STANDARD SPECIFICATIONS UNLESS OTHERWISE NOTED.

NOTES:

CONTRACTOR TO NOTE THAT THE CAP SCREW ANCHORAGE SYSTEM FOR THE 3/8" BARRIER PLATES ARE ALWAYS TO BE PLACED ON THE ONCOMING TRAFFIC SIDE.

IT IS INTENDED THAT THE 5/8" RECESSED AREA BE FORMED SO THAT WHEN THE 3/8" PLATE IS IN INSTALLED, THE PLATE WILL BE ABLE TO MOVE FREELY IN THIS RECESSED AREA.

SEE DESIGN SHEET 10 FOR BARRIER RAIL REINFORCING DETAILS.

* SEE DESIGN SHEET 17 FOR 'DI' VALUE.

DESIGN FOR 0° SKEW

1097'-0 X 40'-0 PRETENSIONED PRESTRESSED CONCRETE BEAM E.B. BRIDGE

156'-0 END SPANS — 157'-0 INTERIOR SPAN

BARRIER RAIL EXPANSION PLATES

IA 2 STA. 400+85.00, RT. 32.00' — JUNE 2019

FREMONT COUNTY

IOWA DEPARTMENT OF TRANSPORTATION - HIGHWAY DIVISION

DESIGN SHEET NO. 48 OF ? FILE NO. 31719 DESIGN NO. 119

BOSSED FOR	HOLE	FOR CONDUIT SIZE
5 THREADS	C	2"Φ RIGID STEEL
NONE	E	$\frac{1}{2}$"Φ COPPER PIPE

NOTE:
THE GROUNDING BUTTONS ARE TO BE BLIND DRILLED AND TAPPED FOR $\frac{3}{8}$"Φ x 0'-0$\frac{3}{4}$ BOLTS.

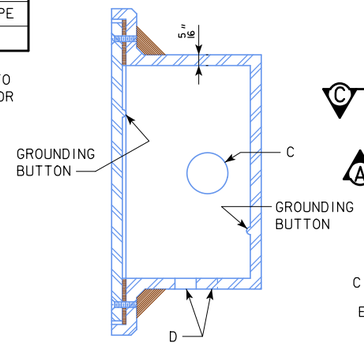

SECTION B-B

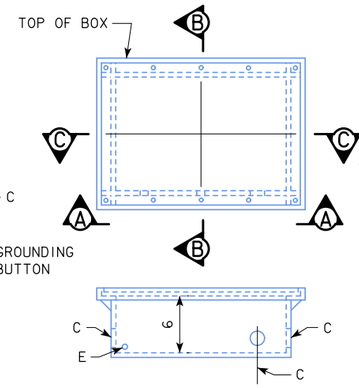

VIEW A-A

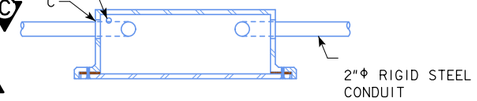

SECTION C-C

LI-104 JUNCTION BOX

WATERTIGHT, CAST IRON - FLUSH MOUNT

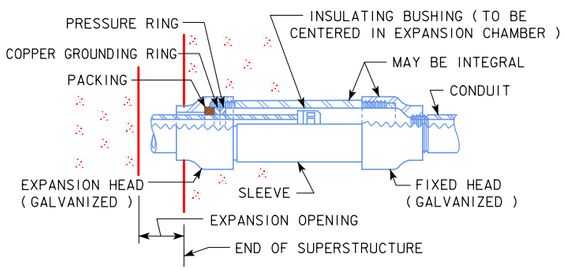

EXPANSION CHAMBER LENGTH IS 6" ???

EXPANSION FITTING DETAIL

(8 REQUIRED)

NOTES:

SEE LI-104 STANDARD ROAD PLAN FOR ADDITIONAL INFORMATION ON JUNCTION BOXES.

CONSTRUCTION SHALL CONFORM TO THE CURRENT IOWA D.O.T. STANDARD AND SUPPLEMENTAL SPECIFICATIONS AND SPECIAL PROVISIONS.

CONDUIT INSTALLATION SHALL BE IN ACCORDANCE WITH ARTICLE 2523.03, N, OF THE STANDARD SPECIFICATIONS.

ALL "C" ENTRANCE HOLES IN JUNCTION BOXES SHALL BE DRILLED AND TAPPED FOR THE SPECIFIED CONDUIT SIZE. ALL OTHER HOLES SHALL HAVE A CONCRETE - TIGHT SLIP FIT. CONDUIT ENDS SHALL NOT PROTRUDE INTO JUNCTION BOX MORE THAN $\frac{1}{4}$". DRAIN PIPE END SHALL BE FLUSH WITH INSIDE SURFACE OF BOX. GROUNDING BUTTONS SHALL BE LOCATED APPROXIMATELY 3" FROM THE INSIDE SURFACE OF THE BOX WALL, AND NOT CLOSER THAN 3" TO THE EDGE OF ANY HOLE IN THE BOX FLOOR. HOLES FOR DRAIN PIPE SHALL BE PLACED IN THE LOW CORNER OF THE BOX, WITH A MINIMUM CLEARANCE OF 1" BETWEEN THE EDGE OF THE HOLE AND THE INSIDE SURFACE OF THE BOX WALL. TYPICAL DETAILS ARE SHOWN ON THIS SHEET.

THE RIGID STEEL CONDUIT, JUNCTION BOXES AND FITTINGS INCLUDING LABOR AND ANY ADDITIONAL WORK TO DO THE INSTALLATION IS CONSIDERED INCIDENTAL TO THE COST OF THE RAILING.

EXPANSION FITTING SHALL BE AS SPECIFIED OR AS APPROVED BY THE ENGINEER. TYPICAL DETAILS ARE SHOWN ON THIS SHEET.

STAINLESS-STEEL REINFORCEMENT SHALL NOT BE ALLOWED TO BE IN CONTACT WITH THE UNCOATED REINFORCEMENT, BARE METAL FORMING HARDWARE, OR TO GALVANIZED ATTACHMENTS OR GALVANIZED CONDUIT.

PROGRESS PLANS
6/10/2019

DESIGN FOR 0° SKEW
1097'-0 X 40'-0 PRETENSIONED PRESTRESSED CONCRETE BEAM E.B. BRIDGE
156'-0 END SPANS 157'-0 INTERIOR SPAN
CONDUIT DETAILS
IA 2 STA. 400+85.00, RT. 32.00' JUNE 2019
FREMONT COUNTY
IOWA DEPARTMENT OF TRANSPORTATION - HIGHWAY DIVISION
DESIGN SHEET NO. 49 OF ? FILE NO. 31719 DESIGN NO. 119

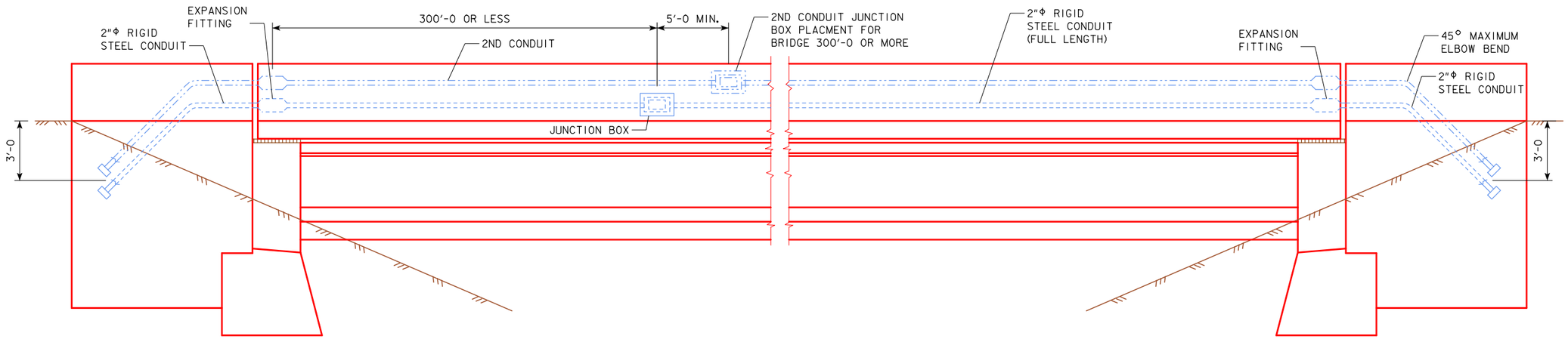

EXTERIOR BRIDGE BARRIER ELEVATION

SOUTH BARRIER RAIL, LOOKING NORTH

I.T.S CONDUIT NOTES:

I.T.S. CONDUIT SHALL BE LIMITED TO SIX 45° ELBOW BENDS FOR A CABLE PULL FROM HANDHOLE TO HANDHOLE.

RIGID STEEL CONDUIT FOR I.T.S. APPLICATIONS SHALL BE INSTALLED AND PREPARED TO FACILITATE INSTALLATION OF FIBER OPTIC CABLE.

THE MINIMUM INSIDE BEND RADIUS FOR RIGID STEEL CONDUIT USED FOR I.T.S. APPLICATIONS SHALL BE 18".

RIGID STEEL CONDUIT FOR I.T.S. APPLICATIONS SHALL BE CUT AND THREADED TO ELIMINATE EXPOSED THREADS AFTER COMPLETING THE CONNECTIONS; ALL COUPLINGS SHALL BE TIGHTENED UNTIL THE CONDUIT ENDS MEET TO ALLOW A CONTINUOUS INNER SURFACE THROUGHOUT THE ENTIRE LENGTH OF THE CONDUIT RUN. NIPPLES SHOULD BE USED TO ELIMINATE CUTTING AND THREADING SHORT LENGTHS OF CONDUIT.

ALL BURRS AND ROUGHENED SURFACES SHALL BE REMOVED FROM CONDUITS AND FITTINGS. ALL CONDUIT RUNS SHALL BE REAMED, CLEANED AND SWABBED FOR INSTALLATION OF FIBER OPTIC CABLE.

ONLY GALVANIZED FITTINGS SHALL BE USED WITH RIGID STEEL CONDUIT. DAMAGED GALVANIZED SURFACES OF RIGID STEEL CONDUIT OR FITTINGS SHALL BE PAINTED WITH AN ACCEPTABLE ZINC-RICH PAINT.

I.T.S. CONDUIT SHALL INCLUDE A POLYPROPYLENE PULL ROPE BETWEEN HANDHOLES WITH A MINIMUM 600 POUND TENSILE STRENGTH.

I.T.S. RIGID STEEL CONDUIT, PULL ROPES AND FITTINGS, INCLUDING LABOR AND ANY ADDITIONAL WORK FOR INSTALLATION IS CONSIDERED INCIDENTAL TO THE COST OF THE RAILING.

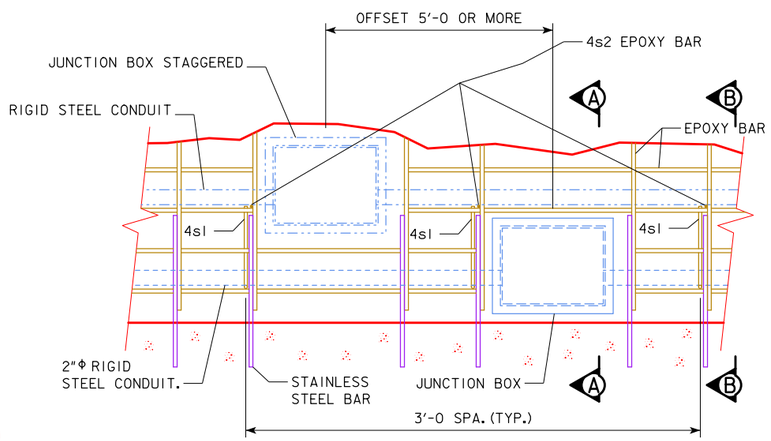

CONDUIT SUPPORT - RAIL ELEV. DETAIL

TWO JUNCTION BOX DETAIL - ADJUST REINFORCING TO CLEAR JUNCTION BOX. JUNCTION BOXES ARE TO BE PLACED NO FURTHER THAN 300'-0 APART.

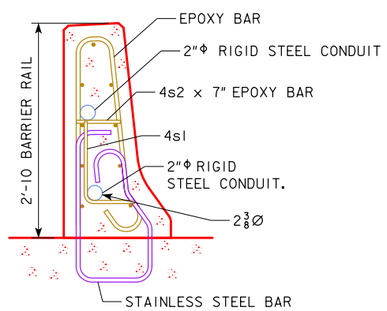

SECTION B-B - CONDUIT SUPPORT

ONLY USED IN RAIL WITH CONDUIT, USE 3'-0 SPACING. GALVANIZED CONDUIT SHALL NOT COME INTO CONTACT WITH THE STAINLESS STEEL REINFORCING. LOWER CONDUIT CAN ONLY BE 2" DIAMETER.

(377 REQUIRED)

EPOXY REINFORCING STEEL-ONE RAIL

BAR	LOCATION	SHAPE	NO.	LENGTH	WEIGHT
4s1	RAIL CONDUIT		377	1'-9	441
4s2	RAIL CONDUIT (OPTIONAL)		377	7	147
		TOTAL WEIGHT (LBS.)			588

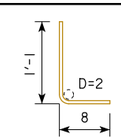

4s1

NOTE: ALL DIMENSIONS ARE OUT TO OUT. D = PIN DIAMETER.

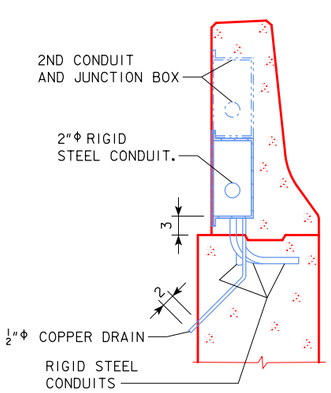

SECTION A-A THRU JUNCTION BOX

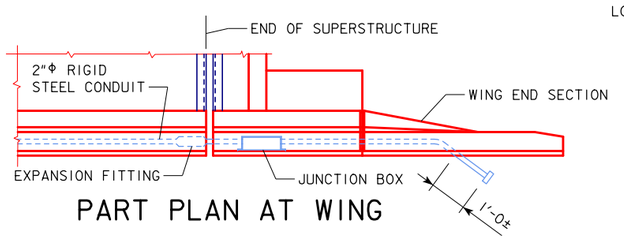

PART PLAN AT WING

PROGRESS PLANS
6/10/2019

DESIGN FOR 0° SKEW

1097'-0 X 40'-0 PRETENSIONED PRESTRESSED CONCRETE BEAM E.B. BRIDGE

156'-0 END SPANS 157'-0 INTERIOR SPAN

CONDUIT DETAILS

IA 2 STA. 400+85.00, RT. 32.00' JUNE 2019

FREMONT COUNTY

IOWA DEPARTMENT OF TRANSPORTATION - HIGHWAY DIVISION

DESIGN SHEET NO. 50 OF 2 FILE NO. 31719 DESIGN NO. 119

BENCH MARK:

SUBDRAIN NOTES:

THIS PLAN SHEET SHOWS DETAILS FOR PLACING ALL SUBDRAINS AND SUBDRAIN OUTLETS REQUIRED FOR THIS STRUCTURE.

THE SUBDRAINS SHALL BE 4" IN DIAMETER AND SHALL BE IN ACCORDANCE WITH ARTICLE 4143.01, B, OF THE STANDARD SPECIFICATIONS.

THE SUBDRAIN OUTLET SHALL CONSIST OF A LENGTH OF PIPE WITH A REMOVABLE RODENT GUARD AS DETAILED ON THIS SHEET. THE LENGTH OF THE OUTLET PIPE SHALL BE DETERMINED BY THE REVETMENT AND IT'S PLACEMENT LOCATION. THE CONTRACTOR IS TO INSURE THE OUTLET PIPE IS ADEQUATELY STRONG ENOUGH AND WILL NOT BE DAMAGED WHEN REVETMENT IS PLACED. A CHECK WILL BE MADE AT THE SUBDRAIN OUTLET TO INSURE THAT THE SUBDRAIN IS NOT DAMAGED AND IS DRAINING PROPERLY DURING THE BACKFILL FLOODING PROCESS. IF A METAL OUTLET PIPE IS USED, IT SHALL BE 6 INCHES IN DIAMETER AND COUPLED TO THE 4 INCH DIAMETER SUBDRAIN IN ONE OF THE TWO FOLLOWING WAYS.

1. USE AN INSIDE FIT REDUCER COUPLER (COUPLER MUST BE INSERTED A MINIMUM OF 1'-0 INTO THE METAL OUTLET PIPE).
2. INSERT 1'-0 OF THE 4"Φ SUBDRAIN INTO THE 6"Φ METAL OUTLET PIPE, THEN FULLY SEAL THE ENTIRE OPENING WITH GROUT.

THE COST OF FURNISHING AND PLACING SUBDRAIN (INCLUDING EXCAVATION), GRANULAR BACKFILL, POROUS BACKFILL, AND SUBDRAIN OUTLET IS TO BE INCLUDED IN THE PRICE BID FOR "STRUCTURAL CONCRETE (BRIDGE)". NO EXTRA PAYMENT WILL BE MADE.

THE DIMENSIONS SHOWN FOR THE PROPOSED SUBDRAINS ARE BASED ON THE PROPOSED GRADING LAYOUT OF BRIDGE BERMS. THE DIMENSIONS SHOWN ARE FOR ESTIMATING ONLY. REQUIRED LENGTHS AND GENERAL LOCATIONS OF SUBDRAINS ARE SUBJECT TO CHANGE DUE TO FIELD ADJUSTMENTS OF THE GRADING LAYOUT.

SUBDRAIN OUTLET ELEVATIONS

LOCATION	ELEVATION
WEST ABUTMENT	933.25
EAST ABUTMENT	933.94

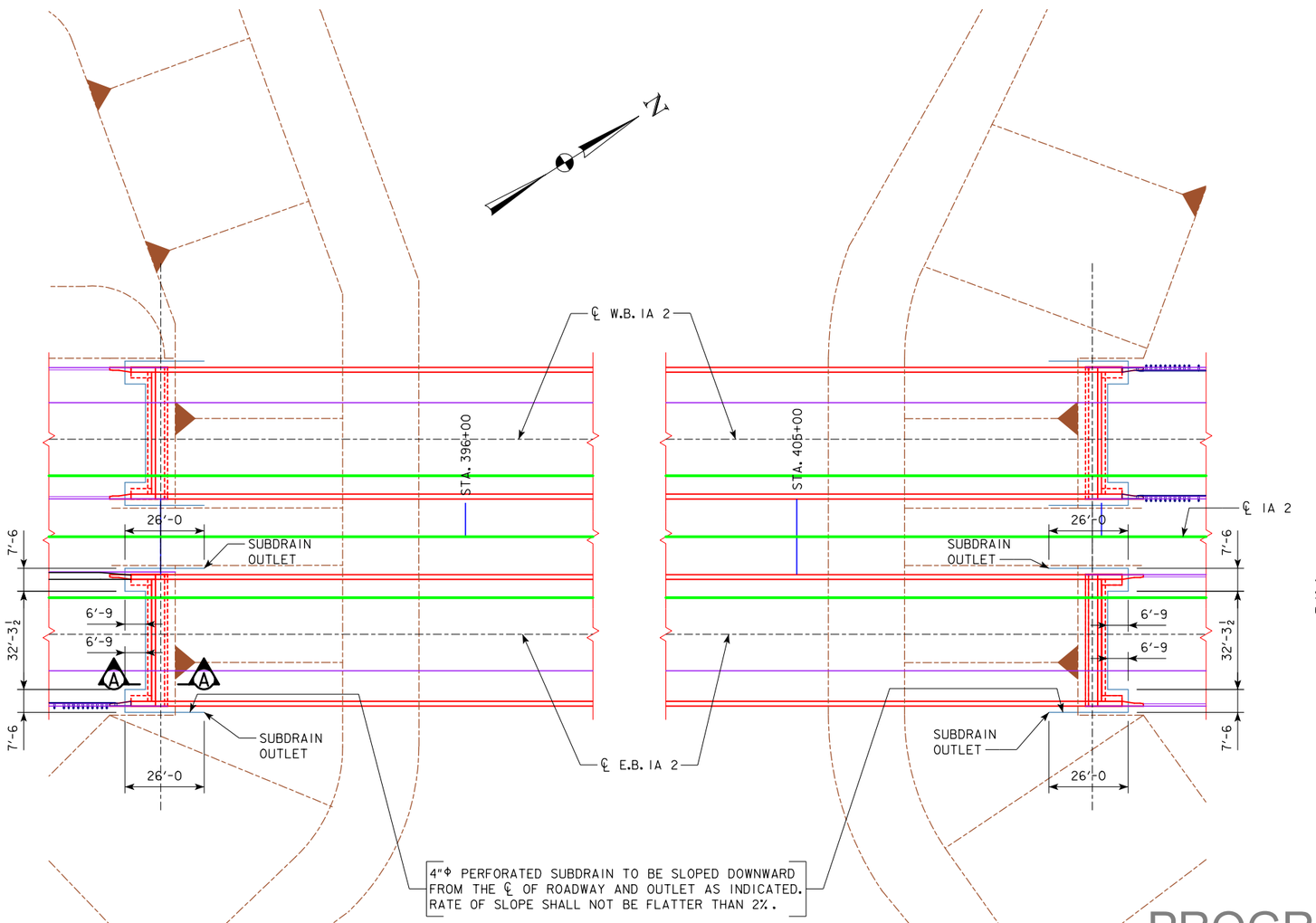

SITUATION PLAN

SHOWING SUBDRAIN LOCATIONS

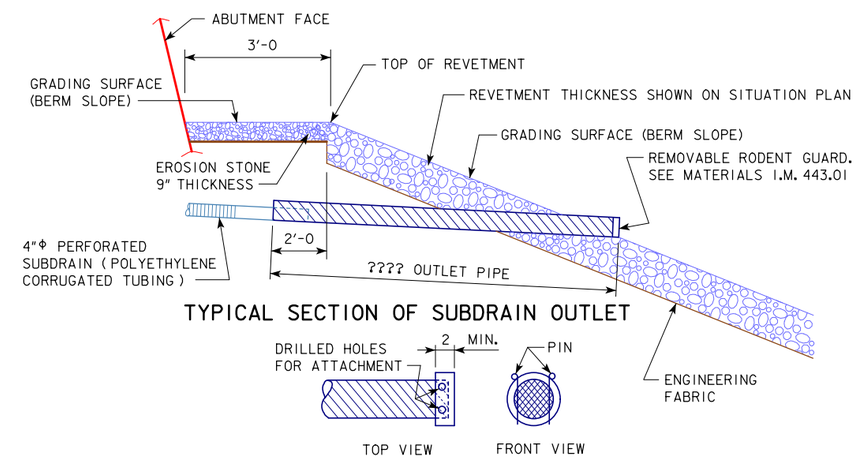

TYPICAL SECTION OF SUBDRAIN OUTLET

REMOVABLE RODENT GUARD DETAILS

REVETMENT STONE (EMBEDDED) OUTLET DETAILS

PROGRESS PLANS
6/10/2019

NOTE:
SECTION A-A IS SHOWN ON ABUTMENT BACKFILL DETAILS SHEET.

DESIGN FOR 0° SKEW

1097'-0 X 40'-0 PRETENSIONED PRESTRESSED CONCRETE BEAM E.B. BRIDGE

156'-0 END SPANS 157'-0 INTERIOR SPAN

SUBDRAIN DETAILS

IA 2 STA. 400+85.00, RT. 32.00' JUNE 2019

FREMONT COUNTY

IOWA DEPARTMENT OF TRANSPORTATION - HIGHWAY DIVISION

DESIGN SHEET NO. 51 OF 2 FILE NO. 31719 DESIGN NO. 119

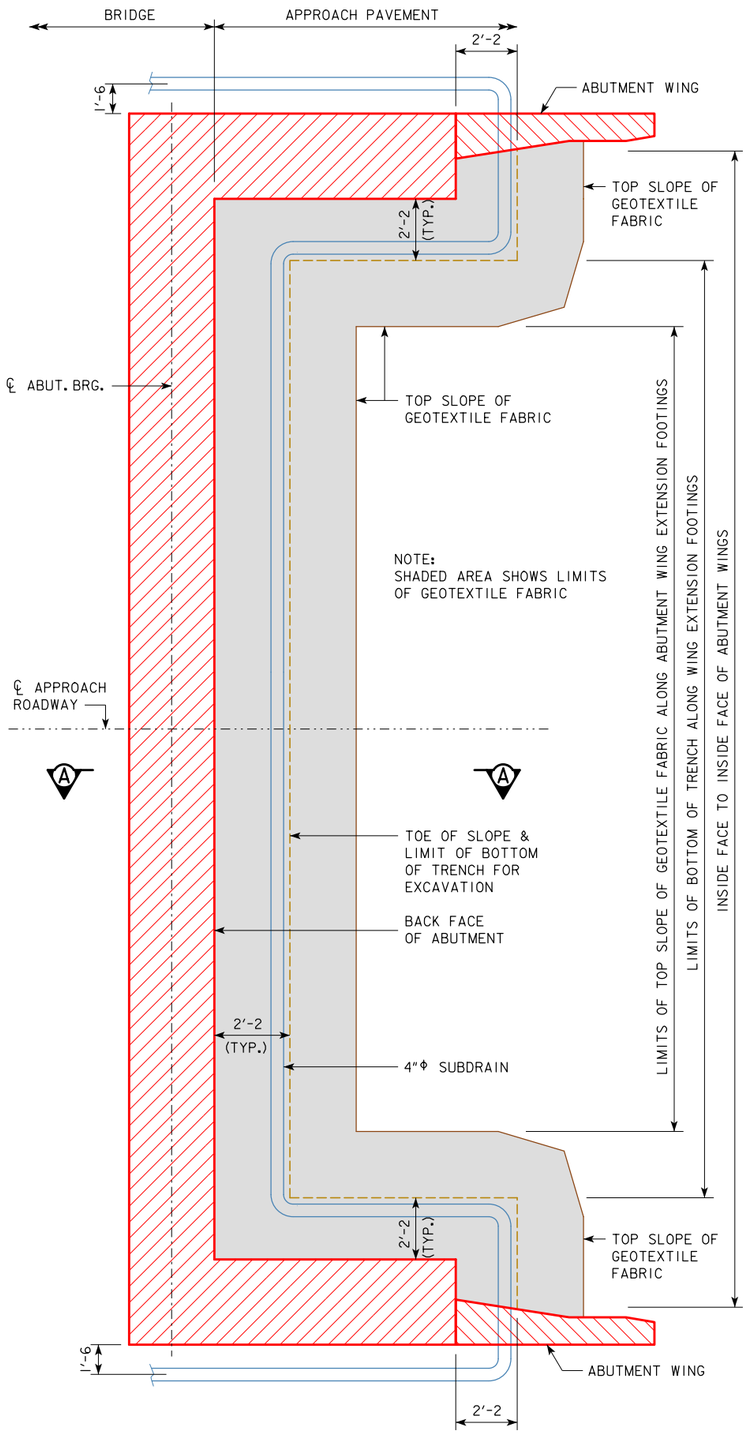

ABUTMENT PLAN WITH WING EXTENSIONS

ABUTMENT BACKFILL PROCESS:

THE BASE OF THE EXCAVATION SUBGRADE BEHIND THE ABUTMENT IS TO BE GRADED WITH A 4% SLOPE AWAY FROM THE ABUTMENT FOOTING AND A 2% CROSS SLOPE IN THE DIRECTION OF THE SUBDRAIN OUTLET. THIS EXCAVATION SHAPING IS TO BE DONE PRIOR TO BEGINNING INSTALLATION OF THE GEOTEXTILE AND BACKFILL MATERIAL.

AFTER THE SUBGRADE HAS BEEN SHAPED, THE GEOTEXTILE FABRIC SHALL BE INSTALLED IN ACCORDANCE WITH THE DETAILS SHOWN. THE FABRIC IS INTENDED TO BE INSTALLED IN THE BASE OF THE EXCAVATION AND EXTENDED VERTICALLY UP THE ABUTMENT BACKWALL, ABUTMENT WING WALLS, AND EXCAVATION FACE TO A HEIGHT THAT WILL BE APPROXIMATELY 1 TO 2 FOOT HIGHER THAN THE HEIGHT OF THE POROUS BACKFILL PLACEMENT AS SHOWN IN THE "BACKFILL DETAILS" ON THIS SHEET. THE STRIPS OF THE FABRIC PLACED SHALL OVERLAP APPROXIMATELY 1 FOOT AND SHALL BE PINNED IN PLACE. THE FABRIC SHALL BE ATTACHED TO THE ABUTMENT BY USING LATH FOLDED IN THE FABRIC AND SECURED TO THE CONCRETE WITH SHALLOW CONCRETE NAILS. THE FABRIC PLACED AGAINST THE EXCAVATION FACE SHALL BE PINNED.

WHEN THE FABRIC IS IN PLACE, THE SUBDRAIN SHALL BE INSTALLED DIRECTLY ON THE FABRIC AT THE TOE OF THE REAR EXCAVATION SLOPE. A SLOT WILL NEED TO BE CUT IN THE FABRIC AT THE POINT WHERE THE SUBDRAIN EXITS THE FABRIC NEAR THE END OF THE ABUTMENT WING WALL.

POROUS BACKFILL IS THEN PLACED AND LEVELED, NO COMPACTION IS REQUIRED.

THE REMAINING WORK INVOLVES BACKFILLING WITH FLOODABLE BACKFILL, SURFACE FLOODING, AND VIBRATORY COMPACTION. THE FLOODABLE BACKFILL MATERIAL SHALL BE IN ACCORDANCE WITH THE STANDARD SPECIFICATIONS. THE FLOODABLE BACKFILL SHALL BE PLACED IN INDIVIDUAL LIFTS, SURFACE FLOODED, AND COMPACTED WITH VIBRATORY COMPACTION TO ENSURE FULL CONSOLIDATION. LIMIT THE LOOSE LIFTS TO NO MORE THAN 2 FEET OF THICKNESS.

START SURFACE FLOODING FOR EACH FLOODABLE BACKFILL LIFT AT THE HIGH POINT OF THE SUBDRAIN AND PROGRESS TO THE LOW POINT WHERE THE SUBDRAIN EXITS THE FABRIC. TO ENSURE UNIFORM SURFACE FLOODING, WATER RUNNING FULL IN A 2-INCH DIAMETER HOSE SHOULD BE SPRAYED IN SUCCESSIVE 6-FOOT TO 8-FOOT INCREMENTS FOR 5 MINUTES WITHIN EACH INCREMENT.

FLOODABLE BACKFILL LIFT PLACEMENT, FLOODING, AND COMPACTION SHALL PROGRESS UNTIL THE REQUIRED FULL THICKNESS OF THE ABUTMENT BACKFILL HAS BEEN COMPLETED.

WATER REQUIRED FOR FLOODING, SUBDRAINS, POROUS BACKFILL, FLOODABLE BACKFILL, AND GEOTEXTILE FABRIC FURNISHED AT THE BRIDGE ABUTMENTS WILL NOT BE MEASURED SEPARATELY FOR PAYMENT.

THE COST OF WATER REQUIRED FOR FLOODING, SUBDRAINS, POROUS BACKFILL, FLOODABLE BACKFILL, AND GEOTEXTILE FABRIC FURNISHED AT THE BRIDGE ABUTMENTS SHALL BE INCLUDED IN THE CONTRACT UNIT PRICE BID FOR STRUCTURAL CONCRETE.

NOTE:

SUBDRAIN SHALL SLOPE DOWNWARD 2% FROM ℄ APPROACH ROADWAY WHEN OUTLETTING BOTH SIDES OF THE ABUTMENT.

THE GEOTEXTILE FABRIC SHALL BE IN ACCORDANCE WITH ARTICLE 4196.01, B, 6 OF THE STANDARD SPECIFICATIONS. IF THE ENGINEERING FABRIC IS LAPPED THE LAPS SHALL BE A MINIMUM OF ONE FOOT IN LENGTH, SHINGLE FASHION WITH UP SLOPE LAP PIECE ON TOP AND STAPLED FOR CONTINUITY.

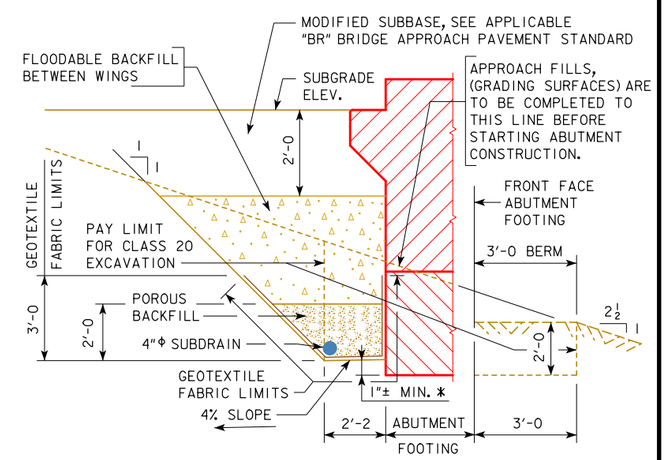

SECTION A-A

BACKFILL DETAILS

NOTE: GEOTEXTILE FABRIC WILL BE ATTACHED TO FACE OF ABUTMENT FOOTING AND WINGS.

* DIMENSION VARIES DUE TO 2% SUBDRAIN SLOPE.

PROGRESS PLANS
6/10/2019

NOTE:
SEE SUBDRAIN DETAILS SHEET FOR DETAILS NOT SHOWN ON THIS SHEET WHICH ARE PERTINENT TO THIS STRUCTURE.

DESIGN FOR 0° SKEW

1097'-0 X 40'-0 PRETENSIONED PRESTRESSED CONCRETE BEAM E.B. BRIDGE

156'-0 END SPANS 157'-0 INTERIOR SPAN

ABUTMENT BACKFILL DETAILS

IA 2 STA. 400+85.00, RT. 32.00' JUNE 2019

FREMONT COUNTY

IOWA DEPARTMENT OF TRANSPORTATION - HIGHWAY DIVISION

DESIGN SHEET NO. 52 OF ? FILE NO. 31719 DESIGN NO. 119

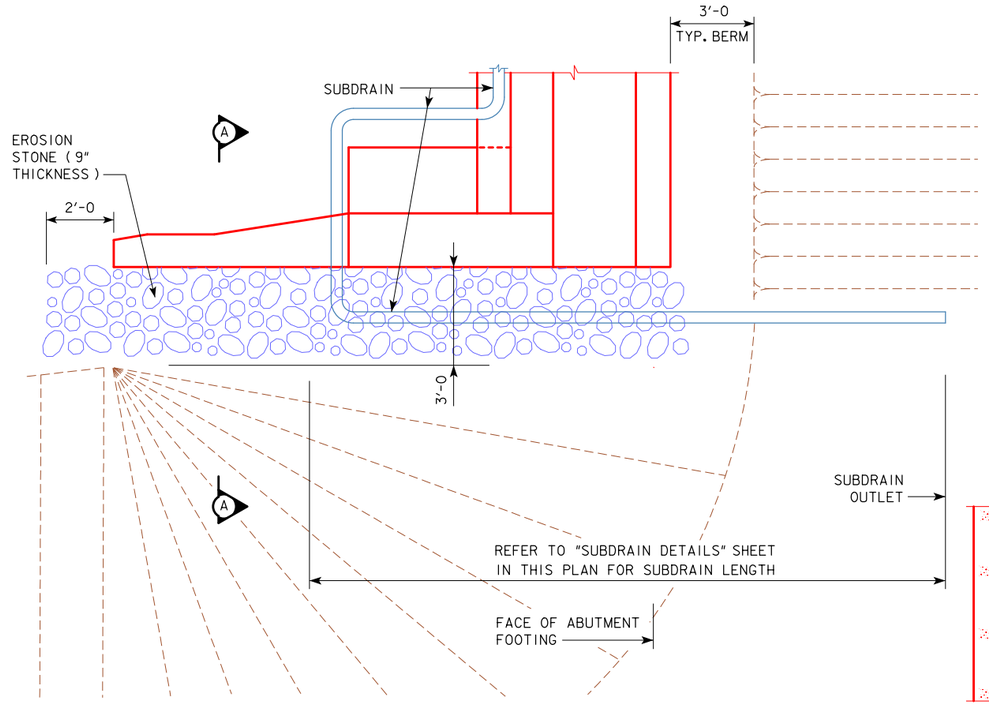

TOP VIEW OF WING ARMORING WITH WING EXTENSION

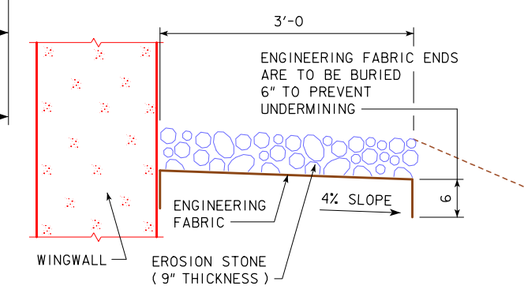

SECTION A-A

GENERAL NOTES:

EROSION STONE SHALL BE PLACED ALONG THE SIDES OF THE WINGS AND ABUTMENT FOOTING AS SHOWN IN SECTION A-A. THIS IS TYPICAL AT EACH CORNER OF THE BRIDGE UNLESS OTHERWISE NOTED IN THE PLANS. THE EROSION STONE AT THESE LOCATIONS SHALL BE UNDERLAYED WITH ENGINEERING FABRIC IN ACCORDANCE WITH ARTICLE 4196.01, B, 3, OF THE STANDARD SPECIFICATIONS.

THE EROSION STONE SHALL BE IN ACCORDANCE WITH SECTION 4130, OF THE STANDARD SPECIFICATIONS. MATERIAL PASSING THE 3 INCH SCREEEN BUT 100% RETAINED ON A 1 INCH SCREEN MAY BE USED AS CHOKE STONE.

THE EROSION STONE SHALL BE DEPOSITED, SPREAD, CONSOLIDATED AND SHAPED BY MECHANICAL OR HAND METHODS THAT WILL PROVIDE UNIFORM 9" DEPTH AND DENSITY AND PROVIDE UNIFORM SURFACE APPEARANCE.

PAYMENT FOR THE BRIDGE WING ARMORING WILL BE BID PER SQUARE YARD. COST WILL INCLUDE ENGINEERING FABRIC, EROSION STONE, EXCAVATION, SHAPING, AND COMPACTION TO DIMENSIONS SHOWN IN THESE PLANS. BID ITEM SHALL BE "BRIDGE WING ARMORING - EROSION STONE".

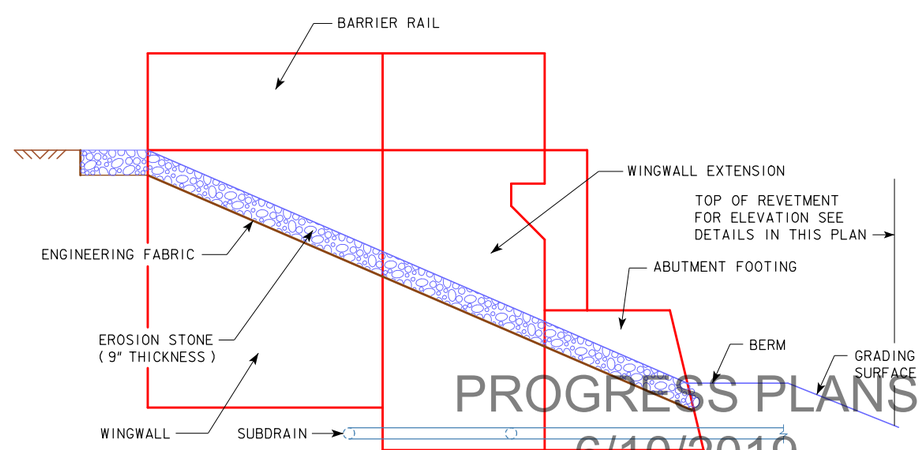

PROGRESS PLANS
6/10/2019

PROFILE VIEW OF WING ARMORING WITH WING EXTENSION

(STUB ABUTMENT WITH WING EXTENSIONS)

DESIGN FOR 0° SKEW

1097'-0 X 40'-0 PRETENSIONED PRESTRESSED CONCRETE BEAM E.B. BRIDGE

156'-0 END SPANS 157'-0 INTERIOR SPAN

BRIDGE WING ARMORING

IA 2 STA. 400+85.00, RT. 32.00' JUNE 2019

FREMONT COUNTY

IOWA DEPARTMENT OF TRANSPORTATION - HIGHWAY DIVISION

DESIGN SHEET NO. 53 OF ? FILE NO. 31719 DESIGN NO. 119

DESIGN TEAM Stanley Consultants Inc.	BRIDGE WING ARMORING - WATER CROSSING	STANDARD SHEET 1005A	FREMONT COUNTY	PROJECT NUMBER NHSX-002-1(123)--3H-36	SHEET NUMBER 54

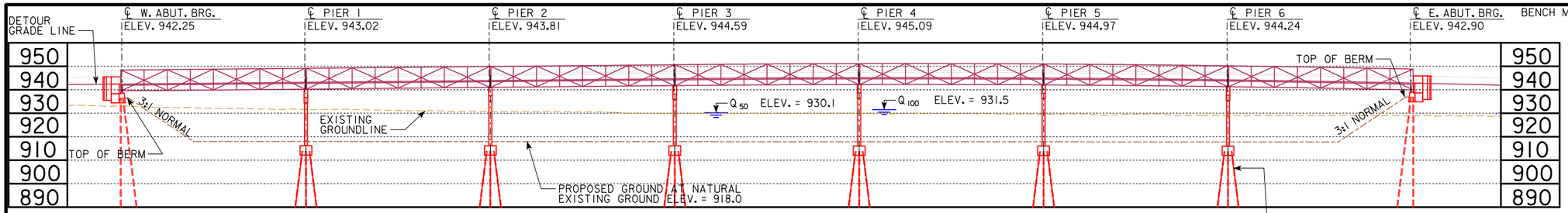

LONGITUDINAL SECTION ALONG ℄ TEMPORARY BRIDGE

(VERTICAL SCALE 2:1)

BENCH MARK NO.

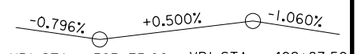

VPI STA. = 393+75.00
VPI ELEV. = 941.62
VC = 150'

VPI STA. = 402+87.50
VPI ELEV. = 946.18
VC = 625'

PROPOSED PROFILE IA 2 DETOUR

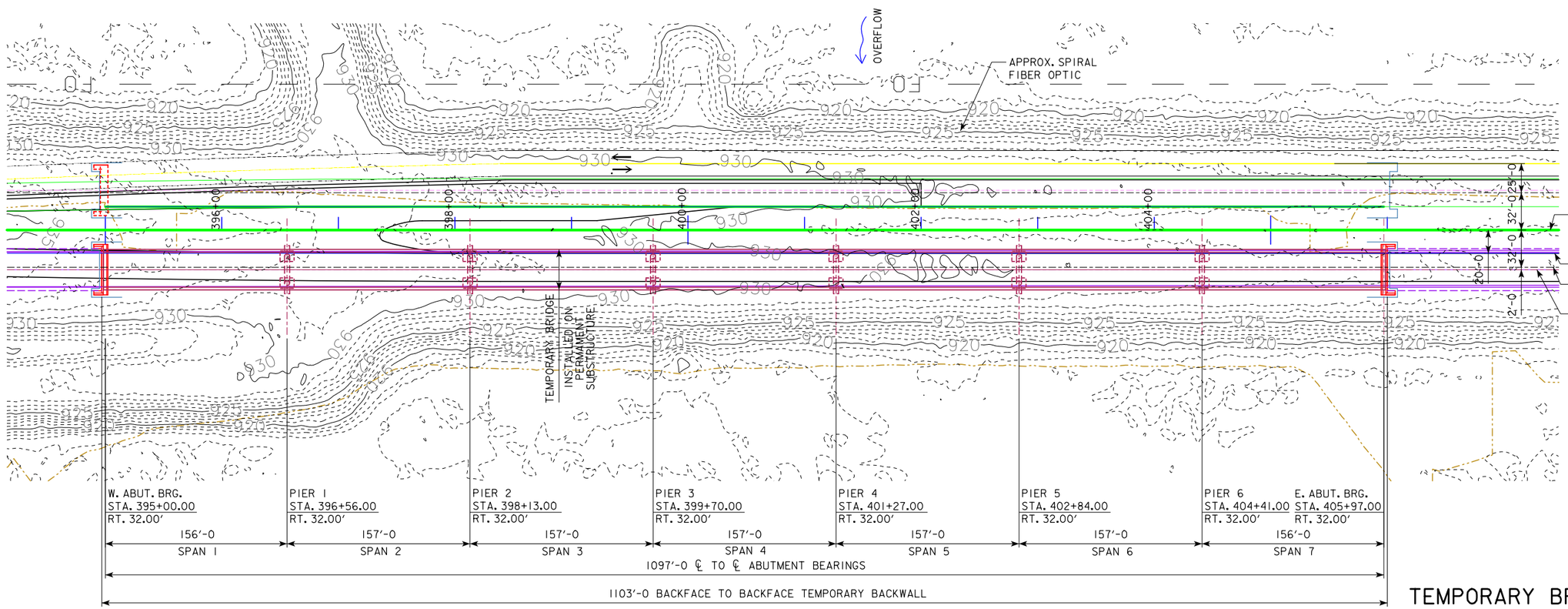

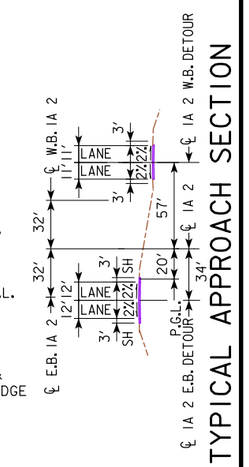

TYPICAL APPROACH SECTION

TEMPORARY BRIDGE SITUATION PLAN

TEMPORARY BRIDGE NOTES:

1. SEE SPECIAL PROVISION "TEMPORARY BRIDGE SUPERSTRUCTURE" FOR NOTES, DETAILS, AND BID ITEMS.
2. ALL UNITS ARE IN FEET UNLESS OTHERWISE NOTED.
3. TL-4 BRIDGE RAILING PROPOSED.
4. PIER TYPE - 2 COLUMN FRAME PIERS OR PILE BENTS.

UTILITIES LEGEND:

— FO — SPIRAL FIBER OPTIC

0 ENGLISH 100
SCALE IN FEET

N

PROGRESS PLANS
6/10/2019

DESIGN FOR 0° SKEW

1097'-0 X 40'-0 PRETENSIONED PRESTRESSED CONCRETE BEAM E.B. BRIDGE

156'-0 END SPANS 157'-0 INTERIOR SPAN

TEMPORARY BRIDGE DETAILS

IA 2 STA. 400+85.00, RT. 32.00' JUNE 2019

FREMONT COUNTY

IOWA DEPARTMENT OF TRANSPORTATION - HIGHWAY DIVISION

DESIGN SHEET NO. 54 OF 2 FILE NO. 31719 DESIGN NO. 119

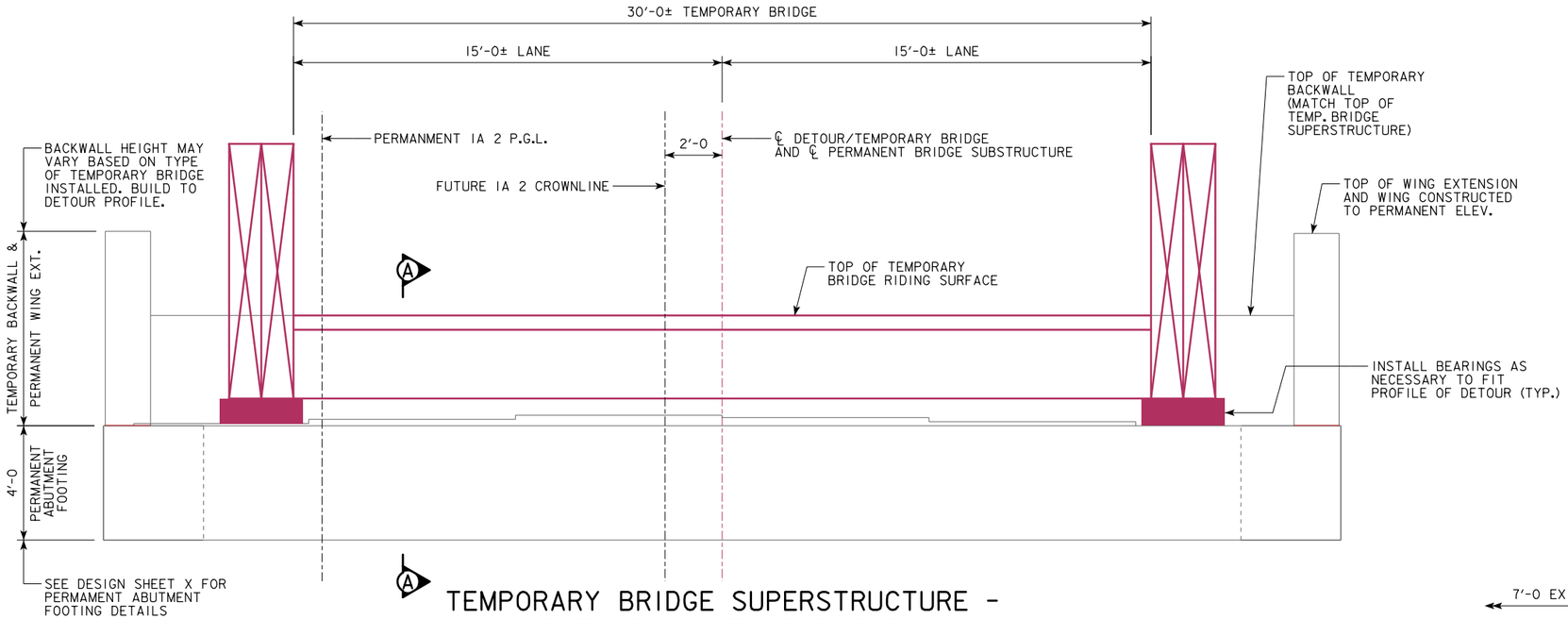

TEMPORARY BRIDGE SUPERSTRUCTURE - ELEVATION AT ABUTMENT

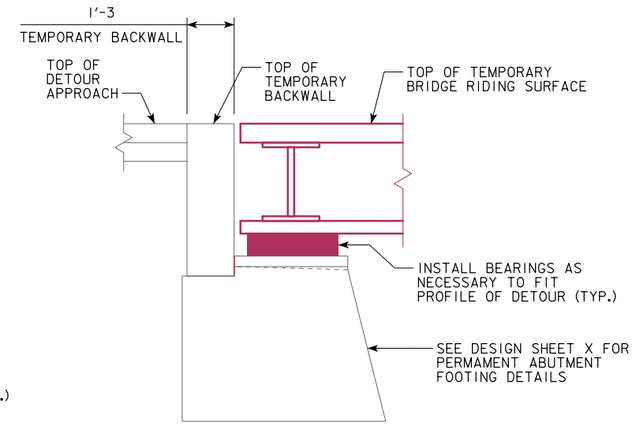

SECTION A-A

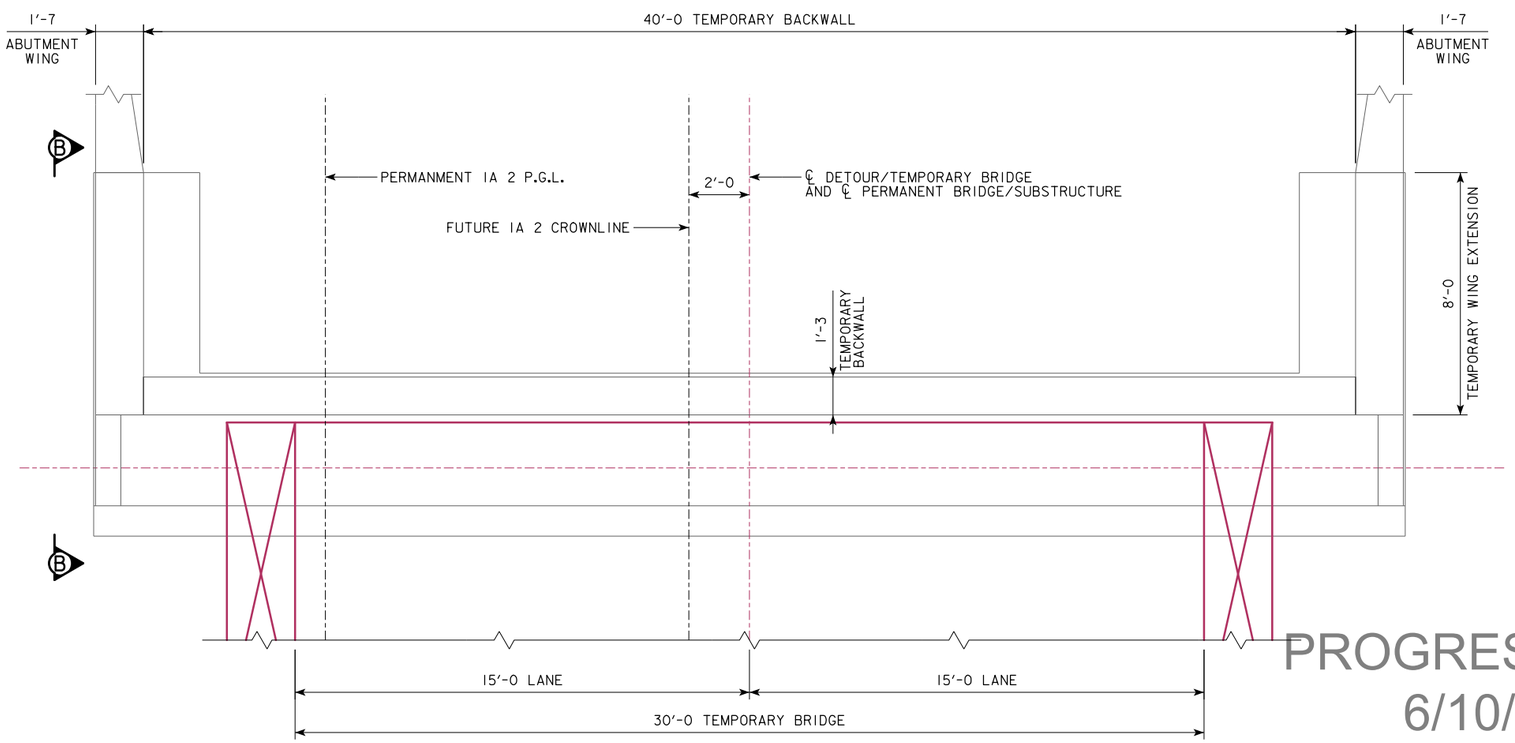

TEMPORARY BRIDGE SUPERSTRUCTURE - PLAN AT ABUTMENT

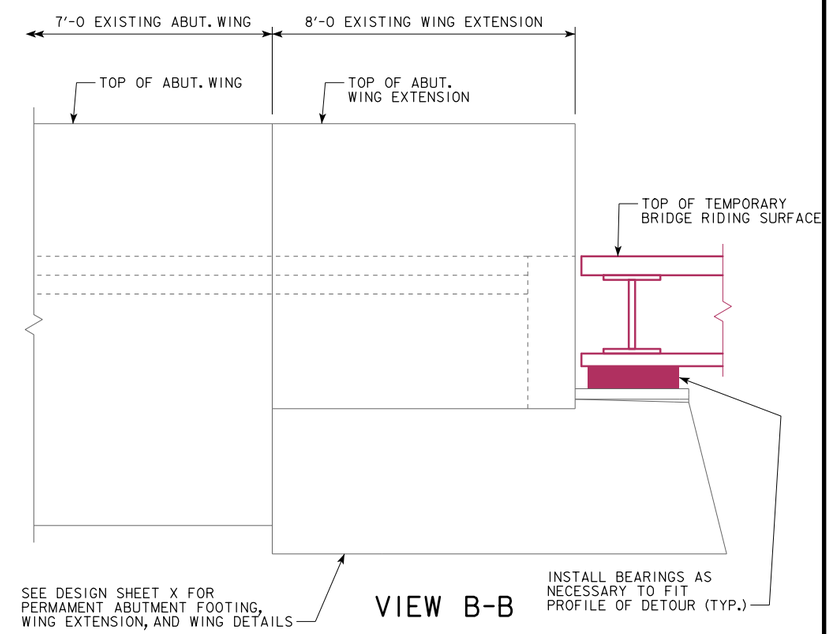

VIEW B-B

PROGRESS PLANS
6/10/2019

DESIGN FOR 0° SKEW

1097'-0 X 40'-0 PRETENSIONED PRESTRESSED CONCRETE BEAM E.B. BRIDGE

156'-0 END SPANS 157'-0 INTERIOR SPAN

TEMPORARY BRIDGE DETAILS

IA 2 STA. 400+85.00, RT. 32.00' JUNE 2019

FREMONT COUNTY

IOWA DEPARTMENT OF TRANSPORTATION - HIGHWAY DIVISION

DESIGN SHEET NO. 55 OF ? FILE NO. 31719 DESIGN NO. 119

DESIGN TEAM Stanley Consultants Inc.	FREMONT COUNTY	PROJECT NUMBER NHSX-002-1(123)--3H-36	SHEET NUMBER 56

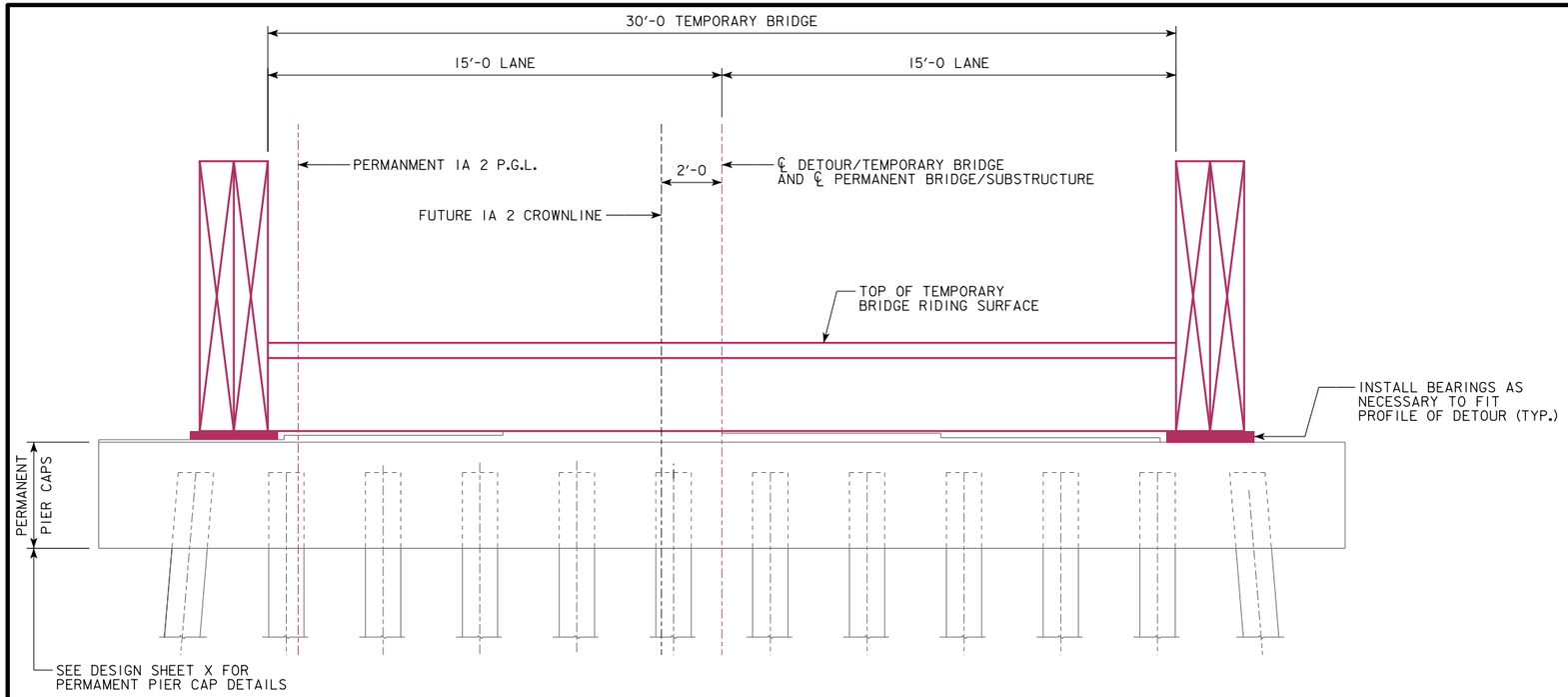

TEMPORARY BRIDGE SUPDERSTRUCTURE - ELEVATION AT PIERS

(PILE BENT OPTION, FRAME PIER OPTION SIMILAR)

PROGRESS PLANS
6/10/2019

DESIGN FOR 0° SKEW

1097'-0 X 40'-0 PRETENSIONED
PRESTRESSED CONCRETE BEAM E.B. BRIDGE

156'-0 END SPANS 157'-0 INTERIOR SPAN

TEMPORARY BRIDGE DETAILS

IA 2 STA. 400+85.00, RT. 32.00' JUNE 2019

FREMONT COUNTY

IOWA DEPARTMENT OF TRANSPORTATION - HIGHWAY DIVISION

DESIGN SHEET NO. 56 OF ? FILE NO. 31719 DESIGN NO. 119

ESTIMATED BRIDGE QUANTITIES - DESIGN 219

ITEM NO.	ITEM CODE	ITEM	UNIT	TOTAL 1	TOTAL 2 ALTERNATE OPTION 1	TOTAL 3 ALTERNATE OPTION 2	AS BUILT QUANTITY
1.	2402-2720000	EXCAVATION, CLASS 20	CY	4815	816	538	
2.	2403-0100010	STRUCTURAL CONCRETE (BRIDGE)	CY	1420	543	1964	
3.	2404-7775000	REINFORCING STEEL	LB		141900	???	
4.	2404-7775005	REINFORCING STEEL, EPOXY COATED	LB	387820			
5.	2404-7775009	REINFORCING STEEL, STAINLESS STEEL	LB	16368			
6.	2405-2705000	EXCAVATE AND DEWATER	EACH		1.0		
7.	2407-0564355	BEAMS, PRETENSIONED PRESTRESSED CONCRETE, BTE 155	EACH	42			
8.	2408-7800000	STRUCTURAL STEEL	LB	55885			
9.	2414-6424110	CONCRETE BARRIER RAILING	LF	2261			
10.	2499-2300001	DECK DRAINS	LS	1.0			
11.	2501-0201042	PILES, STEEL, HP 10x42	LF	3840			
12.	2501-0201517	PILES, STEEL, HP 14x117	LF		14400	18720	
13.	2507-2638650	BRIDGE WING ARMORING - EROSION STONE	SY	14.5			
14.	2507-3250005	ENGINEERING FABRIC	SY	5281			
15.	2507-6800061	REVETMENT, CLASS E	TON	5054			
16.	2507-8029000	EROSION STONE	TON	13.5			
17.	2526-8285000	CONSTRUCTION SURVEY	LS	1.0			
18.	2533-4980005	MOBILIZATION	LS	1.0			
19.	2599-9999005	EXPANSION JOINT (DRAINAGE SYSTEM)	EACH	2.0			
20.	2599-9999009	EXPANSION JOINT (FINGER PLATES)	LF	80.0			
21.	2599-9999010	TEMPORARY DETOUR BRIDGE SUPERSTRUCTURE	LS	1.0			

ESTIMATE REFERENCE INFORMATION

ITEM NO.	DESCRIPTION
2.	INCLUDES THE CONCRETE FOR THE ABUTMENTS, SLABS, PIERS AND WINGWALLS. INCLUDES FURNISHING AND PLACING SUBDRAIN (INCLUDING EXCAVATION), FLOODABLE BACKFILL, POROUS BACKFILL, GEOTEXTILE FABRIC, WATER FLOODING, AND SUBDRAIN OUTLETS AT ABUTMENTS. INCLUDES FURNISHING AND PLACING 3 INCH DIAMETER PVC PLASTIC PIPE AND EXPANDING FOAM IN THE ABUTMENT WINGS. INCLUDES FURNISHING AND APPLYING CONCRETE SEALER TO ABUTMENT BRIDGE SEATS AND ON BEAM ENDS AT ABUTMENTS.
3.	FURNISHING AND INSTALLING COIL TIES AND THREADED COIL RODS IN THE ABUTMENTS AND PIERS IS INCLUDED IN THIS ITEM. NO QUANTITY CALCULATED FOR THESE ITEMS. INCLUDES MECHANICAL SPLICERS IN THE ABUTMENT FOOTINGS AND PIER CAPS.
4.	INCLUDES XXXX LBS. IN THE SUBSTRUCTURE AND XXXX LBS. IN SUPERSTRUCTURE. INCLUDES MECHANICAL SPLICERS IN THE ABUTMENT BACKWALLS.
6.	FOR PIERS IN ACCORDANCE WITH ARTICLE 2405 OF THE STANDARD SPECIFICATIONS. THE DESIGN IS BASED ON SEAL COAT DIMENSIONS OF 18' X 12' X MIN. 3'. PAYMENT IS FOR FULL COMPENSATION FOR CLASS 20 AND CLASS 21 EXCAVATION, COFFERDAMS AND TREMIE CONCRETE SEALS (IF USED), COSTS OF OTHER PROCEDURES REQUIRED TO DEWATER THE EXCAVATIONS, PUMPING, BAILING AND DRAINAGE, AND MATERIALS, WORK, LABOR, AND EQUIPMENT REQUIRED TO PLACE THE FOOTINGS AND PIERS IN THE DRY.
7.	COARSE AGGREGATES FOR PRESTRESSED CONCRETE BRIDGE UNITS SHALL BE IN ACCORDANCE WITH THE REQUIREMENTS OF SECTION 4115 CLASS III DURABILITY. GRADATION OF THE COARSE AGGREGATE SHALL BE IN ACCORDANCE WITH THE REQUIREMENTS OF ARTICLE 2407.02, A, OF THE STANDARD SPECIFICATIONS. INCLUDES NEOPRENE PADS AND LAMINATED NEOPRENE BEARING PADS.
8.	INCLUDES FURNISHING AND INSTALLING STEEL INTERMEDIATE DIAPHRAGMS.
9.	IF PLACEMENT OF CONCRETE IS DONE BY THE SLIPFORMING METHOD, CLASS BR CONCRETE IS REQUIRED. CAST-IN-PLACE BARRIER RAILS SHALL USE CLASS C MIX. PRICE BID FOR THIS ITEM SHALL INCLUDE THE COST OF CAST-IN-PLACE FORMS IF REQUIRED FOR PLACEMENT OF CONCRETE. SEE BARRIER RAIL NOTES ON DESIGN SHEETS XX FOR MORE INFORMATION. INCLUDES XXXX FEET OF 2 INCH DIAMETER RIGID STEEL CONDUIT. INCLUDES MATERIAL AND LABOR ASSOCIATED WITH PROVIDING AND INSTALLING RIGID STEEL CONDUIT, JUNCTION BOXES AND EXPANSION FITTINGS.

ITEM NO.	DESCRIPTION
10.	INCLUDES XX DECK DRAINS. MEASUREMENT OF THE DECK DRAIN WILL BE LUMP SUM FOR ALL DECK DRAINS REQUIRED AS SPECIFIED IN THE PLANS. PAYMENT FOR THE QUANTITY OF DECK DRAIN WILL BE THE CONTRACT UNIT PRICE. PAYMENT IS FULL COMPENSATION FOR FURNISHING ALL MATERIALS, EQUIPMENT, AND LABOR NECESSARY TO FABRICATE AND INSTALL THE DECK DRAINS AS PER PLAN. SEE DESIGN SHEET XX FOR LOCATIONS, MATERIALS, AND THE DETAILS OF THEIR CONSTRUCTION.
11.	INCLUDES FURNISHING AND INSTALLING STEEL PILE POINTS. PILING SHALL BE GRADE 50. SPLICES BETWEEN INDIVIDUAL LENGTHS OF PILE SHALL CONSIST OF FULL PENETRATION WELDS IN ACCORDANCE WITH SECTION 2501.03,P,2 OF THE STANDARD SPECIFICATIONS.
12.	INCLUDES FURNISHING AND INSTALLING STEEL PILE POINTS. PILING SHALL BE GRADE 50. SPLICES BETWEEN INDIVIDUAL LENGTHS OF PILE SHALL CONSIST OF FULL PENETRATION WELDS IN ACCORDANCE WITH SECTION 2501.03,P,2 OF THE STANDARD SPECIFICATIONS.
13.	INCLUDES FURNISHING AND PLACING ENGINEERING FABRIC, EROSION STONE, AND ALL REQUIRED EXCAVATING, SHAPING AND COMPACTING FOR WING ARMORING.
14.	ENGINEERING FABRIC SHALL BE MATERIAL AS SPECIFIED FOR REVETMENT, ARTICLE 4196.01,B,6 AND EMBANKMENT EROSION CONTROL, ARTICLE 4196.01,B,3 OF THE STANDARD SPECIFICATIONS.
15.	ESTIMATED AT 1.6 TON/CY. BROKEN CONCRETE WILL NOT BE ALLOWED AS A SUBSTITUTE FOR REVETMENT.
16.	ESTIMATED AT 1.6 TON/CY.
19.	INCLUDES FULL COMPENSATION FOR THE FURNISHING, INSTALLING AND TESTING THE DRAINAGE SYSTEM UNDER THE FINGER JOINT AT THE ABUTMENTS AS DETAILED AND NOTED IN THESE PLANS. INCLUDES ALL NECESSARY HARDWARE AND ACCESSORIES NOT INCLUDED IN THE PRICE BID FOR "EXPANSION JOINT (FINGER PLATES)". INCLUDES ALL COSTS ASSOCIATED WITH FABRICATING, FURNISHING, AND INSTALLING NEOPRENE CURTAINS, NEOPRENE TROUGHS, CONCRETE ANCHORS, HANGER PLATES, ANGLES, AND ALL ASSOCIATED HARDWARE.
20.	INCLUDES FULL COMPENSATION FOR FURNISHING AN INSTALLING THE FINGER EXPANSION JOINT ASSEMBLY AT THE ABUTMENTS. THIS INCLUDES ALL NECESSARY HARDWARE AND ACCESSORIES INCLUDING THE FINGER PLATES, SUPPORT BRACKETS, ANCHOR PLATES, SHEAR STUDS, BOLTS, BARRIER RAIL PLATES, BENT PLATES, CAP SCREWS, ASSOCIATED HARDWARE AND ALL TEMPORARY ERECTION MATERIAL. ALSO INCLUDES ALL MISCELLANEOUS MATERIALS REQUIRED FOR CONSTRUCTION OF THE FINGER JOINTS INCLUDING FIELD WELDS.
21.	PAYMENT FOR "TEMPORARY DETOUR BRIDGE SUPERSTRUCTURE" WILL BE THE LUMP SUM CONTRACT PRICE. PAYMENT WILL BE FULL COMPENSATION FOR RENT, DELIVERY, ASSEMBLING, ERECTING, DISASSEMBLING, INSPECTING, MAINTAINING AND RETURNING THE TEMPORARY DETOUR BRIDGE SUPERSTRUCTURE. ALL COSTS FOR EQUIPMENT, LABOR AND MATERIALS NEEDED TO COMPLETE, MAKE USE OF AND REMOVE THE TEMPORARY DETOUR BRIDGE SUPERSTRUCTURE SHALL BE INCLUDED IN THE CONTRACT PRICE.

DIVISIONS:

1 BID ITEMS THAT ARE COMMON TO ALL CONTRACTOR CHOICES

2 BID ALTERNATE OPTION 1 IF SELECTING FRAME PIER WITH FOOTINGS

3 BID ALTERNATE OPTION 2 IF SELECTING ENCASED PILE BENT

PROGRESS PLANS
6/10/2019

DESIGN FOR 0° SKEW

1097'-0 X 40'-0 PRETENSIONED PRESTRESSED CONCRETE BEAM W.B. BRIDGE

156'-0 END SPANS 157'-0 INTERIOR SPAN

ESTIMATED QUANTITIES

IA 2 STA. 400+85.00, LT. 32.00' JUNE 2019

FREMONT COUNTY

IOWA DEPARTMENT OF TRANSPORTATION - HIGHWAY DIVISION

DESIGN SHEET NO. 1 OF 2 FILE NO. 31719 DESIGN NO. 219

SUMMARY OF CONCRETE QUANTITIES

LOCATION	STRUCTURAL CONCRETE	HPC STRUCTURAL CONCRETE
WEST ABUT. FTG. + BKWL. + WING EXT. + MASKWALL	62.2	
EAST ABUT. FTG. + BKWL. + WING EXT. + MASKWALL	62.2	
BRIDGE DECK + ABUT. & PIER DIAPHRAGMS	1284.7	
ABUTMENT WINGS	10.8	
PIERS - OPTION 1	542.6	
PIERS - OPTION 2	1964	
TOTAL (CU. YDS.)	1419.9 + OPTION	

SUMMARY OF REINFORCING STEEL

LOCATION	NON-COATED REINFORCING STEEL	STAINLESS STEEL REINFORCING STEEL	EPOXY COATED REINFORCING STEEL
WEST ABUT. FTG. + BKWL. + WING EXT. + MASKWALL		100	8,000
EAST ABUT. FTG. + BKWL. + WING EXT. + MASKWALL		100	8,000
BRIDGE DECK **			330,000
ABUTMENT WINGS			1,168
BARRIER RAIL - NORTH RAIL		7,700	19,500
BARRIER RAIL - SOUTH RAIL		7,700	19,500
BARRIER RAIL END SECTION		4 AT 192	4 AT 266
PIERS - OPTION 1	141,900		
PIERS - OPTION 2	???		
CONDUIT SUPPORT BARS			588
** INCLUDES ABUTMENT & PIER DIAPHRAGMS FOR PCC			
TOTAL (LBS.)	OPTION	16,368	387,820

SUMMARY OF EXCAVATION

LOCATION	CLASS 20 EXCAVATION	CLASS ___ EXCAVATION
WEST ABUTMENT	30.2	
EAST ABUTMENT	30.2	
PIERS - OPTION 1	816	
PIERS - OPTION 2	538	
WEST ABUT. REVETMENT	2508	
EAST ABUT. REVETMENT	2246	
TOTAL (CU. YDS.)		

SUMMARY OF FOUNDATIONS

LOCATION	SUBSTRUCTURE TYPE	FOUNDATION TYPE	NUMBER	LENGTH (LIN. FT.)	TOTAL (LIN. FT.)
WEST ABUTMENT	STUB ABUTMENT	HP10x42	16	120	1920
EAST ABUTMENT	STUB ABUTMENT	HP10x42	16	120	1920
PIERS - OPTION 1	FRAME PIER	HP14x117	144	100	14400
PIERS - OPTION 2	ENCASED PILE BENT PIER	HP14x117	156	120	18720

SUMMARY OF STRUCTURAL STEEL

LOCATION	TOTAL (LBS.)
DIAPHRAGMS	33,226
ABUTMENT BEARINGS	5,046
PIER BEARINGS	17,613
TOTAL (LBS.)	

SUMMARY OF BEARINGS

LOCATION	BEARING TYPE	NUMBER	ASSOCIATED BID ITEM
WEST ABUTMENT	$17\frac{1}{2}$ x $5\frac{7}{8}$ x 2'-0 LAMINATED NEOPRENE PAD	6	INCIDENTAL ITEM
EAST ABUTMENT	$17\frac{1}{2}$ x $5\frac{7}{8}$ x 2'-0 LAMINATED NEOPRENE PAD	6	INCIDENTAL ITEM
PIER #1	15 x 5 x 2'-4 LAMINATED NEOPRENE PAD	12	INCIDENTAL ITEM
PIER #2	15 x 5 x 2'-4 LAMINATED NEOPRENE PAD	12	INCIDENTAL ITEM
PIER #3	PLAIN NEOPRENE 1"	12	INCIDENTAL ITEM
PIER #4	PLAIN NEOPRENE 1"	12	INCIDENTAL ITEM
PIER #5	15 x 5 x 2'-4 LAMINATED NEOPRENE PAD	12	INCIDENTAL ITEM
PIER #6	15 x 5 x 2'-4 LAMINATED NEOPRENE PAD	12	INCIDENTAL ITEM

PROGRESS PLANS
6/10/2019

DESIGN FOR 0° SKEW

1097'-0 X 40'-0 PRETENSIONED PRESTRESSED CONCRETE BEAM W.B. BRIDGE

156'-0 END SPANS 157'-0 INTERIOR SPAN

SUMMARY QUANTITIES SHEET

IA 2 STA. 400+85.00, LT. 32.00' JUNE 2019

FREMONT COUNTY

IOWA DEPARTMENT OF TRANSPORTATION - HIGHWAY DIVISION

DESIGN SHEET NO. 2 OF ? FILE NO. 31719 DESIGN NO. 219

GENERAL NOTES:

IT IS THE INTENT OF THIS DESIGN TO CONSTRUCT A NEW 7-SPAN 1097'-0 X 40'-0 PRETENSIONED PRESTRESSED CONCRETE BEAM BRIDGE ON WESTBOUND IA 2 OVER THE MISSOURI RIVER OVERFLOW.

THIS BRIDGE IS DESIGNED FOR HL-93 LOADING, PLUS 20 LBS. PER SQUARE FOOT OF ROADWAY FOR FUTURE WEARING SURFACE.

UTILITY COMPANIES WHOSE FACILITIES ARE SHOWN ON THE PLANS OR KNOWN TO BE WITHIN THE CONSTRUCTION LIMITS SHALL BE NOTIFIED BY THE BRIDGE CONTRACTOR OF THE STARTING DATE.

CLASS 20 EXCAVATION QUANTITIES ARE BASED ON THE ASSUMPTION THAT THE CHANNEL EXCAVATION IS COMPLETED PRIOR TO STARTING CONSTRUCTION OF THE ABUTMENTS AND PIERS.

CLASS 20 EXCAVATION MATERIAL UNSUITABLE FOR BACKFILLING SHALL BE DISPOSED OF IN A MANNER THAT WILL LEAVE THE SITE IN A NEAT CONDITION. IT SHALL BE THE BRIDGE CONTRACTOR'S RESPONSIBILITY TO PROVIDE SITES FOR EXCESS EXCAVATED MATERIAL. NO PAYMENT FOR OVERHAUL WILL BE ALLOWED FOR MATERIAL HAULED TO THESE SITES.

CAST IN-ONE-PIECE STEEL PILE POINTS ARE REQUIRED FOR ABUTMENT PILES IN ACCORDANCE WITH ARTICLE 4167.02 OF THE CURRENT STANDARD SPECIFICATIONS AND MATERIALS IM 468.

MINIMUM CLEAR DISTANCE FROM FACE TO FACE OF CONCRETE TO NEAR REINFORCING BAR IS TO BE 2" UNLESS OTHERWISE NOTED OR SHOWN.

SEE ROADWAY PLANS FOR GUARDRAIL BID ITEMS AND NOTES.

THE ROAD WILL BE OPEN TO TRAFFIC DURING CONSTRUCTION. SEE TRAFFIC CONTROL PLAN NOTE ON THIS SHEET.

ABUTMENT PILES SHALL NOT BE DRIVEN FOR A MINIMUM OF ?? DAYS FOLLOWING COMPLETION OF APPROACH FILLS. THE TIME PERIOD BETWEEN COMPLETION OF FILLS AND DRIVING PILES MAY BE CHANGED AS ORDERED BY THE ENGINEER BASED UPON REVIEW OF SETTLEMENT PLATES.

THE APPROACH FILLS AS SHOWN ARE TO BE IN PLACE BEFORE ABUTMENT PILES ARE DRIVEN. THE BRIDGE CONTRACTOR IS TO LEVEL OFF AND SHAPE THE BERMS TO THE ELEVATIONS AND DIMENSIONS SHOWN.

CONCRETE BARRIER RAILS PLACED USING THE SLIPFORM METHOD WILL REQUIRE THE USE OF A CLASS BR CONCRETE IN ACCORDANCE WITH ARTICLE 2513.03, A, 2, OF THE STANDARD SPECIFICATIONS. CAST-IN-PLACE BARRIER RAILS SHALL USE CLASS C MIX. CLASS D CONCRETE IS NOT PERMITTED FOR CONCRETE BARRIER RAILS (CAST-IN-PLACE OR SLIPFORMED METHOD).

CONCRETE FORMS ARE REQUIRED TO REMAIN IN PLACE 5 DAYS OR LONGER IN ACCORDANCE WITH ARTICLE 2403.03,M,2, OF THE STANDARD SPECIFICATIONS, EXCEPT THE MINIMUM CONCRETE FLEXURAL STRENGTH REQUIRED BEFORE REMOVAL OF FORMS SHALL BE 575 PSI.

THE CONTRACTOR SHALL BE RESPONSIBLE FOR ENSURING STABILITY OF PRESTRESSED CONCRETE BEAMS DURING ERECTION AND CONSTRUCTION UP THROUGH THE CONCRETE BRIDGE DECK REACHING ITS FULL 28-DAY STRENGTH. THE CONTRACTOR SHALL PROVIDE SUFFICIENT TEMPORARY ANCHOR BRACING AT BEAM ENDS AND TEMPORARY INTERMEDIATE BRACING AS NEEDED TO ENSURE PRESTRESSED BEAM STABILITY. PARTIALLY OR FULLY INSTALLED PERMANENT BRACING AS SHOWN IN THESE DESIGN PLANS SHALL NOT BE ASSUMED SUFFICIENT TO BRACE PRESTRESSED BEAMS DURING ERECTION AND CONSTRUCTION. TEMPORARY BRACING SHALL NOT BE WELDED TO PRESTRESSED BEAM STIRRUPS.

THE BRIDGE CONTRACTOR IS TO INSTALL SUBDRAINS BEHIND THE ABUTMENTS AS DETAILED. THE SUBDRAINS SHALL BE 4" DIAMETER PERFORATED SUBDRAIN (POLYETHYLENE CORRUGATED TUBING). THE SUBDRAIN SHALL INCLUDE A METAL PIPE OUTLET SECTION WITH A REMOVABLE RODENT GUARD AS DETAILED IN THESE PLANS.

SEE ROADWAY PLANS FOR LONGITUDINAL GROOVING BID ITEMS AND NOTES.

404 PERMIT INFORMATION AND THE POLLUTION PREVENTION PLAN ARE INCLUDED IN THE TIED ROAD PLANS, PROJECT NO. ?.

ROADWAY QUANTITIES ARE INCLUDED IN THE TIED ROAD PLANS, PROJECT NO. ?.

KEYWAY DIMENSIONS SHOWN ON THE PLANS ARE BASED ON NOMINAL DIMENSIONS UNLESS STATED OTHERWISE. IN ADDITION, THE BEVEL USED ON THE KEYWAY SHALL BE LIMITED TO A MAXIMUM OF 10 DEGREES FROM VERTICAL.

IF DECK HANGERS ARE EMBEDDED IN PRESTRESSED BEAMS, THEY SHALL BE COATED USING ONE OF THE FOLLOWING METHODS:

1. ELCTROPLATING IN ACCORDANCE WITH ASTM B633, SERVICE CONDITION SC4, REQUIRED COATING THICKNESS OF 1.0 MIL. CLASSIFICATION OF COATING SUFFIX: Fe/Zn 25.

2. MECHANICAL GALVANIZING IN ACCORDANCE WITH ASTM B695, TYPE 1, CLASS 50. MINIMUM COATING THICKNESS SHALL BE 2 MILS.

SUBDRAIN SLOPED DOWNWARD 2% PER FOOT FROM CENTERLINE APPROACH ROADWAY TO EXTEND THRU FILL (TYPICAL BOTH ABUTMENTS).

THIS STRUCTURE IS TO BE BUILT UNDER THE CONDITIONS OF DNR FLOOD PLAIN DEVELOPMENT PERMIT NUMBER ____.

THIS PROJECT SHALL BE CONSTRUCTED IN ACCORDANCE WITH THE REQUIREMENTS OF U.S. ARMY CORPS OF ENGINEERS (Insert NATIONWIDE PERMIT # or REGIONAL PERMIT 7 or INDIVIDUAL PERMIT as appropriate), PERMIT NO. (Insert the corps' project-specific permit number, if applicable). A COPY OF THIS PERMIT IS AVAILABLE FROM THE IOWA DOT OFFICE OF CONTRACTS UPON REQUEST. THE U.S. ARMY CORPS OF ENGINEERS RESERVES THE RIGHT TO VISIT THE SITE WITHOUT PRIOR NOTICE.

THESE BRIDGE PLANS LABEL ALL REINFORCING STEEL WITH ENGLISH NOTATION (5al IS $\frac{5}{8}$ INCH DIAMETER BAR). ENGLISH REINFORCING STEEL RECEIVED IN THE FIELD MAY DISPLAY THE FOLLOWING "BAR DESIGNATION". THE "BAR DESIGNATION" IS THE STAMPED IMPRESSION ON THE REINFORCING BARS, AND IS EQUIVALENT TO THE BAR DIAMETER IN MILLIMETERS.

ENGLISH SIZE	3	4	5	6	7	8	9	10	11
BAR DESIGNATION	10	13	16	19	22	25	29	32	36

ALL REINFORCING BARS AND BARS NOTED AS DOWELS SUPPLIED FOR THIS STRUCTURE SHALL BE DEFORMED REINFORCEMENT UNLESS OTHERWISE NOTED OR SHOWN.

SPECIFICATIONS:

DESIGN: AASHTO LRFD 8th Ed, SERIES OF 2017, EXCEPT AS NOTED IN THE CURRENT IOWA BRIDGE DESIGN MANUAL.
CONSTRUCTION: IOWA DEPARTMENT OF TRANSPORTATION STANDARD SPECIFICATIONS FOR HIGHWAY AND BRIDGE CONSTRUCTION, SERIES 2015, PLUS APPLICABLE GENERAL SUPPLEMENTAL SPECIFICATIONS, DEVELOPMENTAL SPECIFICATIONS, SUPPLEMENTAL SPECIFICATIONS AND SPECIAL PROVISIONS SHALL APPLY TO CONSTRUCTION WORK ON THIS PROJECT.
SPECIAL PROVISION - TEMPORARY DETOUR BRIDGE

MASS CONCRETE IS NOT REQUIRED AT PIER CAPS.

DESIGN STRESSES:

DESIGN STRESSES FOR THE FOLLOWING MATERIALS ARE IN ACCORDANCE WITH THE AASHTO LRFD BRIDGE DESIGN SPECIFICATIONS, 8th Ed, SERIES OF 2017, EXCEPT AS NOTED IN THE CURRENT IOWA BRIDGE DESIGN MANUAL.

REINFORCING STEEL IN ACCORDANCE WITH AASHTO LRFD SECTION 5, GRADE 60 FOR EPOXY COATED AND NON-COATED, AND GRADE 60 OR 75 FOR STAINLESS.

CONCRETE IN ACCORDANCE WITH AASHTO LRFD SECTION 5, f'c = 4.0 KSI, EXCEPT PRESTRESSED BEAM CONCRETE AS NOTED.

PRESTRESSED CONCRETE BEAMS, SEE DESIGN SHEET ____

BRIDGE DECK CONCRETE f'c = 4.0 KSI

STRUCTURAL STEEL IN ACCORDANCE WITH AASHTO LRFD SECTION 6. ASTM A709 GRADE 36, GRADE 50, AND GRADE 50W (AASHTO M270 GRADE 36, GRADE 50, AND GRADE 50W).

FATIGUE DESIGN BASED ON FATIGUE I LOAD COMBINATION AND INFINITE LIFE (OR FATIGUE DESIGN BASED ON FATIGUE II LOAD COMBINATION AND 75 YEAR FINITE LIFE WITH SINGLE LANE ADTT ($ADTT_{SL}$) OF ?.

DURING CONSTRUCTION OF THIS PROJECT THE BRIDGE CONTRACTOR WILL BE REQUIRED TO COORDINATE OPERATIONS WITH THOSE OF OTHER CONTRACTORS WORKING WITHIN THE SAME AREA. OTHER WORK IN PROGRESS DURING THE SAME PERIOD OF TIME WILL INCLUDE, BUT IS NOT LIMITED TO, CONSTRUCTION OF THE FOLLOWING PROJECTS:

--- ---
--- ---
--- ---
--- ---
--- ---

IN PROGRESS PLANS
6/10/2019

SHOP DRAWING SUBMITTALS

SHOP DRAWINGS SHALL BE SUBMITTED FOR THE FOLLOWING ITEMS SHOWN IN THE TABLE BELOW. (NOTE ADDITIONAL SHOP DRAWINGS MAY BE REQUIRED IN ACCORDANCE WITH ARTICLE 1105.03 OF THE STANDARD SPECIFICATIONS.)

SUBMITTAL REQUIREMENTS FOR SHOP DRAWINGS SHOULD BE IN ACCORDANCE WITH ARTICLE 1105.03, OF THE STANDARD SPECIFICATIONS, FOR HIGHWAY AND BRIDGE CONSTRUCTION OF THE IOWA DEPARTMENT OF TRANSPORTATION.

1	STRUCTURAL STEEL - DIAPHRAGMS
2	FINGER JOINT DETAILS
3	DECK DRAINAGE SYSTEM
4	TEMPORARY BRIDGE SUPERSTRUCTURE
?	?

BRIDGE DECK DIMENSIONS TABLE

NO.	ITEM	UNIT	QUANTITY
1	DECK LENGTH	L.F.	1103.0
2	MINIMUM DECK WIDTH	L.F.	40.0
3	MAXIMUM DECK WIDTH	L.F.	40.0
4	DECK AREA	S.F.	44120

1. DECK LENGTH IS MEASURED FROM FACE-TO-FACE OF PAVING NOTCHES ALONG THE CENTERLINE OF THE ROADWAY.
2, 3. DECK WIDTHS ARE MEASURED FROM OUT-TO-OUT OF DECK PERPENDICULAR TO THE CENTERLINE OF ROADWAY.
4. DECK AREA IS TO BE BASED ON THE FACE-TO-FACE PAVING NOTCH DISTANCE AND OUT-TO-OUT DECK DIMENSIONS.

NOTE:
ROADWAY QUANTITIES SHOWN ELSEWHERE IN THESE PLANS.

TRAFFIC CONTROL PLAN

NOTE: THE ROADWAY WILL BE OPEN TO THRU TRAFFIC. TRAFFIC CONTROL WILL BE THE RESPONSIBILITY OF THE ROAD CONTRACTOR AS SHOWN ON THE ROAD PLANS.

DESIGN FOR 0° SKEW

1097'-0 X 40'-0 PRETENSIONED PRESTRESSED CONCRETE BEAM W.B. BRIDGE

156'-0 END SPANS 157'-0 INTERIOR SPAN

GENERAL NOTES

IA 2 STA. 400+85.00, LT. 32.00' JUNE 2019

FREMONT COUNTY

IOWA DEPARTMENT OF TRANSPORTATION - HIGHWAY DIVISION

DESIGN SHEET NO. 3 OF ? FILE NO. 31719 DESIGN NO. 219

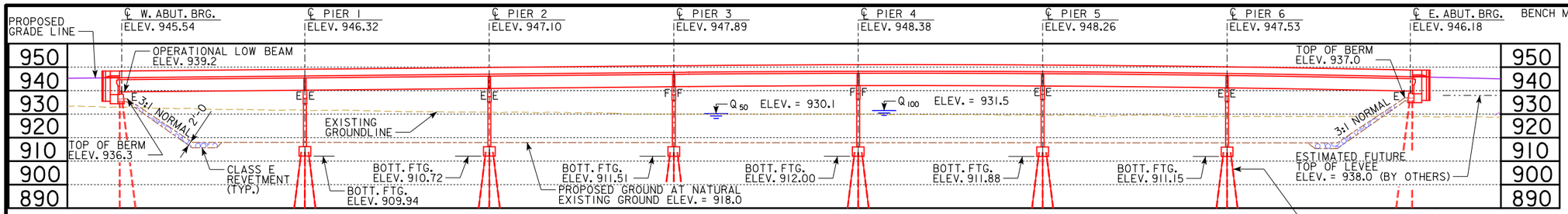

LONGITUDINAL SECTION ALONG ℄ W.B. BRIDGE

(VERTICAL SCALE 2:1)

-3.200% +0.500% -2.000%

VPI STA. = 389+75
VPI ELEV. = 942.70
VC = 500'

VPI STA. = 404+75
VPI ELEV. = 950.20
VC = 1,000'

PROPOSED PROFILE GRADE IA 2

TRAFFIC ESTIMATE

2016 AADT 8,200 V.P.D.

PERMITTING NOTES:

1. AS THIS PROJECT REQUIRES A SOVEREIGN LANDS PERMIT, BID ITEM REFERENCE NOTES SHALL RESTRICT BROKEN CONCRETE AS A SUBSTITUTE FOR REVETMENT.
2. AN IOWA DNR FLOOD PLAIN CONSTRUCTION PERMIT IS REQUIRED.
3. AN IOWA DNR SOVEREIGN LANDS PERMIT IS REQUIRED.

LOCATION

W.B. IA 2 OVERFLOW
T-68N R-43W
SECTION 30/31
BENTON TOWNSHIP
FREMONT COUNTY
FHWA NO. 701080
BRIDGE MAINT. NO. 3600.5L002
LATITUDE 40.676931°
LONGITUDE -95.825181°

UTILITIES LEGEND:

— FO — SPIRAL FIBER OPTIC

1103'-0 FACE TO FACE PAVING NOTCHES

1097'-0 ℄ TO ℄ ABUTMENT BEARINGS

SPAN 1	SPAN 2	SPAN 3	SPAN 4	SPAN 5	SPAN 6	SPAN 7
156'-0	157'-0	157'-0	157'-0	157'-0	157'-0	156'-0

W. ABUT. BRG. STA. 395+00.00 LT. 32.00'	PIER 1 STA. 396+56.00 LT. 32.00'	PIER 2 STA. 398+13.00 LT. 32.00'	PIER 3 STA. 399+70.00 LT. 32.00'	PIER 4 STA. 401+27.00 LT. 32.00'	PIER 5 STA. 402+84.00 LT. 32.00'	PIER 6 STA. 404+41.00 LT. 32.00'	E. ABUT. BRG. STA. 405+97.00 LT. 32.00'

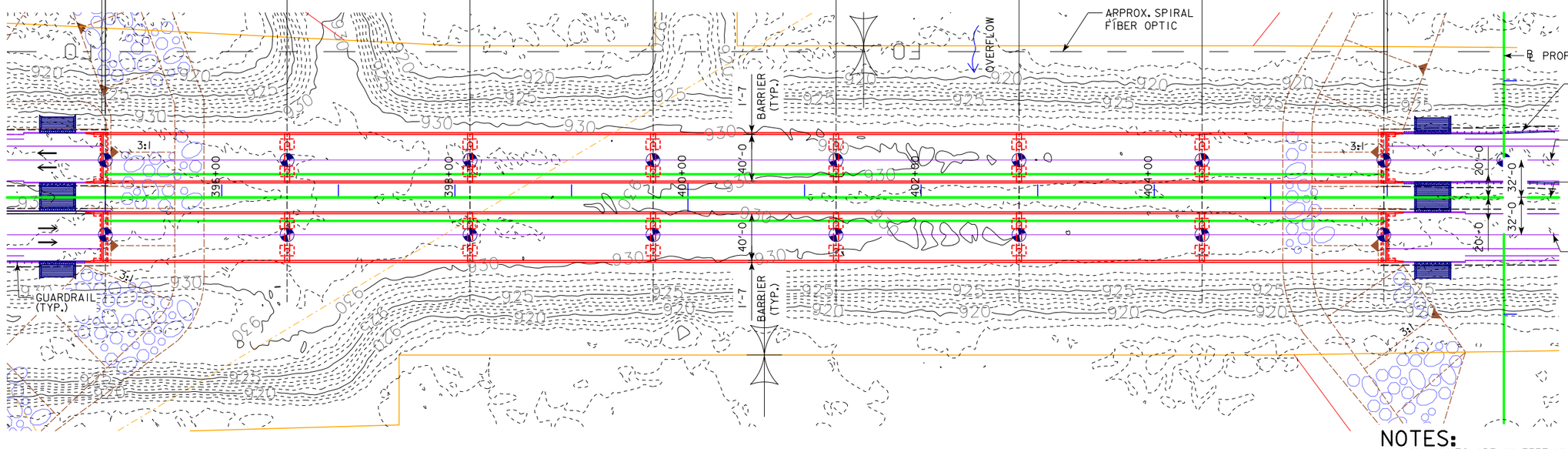

SITUATION PLAN

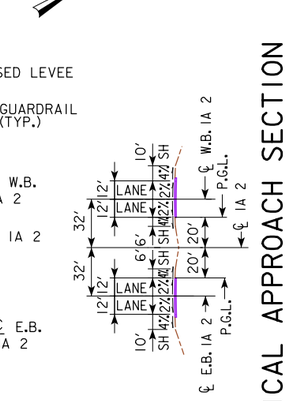

TYPICAL APPROACH SECTION

APPROXIMATE BORING LOCATION

0 ENGLISH 100
SCALE IN FEET

NOTES:

1. ALL UNITS ARE IN FEET UNLESS OTHERWISE NOTED.
2. TL-4 BRIDGE RAILING PROPOSED.
3. TOP OF BRIDGE DECK AT ℄ W.B. IA 2 IS 0.21' ABOVE THE PROFILE GRADE TO ACCOUNT FOR DECK CROSS SLOPE AND PARABOLIC CROWN.
4. PIER TYPE - 2 COLUMN FRAME PIER OPTION SHOWN, PILE BENT OPTION SIMILAR.
5. BEAM TYPE - BTE BEAMS.
6. BOTH PIER OPTIONS SUPPORTED ON DRIVEN H-PILES.
7. CLASS E REVETMENT STONE PREMIUM.

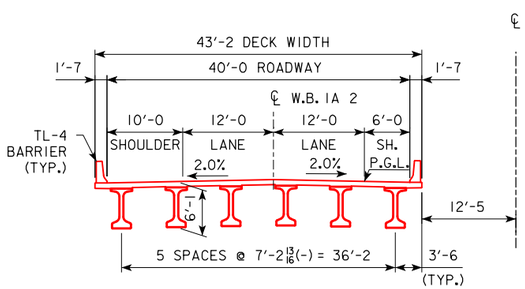

PROPOSED BRIDGE CROSS SECTION

HYDRAULIC DESIGN

I hereby certify that this engineering document was prepared by me or under my direct personal supervision and that I am a duly licensed Professional Engineer under the laws of the State of Iowa.

LICENSED PROFESSIONAL ENGINEER Mark D. Werner 15418 IOWA

Signature MARK D. WERNER Date

Printed or Typed Name

My license renewal date is December 31, 2019

Pages or sheets covered by this seal:

HYDRAULIC DATA

DRAINAGE AREA = 410,000 SQ. MI.
STREAM SLOPE = 0.9 FT./MI.
AVG. LOW WATER STAGE = 914.2

Q_{25} = 189,900 CFS
STAGE = 929.3

Q_{50} = 206,400 CFS
STAGE = 930.1
REGULATORY LOW BEAM = N/A
BACKWATER = -0.9 FT.

Q_{100} = 236,700 CFS
STAGE = 931.5
OPERATIONAL LOW BEAM = 939.4
BACKWATER = -1.1 FT.
AVG. BRIDGE VELOCITY = 3.9 FPS

Q_{200} = 275,900 CFS
STAGE = LEVEE OVERTOPS*
CALCULATED DESIGN SCOUR = ???.?

Q_{500} = 345,400 CFS
STAGE = LEVEE OVERTOPS*
CALCULATED CHECK SCOUR = ???.?

* LEVEE OVERTOPS LESS THAN Q_{200} PER USACE STUDY. ASSUME STAGE 1' ABOVE TOP OF LEVEE.

DISCHARGES FROM USACE, UPPER MISSISSIPPI RIVER SYSTEM FLOW FREQUENCY STUDY, DATED NOVEMBER 2003.

VERTICAL DATUM = NAVD 88

PROGRESS PLANS
6/10/2019

DESIGN FOR 0° SKEW

1097'-0 X 40'-0 PRETENSIONED PRESTRESSED CONCRETE BEAM W.B. BRIDGE

156'-0 END SPANS 157'-0 INTERIOR SPAN

SITUATION PLAN

IA 2 STA. 400+85.00, LT. 32.00' JUNE 2019

FREMONT COUNTY

IOWA DEPARTMENT OF TRANSPORTATION - HIGHWAY DIVISION

DESIGN SHEET NO. 4 OF 7 FILE NO. 31719 DESIGN NO. 219

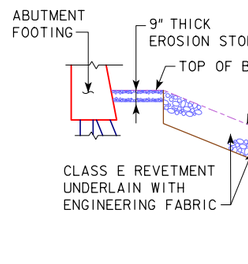

SECTION THRU EMBEDDED REVETMENT BERM

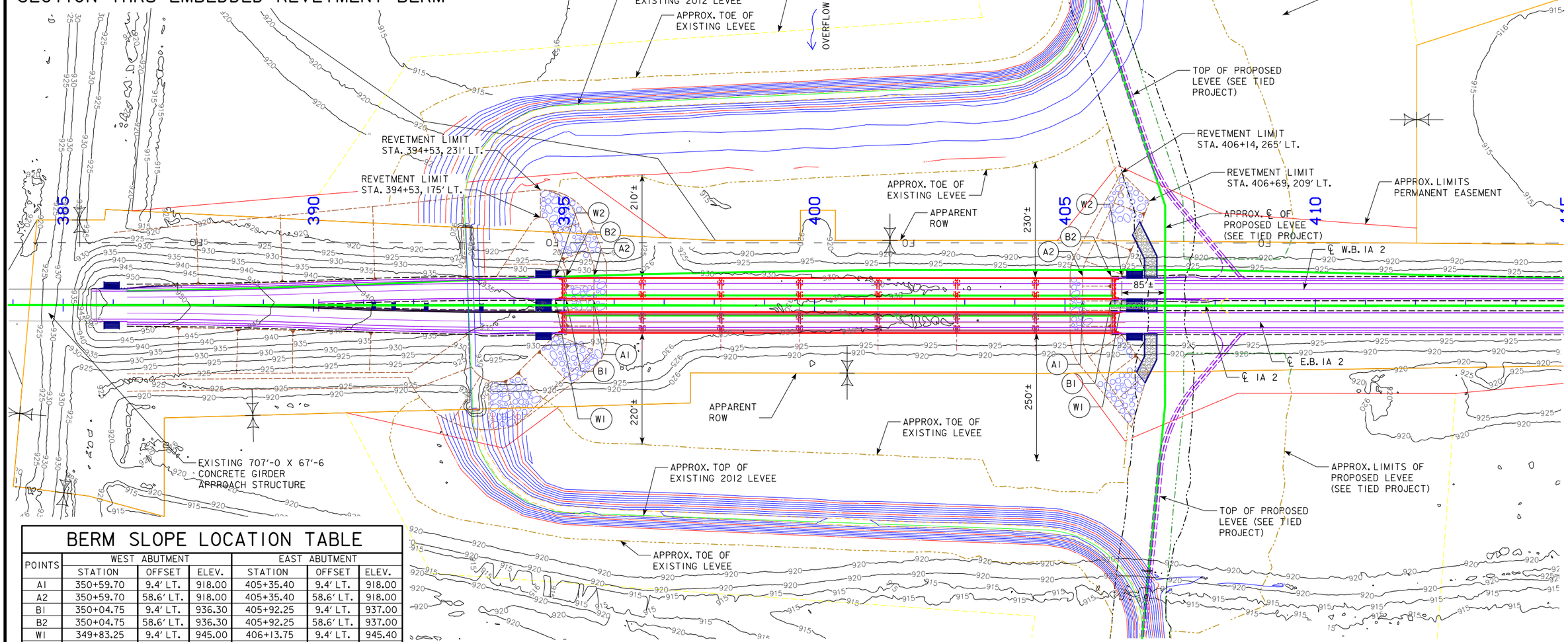

SITE PLAN

PRELIMINARY

BERM SLOPE LOCATION TABLE

POINTS	WEST ABUTMENT			EAST ABUTMENT		
	STATION	OFFSET	ELEV.	STATION	OFFSET	ELEV.
A1	350+59.70	9.4' LT.	918.00	405+35.40	9.4' LT.	918.00
A2	350+59.70	58.6' LT.	918.00	405+35.40	58.6' LT.	918.00
B1	350+04.75	9.4' LT.	936.30	405+92.25	9.4' LT.	937.00
B2	350+04.75	58.6' LT.	936.30	405+92.25	58.6' LT.	937.00
W1	349+83.25	9.4' LT.	945.00	406+13.75	9.4' LT.	945.40
W2	349+83.25	58.6' LT.	944.90	406+13.75	58.6' LT.	945.30

BERM SLOPE ELEVATIONS REFLECT THE GRADING SURFACE

ESTIMATED BERM ARMORING QUANTITIES

LOCATION	REVETMENT CL. E (TON)	EROSION STONE (TON)	ENGINEERING FABRIC (SY)	EXCAVATION (CY)
BERM LINING - WEST ABUTMENT	2190	13	2290	2060
BERM LINING - EAST ABUTMENT	2670	13	2790	2510
TOTALS	4860	26	5080	4570

EXCAVATION QUANTITY CALCULATED FROM GRADING SURFACE.

PROGRESS PLANS
6/10/2019

NOTES:
1. EXISTING 2012 LEVEE SHOWN WAS OBTAINED FROM ADDITIONAL SURVEY FROM MAY 2019.
2. PROPOSED LEVEE CONSTRUCTION SHALL BE PART OF TIED PROJECT.

0 ENGLISH 200
SCALE IN FEET

DESIGN FOR 0° SKEW

1097'-0 X 40'-0 PRETENSIONED PRESTRESSED CONCRETE BEAM W.B. BRIDGE

156'-0 END SPANS 157'-0 INTERIOR SPAN

SITUATION PLAN - SITE

IA 2 STA. 400+85.00, LT. 32.00' JUNE 2019

FREMONT COUNTY

IOWA DEPARTMENT OF TRANSPORTATION - HIGHWAY DIVISION

DESIGN SHEET NO. 5 OF 7 FILE NO. 31719 DESIGN NO. 219

DESIGN TEAM Stanley Consultants Inc. FREMONT COUNTY PROJECT NUMBER BRS-002-1(123)--3H-36 SHEET NUMBER 62

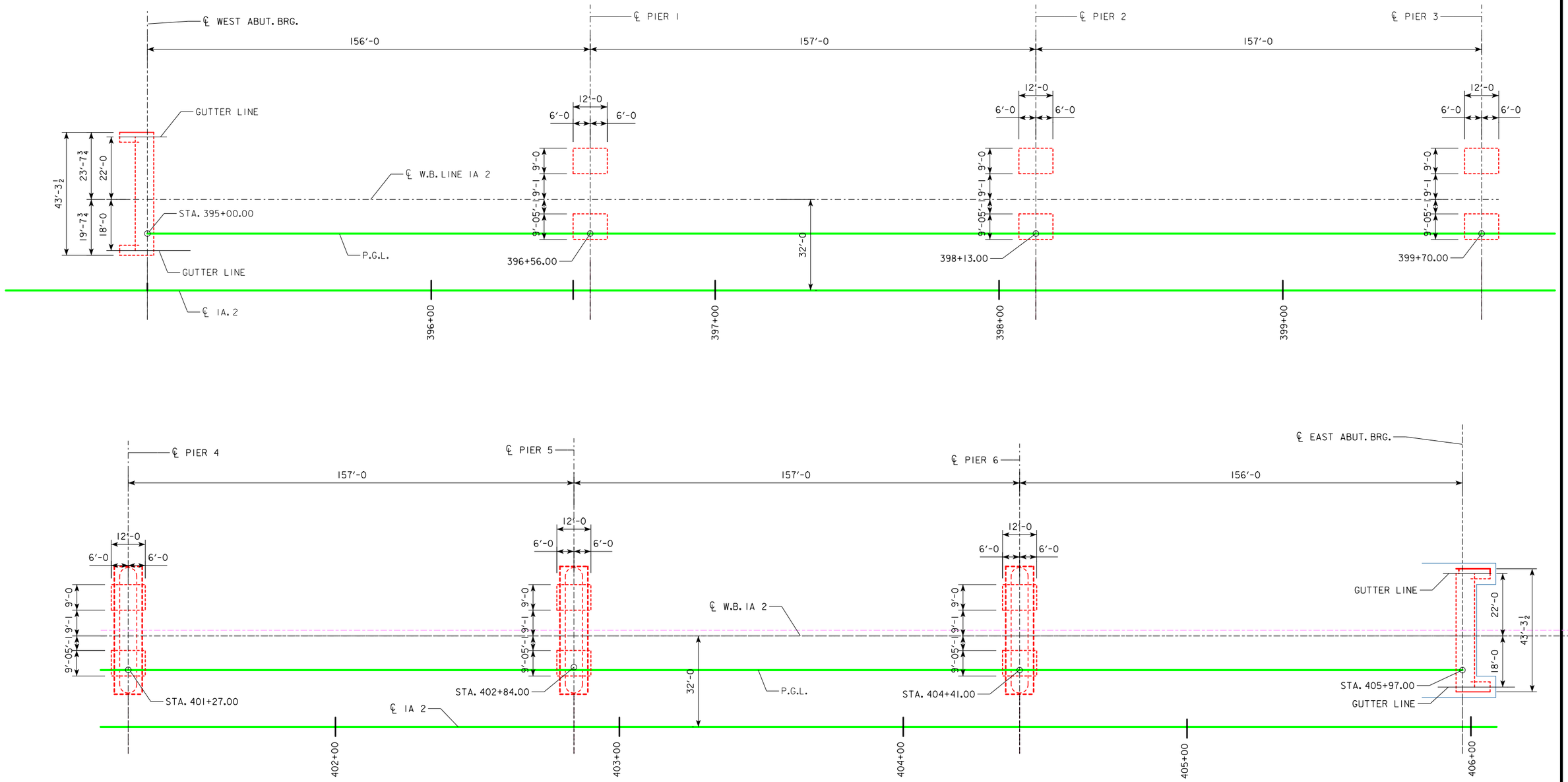

STAKING DIAGRAM

PROGRESS PLANS
6/10/2019

DESIGN FOR 0° SKEW

1097'-0 X 40'-0 PRETENSIONED PRESTRESSED CONCRETE BEAM W.B. BRIDGE

156'-0 END SPANS — 157'-0 INTERIOR SPAN

STAKING DIAGRAM - FRAME PIER OPTION

IA 2 STA. 400+85.00, LT. 32.00' — JUNE 2019

FREMONT COUNTY

IOWA DEPARTMENT OF TRANSPORTATION - HIGHWAY DIVISION

DESIGN SHEET NO. 6 OF 7 FILE NO. 31719 DESIGN NO. 219

DESIGN TEAM Stanley Consultants Inc. | FREMONT COUNTY | PROJECT NUMBER NHSX-002-1(123)--3H-36 | SHEET NUMBER 63

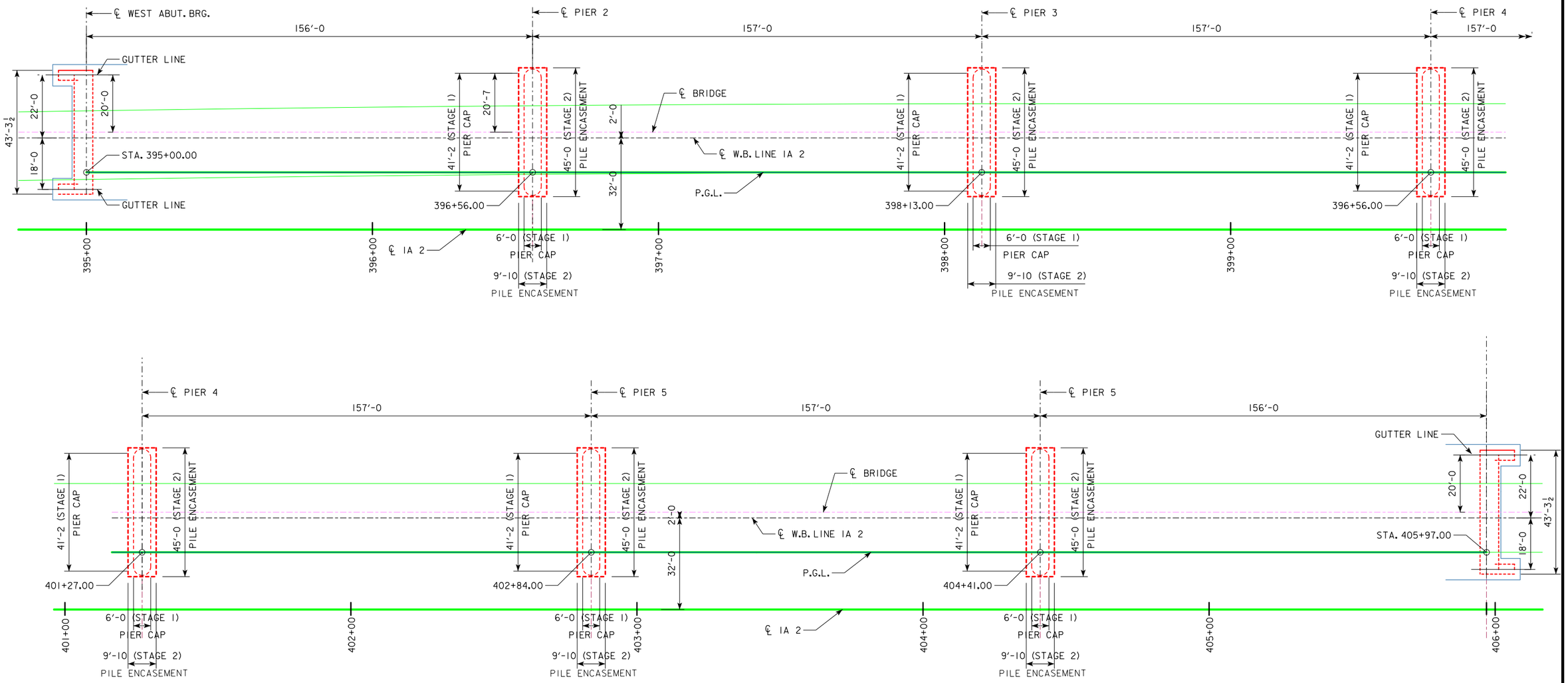

STAKING DIAGRAM

N

PROGRESS PLANS
6/10/2019

DESIGN FOR 0° SKEW

1097'-0 X 40'-0 PRETENSIONED PRESTRESSED CONCRETE BEAM W.B. BRIDGE

156'-0 END SPANS — 157'-0 INTERIOR SPAN

STAKING DIAGRAM - PILE BENT OPTION

IA 2 STA. 400+85.00, LT. 32.00' — JUNE 2019

FREMONT COUNTY

IOWA DEPARTMENT OF TRANSPORTATION - HIGHWAY DIVISION

DESIGN SHEET NO. 7 OF ? FILE NO. 31719 DESIGN NO. 219

DESIGN TEAM Stanley Consultants Inc. | FREMONT COUNTY | PROJECT NUMBER NHSX-002-1(123)--3H-36 | SHEET NUMBER 64

BENCH MARK :

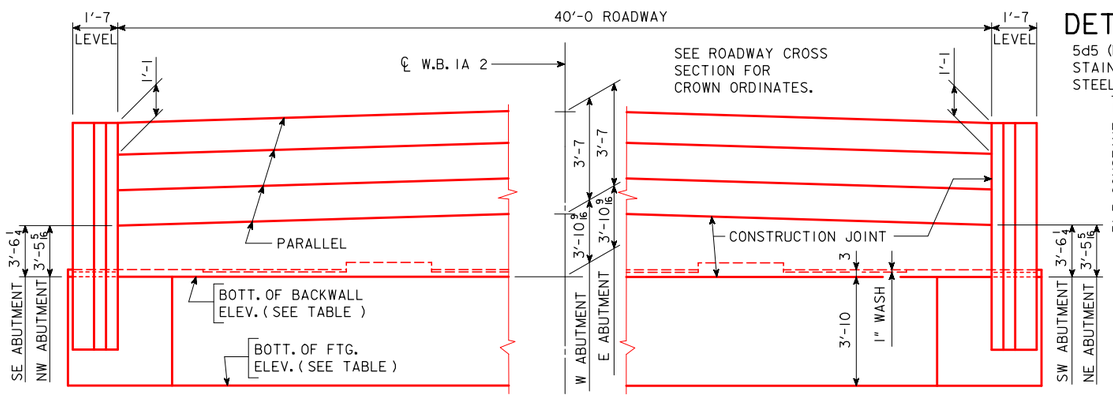

REAR ELEVATION

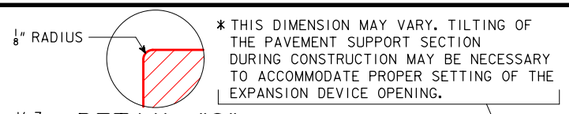

DETAIL "C"

* THIS DIMENSION MAY VARY. TILTING OF THE PAVEMENT SUPPORT SECTION DURING CONSTRUCTION MAY BE NECESSARY TO ACCOMMODATE PROPER SETTING OF THE EXPANSION DEVICE OPENING.

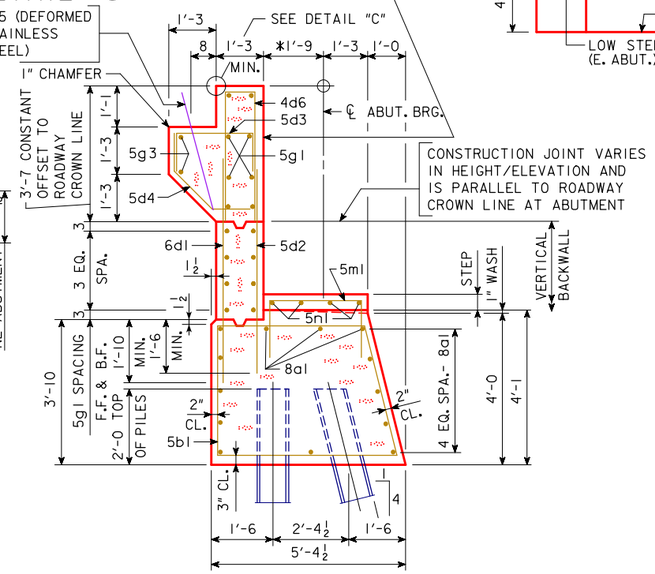

SECTION THROUGH ABUTMENT

EXPANSION DEVICE NOT SHOWN

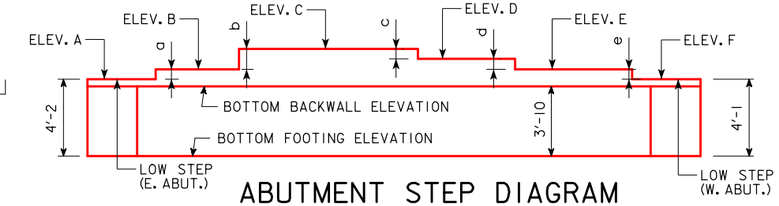

ABUTMENT STEP DIAGRAM

(REAR ELEVATION, EAST ABUTMENT)
(FRONT ELEVATION, WEST ABUTMENT)

TABLE OF ABUTMENT ELEVATIONS

POINT	WEST ABUTMENT	EAST ABUTMENT
ELEV. A	938.43	939.14
ELEV. B	938.58	939.29
ELEV. C	938.71	939.42
ELEV. D	938.64	939.35
ELEV. E	938.50	939.21
ELEV. F	938.35	939.06
BOTT.BACKWALL ELEV.	938.10	938.81
BOTT. FTG. ELEV.	934.27	934.98

TABLE OF ABUTMENT STEPS

STEP	WEST ABUTMENT	EAST ABUTMENT
a	1 13/16	1 13/16
b	1 11/16	1 11/16
c	1 15/16	1 15/16
d	1 11/16	1 11/16
e	1 13/16	1 13/16

NOTE :
PLACE 5m1 AND 5n1 BARS UNDER EACH BEAM.

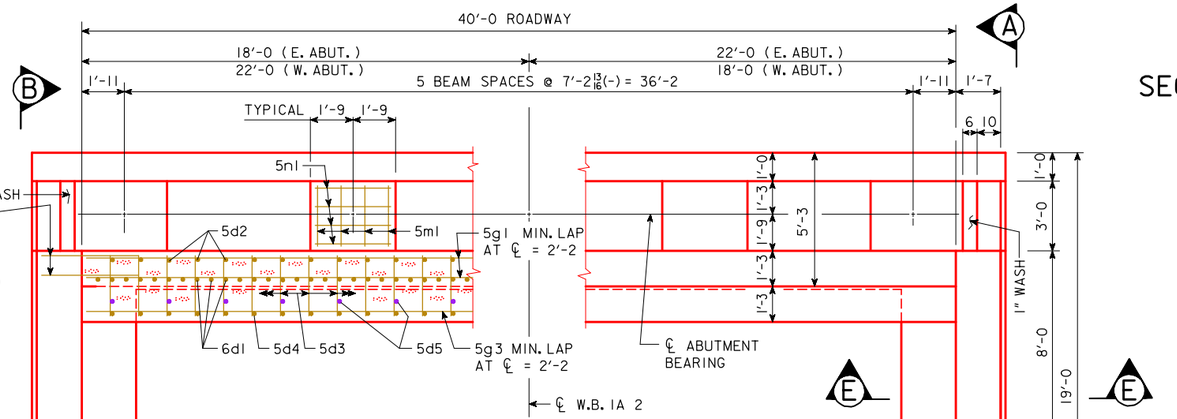

PART PLAN VIEW

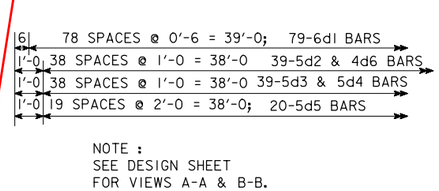

NOTE :
SEE DESIGN SHEET FOR VIEWS A-A & B-B.

PART SECTION THROUGH BACKWALL

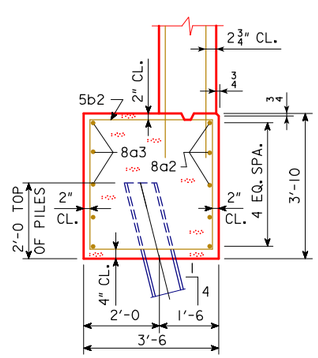

SECTION E-E

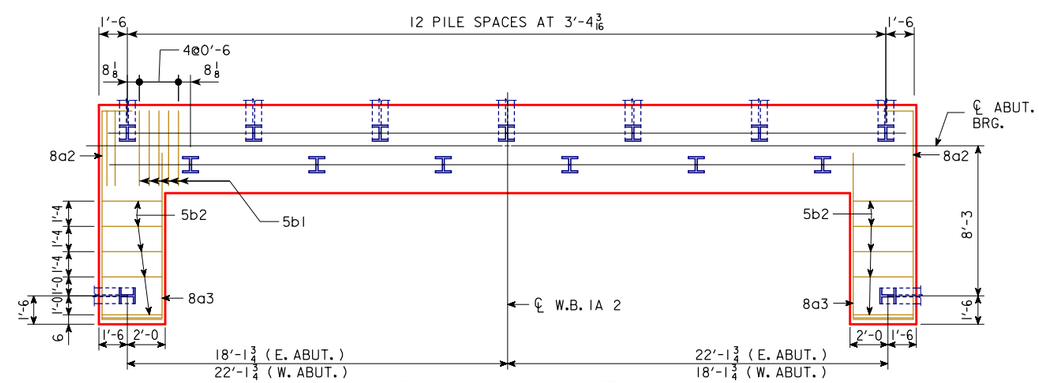

PILING LAYOUT

PROGRESS PLANS
6/10/2019

NOTE :
DIMENSIONS SHOWN ON PILING LAYOUT ARE AT BOTTOM OF FOOTING. BATTER PILES IN THE DIRECTION SHOWN.
15 - HP10x42 STEEL BEARING PILING REQUIRED AT EACH ABUTMENT.

NOTE: BARRIER RAIL NOT SHOWN IN DETAILS.

DESIGN FOR 0° SKEW

1097'-0 X 40'-0 PRETENSIONED PRESTRESSED CONCRETE BEAM W.B. BRIDGE

156'-0 END SPANS — 157'-0 INTERIOR SPAN

ABUTMENT FOOTING DETAILS

IA 2 STA. 400+85.00, LT. 32.00' — JUNE 2019

FREMONT COUNTY

IOWA DEPARTMENT OF TRANSPORTATION - HIGHWAY DIVISION

DESIGN SHEET NO. 8 OF 2 — FILE NO. 31719 — DESIGN NO. 219

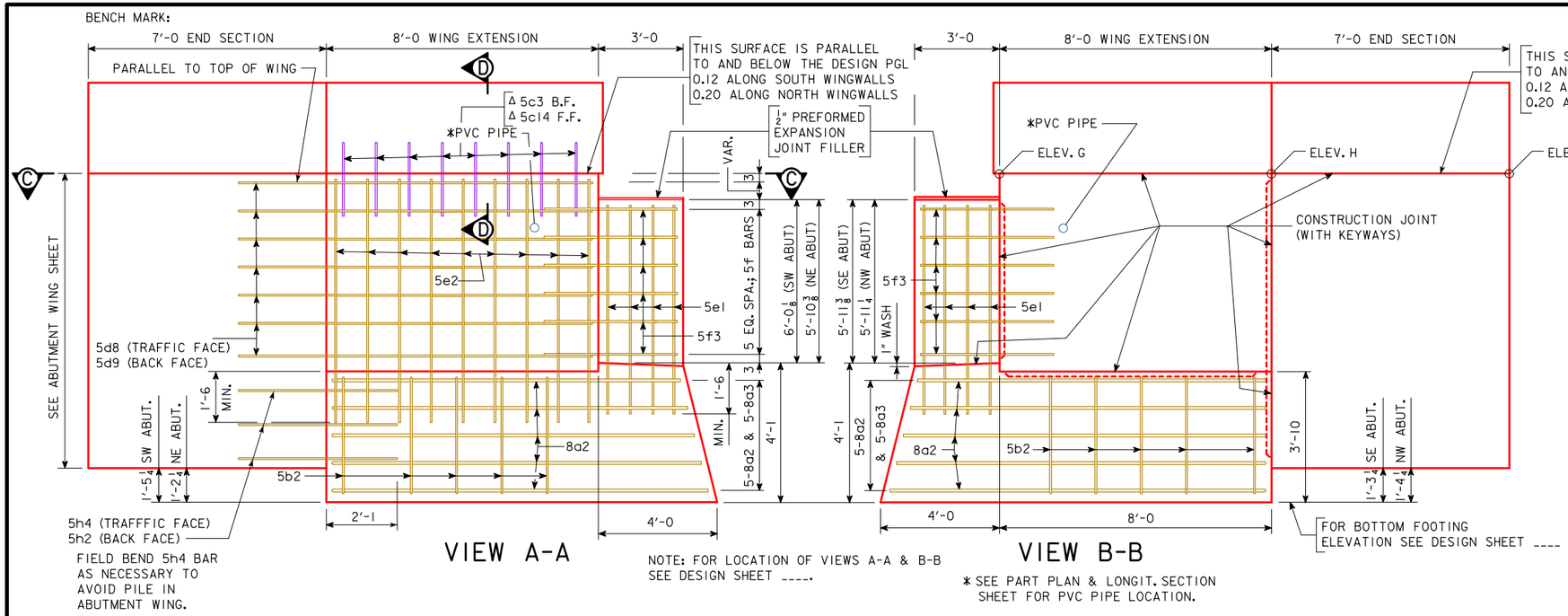

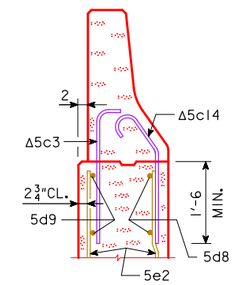

PART SECTION D-D

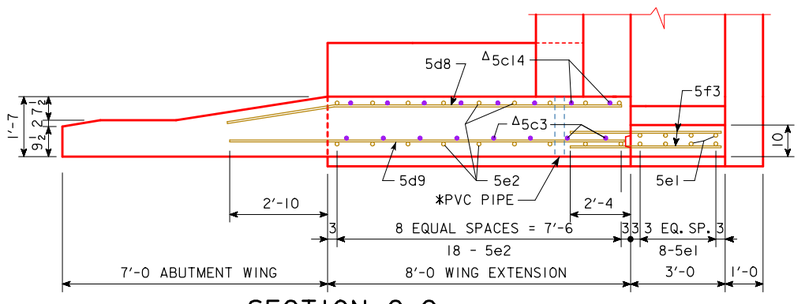

SECTION C-C

NOTE: BARRIER RAIL NOT SHOWN IN SECTION C-C.

Δ NOTE: SEE DESIGN SHEET ____ IN THESE PLANS FOR DETAILS OF BARRIER RAIL WING EXTENSIONS. REINFORCING BARS 5c3 AND 5c14 ARE INCLUDED IN THE BARRIER RAIL QUANTITIES.

TABLE OF WINGWALL ELEVATIONS

LOCATION	ELEV. G	ELEV. H	ELEV. I
SOUTHWEST WING	945.20	945.16	945.12
NORTHWEST WING	945.12	945.08	945.04
SOUTHEAST WING	945.84	945.75	945.67
NORTHEAST WING	945.76	945.67	945.59

PROGRESS PLANS
6/10/2019

DESIGN FOR 0° SKEW

1097'-0 X 40'-0 PRETENSIONED PRESTRESSED CONCRETE BEAM W.B. BRIDGE

156'-0 END SPANS 157'-0 INTERIOR SPAN

ABUTMENT WING EXT. DETAILS

IA 2 STA. 400+85.00, LT. 32.00' JUNE 2019

FREMONT COUNTY

IOWA DEPARTMENT OF TRANSPORTATION - HIGHWAY DIVISION

DESIGN SHEET NO. 9 OF ? FILE NO. 31719 DESIGN NO. 219

DESIGN TEAM Stanley Consultants Inc.	"BTE" BEAM STUB ABUT. DETAILS - 0° SKEW	MODIFIED STANDARD SHEET 2099-BTE	FREMONT COUNTY	PROJECT NUMBER NHSX-002-1(123)--3H-36	SHEET NUMBER 66

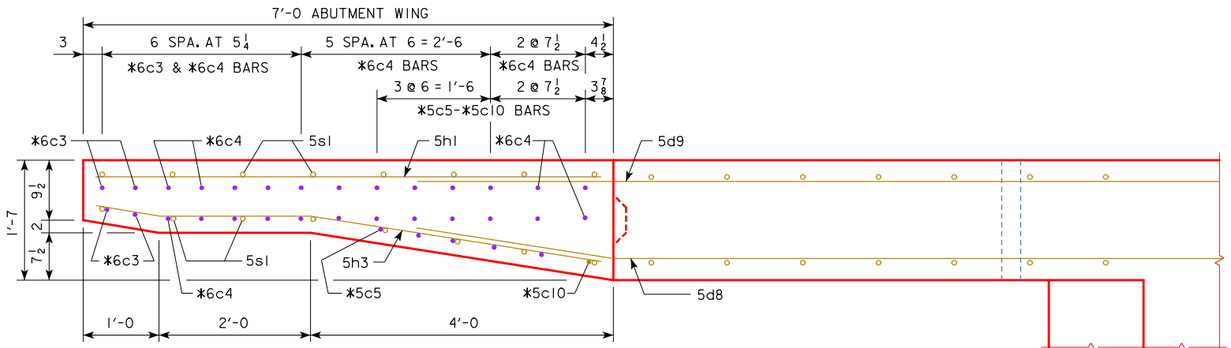

VIEW A-A

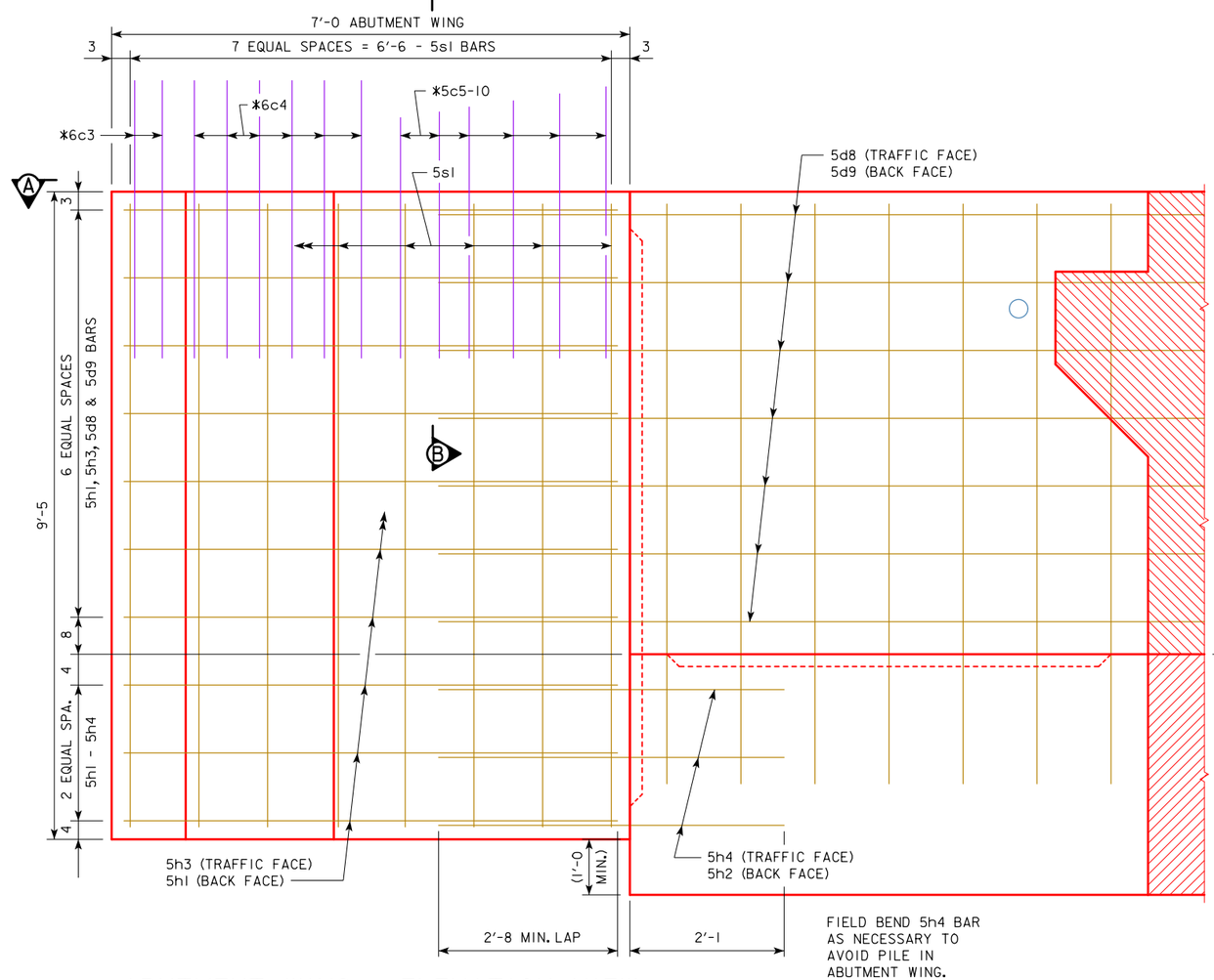

ABUTMENT WING - ELEVATION VIEW

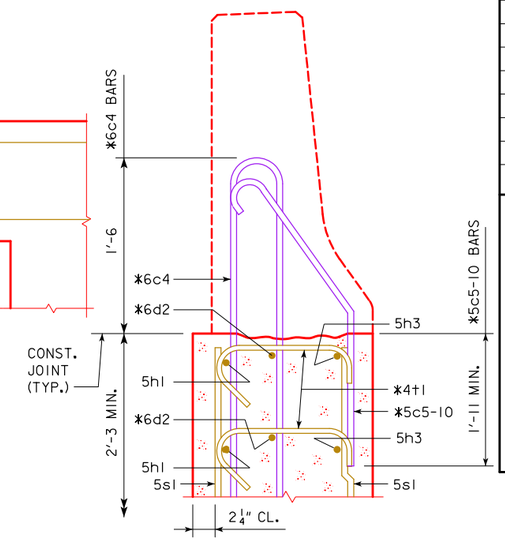

SECTION B-B

* BARRIER RAIL END SECTION BARS TO BE PLACED WITH ABUTMENT WING.

SEE BARRIER RAIL END SECTION SHEET IN THESE PLANS FOR DETAILS OF REINFORCING BARS 6c3, 6c4, 5c5-10, 6d2 & 4+1.

REINFORCING BAR LIST - ONE ABUT. WING

BAR	LOCATION	SHAPE	NO.	LENGTH	WEIGHT
5h1	HORIZONTAL BACK FACE		10	6'-8	70
5h3	HORIZONTAL TRAFFIC FACE		10	6'-9	70
5s1	VERTICAL BOTH FACES		16	9'-1	152
	REINFORCING STEEL EPOXY COATED - TOTAL (LBS.)				292

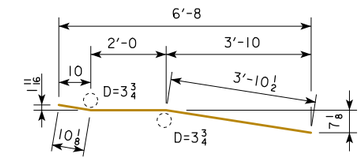

5h3

NOTE: ALL DIMENSIONS ARE OUT TO OUT. D = PIN DIAMETER.

BENT BAR DETAILS

CONCRETE PLACEMENT SUMMARY

CONCRETE	TOTAL
ONE ABUTMENT WING	2.7
TOTAL (CU. YDS.)	2.7

NOTE:

CONCRETE AND REINFORCING STEEL QUANTITIES ARE INCLUDED ON THE SUMMARY QUANTITIES SHEET.

PROGRESS PLANS
6/10/2019

DESIGN FOR 0° SKEW

1097'-0 X 40'-0 PRETENSIONED PRESTRESSED CONCRETE BEAM W.B. BRIDGE

156'-0 END SPANS 157'-0 INTERIOR SPAN

ABUTMENT WING DETAILS

IA 2 STA. 400+85.00, LT. 32.00' JUNE 2019

FREMONT COUNTY

IOWA DEPARTMENT OF TRANSPORTATION - HIGHWAY DIVISION

DESIGN SHEET NO. 10 OF ? FILE NO. 31719 DESIGN NO. 219

ABUTMENT NOTES:

MINIMUM CLEAR DISTANCE FROM FACE OF CONCRETE TO NEAR REINFORCING BAR IS TO BE 2" UNLESS OTHERWISE NOTED OR SHOWN.

THE MASKWALL IS TO BE POURED BEFORE THE SUPERSTRUCTURE DECK IS POURED.

CONSTRUCTION JOINT KEYWAYS ARE TO BE FORMED WITH BEVELED 2x6's.

THE PORTION OF THE BACKWALL CONTAINING THE ABUTMENT ANCHORAGE OF THE EXPANSION DEVICE IS TO BE PLACED AFTER THE BRIDGE DECK IS PLACED.

CONCRETE SEALER IS TO BE APPLIED TO THE ABUTMENT BRIDGE SEAT IN ACCORDANCE WITH THE CURRENT IOWA D.O.T. STANDARD SPECIFICATIONS.

THE COST OF PREFORMED EXPANSION JOINT FILLER, AND COST OF FURNISHING AND PLACING CONCRETE SEALER IS TO BE INCLUDED IN THE PRICE BID FOR "STRUCTURAL CONCRETE (BRIDGE)".

PAVING NOTCH DOWELS SHALL BE STAINLESS STEEL DEFORMED BAR GRADE 60, MEETING THE REQUIREMENTS OF MATERIALS I.M. 452.

IF NECESSARY TO PREVENT DAMAGE TO THE END OF THE BRIDGE DECK AND BACKWALL FROM CONSTRUCTION EQUIPMENT, AN APPROPRIATE METHOD OF PROTECTION APPROVED BY THE ENGINEER SHALL BE PROVIDED BY THE BRIDGE CONTRACTOR AT NO EXTRA COST TO THE STATE.

BENT BAR DETAILS

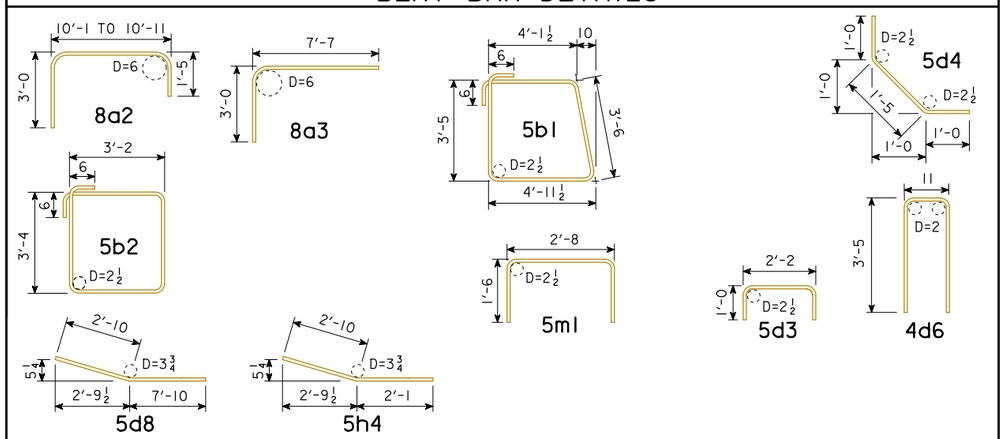

NOTE: ALL DIMENSIONS ARE OUT TO OUT. D = PIN DIA

REINFORCING BAR LIST - ONE ABUTMENT

	BAR	LOCATION	SHAPE	NO.	LENGTH	WEIGHT
EPOXY COATED BARS	8a1	FOOTING LONGITUDINAL		13	42'-11	1490
	8a2	WING FOOTING		10	14'-11	398
	8a3	WING FOOTING		10	10'-7	283
	5b1	FOOTING HOOPS		64	17'-0	1135
	5b2	WING FOOTING HOOPS		10	14'-0	146
	6d1	BACKWALL VERTICAL B.F.		79	7'-11	939
	5d2	BACKWALL VERTICAL F.F.		39	6'-10	278
	5d3	PAVING NOTCH		39	4'-2	169
	5d4	PAVING NOTCH		39	3'-5	139
	4d6	BACKWALL VERTICAL HOOP		39	7'-9	202
	5d8	WING EXTENSION F.F. HORIZONTAL		14	10'-8	156
	5d9	WING EXTENSION B.F. HORIZONTAL		14	10'-8	156
	5e1	MASKWALL VERTICAL		16	7'-4	122
	5e2	WING EXTENSION VERTICAL		36	8'-5	316
	5f3	MASKWALL HORIZONTAL		24	4'-10	121
	5g1	BACKWALL LONGITUDINAL		32	20'-11	698
	5g2	BACKWALL DOWELS		32	4'-5	147
	5g3	PAVING NOTCH LONGITUDINAL		4	20'-11	87
	5h2	WING EXTENSION B.F. HORIZONTAL		6	4'-11	31
	5h4	WING EXTENSION F.F. HORIZONTAL		6	4'-11	31
	5m1	BEAM STEPS TRANSVERSE		24	5'-8	142
	5n1	BEAM STEPS LONGITUDINAL		24	3'-2	79
		REINFORCING STEEL - EPOXY COATED - TOTAL (LBS.)				7265
S.S. BARS	5d5	PAVING NOTCH DOWELS (STAINLESS STEEL)		20	3'-6	73
		STAINLESS STEEL - TOTAL (LBS.)				73

CONCRETE PLACEMENT QUANTITIES

LOCATION	WEST ABUT.	EAST ABUT.
FOOTING AND STEPS	37.9	37.9
BACKWALL BELOW CONSTR. JOINT	6.6	6.6
BACKWALL ABOVE CONSTR. JOINT	10.1	10.1
NORTH WING EXTENSION	3.3	3.3
SOUTH WING EXTENSION	3.3	3.3
NORTH WING MASKWALL	0.5	0.5
SOUTH WING MASKWALL	0.5	0.5
TOTAL (C.Y.)	62.2	62.2

NOTE:
CONCRETE AND REINFORCING STEEL QUANTITIES ARE INCLUDED ON THE SUMMARY QUANTITIES SHEET.

PROGRESS PLANS
6/10/2019

DESIGN FOR 0° SKEW

1097'-0 X 40'-0 PRETENSIONED PRESTRESSED CONCRETE BEAM W.B. BRIDGE

156'-0 END SPANS 157'-0 INTERIOR SPAN

ABUTMENT QUANTITIES

IA 2 STA. 400+85.00, LT. 32.00' JUNE 2019

FREMONT COUNTY

IOWA DEPARTMENT OF TRANSPORTATION - HIGHWAY DIVISION

DESIGN SHEET NO. 11 OF 2 FILE NO. 31719 DESIGN NO. 219

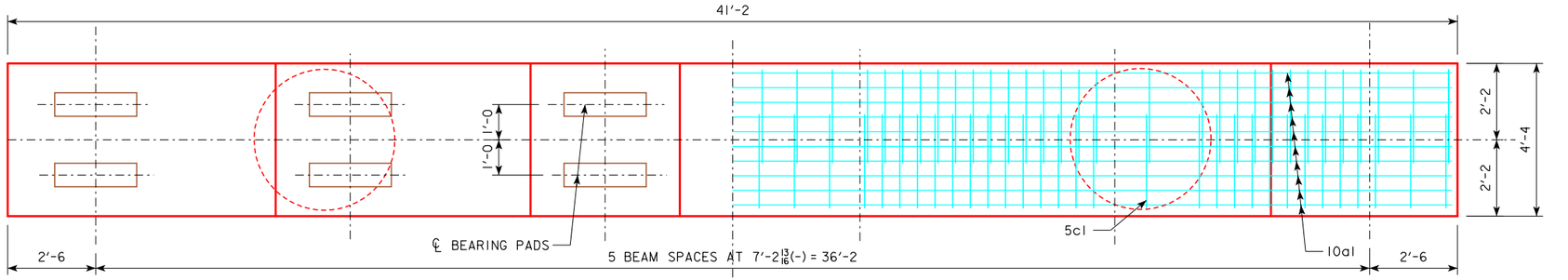

PIER CAP PLAN

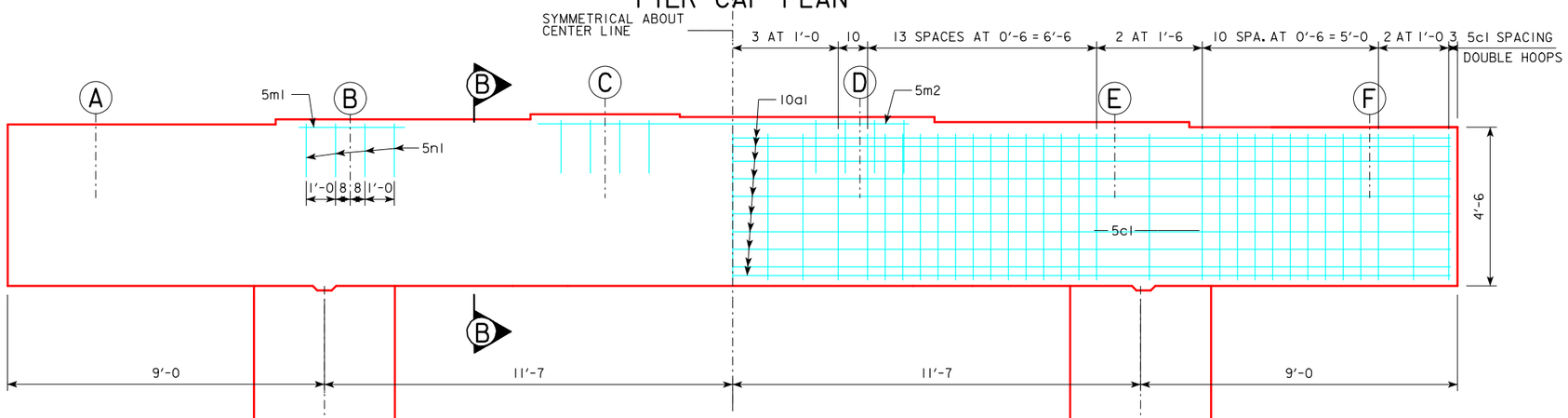

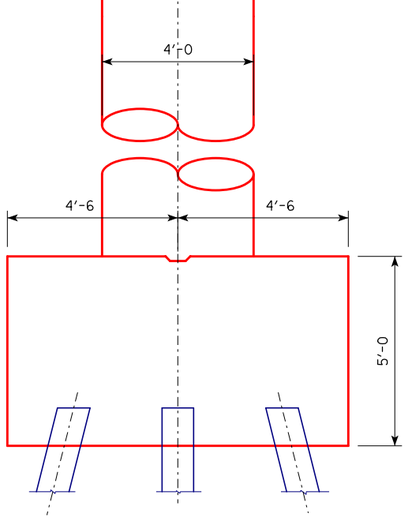

FRONT ELEVATION

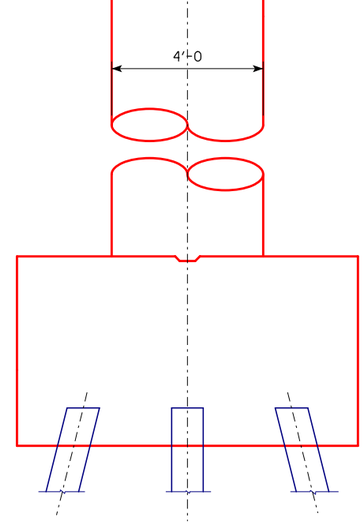

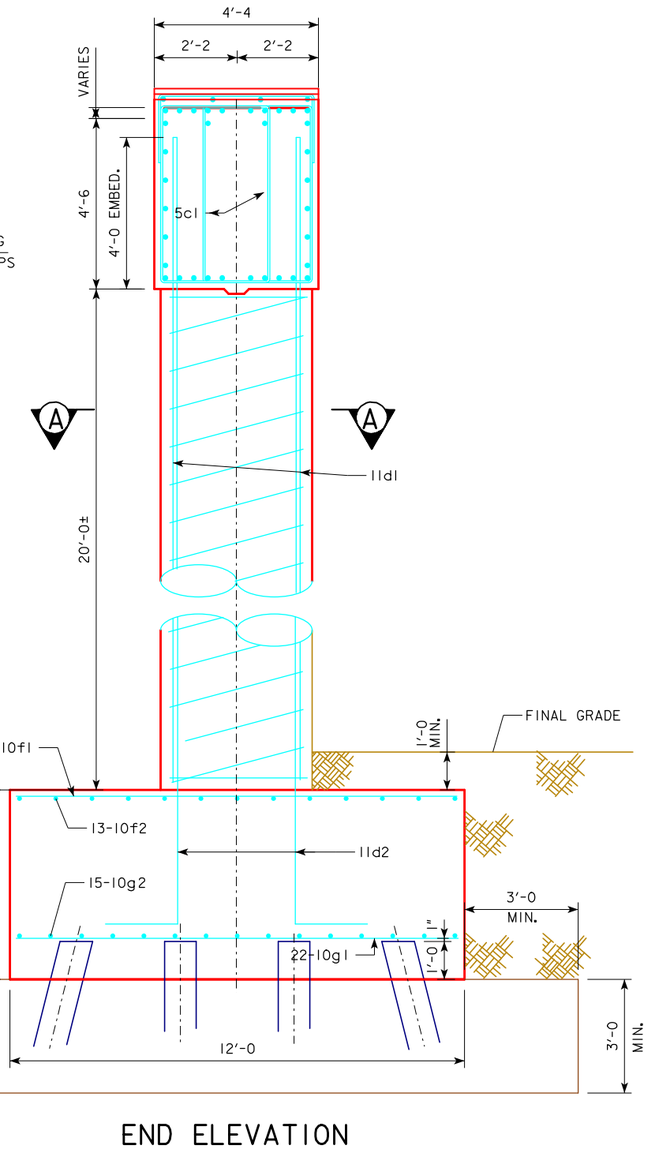

END ELEVATION

THE LUMP SUM BID ITEM, "EXCAVATE AND DEWATER" SHALL INCLUDE ALL COSTS ASSOCIATED WITH THE EXCAVATION AND DEWATERING REQUIRED TO CONSTRUCT THE PIER FOOTINGS IN THE DRY, IN ACCORDANCE WITH SECTION 2405, OF THE STANDARD SPECIFICATIONS. THE LENGTH AND WIDTH OF THE SEAL COAT WAS BASED ON THE REQUIRED ONE FOOT CLEARANCE BETWEEN THE TIP OF THE SHEET PILES AND THE BATTERED PILING. THE CONCRETE SEAL COAT, IF USED, SHALL BE 3'-0 FEET THICK, BASED ON A WATER ELEVATION OF _____. IF THE WATER ELEVATION IS HIGHER THAN _____ AT THE TIME OF CONSTRUCTION, A LARGER SEAL COAT MAY BE REQUIRED TO MAINTAIN THE CLEARANCE BETWEEN THE SHEET PILES AND BATTERED PILING. THE BRIDGE ENGINEER SHALL BE NOTIFIED BEFORE USING A LARGER SEAL COAT.

DO NOT SCALE DRAWING

DESIGN FOR 0° SKEW

1097'-0 X 40'-0 PRETENSIONED PRESTRESSED CONCRETE BEAM W.B. BRIDGE

156'-0 END SPANS — 157'-0 INTERIOR SPAN

PIER DETAILS - FRAME PIER OPTION

IA 2 STA. 400+85.00, LT. 32.00' — JUNE 2019

FREMONT COUNTY

IOWA DEPARTMENT OF TRANSPORTATION - HIGHWAY DIVISION

DESIGN SHEET NO. 12 OF ? FILE NO. 31719 DESIGN NO. 219

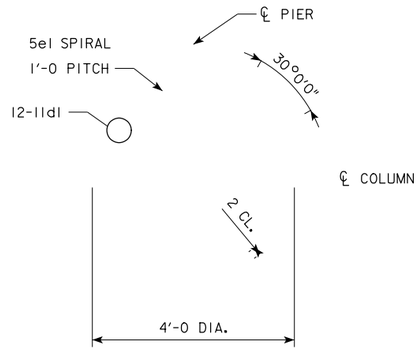

SECTION A-A

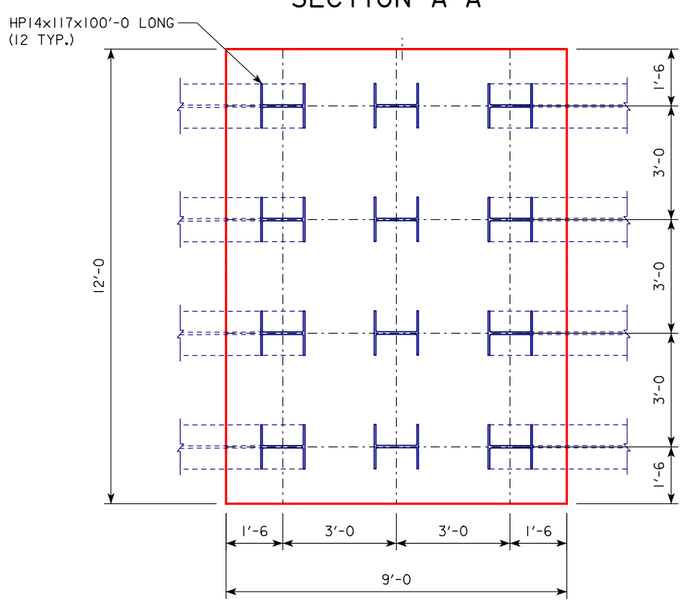

FOOTING PLAN

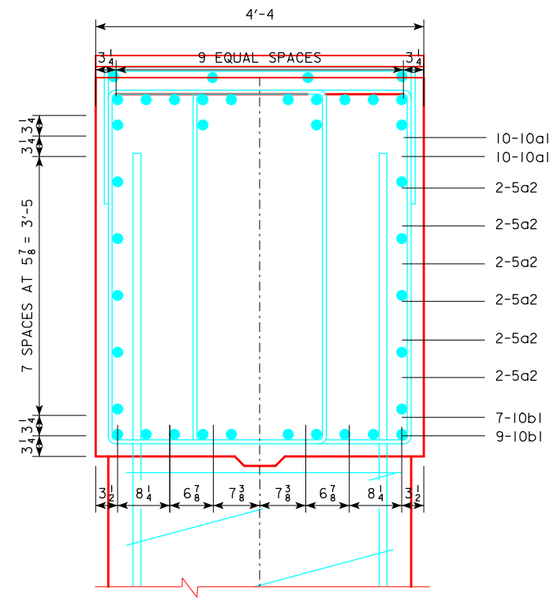

SECTION B-B

STEP ELEVATIONS						
	BEAM A	BEAM B	BEAM C	BEAM D	BEAM E	BEAM F
PIER 1						
PIER 2						
PIER 3						
PIER 4						
PIER 5						
PIER 6						

REINFORCING BAR LIST - PIER

BAR	LOCATION	SHAPE	NO.	LENGTH	WEIGHT
10a1	PIER CAP, LONGITUDINAL, TOP		26	40'-10	4568
5a2	PIER CAP, LONGITUDINAL, SIDES		8	40'-10	341
10b1	PIER CAP, LONGITUDINAL, BOTTOM		15	40'-10	2636
5c1	PIER CAP, HOOPS		220	13'-10	3174
5n1	PIER CAP, UNDER BEAM		12	7'-0	88
5m1	PIER CAP, UNDER BEAM		12	4'-0	50
11d1	PIER COLUMN, VERTICALS		24	25'-0	3188
11d2	PIER FOOTING TO COLUMN DOWELS		24	12'-6	1594
5e1	PIER COLUMN, SPIRAL		2	280'-0	584
10f1	PIER FOOTING, TRASVERSE, TOP		20	8'-8	746
10f2	PIER FOOTING, LONGITUDINAL, TOP		26	11'-8	1305
10g1	PIER FOOTING, TRASVERSE, BOTTOM		44	8'-8	1641
10g2	PIER FOOTING, LONGITUDINAL, BOTTOM		30	11'-8	1506
	REINFORCING STEEL - TOTAL (LBS.)				21421

CONCRETE PLACEMENT QUANT. PIER

LOCATION	QUANTITY
COLUMNS	
CAP	
TOTAL (CU. YDS.)	

ESTIMATED QUANTITIES PIER

ITEM	UNIT	QUANTITY
STRUCTURAL CONCRETE (BRIDGE)	CY	
REINFORCING STEEL	LBS	

BENT BAR DETAILS

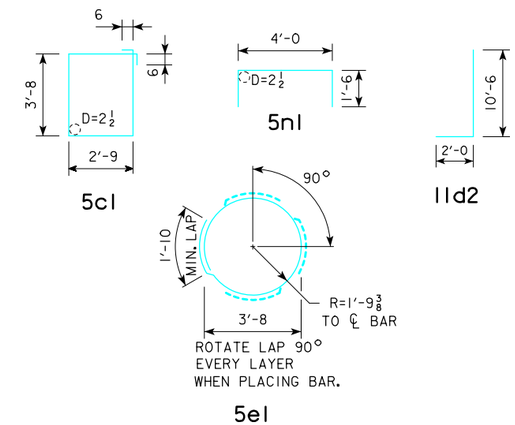

NOTE: ALL DIMENSIONS ARE OUT TO OUT. D= PIN DIAMETER.

PROGRESS PLANS
6/10/2019

DESIGN FOR 0° SKEW

1097'-0 X 40'-0 PRETENSIONED PRESTRESSED CONCRETE BEAM W.B. BRIDGE

156'-0 END SPANS 157'-0 INTERIOR SPAN

PIER DETAILS - FRAME PIER OPTION

IA 2 STA. 400+85.00, LT. 32.00' JUNE 2019

FREMONT COUNTY

IOWA DEPARTMENT OF TRANSPORTATION - HIGHWAY DIVISION

DESIGN SHEET NO. 13 OF ? FILE NO. 31719 DESIGN NO. 219

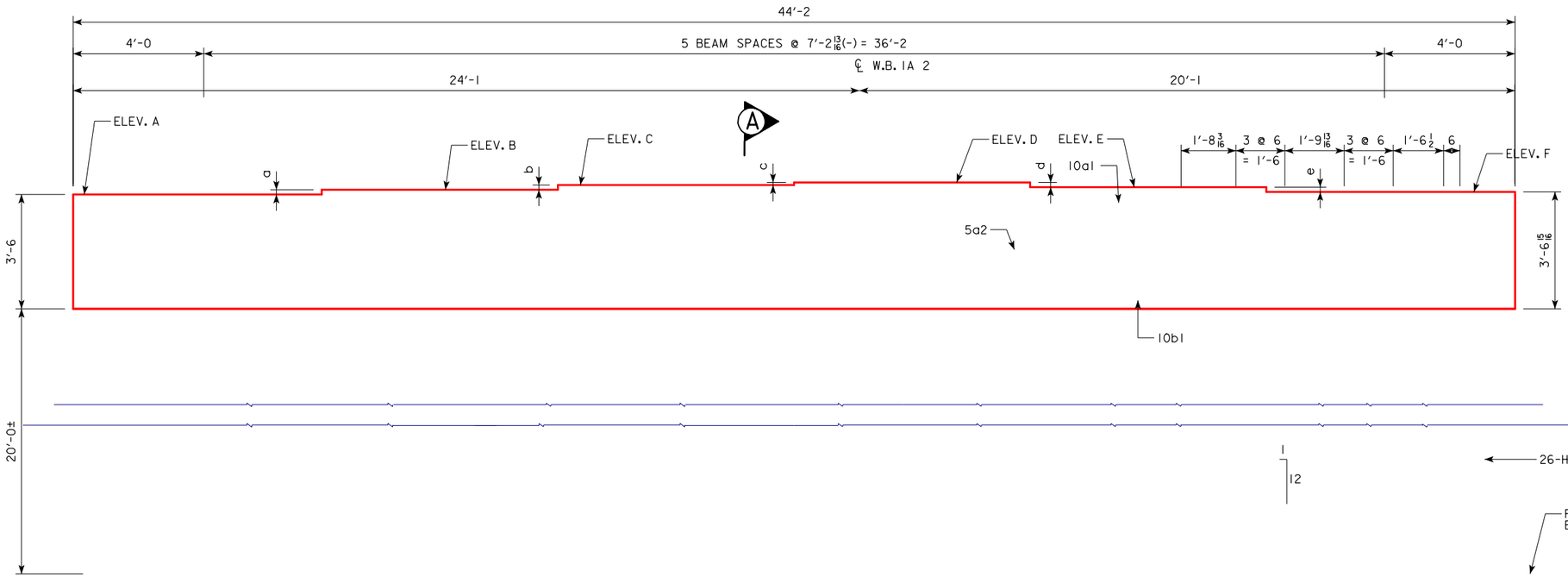

PILE CAP ELEVATION

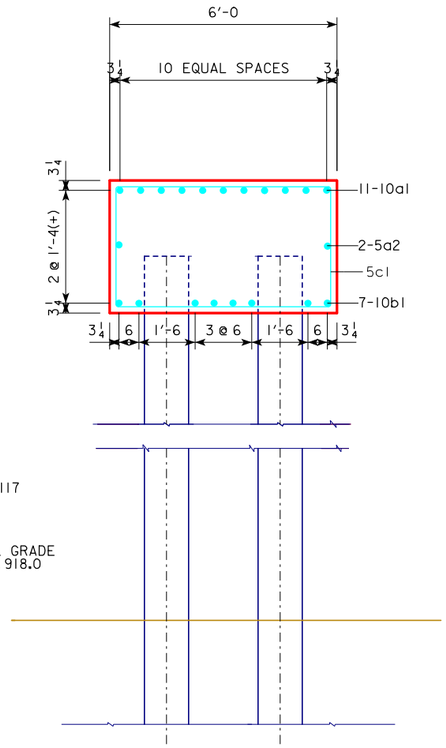

SECTION A-A

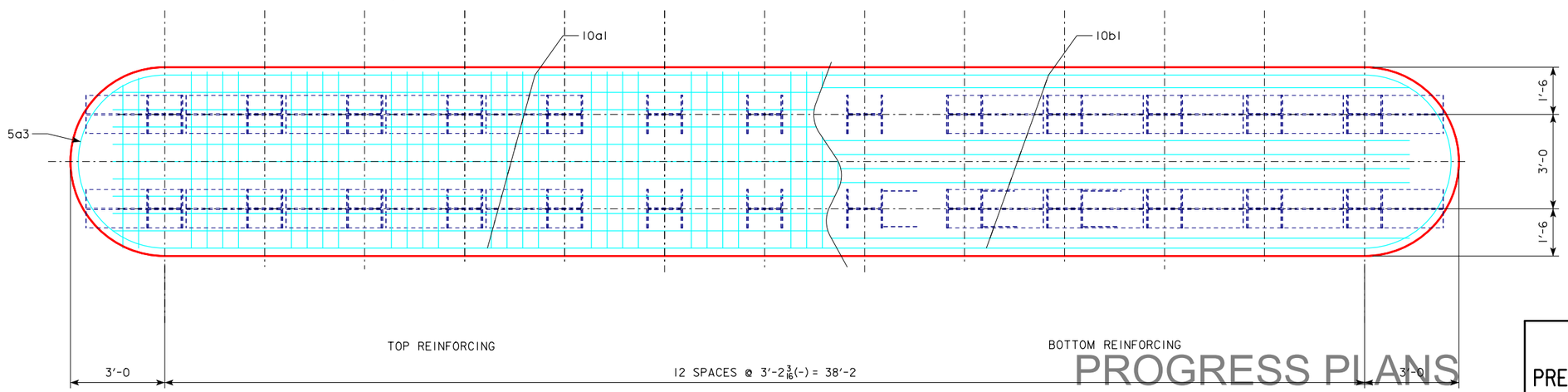

PILE CAP PLAN

NOTE:
1. THIS SHEET IS FOR THE INITIAL BUILD OF THE PILE BENT DURING PROJECT STAGE 2.

PROGRESS PLANS
6/10/2019

DESIGN FOR 0° SKEW

1097'-0 X 40'-0 PRETENSIONED PRESTRESSED CONCRETE BEAM W.B. BRIDGE

156'-0 END SPANS — 157'-0 INTERIOR SPAN

PIER DETAILS - PILE BENT OPTION

IA 2 STA. 400+85.00, LT. 32.00' — JUNE 2019

FREMONT COUNTY

IOWA DEPARTMENT OF TRANSPORTATION - HIGHWAY DIVISION

DESIGN SHEET NO. 14 OF 2 FILE NO. 31719 DESIGN NO. 219

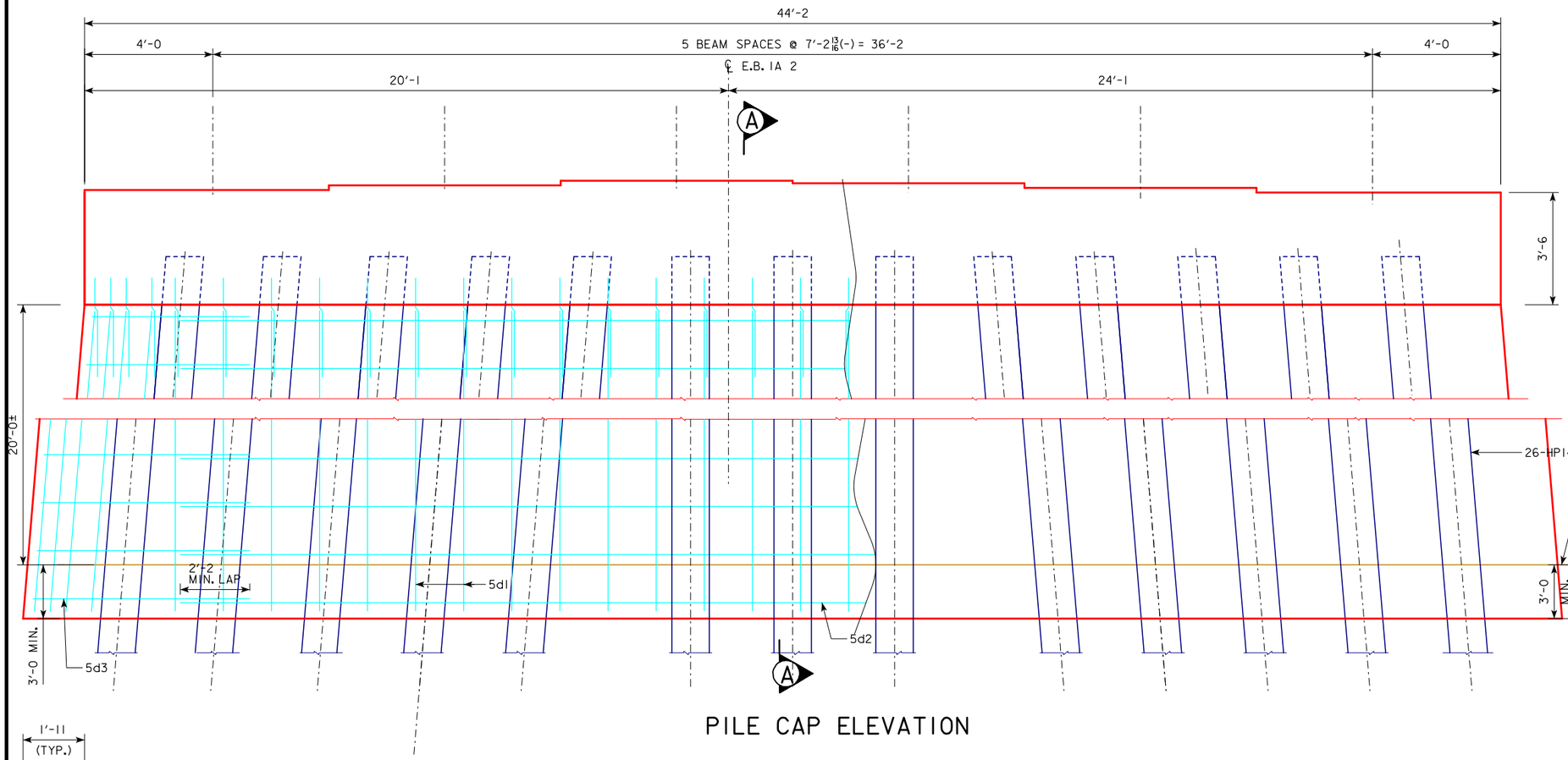

PILE CAP ELEVATION

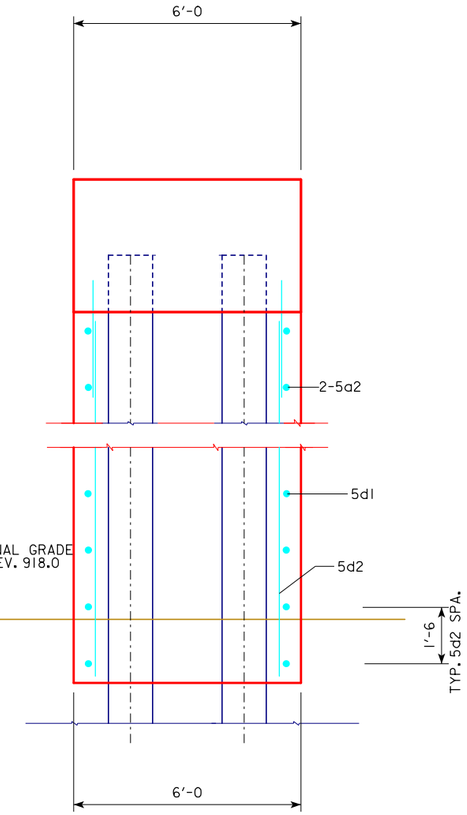

SECTION A-A

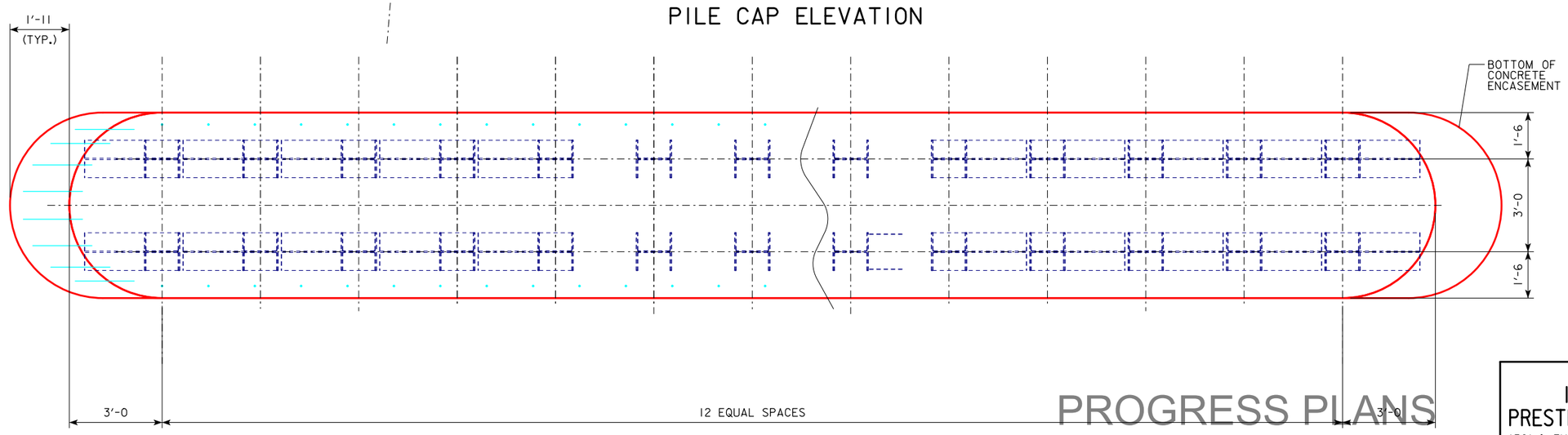

PILE CAP PLAN

PROGRESS PLANS
6/10/2019

DESIGN FOR 0° SKEW

1097'-0 X 40'-0 PRETENSIONED
PRESTRESSED CONCRETE BEAM W.B. BRIDGE

156'-0 END SPANS 157'-0 INTERIOR SPAN

PIER DETAILS - PILE BENT OPTION

IA 2 STA. 400+85.00, LT. 32.00' JUNE 2019

FREMONT COUNTY

IOWA DEPARTMENT OF TRANSPORTATION - HIGHWAY DIVISION

DESIGN SHEET NO. 15 OF 2 FILE NO. 31719 DESIGN NO. 219

DESIGN TEAM Stanley Consultants Inc. | FREMONT COUNTY | PROJECT NUMBER NHSX-002-1(123)--3H-36 | SHEET NUMBER 72

6/10/2019 12:07:49 AM untitled pw:\\projectwise.dot.int.lan:PWMain\Documents\Projects\3600207019\BRFinal\Stanley\BRG_36002123.dgn 360219S015 11x17_pdf.pltcfg

STEP ELEVATIONS

	BEAM A	BEAM B	BEAM C	BEAM D	BEAM E	BEAM F
PIER 1						
PIER 2						
PIER 3						
PIER 4						
PIER 5						
PIER 6						

REINFORCING BAR LIST - PIER STAGE 1

BAR	LOCATION	SHAPE	NO.	LENGTH	WEIGHT
10a1	PIER CAP, LONGITUDINAL, TOP		26	40'-10	4568
5a2	PIER CAP, LONGITUDINAL, SIDES		8	40'-10	341
10b1	PIER CAP, LONGITUDINAL, BOTTOM		15	40'-10	2636
5c1	PIER CAP, HOOPS		220	13'-10	3174
5n1	PIER CAP, UNDER BEAM		12	7'-0	88
5m1	PIER CAP, UNDER BEAM		12	4'-0	50
11d1	PIER COLUMN, VERTICALS		24	25'-0	3188
11d2	PIER FOOTING TO COLUMN DOWELS		24	12'-6	1594
5e1	PIER COLUMN, SPIRAL		2	280'-0	584
10f1	PIER FOOTING, TRASVERSE, TOP		20	8'-8	746
10f2	PIER FOOTING, LONGITUDINAL, TOP		26	11'-8	1305
10g1	PIER FOOTING, TRASVERSE, BOTTOM		44	8'-8	1641
10g2	PIER FOOTING, LONGITUDINAL, TOP		30	11'-8	1506
	REINFORCING STEEL - TOTAL (LBS.)				21421

CONCRETE PLACEMENT QUANT. PIER

LOCATION	QUANTITY
TOTAL (CU. YDS.)	

ESTIMATED QUANTITIES PIER

ITEM	UNIT	QUANTITY

BENT BAR DETAILS

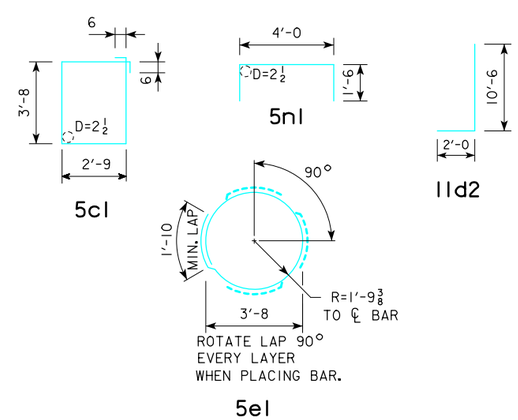

NOTE: ALL DIMENSIONS ARE OUT TO OUT. D= PIN DIAMETER.

REINFORCING BAR LIST - PIER STAGE 2

BAR	LOCATION	SHAPE	NO.	LENGTH	WEIGHT
10a1	PIER CAP, LONGITUDINAL, TOP		26	40'-10	4568
5a2	PIER CAP, LONGITUDINAL, SIDES		8	40'-10	341
10b1	PIER CAP, LONGITUDINAL, BOTTOM		15	40'-10	2636
5c1	PIER CAP, HOOPS		220	13'-10	3174
5n1	PIER CAP, UNDER BEAM		12	7'-0	88
5m1	PIER CAP, UNDER BEAM		12	4'-0	50
11d1	PIER COLUMN, VERTICALS		24	25'-0	3188
11d2	PIER FOOTING TO COLUMN DOWELS		24	12'-6	1594
5e1	PIER COLUMN, SPIRAL		2	280'-0	584
10f1	PIER FOOTING, TRASVERSE, TOP		20	8'-8	746
10f2	PIER FOOTING, LONGITUDINAL, TOP		26	11'-8	1305
10g1	PIER FOOTING, TRASVERSE, BOTTOM		44	8'-8	1641
10g2	PIER FOOTING, LONGITUDINAL, TOP		30	11'-8	1506
	REINFORCING STEEL - TOTAL (LBS.)				21421

CONCRETE PLACEMENT QUANT. PIER

LOCATION	QUANTITY
COLUMNS	
CAP	
TOTAL (CU. YDS.)	

ESTIMATED QUANTITIES PIER

ITEM	UNIT	QUANTITY
STRUCTURAL CONCRETE (BRIDGE)	CY	
REINFORCING STEEL	LBS	

BENT BAR DETAILS

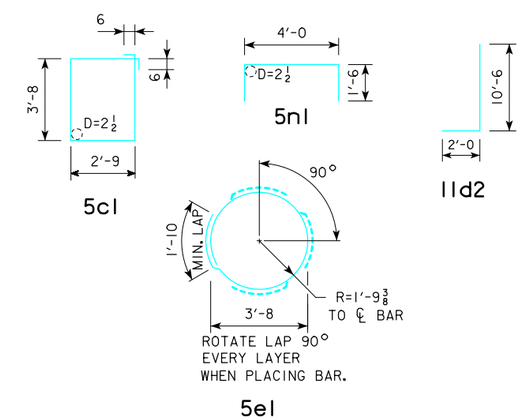

NOTE: ALL DIMENSIONS ARE OUT TO OUT. D= PIN DIAMETER.

PROGRESS PLANS
6/10/2019

DESIGN FOR 0° SKEW

1097'-0 X 40'-0 PRETENSIONED PRESTRESSED CONCRETE BEAM W.B. BRIDGE

156'-0 END SPANS 157'-0 INTERIOR SPAN

PIER DETAILS - PILE BENT OPTION

IA 2 STA. 400+85.00, LT. 32.00' JUNE 2019

FREMONT COUNTY

IOWA DEPARTMENT OF TRANSPORTATION - HIGHWAY DIVISION

DESIGN SHEET NO. 16 OF 2 FILE NO. 31719 DESIGN NO. 219

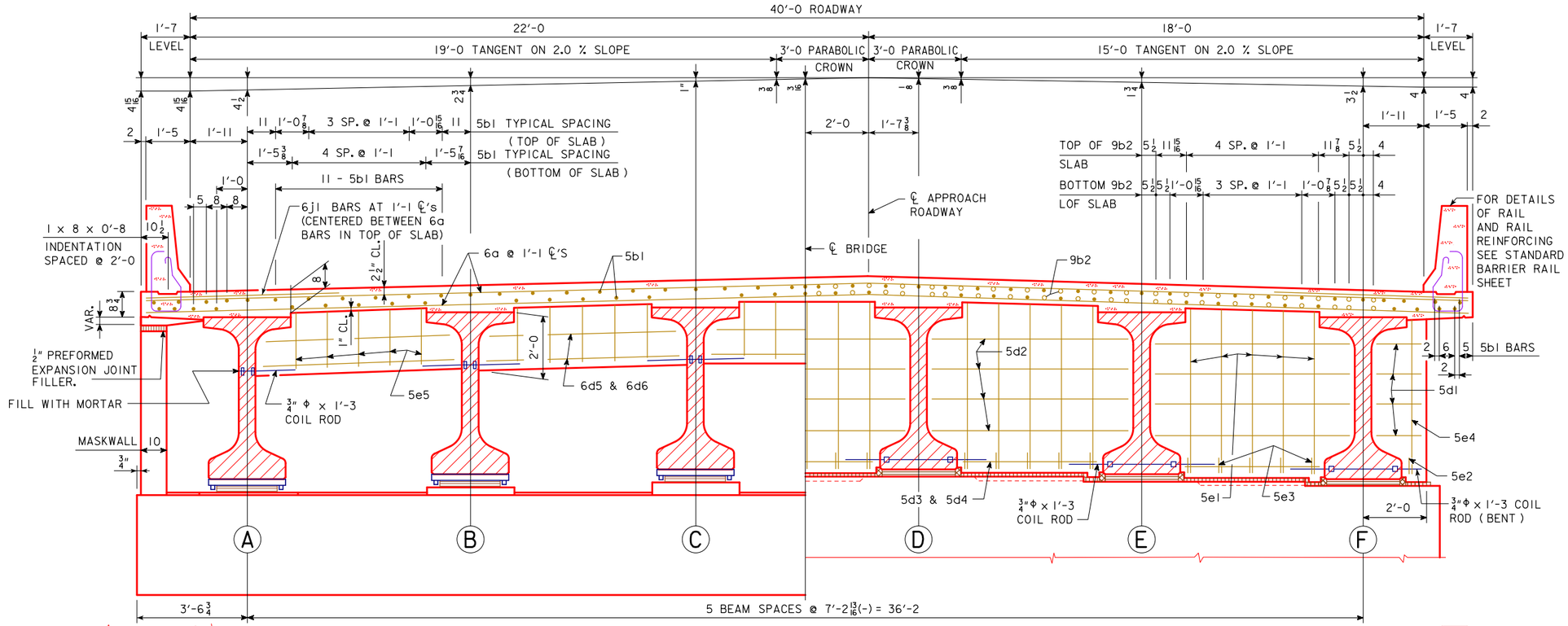

HALF SECTION NEAR ABUTMENT

SLAB AREA = 29.24 SQ. FT.
SLAB AREA DOES NOT INCLUDE THE HAUNCH.

NOTE: FOR DETAILS OF INTERMEDIATE DIAPHRAGMS SEE DESIGN SHEET ____.

HALF SECTION NEAR PIER

(FIXED PIER SHOWN)

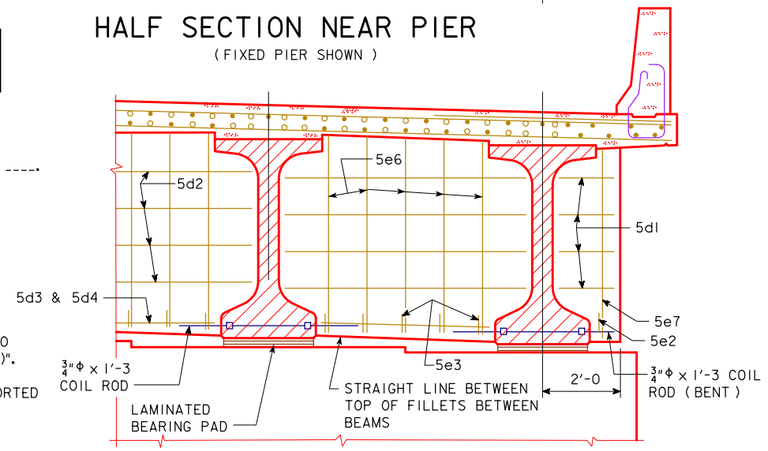

HALF SECTION NEAR PIER

(EXPANSION PIER SHOWN)

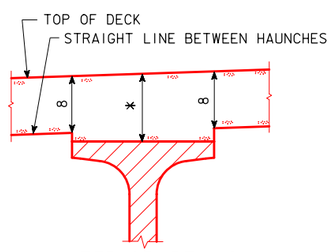

INTERIOR BEAMS

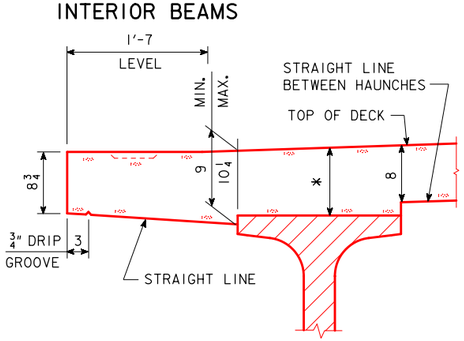

EXTERIOR BEAMS

TYPICAL DECK AND HAUNCH DETAIL

* FOR DECK THICKNESS OVER BEAMS SEE HAUNCH AND CAMBER DETAILS ON DESIGN SHEET ____.

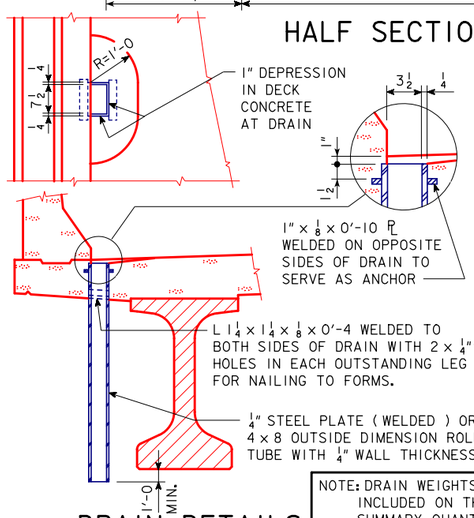

DRAIN DETAILS

NOTE: DRAIN WEIGHTS ARE INCLUDED ON THE SUMMARY QUANTITIES SHEET.

NOTE:
DRAINS ARE TO BE GALVANIZED. ____ DRAINS REQUIRED.
SEE "SITUATION PLAN" FOR LOCATION. WEIGHT OF DRAINS IS INCLUDED IN THE QUANTITY FOR "____".
WEIGHT IS BASED ON ROLLED TUBE.

DATA FOR ONE DRAIN	
BEAM SIZE	BTE
DRAIN WEIGHT (LBS.)	136
DRAIN LENGTH (FT.)	6'-11 3/4

SUPERSTRUCTURE NOTES:

THE BRIDGE DECK AS SHOWN INCLUDES 1/2" INTEGRAL WEARING SURFACE.

THE PIER AND ABUTMENT DIAPHRAGM CONCRETE IS TO BE PLACED MONOLITHICALLY WITH THE BRIDGE DECK.

COST OF ALL PREFORMED EXPANSION JOINT FILLER MATERIAL IS TO BE INCLUDED IN THE PRICE BID FOR "STRUCTURAL CONCRETE (BRIDGE)".

ALL BEAMS ARE TO BE SET VERTICAL.

FORMS FOR THE BRIDGE DECK AND BARRIER RAIL ARE TO BE SUPPORTED BY THE PRESTRESSED CONCRETE BEAMS.

CLEAR DISTANCE FROM FACE OF CONCRETE TO NEAR REINFORCING BAR SHALL BE 2 INCHES UNLESS OTHERWISE NOTED OR SHOWN.

ALL DECK AND DIAPHRAGM REINFORCING IS TO BE WIRED IN PLACE AND ADEQUATELY SUPPORTED BEFORE CONCRETE IS PLACED.

TOP TRANSVERSE REINFORCING STEEL IS TO BE PARALLEL TO AND 2 1/2" CLEAR BELOW TOP OF DECK. BOTTOM TRANSVERSE REINFORCING STEEL IS TO BE PARALLEL TO AND 1" CLEAR ABOVE BOTTOM OF DECK. TOP AND BOTTOM REINFORCING STEEL IS TO BE SUPPORTED BY INDIVIDUAL BAR CHAIRS SPACED AT NOT MORE THAN 3'-0 CENTERS LONGITUDINALLY AND TRANSVERSELY, OR BY CONTINUOUS ROWS OF BAR-HIGH CHAIRS OR DECK BOLSTERS SPACED 4'-0 APART. I.M. 451.01 REQUIREMENTS SHALL APPLY FOR BAR CHAIRS, BAR HIGH CHAIRS, AND DECK BOLSTERS.

TRANSVERSE DECK REINFORCING MAY BE SPLICED WITH ONE LAP LOCATED AS FOLLOWS:

TOP BAR - LAP MIDWAY BETWEEN BEAMS (MIN. LAP = 1'-10).

BOTTOM BARS - LAP OVER BEAMS (MIN. LAP = 1'-10).

PAYMENT FOR REINFORCING BARS SHALL BE BASED ON NO SPLICES, AND NO ALLOWANCE SHALL BE MADE FOR THE ADDITIONAL LENGTH OF BAR REQUIRED FOR THE USE OF SPLICES.

DOT APPROVED PLANS
6/10/2019

DESIGN FOR 0° SKEW

1097'-0 X 40'-0 PRETENSIONED PRESTRESSED CONCRETE BEAM W.B. BRIDGE

156'-0 END SPANS — 157'-0 INTERIOR SPAN

TRANSVERSE SECTION

IA 2 STA. 400+85.00, LT. 32.00' — JUNE 2019

FREMONT COUNTY

IOWA DEPARTMENT OF TRANSPORTATION - HIGHWAY DIVISION

DESIGN SHEET NO. 17 OF ? FILE NO. 31719 DESIGN NO. 219

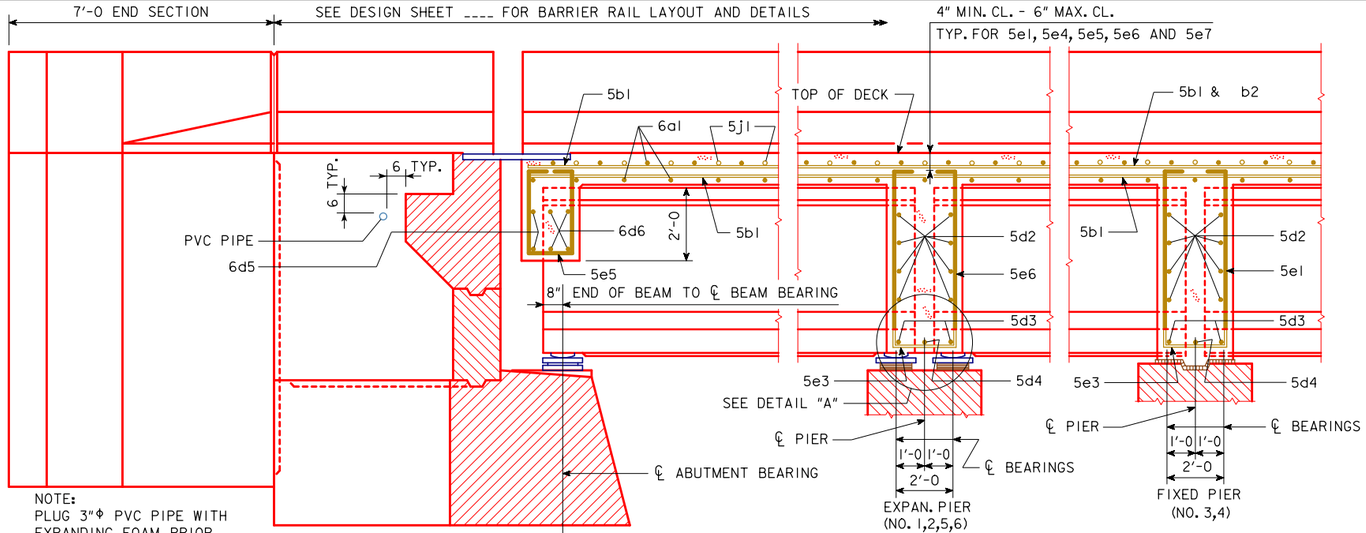

NOTE:
PLUG 3"Φ PVC PIPE WITH EXPANDING FOAM PRIOR TO BACKFILLING BEHIND ABUTMENTS.

PART LONGITUDINAL SECTION NEAR GUTTER

(FOR DETAILS OF INTERMEDIATE DIAPHRAGM SEE DESIGN SHEET ____).

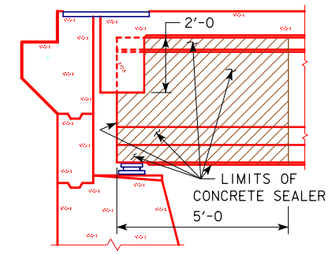

CONCRETE SEALER SHALL BE APPLIED TO THE ABUTMENT SEAT AND PRESTRESSED BEAM ENDS IN ACCORDANCE WITH ARTICLE 2403.03, P, 3, OF THE STANDARD SPECIFICATIONS. THE SEALING SHALL INCLUDE PORTIONS OF THE PRESTRESSED BEAM END THAT ARE NOT EMBEDDED IN THE ABUTMENT DIAPHRAGMS AS DETAILED ON THIS SHEET.

CONCRETE SEALER LIMITS FOR PRESTRESSED BEAM

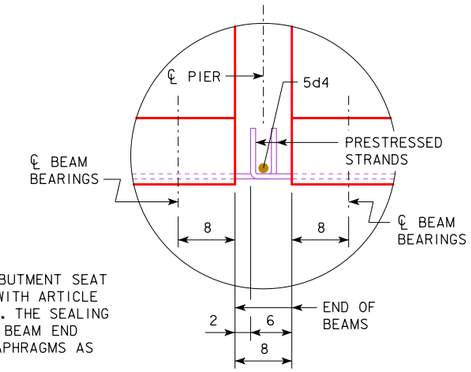

DETAIL "A"

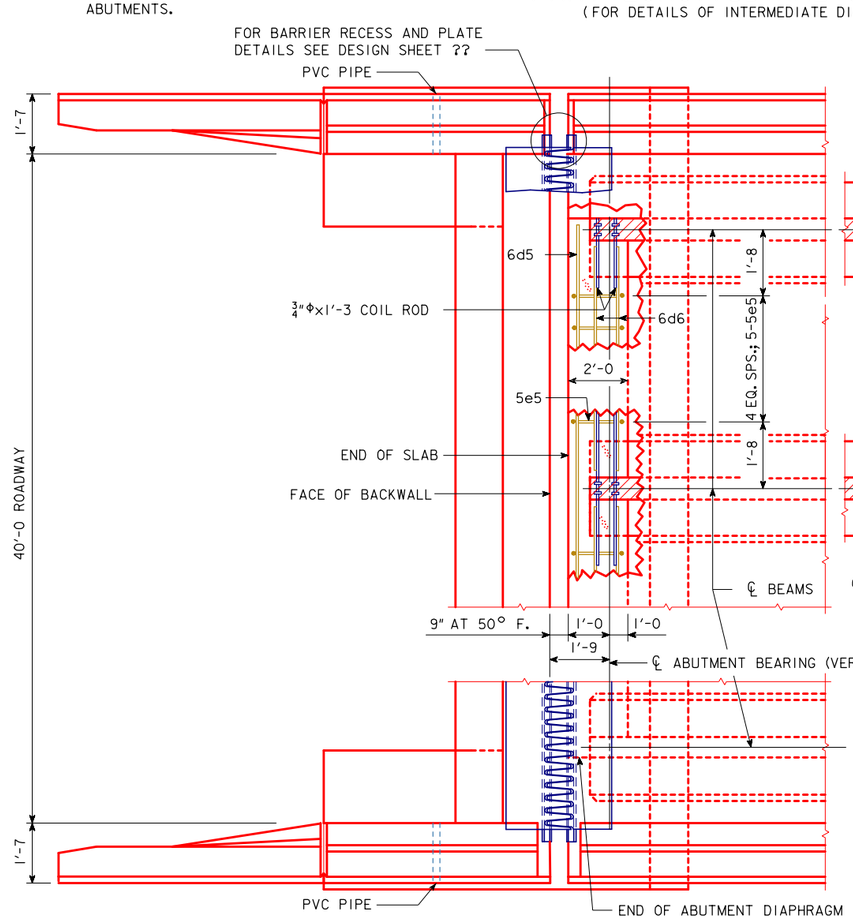

PART PLAN VIEW

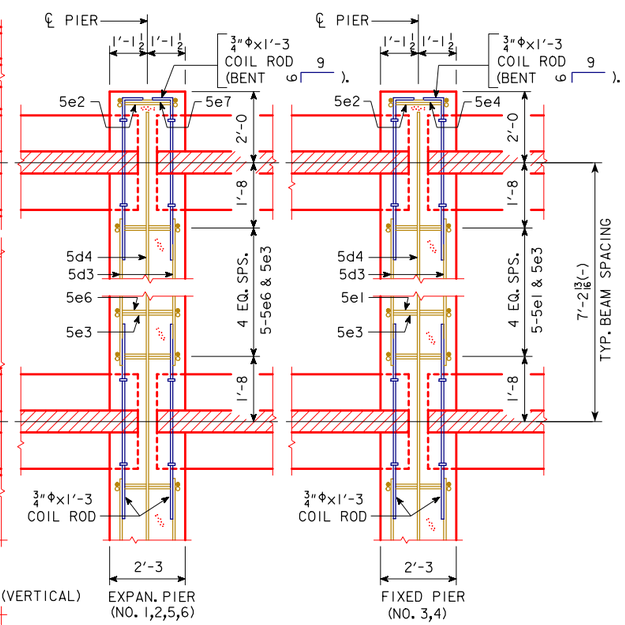

PART SECTION

(SEE CROSS SECTION THRU SLAB FOR NUMBER OF DIAPHRAGM HOOP BARS BETWEEN BEAMS)

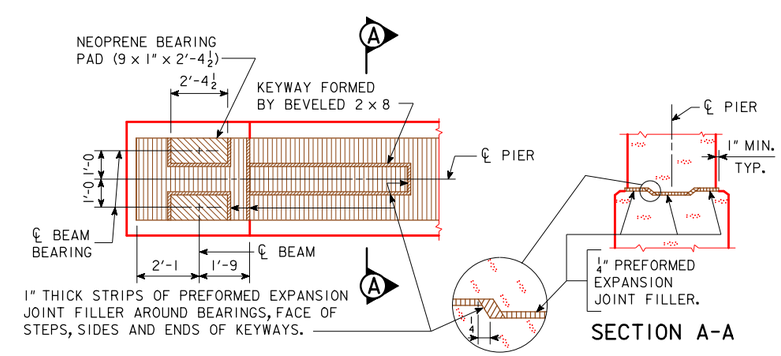

PART PLAN

SECTION A-A

TOP OF FIXED PIER DETAILS

PROGRESS PLANS
6/10/2019

DESIGN FOR 0° SKEW

1097'-0 X 40'-0 PRETENSIONED PRESTRESSED CONCRETE BEAM W.B. BRIDGE

156'-0 END SPANS 157'-0 INTERIOR SPAN

PART PLAN AND LONGITUDINAL SECTION

IA 2 STA. 400+85.00, LT. 32.00' JUNE 2019

FREMONT COUNTY

IOWA DEPARTMENT OF TRANSPORTATION - HIGHWAY DIVISION

DESIGN SHEET NO. 18 OF 2 FILE NO. 31719 DESIGN NO. 219

DESIGN TEAM Stanley Consultants Inc.	PART PLAN & LONGIT. SECTION - "BTC", "BTD" OR "BTE" BEAMS, STUB ABUT., 0° SKEW	STANDARD SHEET 4542-BTCDE	FREMONT COUNTY	PROJECT NUMBER NHSX-002-1(123)--3H-36	SHEET NUMBER 75

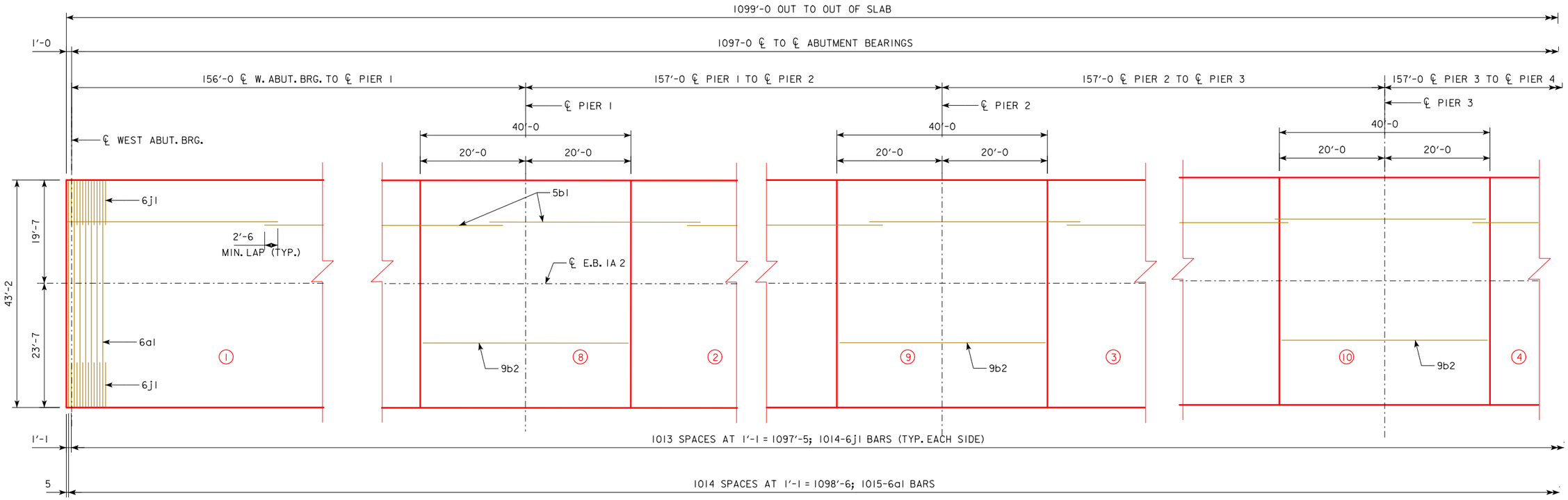

TOP SLAB REINFORCING LAYOUT

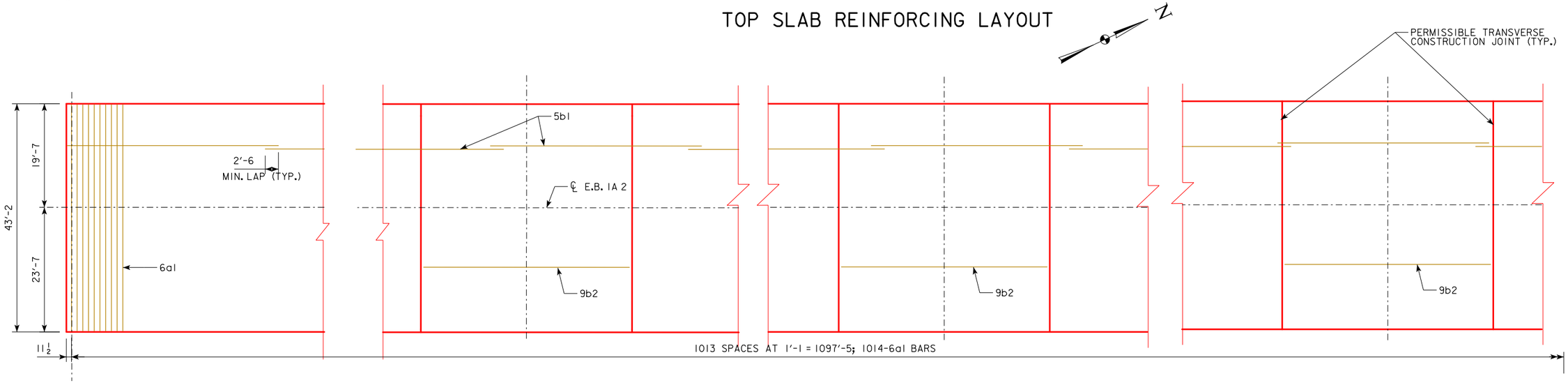

BOTTOM SLAB REINFORCING LAYOUT

PROGRESS PLANS
6/10/2019

NOTE: CONCRETE DECK SHALL BE PLACED IN SECTIONS AND SEQUENCES INDICATED. ALTERNATE PROCEDURES FOR PLACING DECK CONCRETE MAY BE SUBMITTED FOR APPROVAL TOGETHER WITH A STATEMENT OF PROPOSED METHOD AND EVIDENCE THAT THE CONTRACTOR POSSESSES THE NECESSARY EQUIPMENT AND FACILITIES TO ACCOMPLISH THE REQUIRED RESULTS. FOR APPROVED ALTERNATE PROCEDURES THE ENGINEER SHALL DETERMINE IF A RETARDING ADMIXTURE IS REQUIRED TO MAINTAIN PLASTICITY OF THE CONCRETE DECK DURING PLACEMENT.

DESIGN FOR 0° SKEW

1097'-0 X 40'-0 PRETENSIONED PRESTRESSED CONCRETE BEAM W.B. BRIDGE

156'-0 END SPANS — 157'-0 INTERIOR SPAN

SUPERSTRUCTURE DETAILS

1A 2 STA. 400+85.00, LT. 32.00' — JUNE 2019

FREMONT COUNTY

IOWA DEPARTMENT OF TRANSPORTATION - HIGHWAY DIVISION

DESIGN SHEET NO. 19 OF ? FILE NO. 31719 DESIGN NO. 219

DESIGN TEAM Stanley Consultants Inc. | FREMONT COUNTY | PROJECT NUMBER NHSX-002-1(123)--3H-36 | SHEET NUMBER 76

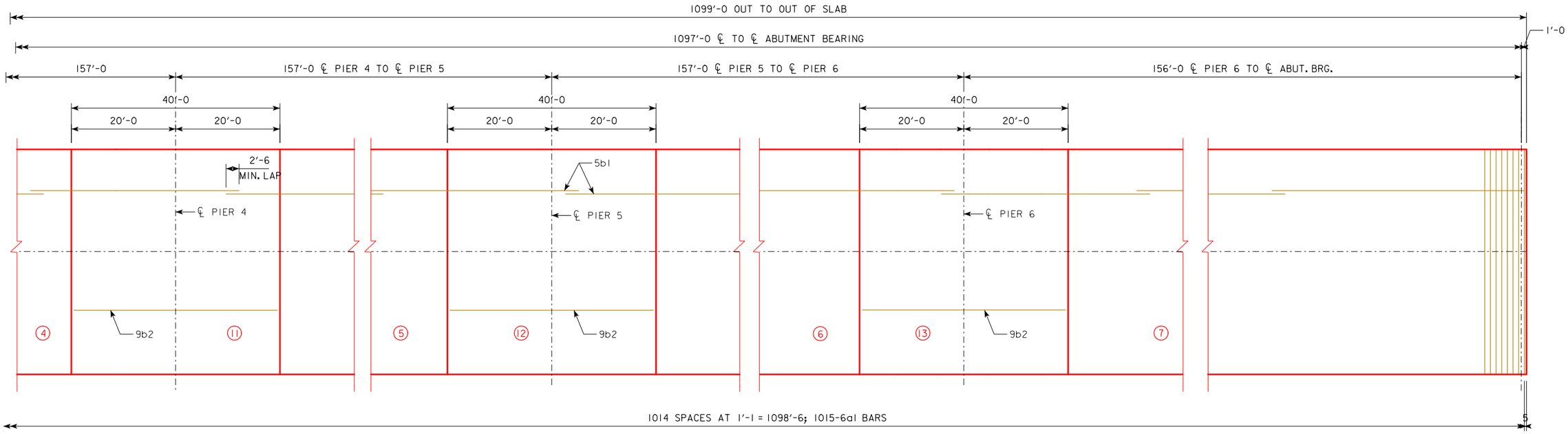

TOP SLAB REINFORCING LAYOUT

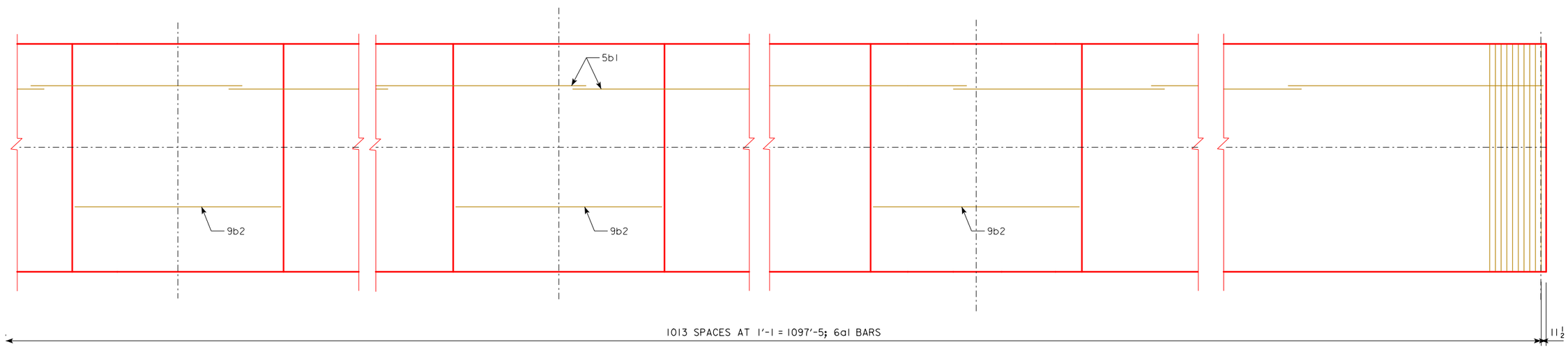

BOTTOM SLAB REINFORCING LAYOUT

PROGRESS PLANS
6/10/2019

DESIGN FOR 0° SKEW

1097'-0 X 40'-0 PRETENSIONED PRESTRESSED CONCRETE BEAM W.B. BRIDGE

156'-0 END SPANS — 157'-0 INTERIOR SPAN

SUPERSTRUCTURE DETAILS

IA 2 STA. 400+85.00, LT. 32.00' — JUNE 2019

FREMONT COUNTY

IOWA DEPARTMENT OF TRANSPORTATION - HIGHWAY DIVISION

DESIGN SHEET NO. 20 OF ? FILE NO. 31719 DESIGN NO. 219

DESIGN TEAM Stanley Consultants Inc. | FREMONT COUNTY | PROJECT NUMBER NHSX-002-1(123)--3H-36 | SHEET NUMBER 77

REINFORCING BAR LIST - DECK (EPOXY)

EPOXY COATED REINFORCING

BAR	LOCATION	SHAPE	NO.	LENGTH	WEIGHT
6a1	DECK TRANSV.		2029	42'-10	130537
5b1	DECK LONGIT.		2280	40'-0	95122
9b2	DECK LONGIT. OVER PIERS		474	39'-0	62852
5d1	PIER DIAPH. ENDS		48	4'-7	229
5d2	PIER DIAPH. LONGIT.		240	6'-4	1585
5d3	PIER DIAPH. LONGIT.		60	4'-4	271
5d4	PIER DIAPH. LONGIT.		6	40'-6	253
6d5	ABUT. DIAPH.		4	36'-4	218
6d6	ABUT. DIAPH. LONGIT.		40	6'-4	381
5e1	PIER DIAPH. HOOPS		50	13'-11	726
5e2	PIER DIAPH. TIES ENDS		12	2'-9	34
5e3	PIER DIAPH. TIES		125	3'-0	391
5e4	PIER DIAPH. HOOPS ENDS		4	13'-8	57
5e5	ABUT. DIAPH. HOOPS		50	7'-5	387
5e6	EXPAN. PIER DIAPH. HOOPS		100	13'-9	1434
5e7	EXPAN. PIER DIAPH. HOOPS ENDS		8	13'-6	113
6j1	DECK TRANSV. TOP (AT RAIL)		2046	6'-3	19207
	REINFORCING STEEL EPOXY COATED - TOTAL (LBS.)				313797

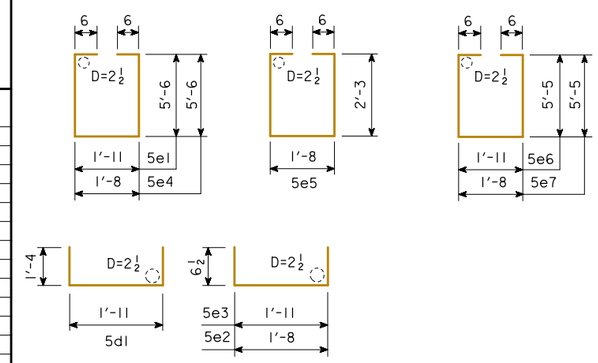

NOTE: ALL DIMENSIONS ARE OUT TO OUT. D= PIN DIAMETER.

BENT BAR DETAILS

CONCRETE PLACEMENT QUANTITIES

LOCATION	QUANTITY
SECTION 1, DECK & ABUT. DIAPH.	151.8
SECTION 2, DECK	124.7
SECTION 3, DECK	124.7
SECTION 4, DECK	124.7
SECTION 5, DECK	124.7
SECTION 6, DECK	124.7
SECTION 7, DECK & ABUT. DIAPH.	151.8
SECTION 8, DECK & PIER DIAPH.	59.6
SECTION 9, DECK & PIER DIAPH.	59.6
SECTION 10, DECK & PIER DIAPH.	59.6
SECTION 11, DECK & PIER DIAPH.	59.6
SECTION 12, DECK & PIER DIAPH.	59.6
SECTION 13, DECK & PIER DIAPH.	59.6
TOTAL (CU. YDS.)	1284.7

NOTE:
CONCRETE AND REINFORCING STEEL QUANTITIES ARE INCLUDED ON THE SUMMARY QUANTITIES SHEET.

CONCRETE PLACEMENT DIAGRAM

NOTE: CONCRETE DECK SHALL BE PLACED IN SECTIONS AND SEQUENCES INDICATED. ALTERNATE PROCEDURES FOR PLACING DECK CONCRETE MAY BE SUBMITTED FOR APPROVAL TOGETHER WITH A STATEMENT OF THE PROPOSED METHOD AND EVIDENCE THAT THE CONTRACTOR POSSESSES THE NECESSARY EQUIPMENT AND FACILITIES TO ACCOMPLISH THE REQUIRED RESULTS. FOR APPROVED ALTERNATE PROCEDURES THE ENGINEER SHALL DETERMINE IF A RETARDING ADMIXTURE IS REQUIRED TO MAINTAIN PLASTICITY OF THE CONCRETE DECK DURING PLACEMENT.

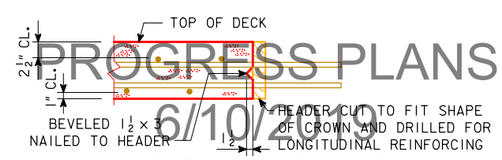

PROGRESS PLANS
6/10/2019

PERMISSIBLE TRANSVERSE DECK CONSTRUCTION JOINT

DESIGN FOR 0° SKEW

1097'-0 X 40'-0 PRETENSIONED PRESTRESSED CONCRETE BEAM W.B. BRIDGE

156'-0 END SPANS — 157'-0 INTERIOR SPAN

SUPERSTRUCTURE QUANTITIES & BAR LIST

IA 2 STA. 400+85.00, LT. 32.00' — JUNE 2019

FREMONT COUNTY

IOWA DEPARTMENT OF TRANSPORTATION - HIGHWAY DIVISION

DESIGN SHEET NO. 21 OF 2 FILE NO. 31719 DESIGN NO. 219

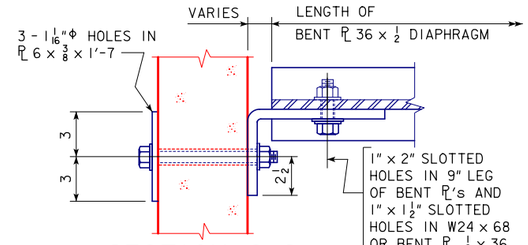

SECTION C-C

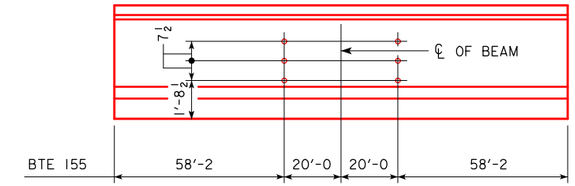

INTERMEDIATE DIAPHRAGM
BOLT HOLE LOCATIONS

NOTES:

ALL DIAPHRAGM MATERIALS, INCLUDING BOLTS, NUTS AND WASHERS SHALL BE GALVANIZED.

SHOP DRAWINGS OF THE STEEL DIAPHRAGMS SHOWING LAYOUT AND DETAILS OF THE DIAPHRAGMS SHALL BE SUBMITTED FOR APPROVAL.

ALL COSTS FOR FURNISHING AND INSTALLING STEEL INTERMEDIATE DIAPHRAGMS SHALL BE INCLUDED IN THE PRICE BID FOR STRUCTURAL STEEL.

THE 1 1/2"Φ HOLES FOR THE 7/8"Φ H.S. BOLTS SHALL BE CAST INTO THE WEB. DRILLING IS NOT ALLOWED.

THE 7/8"Φ H.S. BOLTS THROUGH THE WEB SHALL HAVE A THREAD LENGTH OF 3" MIN. AND 4" MAX. AND SHALL MEET THE REQUIREMENTS OF ASTM A449.

ALL BOLTS ARE TO BE TIGHTENED PRIOR TO PLACING BRIDGE FLOOR CONCRETE.

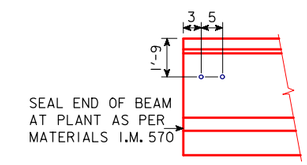

SEAL END OF BEAM AT PLANT AS PER MATERIALS I.M. 570

NOTE: STRUCTURAL STEEL WEIGHT IS INCLUDED ON THE SUMMARY QUANTITIES SHEET.

ALL SKEWS

STUB ABUT.

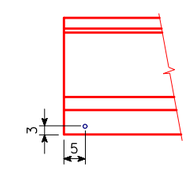

FIXED PIER

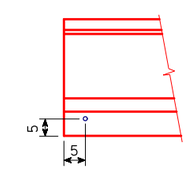

EXPANSION PIER

BEAM COIL TIE LOCATIONS

BULB TEE "E" BEAM INTERMEDIATE DIAPHRAGM STRUCTURAL STEEL

ONE BEAM CONNECTION (DETAIL "F" AND/OR DETAIL "G")		NO. OF BEAM CONNECTIONS	WEIGHT
3 - 7/8"Φ x 9 1/4" H.S. BOLTS WITH NUTS & WASHERS = 7.2 LBS.		84	605.0
ONE DETAIL "G"	2 - BENT PL 9 x 6 x 1/2 x 1'-7 = 80.8 LBS.	56	4,524.8
ONE DETAIL "F"	1 - BACKING PL 6 x 3/8 x 1'-7 = 12.1 LBS.	28	338.8
	1 - BENT PL 9 x 6 x 1/2 x 1'-7 = 40.4 LBS.	28	1,131.2
ONE DIAPHRAGM			
		NUMBER OF DIAPHRAGMS	
10 - 7/8"Φ x 2 1/4" H.S.BOLTS WITH NUTS & WASHERS = 9.7 LBS.		70	679.0
	LENGTH OF MEMBER		
1 - BENT PL 36 x 1/2 = 61.3 LBS./FT.	6'-0 9/16	70	25,947.1
INTERMEDIATE DIAPHRAGM STRUCTURAL STEEL - TOTAL (LBS.)			33,225.9

PROGRESS PLANS
6/10/2019

DESIGN FOR 0° SKEW

1097'-0 X 40'-0 PRETENSIONED PRESTRESSED CONCRETE BEAM W.B. BRIDGE

156'-0 END SPANS 157'-0 INTERIOR SPAN

INTERMEDIATE DIAPHRAGMS

IA 2 STA. 400+85.00, LT. 32.00' JUNE 2019

FREMONT COUNTY

IOWA DEPARTMENT OF TRANSPORTATION - HIGHWAY DIVISION

DESIGN SHEET NO. 22 OF 2 FILE NO. 31719 DESIGN NO. 219

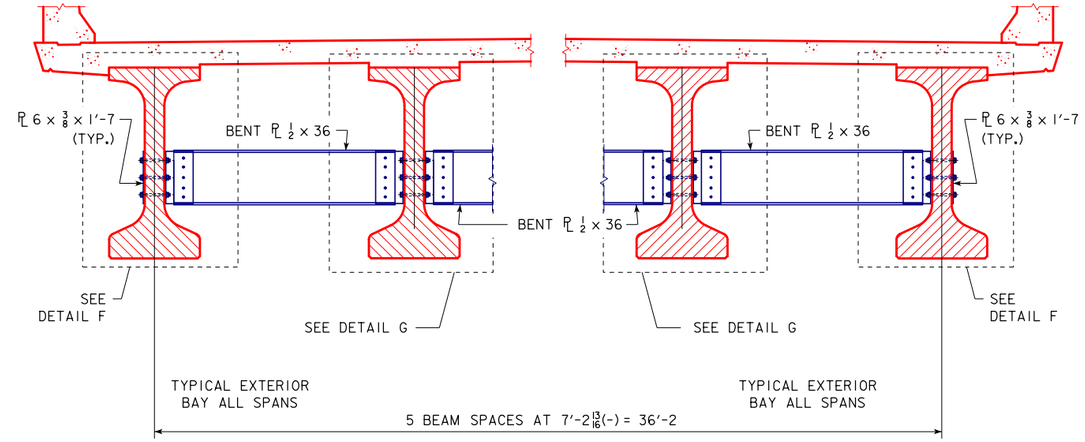

SECTION SHOWING INTERMEDIATE DIAPHRAGM

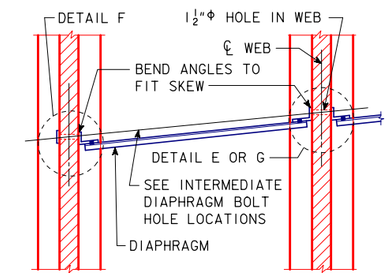

PART SECTION A-A

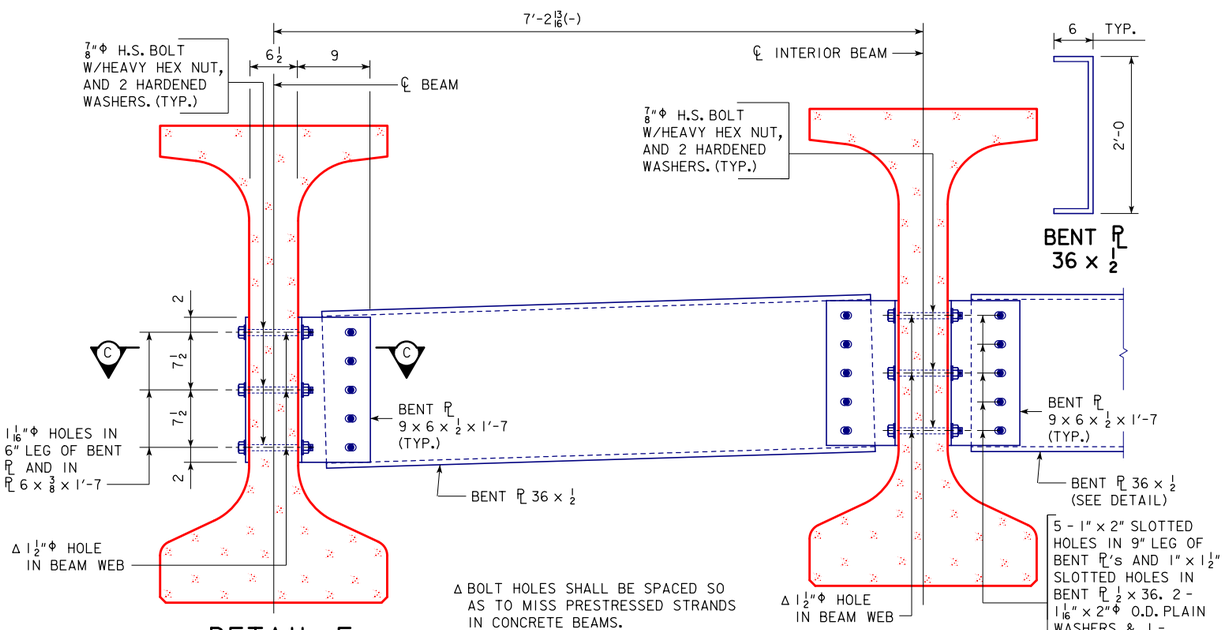

DETAIL F

DETAIL G

SECTION SHOWING INTERMEDIATE DIAPHRAGMS AT EXTERIOR BAY OVER NON-TRAVELED ROADWAY SPANS AND WATERWAYS

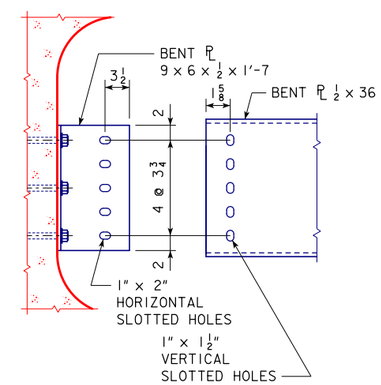

SLOTTED HOLE DETAILS

PROGRESS PLANS
6/10/2019

DESIGN FOR 0° SKEW

1097'-0 X 40'-0 PRETENSIONED PRESTRESSED CONCRETE BEAM W.B. BRIDGE

156'-0 END SPANS 157'-0 INTERIOR SPAN

INTERMEDIATE DIAPHRAGMS

IA 2 STA. 400+85.00, LT. 32.00' JUNE 2019

FREMONT COUNTY

IOWA DEPARTMENT OF TRANSPORTATION - HIGHWAY DIVISION

DESIGN SHEET NO. 23 OF ? FILE NO. 31719 DESIGN NO. 219

DESIGN TEAM Stanley Consultants Inc.	STEEL INTERM. DIAPHS. FOR "BTE" BEAM BRIDGES - SHT. 2 OF 2	STANDARD SHEET 1036-2-BTE	FREMONT COUNTY	PROJECT NUMBER NHSX-002-1(123)--3H-36	SHEET NUMBER 80

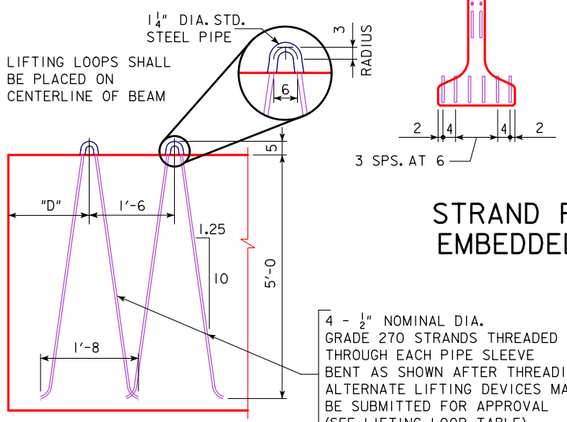

TYPICAL AT EACH END OF BEAM

LIFTING LOOP DETAIL

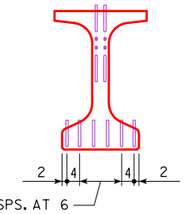

THE TOP AND BOTTOM ROWS OF THE DEFLECTED STRANDS ARE TO BE CUT WITH 1'-6 PROJECTIONS WHICH ARE TO BE SHOP BENT AS SHOWN. THE REMAINING TOP DEFLECTED STRANDS ARE TO BE CUT WITH 5" PROJECTIONS.
SIX BOTTOM STRANDS ARE TO BE CUT WITH 1'-6 PROJECTIONS WHICH ARE TO BE SHOP BENT AS SHOWN. THE REMAINING BOTTOM STRANDS ARE TO BE CUT OFF REASONABLY FLUSH WITH THE CONCRETE.

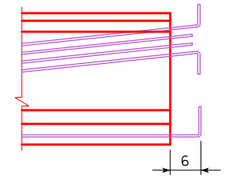

TYPICAL AT BOTH BEAM ENDS

STRAND PROJECTION AT BEAM ENDS WHEN EMBEDDED IN CONCRETE END DIAPHRAGMS

BTE BEAM DATA

	BTE BEAM	SPAN LENGTH ℄-℄ BEARING	OVERALL BEAM LENGTH (L)	CONCRETE STRENGTH f'ci (ksi)	CONCRETE STRENGTH f'c (ksi)	STRAND SIZE DIA. (in)	NO. OF STRAND STRAIGHT	NO. OF STRAND DEFLECTED	TOTAL INITIAL PRESTRESS ③ kips	HOLD DOWN FORCE-kips	CAMBER (in) AT RELEASE	CAMBER (in) AFTER LOSSES	DEFLECTION (in) Δ_D IMMEDIATE ① (ELASTIC) Δ_I STEEL DIAPHRAGM	DEFLECTION (in) Δ_D TIME ② (PLASTIC) Δ_T STEEL DIAPHRAGM	PERMISSIBLE MAXIMUM SPACING HL-93 LOADING STEEL DIAPHRAGM	WEIGHT (TONS)	CONCRETE (CU YD.)	REINFORCING STEEL (WEIGHT-LBS)
④	BTE155	155'-0	156'-4	8.00	9.00	0.60	46	12	2468	32.6	3.72	6.50	4.36	1.09	8'-0½	65.8	32.5	4318

① DEFLECTIONS AT MID-SPAN DUE TO WEIGHT OF SLAB AND DIAPHRAGM. THE DEFLECTIONS SHOWN ARE FOR A SLAB (8 in) AND HAUNCH (1.5 in) WEIGHT OF:
0.85 kips/ft FOR 8'-0 BEAM SPACING AND TWO STEEL DIAPHRAGMS (0.500 kips) PLACED 20'-0, ON EITHER SIDE, OF THE BEAM CENTERLINE. FOR DIFFERENT SLAB AND DIAPHRAGM WEIGHTS, DEFLECTIONS WILL BE DIRECTLY PROPORTIONAL.

② DEFLECTIONS DUE TO THE COMBINED EFFECT OF CREEP DUE TO WEIGHT OF SLAB AND SHRINKAGE OF SLAB.
TOTAL BEAM DEFLECTIONS AT ℄ OF SPAN, Δ_D, DUE TO WEIGHT OF SLAB AND DIAPHRAGMS FOR DETAILING PURPOSE:
(A) $\Delta_D = \Delta_I + \Delta_T$ FOR SIMPLE SPAN.
(B) $\Delta_D = \Delta_I + \frac{3}{4}\Delta_T$ FOR END SPANS OF CONTINUOUS BRIDGE.
(C) $\Delta_D = \Delta_I + \frac{1}{2}\Delta_T$ FOR INTERIOR SPANS OF CONTINUOUS BRIDGE.

③ TOTAL INITIAL PRESTRESS IS BASED ON 72.6% f's, f's. = 270 ksi. AND As = 0.217 in².

④ REQUIRES A 4000 psi, 28 DAY COMPRESSIVE STRENGTH FOR CAST-IN-PLACE SLAB CONCRETE.

CALCULATED DESIGN CAMBERS HAVE BEEN REDUCED FROM THEIR THEORETICAL VALUES BY 15% TO AID CONSTRUCTABILITY.

DESIGN STRESSES:

DESIGN STRESSES FOR THE FOLLOWING MATERIALS ARE TO BE IN ACCORDANCE WITH AASHTO LRFD BRIDGE DESIGN SPECIFICATIONS FOR HIGHWAY BRIDGES, SERIES OF 2007.
REINFORCING STEEL IN ACCORDANCE WITH SECTION 5, GRADE 60.
CONCRETE IN ACCORDANCE WITH SECTION 5.
PRESTRESSING STEEL IN ACCORDANCE WITH SECTION 5, GRADE 270.

SPECIFICATIONS:

CONSTRUCTION: STANDARD SPECIFICATIONS OF THE IOWA DEPARTMENT OF TRANSPORTATION, CURRENT SERIES, WITH CURRENT APPLICABLE SPECIAL PROVISIONS AND SUPPLEMENTAL SPECIFICATIONS.
DESIGN: A.A.S.H.T.O. LRFD, SERIES OF 2007, WITH MINOR MODIFICATIONS.

BEAM NOTES:

THIS BEAMS IS DESIGNED FOR AASHTO LIVE LOADS AS INDICATED IN ABOVE TABLE WITH AN ALLOWANCE OF 20 LBS PER SQUARE FOOT OF ROADWAY FOR FUTURE WEARING SURFACE.
ALL PPC BEAMS SHALL USE HIGH PERFORMANCE CONCRETE (HPC) IN ACCORDANCE WITH THE STANDARD SPECIFICATIONS.
HOLD DOWN POINTS FOR DEFLECTED STRANDS MAY BE MOVED TOWARD ENDS OF BEAM A DISTANCE OF 0.05 L MAXIMUM AT PRODUCER'S OPTION.
ALL PRESTRESSING STRANDS EXCEPT LIFTING LOOP STRANDS SHALL BE 0.60 in. NOMINAL DIAMETER (NOMINAL STEEL AREA = 0.217 in²) AND CONFORM TO ASTM A416 GRADE 270 LOW RELAXATION STRANDS. MINIMUM STRAND BREAKING STRENGTH SHALL BE 58.6 kips.
TOPS OF BEAMS ARE TO BE STRUCK OFF LEVEL AND FINISHED AS PER MATERIALS IM570.
BEARINGS SHALL BE AS DETAILED ON OTHER DESIGN SHEETS.
BEAMS TO BE USED IN BRIDGES MADE CONTINUOUS BY THE POURED IN PLACE FLOOR, ARE TO BE AT LEAST 28 DAYS OLD BEFORE THE FLOOR IS PLACED UNLESS A SHORTER CURING TIME IS APPROVED BY THE BRIDGE ENGINEER.
THE PORTIONS OF THE PRESTRESSED BEAMS THAT ARE TO BE EMBEDDED IN THE ABUTMENT AND PIER DIAPHRAGMS SHALL BE ROUGHENED FOR A DISTANCE OF 10" FROM THE BEAM END BY SANDBLASTING OR OTHER APPROVED METHODS TO PROVIDE SUITABLE BOND BETWEEN THE BEAM AND THE DIAPHRAGM IN ACCORDANCE WITH ARTICLE 2403.03, 1, OF THE STANDARD SPECIFICATIONS.
ALL BEAMS ARE TO BE INCREASED IN LENGTH TO COMPENSATE FOR ELASTIC SHORTENING, CREEP AND SHRINKAGE.
FOR TRANSPORTING, THE ALLOWABLE OVERHANG IS SHOWN IN THE LIFTING LOOP AND OVERHANG TABLE.
THE CONTRACTOR SHALL ASSURE THE LATERAL STABILITY OF THE BEAMS DURING HANDLING, TRANSPORTING AND ERECTION BY PROVIDING TEMPORARY BRACING AS NEEDED.
HOLES MUST BE CAST IN THE WEB TO ACCOMMODATE THE STEEL DIAPHRAGM ATTACHMENTS AS DETAILED ON THE STEEL DIAPHRAGM DETAIL SHEET.
IF SOLE PLATE IS REQUIRED FOR BEARING, SOLE PLATE IS TO BE SET IN FORMS WHEN BEAM IS CAST AND FORMED OUT BELOW TO EXCLUDE CONCRETE AS DETAILED ON THE BEARING SHEET.
IF STUB ABUTMENTS ARE USED, ALL STRANDS AT THE ENDS OF BEAMS AT STUB ABUTMENTS SHALL BE CUT OFF REASONABLY FLUSH WITH THE CONCRETE.
WHEN EXPANSION JOINTS ARE USED, CONCRETE SEALER SHALL BE APPLIED TO THE PRESTRESSED BEAM END SECTIONS. THE SEALING SHALL BE IN ACCORDANCE WITH MATERIALS I.M. 570 (FABRICATOR APPLICATION) AND I.M. 491.12 (CONTRACTOR APPLICATION).
MINIMUM CONCRETE f'c (AT 28 DAYS) AND MINIMUM f'ci AT RELEASE ARE LOCATED IN THE BTE BEAM DATA TABLE ABOVE.
FOUR 0.60 IN. DIAMETER STRANDS STRESSED TO NOT MORE THAN 5000 lbs. EACH MAY BE USED IN LIEU OF BARS 5a1 AND 5a2 IN THE TOP FLANGE.

LIFTING LOOP AND OVERHANG TABLE

BEAMS	LIFTING LOOPS EACH END	# OF STRANDS PER LOOP	D	BEAM OVERHANG (FT)
BTE155	2	4	13'-6	16

LIFTING LOOPS SHALL CARRY LOADS EQUALLY.

NUMBER AND EXACT LOCATION OF COIL TIES TO BE AS DETAILED ON SPECIFIC BRIDGE DESIGN.

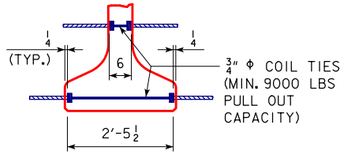

COIL TIE DETAIL

ALTERNATE BAR NOTES:

ALTERNATE BARS SHOWN IN BENT BAR DETAILS MAY BE USED IN LIEU OF REINFORCING BARS SHOWN IN BAR LIST. NO ADDITIONAL PAYMENT SHALL BE MADE FOR USE OF ALTERNATE BARS.

ΔΔ 5b1 AND 6b3 BARS TO BE EPOXY COATED
* 6b3 AND 6b4 BARS TO BE USED IN PAIRS

NOTE:
MODIFIED STIRRUP EXTENSIONS FOR 6b3 BARS

REINFORCING BAR LIST

	BAR	SHAPE	NO.	LENGTH
BEAM			BTE155	
	5a1		12	22'-6
	5a2		18	40'-0
ΔΔ	5b1		119	12'-2
ΔΔ *	6b3		52	6'-7
*	6b4		20	5'-10
	4c1		189	2'-7
	4d1		151	6'-5
	4e1		36	3'-2
	4h1		8	8'-0

BENT BAR DETAILS

NOTE: ALL BAR DIMENSIONS ARE OUT TO OUT
D = PIN DIAMETER FOR BENDING (UNLESS OTHERWISE SHOWN)
#4 BAR D= 2"
#5 BAR D= 2½"
#6 BAR D= 4½"

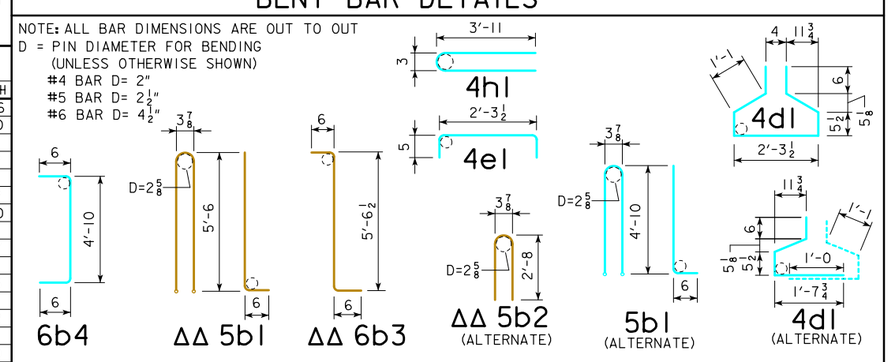

PROGRESS PLANS
6/10/2019

DESIGN FOR 0° SKEW
1097'-0 X 40'-0 PRETENSIONED PRESTRESSED CONCRETE BEAM W.B. BRIDGE
156'-0 END SPANS 157'-0 INTERIOR SPAN
BTE155 BEAM DETAILS
IA 2 STA. 400+85.00, LT. 32.00' JUNE 2019
FREMONT COUNTY
IOWA DEPARTMENT OF TRANSPORTATION - HIGHWAY DIVISION
DESIGN SHEET NO. 24 OF ? FILE NO. 31719 DESIGN NO. 219

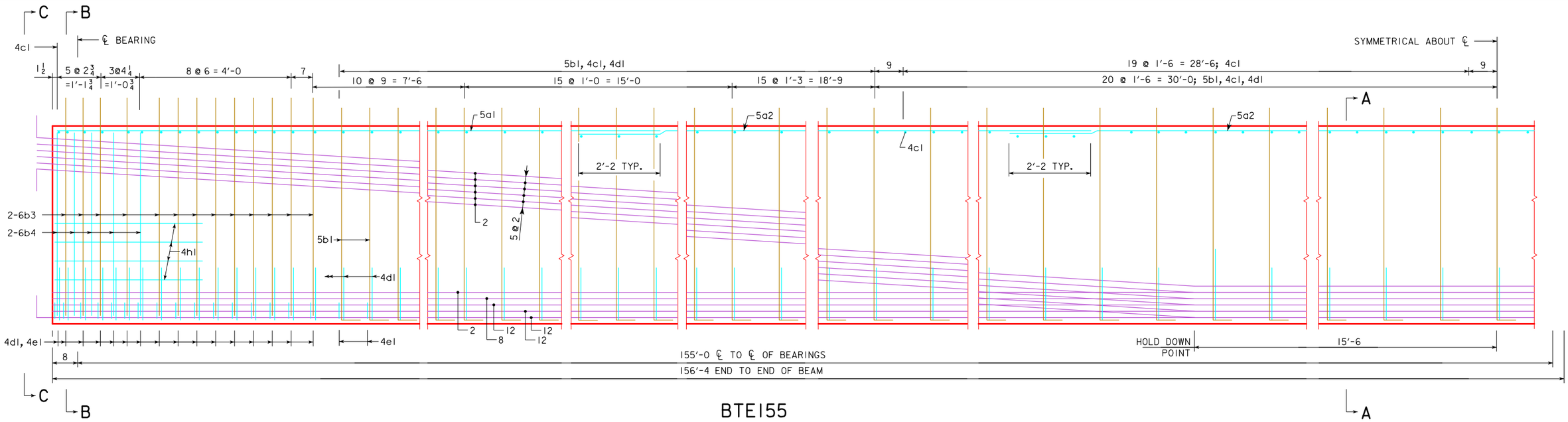

BTE155

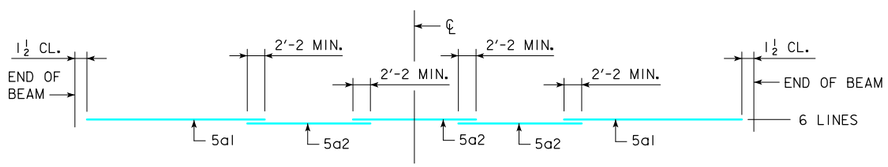

TOP FLANGE LONGITUDINAL BAR LAYOUT

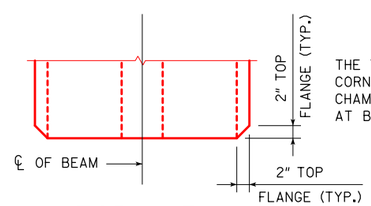

THE TOP FLANGE BEAM CORNERS ARE TO BE CHAMFERED 2" AS SHOWN AT BOTH ENDS OF THE BEAM.

TOP VIEW

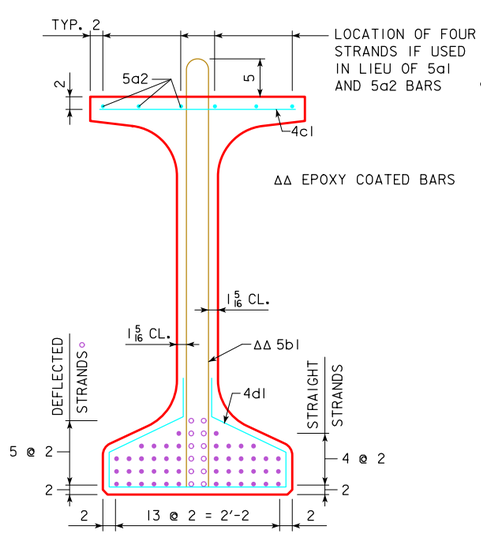

SECTION A-A

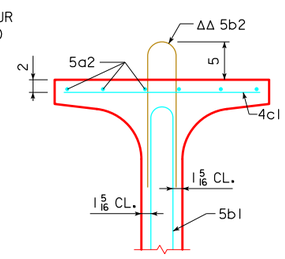

SECTION A-A (ALTERNATE)

SEE ALTERNATE BAR NOTE ON STANDARD SHEET 4790 (SHEET 1).

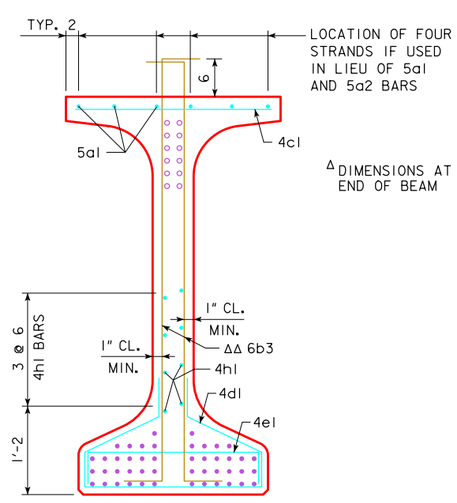

SECTION B-B

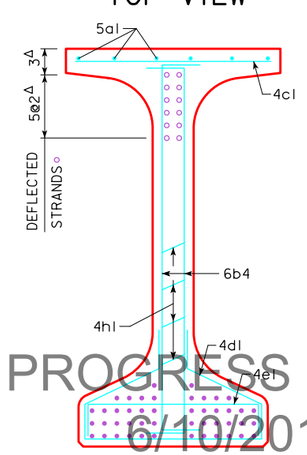

SECTION C-C

AREA = 807.4 in²
$\bar{y}_b$ = 28.75 in
I = 422,790 in⁴

BEAM SECTION PROPERTIES

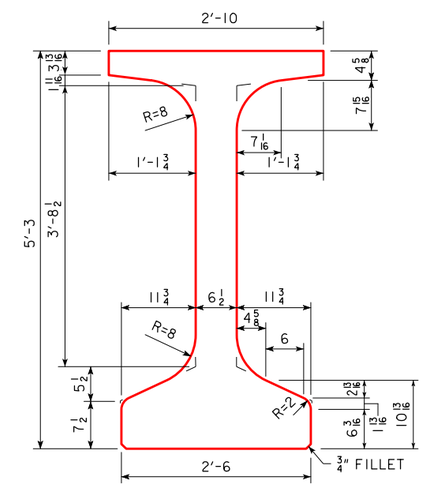

BTE BEAM CROSS SECTION

PROGRESS PLANS
6/10/2019

DESIGN FOR 0° SKEW

1097'-0 X 40'-0 PRETENSIONED PRESTRESSED CONCRETE BEAM E.B. BRIDGE

156'-0 END SPANS 157'-0 INTERIOR SPAN

BTE155 BEAM DETAILS

IA 2 STA. 400+85.00, RT. 32.00' JUNE 2019

FREMONT COUNTY

IOWA DEPARTMENT OF TRANSPORTATION - HIGHWAY DIVISION

DESIGN SHEET NO. 25 OF ? FILE NO. 31719 DESIGN NO. 119

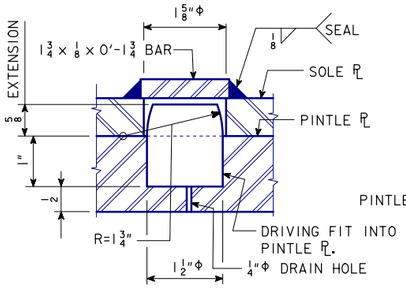

PINTLE DETAIL

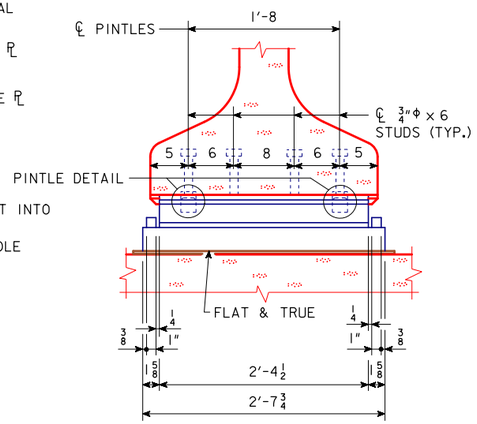

SECTION A-A

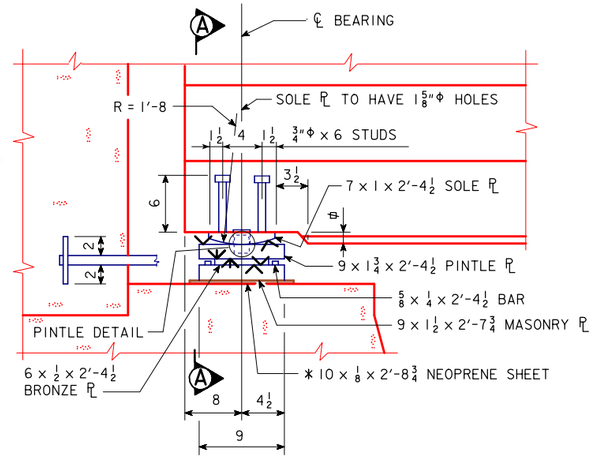

PART ELEVATION

Φ NOTCH BEAM END TO SOLE PL THICKNESS MAXIMUM 1"

ABUTMENT BEARING NOTES:

THE SLIDING SURFACE OF THE BRONZE PL SHALL BE LUBRICATED IN ACCORDANCE WITH ARTICLE 4190.03, OF THE STANDARD SPECIFICATIONS, AND THE BRONZE METAL SHALL BE CAST BRONZE IN ACCORDANCE WITH ARTICLE 4190.03, OF THE STANDARD SPECIFICATIONS. TOP EDGES OF BRONZE PL SHALL BE BEVELED 1/8".

SURFACES MARKED "V" SHALL BE FINISHED ANSI 250 AND SURFACES MARKED "⋁" SHALL BE FINISHED ANSI 125.

MASONRY PLATES ARE TO BE SET ON A 1/8" NEOPRENE SHEET.

PINTLE PLATES, MASONRY PLATES, AND LUBRICATED BRONZE PLATES ARE A PART OF THE SUPERSTRUCTURE STRUCTURAL STEEL QUANTITY. UNIT PRICE BID FOR STRUCTURAL STEEL SHALL INCLUDE ALLOWANCE FOR COST OF BRONZE PLATES. COST OF NEOPRENE SHEETS SHALL BE CONSIDERED INCIDENTAL TO THE STRUCTURAL STEEL BID ITEM. COST OF THE ANCHORED CURVED SOLE PLATES IS TO BE INCLUDED IN THE PRICE BID FOR PRETENSIONED PRESTRESSED CONCRETE BEAMS.

THE SOLE PLATE, PINTLE PLATE AND THE MASONRY PLATE SHALL BE GALVANIZED. THE SOLE PLATE AND MASONRY PLATE SHALL BE FITTED UP AND WELDED PRIOR TO GALVANIZING. THE SURFACE OF PINTLE PLATE IN CONTACT WITH BRONZE BEARING PLATE SHALL BE SMOOTH AND FREE OF PROJECTIONS DUE TO GALVANIZING.

SOLE PLATES ARE TO BE SET IN FORMS WHEN BEAMS ARE CAST AND THE BOTTOM OF BEAMS FORMED OUT AS SHOWN TO EXCLUDE CONCRETE.

SOLE PLATES SHALL COMPLY WITH ONE OF THE FOLLOWING SPECIFICATIONS :

ASTM A514 GRADE B
ASTM A709 GRADE HPS 70W

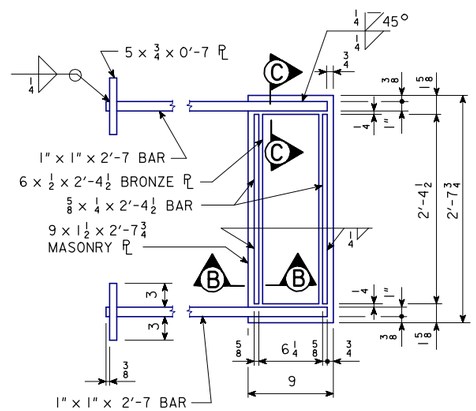

PLAN OF MASONRY PL AND BRONZE PL

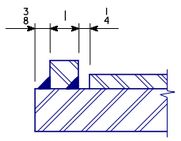

SECTION C-C

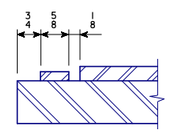

SECTION B-B

DESIGN NOTE:

1. TOTAL VERTICAL DESIGN LOAD (DC + DW + LL + IM) AT SERVICE LIMIT STATE = 300 k
2. BEARINGS AS DESIGNED WILL ALLOW UP TO 1.5 INCHES OF MOVEMENT EACH WAY OF CENTERLINE OF BEARING.

PRETENSIONED PRESTRESSED CONCRETE BEAM ABUTMENT BEARING DETAILS
(BTB, BTC, BTD & BTE BEAMS)

* THE 1/8 INCH NEOPRENE SHEETS ARE TO BE 50, 60, OR 70 DUROMETER HARDNESS AND SHALL BE 1 INCH GREATER IN LENGTH AND WIDTH THAN THE BOTTOM SURFACE OF THE MASONRY PLATES OR STEEL BEARINGS.

MASONRY PL / BRONZE BEARING ASSEMBLY

PROGRESS PLANS
6/10/2019

STRUCTURAL STEEL	
WEIGHT	LBS.

DOES NOT INCLUDE CURVED SOLE PL

NOTE: STRUCTURAL STEEL WEIGHT IS INCLUDED ON THE SUMMARY QUANTITIES SHEET.

DESIGN FOR 0° SKEW

1097'-0 X 40'-0 PRETENSIONED PRESTRESSED CONCRETE BEAM W.B. BRIDGE

156'-0 END SPANS 157'-0 INTERIOR SPAN

ABUTMENT BEARING DETAILS

IA 2 STA. 400+85.00, LT. 32.00' JUNE 2019

FREMONT COUNTY

IOWA DEPARTMENT OF TRANSPORTATION - HIGHWAY DIVISION

DESIGN SHEET NO. 26 OF ? FILE NO. 31719 DESIGN NO. 219

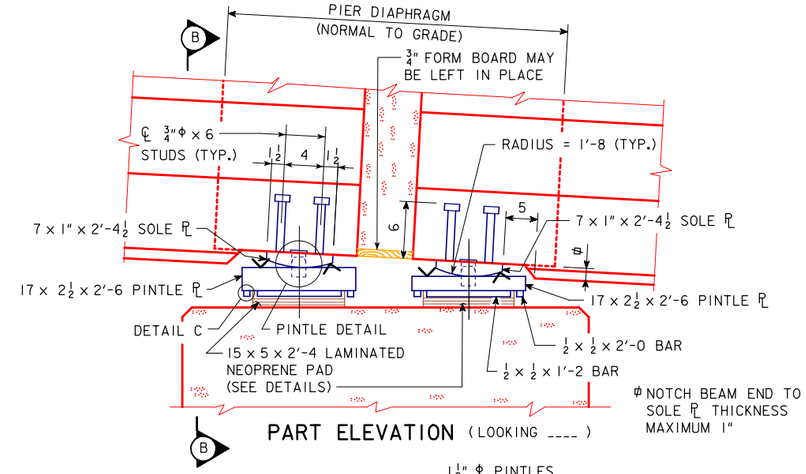

PART ELEVATION (LOOKING ____)

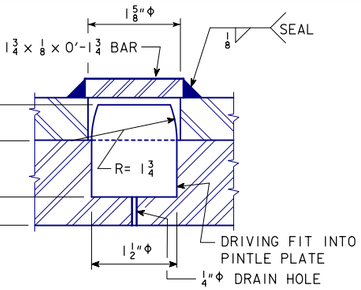

PINTLE DETAIL

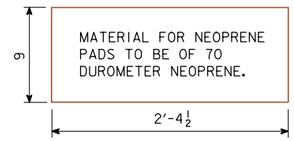

PLAIN NEOPRENE PAD

NOTE:
COST OF NEOPRENE PADS SHALL BE INCLUDED IN THE PRICE BID FOR "PRETENSIONED PRESTRESSED CONCRETE BEAMS".

FIXED PIER

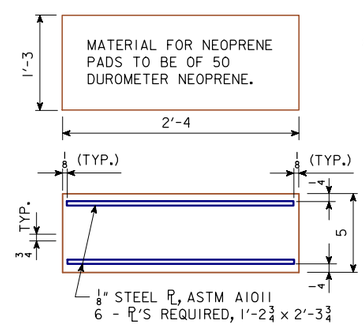

LAMINATED NEOPRENE PAD

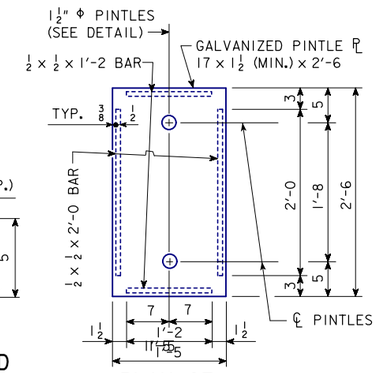

PLAN OF PINTLE PLATE

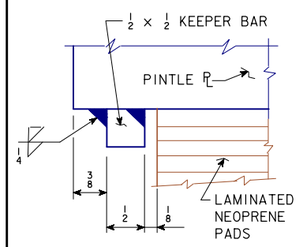

DETAIL C

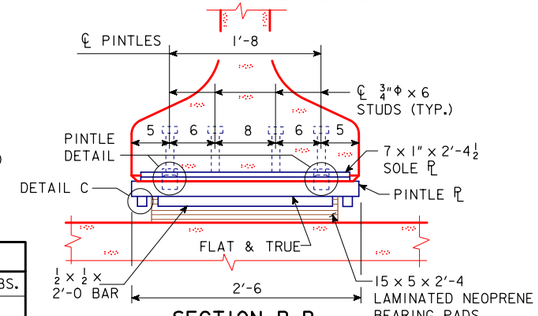

SECTION B-B
(DIAPHRAGM CONCRETE NOT SHOWN)

STRUCTURAL STEEL	
WEIGHT	17,612.8 LBS.

DOES NOT INCLUDE CURVED SOLE PL

* THE 1/8 INCH NEOPRENE SHEETS ARE TO BE 50, 60, OR 70 DUROMETER HARDNESS AND SHALL BE 1 INCH GREATER IN LENGTH THAN THE BOTTOM SURFACE OF THE MASONRY PLATES OR STEEL BEARINGS.

NOTE: STRUCTURAL STEEL WEIGHT IS INCLUDED ON THE SUMMARY QUANTITIES SHEET.

EXPANSION PIER BEARING NOTES:

SURFACES MARKED "V" SHALL BE FINISHED ANSI 250.

PINTLE PLATES ARE A PART OF THE SUPERSTRUCTURE STRUCTURAL STEEL QUANTITY.

COST OF ANCHORED CURVED SOLE PLATES IS TO BE INCLUDED IN THE PRICE BID FOR PRETENSIONED PRESTRESSED CONCRETE BEAMS. COST FOR NEOPRENE PADS SHALL BE CONSIDERED INCIDENTAL TO THE PRETENSIONED PRESTRESSED CONCRETE BEAM BID ITEM.

THE SOLE PLATES AND PINTLE PLATES SHALL BE GALVANIZED. ALL WELDING SHALL BE COMPLETED PRIOR TO GALVANIZING. THE SURFACE OF THE PINTLE PLATE IN CONTACT WITH THE LAMINATED NEOPRENE PADS SHALL BE FREE OF PROJECTIONS DUE TO THE GALVANIZING.

SOLE PLATES ARE TO BE SET IN FORMS WHEN BEAMS ARE CAST AND THE BOTTOM OF BEAMS FORMED OUT AS SHOWN TO EXCLUDE CONCRETE.

SOLE PLATES SHALL COMPLY WITH ONE OF THE FOLLOWING :

ASTM A514 GRADE B

ASTM A709 GRADE HPS 70W

EXPANSION PIER

LAMINATED NEOPRENE PAD / CURVED SOLE PL ASSEMBLY

PRELIMINARY PLANS
6/10/2019

DESIGN FOR 0° SKEW

1097'-0 X 40'-0 PRETENSIONED PRESTRESSED CONCRETE BEAM W.B. BRIDGE

156'-0 END SPANS 157'-0 INTERIOR SPAN

PIER BEARING DETAILS

IA 2 STA. 400+85.00, LT. 32.00' JUNE 2019

FREMONT COUNTY

IOWA DEPARTMENT OF TRANSPORTATION - HIGHWAY DIVISION

DESIGN SHEET NO. 27 OF ? FILE NO. 31719 DESIGN NO. 219

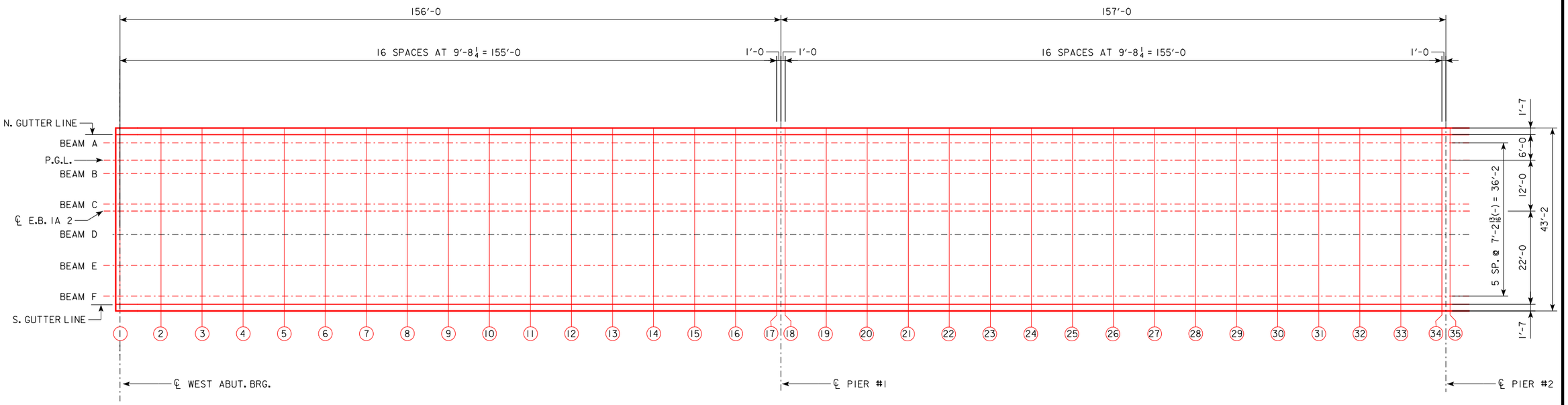

TOP OF SLAB PLAN (SPAN 1 & SPAN 2)

TOP OF SLAB ELEVATIONS

	℄ WEST ABUT.BRG.																℄ PIER #1 BEARING										
LOCATION	1	2	3	4	5	6	7	8	9	10	11	12	13	14	15	16	17	18	19	20	21	22	23	24	25	26	27
NORTH GUTTER LINE	945.21	945.25	945.30	945.35	945.40	945.45	945.50	945.54	945.59	945.64	945.69	945.74	945.79	945.83	945.88	945.93	945.98	945.99	946.04	946.09	946.14	946.18	946.23	946.28	946.33	946.38	946.43
BEAM A	945.24	945.29	945.34	945.39	945.44	945.49	945.53	945.58	945.63	945.68	945.73	945.78	945.82	945.87	945.92	945.97	946.02	946.03	946.08	946.13	946.17	946.22	946.27	946.32	946.37	946.42	946.46
BEAM B	945.39	945.44	945.48	945.53	945.58	945.63	945.68	945.73	945.78	945.82	945.87	945.92	945.97	946.02	946.07	946.11	946.16	946.17	946.22	946.27	946.32	946.37	946.42	946.46	946.51	946.56	946.61
BEAM C	945.53	945.57	945.62	945.67	945.72	945.77	945.82	945.86	945.91	945.96	946.01	946.06	946.11	946.16	946.20	946.25	946.30	946.31	946.36	946.41	946.46	946.50	946.55	946.60	946.65	946.70	946.75
℄ W.B. IA 2	945.54	945.58	945.63	945.68	945.73	945.78	945.83	945.88	945.92	945.97	946.02	946.07	946.12	946.17	946.21	946.26	946.31	946.32	946.37	946.42	946.47	946.52	946.56	946.61	946.66	946.71	946.76
BEAM D	945.45	945.50	945.55	945.60	945.65	945.69	945.74	945.79	945.84	945.89	945.94	945.99	946.03	946.08	946.13	946.18	946.23	946.24	946.29	946.33	946.38	946.43	946.48	946.53	946.58	946.63	946.67
BEAM E	945.31	945.36	945.40	945.45	945.50	945.55	945.60	945.65	945.70	945.74	945.79	945.84	945.89	945.94	945.99	946.03	946.08	946.09	946.14	946.19	946.24	946.29	946.34	946.38	946.43	946.48	946.53
BEAM F	945.16	945.21	945.26	945.31	945.36	945.41	945.45	945.50	945.55	945.60	945.65	945.70	945.74	945.79	945.84	945.89	945.94	945.95	946.00	946.05	946.09	946.14	946.19	946.24	946.29	946.34	946.38
SOUTH GUTTER LINE	945.12	945.17	945.22	945.27	945.32	945.37	945.42	945.46	945.51	945.56	945.61	945.66	945.71	945.75	945.80	945.85	945.90	945.91	945.96	946.01	946.06	946.10	946.15	946.20	946.25	946.30	946.35

TOP OF SLAB ELEVATIONS

							℄ PIER #2 BEARING
LOCATION	28	29	30	31	32	33	34
NORTH GUTTER LINE	946.47	946.52	946.57	946.62	946.67	946.72	946.77
BEAM A	946.51	946.56	946.61	946.66	946.71	946.75	946.80
BEAM B	946.66	946.71	946.75	946.80	946.85	946.90	946.95
BEAM C	946.80	946.84	946.89	946.94	946.99	947.04	947.09
℄ W.B. IA 2	946.81	946.85	946.90	946.95	947.00	947.05	947.10
BEAM D	946.72	946.77	946.82	946.87	946.92	946.96	947.01
BEAM E	946.58	946.63	946.67	946.72	946.77	946.82	946.87
BEAM F	946.43	946.48	946.53	946.58	946.63	946.67	946.72
SOUTH GUTTER LINE	946.39	946.44	946.49	946.54	946.59	946.64	946.68

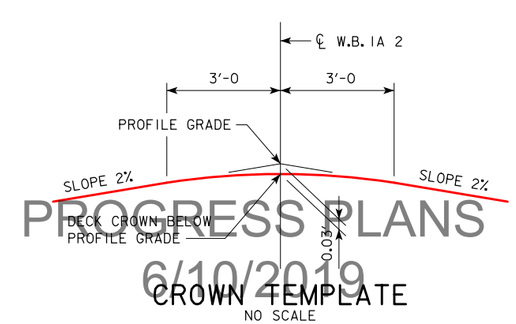

CROWN TEMPLATE
NO SCALE

PROGRESS PLANS
6/10/2019

DESIGN FOR 0° SKEW

1097'-0 X 40'-0 PRETENSIONED PRESTRESSED CONCRETE BEAM W.B. BRIDGE

156'-0 END SPANS 157'-0 INTERIOR SPAN

TOP OF SLAB ELEVATIONS

IA 2 STA. 400+85.00, LT. 32.00' JUNE 2019

FREMONT COUNTY

IOWA DEPARTMENT OF TRANSPORTATION - HIGHWAY DIVISION

DESIGN SHEET NO. 28 OF ? FILE NO. 31719 DESIGN NO. 219

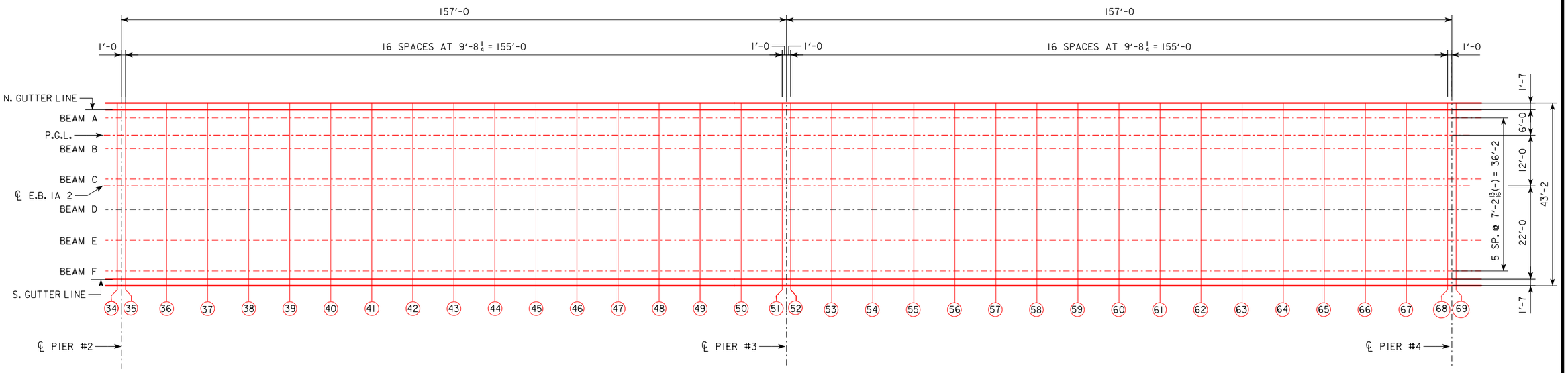

TOP OF SLAB PLAN (SPAN 3 & SPAN 4)

TOP OF SLAB ELEVATIONS

	℄ PIER #2 BEARING																℄ PIER #3 BEARING										
LOCATION	35	36	37	38	39	40	41	42	43	44	45	46	47	48	49	50	51	52	53	54	55	56	57	58	59	60	61
NORTH GUTTER LINE	946.78	946.82	946.87	946.92	946.97	947.02	947.07	947.11	947.16	947.21	947.26	947.31	947.36	947.40	947.45	947.50	947.55	947.56	947.61	947.65	947.70	947.74	947.78	947.81	947.85	947.88	947.91
BEAM A	946.81	946.86	946.91	946.96	947.01	947.06	947.10	947.15	947.20	947.25	947.30	947.35	947.39	947.44	947.49	947.54	947.59	947.60	947.65	947.69	947.74	947.78	947.82	947.85	947.89	947.92	947.95
BEAM B	946.96	947.01	947.05	947.10	947.15	947.20	947.25	947.30	947.35	947.39	947.44	947.49	947.54	947.59	947.64	947.68	947.73	947.74	947.79	947.84	947.88	947.92	947.96	948.00	948.03	948.06	948.09
BEAM C	947.10	947.14	947.19	947.24	947.29	947.34	947.39	947.43	947.48	947.53	947.58	947.63	947.68	947.73	947.77	947.82	947.87	947.88	947.93	947.97	948.02	948.06	948.10	948.13	948.17	948.20	948.23
℄ W.B. IA 2	947.11	947.15	947.20	947.25	947.30	947.35	947.40	947.45	947.49	947.54	947.59	947.64	947.69	947.74	947.78	947.83	947.88	947.89	947.94	947.99	948.03	948.07	948.11	948.15	948.18	948.21	948.24
BEAM D	947.02	947.07	947.12	947.17	947.22	947.26	947.31	947.36	947.41	947.46	947.51	947.56	947.60	947.65	947.70	947.75	947.80	947.81	947.86	947.90	947.95	947.99	948.03	948.06	948.10	948.13	948.16
BEAM E	946.88	946.93	946.97	947.02	947.07	947.12	947.17	947.22	947.27	947.31	947.36	947.41	947.46	947.51	947.56	947.60	947.65	947.66	947.71	947.76	947.80	947.84	947.88	947.92	947.95	947.98	948.01
BEAM F	946.73	946.78	946.83	946.88	946.93	946.98	947.02	947.07	947.12	947.17	947.22	947.27	947.31	947.36	947.41	947.46	947.51	947.52	947.57	947.61	947.66	947.70	947.74	947.77	947.81	947.84	947.87
SOUTH GUTTER LINE	946.69	946.74	946.79	946.84	946.89	946.94	946.99	947.03	947.08	947.13	947.18	947.23	947.28	947.32	947.37	947.42	947.47	947.48	947.53	947.57	947.62	947.66	947.70	947.73	947.77	947.80	947.83

TOP OF SLAB ELEVATIONS

							℄ PIER #4 BEARING
LOCATION	62	63	64	65	66	67	68
NORTH GUTTER LINE	947.94	947.96	947.98	948.00	948.02	948.04	948.05
BEAM A	947.97	948.00	948.02	948.04	948.06	948.08	948.09
BEAM B	948.12	948.14	948.17	948.19	948.20	948.22	948.23
BEAM C	948.26	948.28	948.30	948.32	948.34	948.36	948.37
℄ E.B. IA 2	948.27	948.29	948.31	948.34	948.35	948.37	948.38
BEAM D	948.18	948.21	948.23	948.25	948.27	948.28	948.30
BEAM E	948.04	948.06	948.09	948.11	948.12	948.14	948.15
BEAM F	947.89	947.92	947.94	947.96	947.98	948.00	948.01
SOUTH GUTTER LINE	947.86	947.88	947.90	947.92	947.94	947.96	947.97

PROGRESS PLANS
6/10/2019

DESIGN FOR 0° SKEW

1097'-0 X 40'-0 PRETENSIONED
PRESTRESSED CONCRETE BEAM W.B. BRIDGE

156'-0 END SPANS 157'-0 INTERIOR SPAN

TOP OF SLAB ELEVATIONS

IA 2 STA. 400+85.00, LT. 32.00' JUNE 2019

FREMONT COUNTY

IOWA DEPARTMENT OF TRANSPORTATION - HIGHWAY DIVISION

DESIGN SHEET NO. 29 OF 2 FILE NO. 31719 DESIGN NO. 219

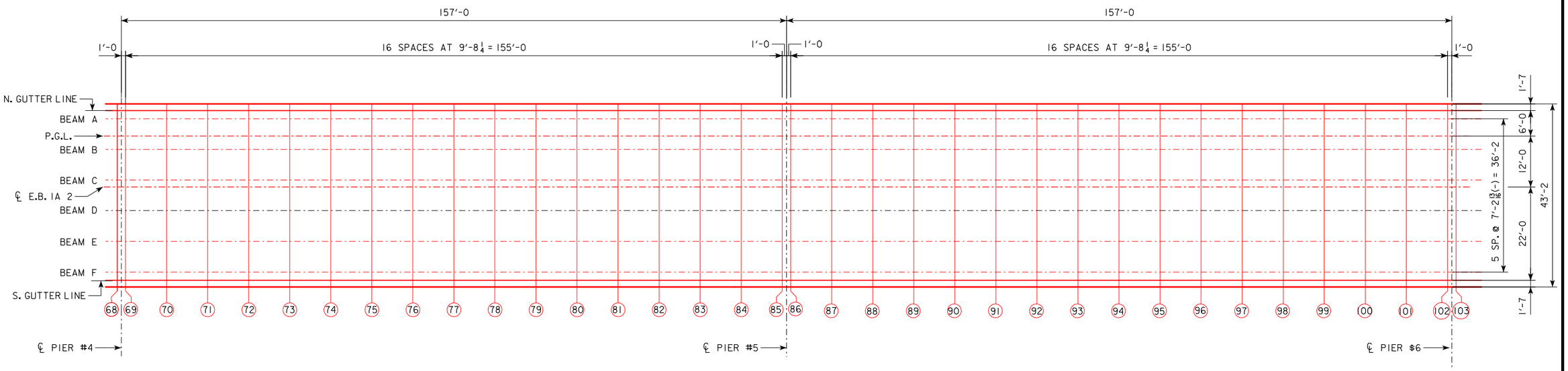

TOP OF SLAB PLAN (SPAN 5 & SPAN 6)

TOP OF SLAB ELEVATIONS

	℄ PIER #4 BEARING																℄ PIER #5 BEARING										
LOCATION	69	70	71	72	73	74	75	76	77	78	79	80	81	82	83	84	85	86	87	88	89	90	91	92	93	94	95
NORTH GUTTER LINE	948.05	948.06	948.07	948.08	948.08	948.08	948.08	948.07	948.07	948.06	948.05	948.04	948.02	948.00	947.98	947.96	947.93	947.93	947.90	947.87	947.84	947.80	947.77	947.73	947.68	947.64	947.59
BEAM A	948.09	948.10	948.11	948.11	948.12	948.12	948.12	948.11	948.11	948.10	948.09	948.07	948.06	948.04	948.02	948.00	947.97	947.97	947.94	947.91	947.88	947.84	947.80	947.77	947.72	947.68	947.63
BEAM B	948.24	948.25	948.25	948.26	948.26	948.26	948.26	948.26	948.25	948.24	948.23	948.22	948.20	948.19	948.16	948.14	948.12	948.11	948.08	948.05	948.02	947.99	947.95	947.91	947.87	947.82	947.78
BEAM C	948.37	948.38	948.39	948.40	948.40	948.40	948.40	948.40	948.39	948.38	948.37	948.36	948.34	948.32	948.30	948.28	948.26	948.25	948.22	948.19	948.16	948.12	948.09	948.05	948.01	947.96	947.91
℄ E.B. IA 2	948.38	948.39	948.40	948.41	948.41	948.41	948.41	948.41	948.40	948.39	948.38	948.37	948.35	948.33	948.31	948.29	948.27	948.26	948.23	948.20	948.17	948.13	948.10	948.06	948.02	947.97	947.93
BEAM D	948.30	948.31	948.32	948.32	948.33	948.33	948.33	948.32	948.32	948.31	948.30	948.28	948.27	948.25	948.23	948.21	948.18	948.18	948.15	948.12	948.09	948.05	948.01	947.97	947.93	947.89	947.84
BEAM E	948.16	948.17	948.17	948.18	948.18	948.18	948.18	948.18	948.17	948.16	948.15	948.14	948.12	948.11	948.08	948.06	948.04	948.03	948.00	947.97	947.94	947.91	947.87	947.83	947.79	947.74	947.70
BEAM F	948.01	948.02	948.03	948.03	948.04	948.04	948.04	948.03	948.03	948.02	948.01	947.99	947.98	947.96	947.94	947.92	947.89	947.89	947.86	947.83	947.80	947.76	947.72	947.68	947.64	947.60	947.55
SOUTH GUTTER LINE	947.97	947.98	947.99	948.00	948.00	948.00	948.00	947.99	947.99	947.98	947.97	947.96	947.94	947.92	947.90	947.88	947.85	947.85	947.82	947.79	947.76	947.72	947.69	947.65	947.60	947.56	947.51

TOP OF SLAB ELEVATIONS

							℄ PIER #6 BEARING
LOCATION	96	97	98	99	100	101	102
NORTH GUTTER LINE	947.55	947.49	947.44	947.38	947.33	947.27	947.20
BEAM A	947.58	947.53	947.48	947.42	947.36	947.30	947.24
BEAM B	947.73	947.68	947.62	947.57	947.51	947.45	947.39
BEAM C	947.87	947.81	947.76	947.71	947.65	947.59	947.52
℄ E.B. IA 2	947.88	947.83	947.77	947.72	947.66	947.60	947.53
BEAM D	947.79	947.74	947.69	947.63	947.57	947.51	947.45
BEAM E	947.65	947.60	947.54	947.49	947.43	947.37	947.31
BEAM F	947.50	947.45	947.40	947.34	947.28	947.22	947.16
SOUTH GUTTER LINE	947.46	947.41	947.36	947.30	947.25	947.19	947.12

PROGRESS PLANS
6/10/2019

DESIGN FOR 0° SKEW

1097'-0 X 40'-0 PRETENSIONED
PRESTRESSED CONCRETE BEAM W.B. BRIDGE

156'-0 END SPANS 157'-0 INTERIOR SPAN

TOP OF SLAB ELEVATIONS

IA 2 STA. 400+85.00, LT. 32.00' JUNE 2019

FREMONT COUNTY

IOWA DEPARTMENT OF TRANSPORTATION - HIGHWAY DIVISION

DESIGN SHEET NO. 30 OF ? FILE NO. 31719 DESIGN NO. 219

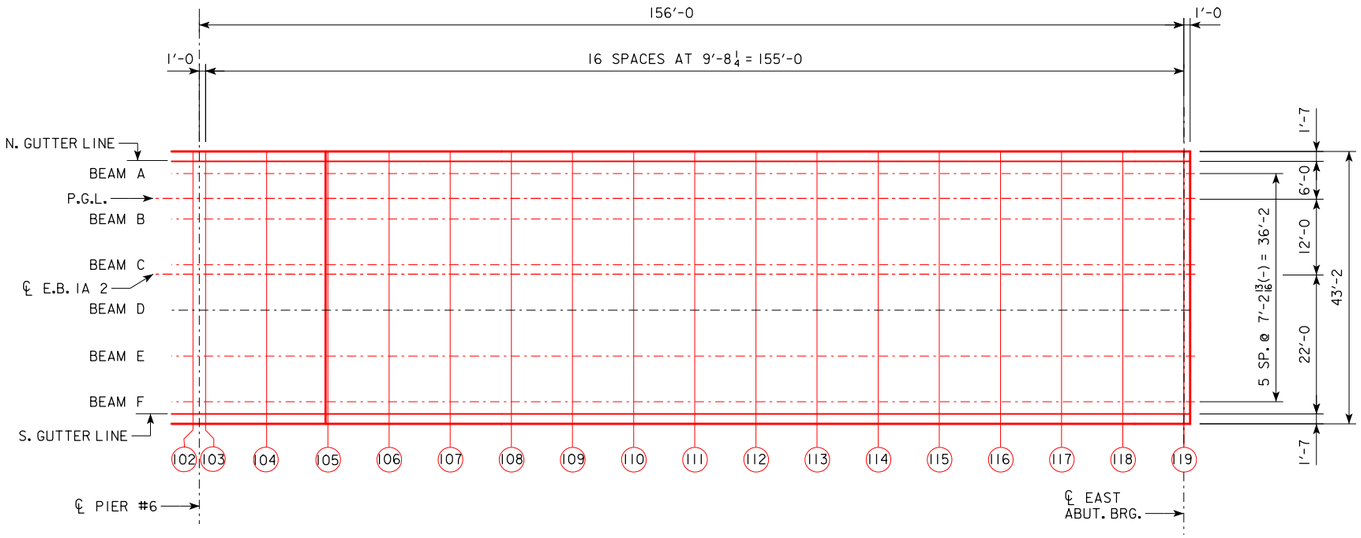

TOP OF SLAB PLAN (SPAN 7)

TOP OF SLAB ELEVATIONS

	℄ PIER #6 BEARING																℄ EAST ABUT. BRG.
LOCATION	103	104	105	106	107	108	109	110	111	112	113	114	115	116	117	118	119
NORTH GUTTER LINE	947.19	947.12	947.05	946.98	946.91	946.84	946.76	946.68	946.60	946.51	946.42	946.34	946.24	946.15	946.05	945.95	945.85
BEAM A	947.23	947.16	947.09	947.02	946.95	946.87	946.80	946.72	946.63	946.55	946.46	946.37	946.28	946.19	946.09	945.99	945.89
BEAM B	947.37	947.31	947.24	947.17	947.09	947.02	946.94	946.86	946.78	946.69	946.61	946.52	946.43	946.33	946.24	946.14	946.04
BEAM C	947.51	947.44	947.38	947.31	947.23	947.16	947.08	947.00	946.92	946.83	946.75	946.66	946.56	946.47	946.37	946.28	946.17
℄ E.B. IA 2	947.52	947.45	947.39	947.32	947.24	947.17	947.09	947.01	946.93	946.84	946.76	946.67	946.58	946.48	946.38	946.29	946.19
BEAM D	947.44	947.37	947.30	947.23	947.16	947.08	947.01	946.93	946.84	946.76	946.67	946.58	946.49	946.40	946.30	946.20	946.10
BEAM E	947.29	947.23	947.16	947.09	947.01	946.94	946.86	946.78	946.70	946.61	946.53	946.44	946.35	946.25	946.16	946.06	945.96
BEAM F	947.15	947.08	947.01	946.94	946.87	946.79	946.72	946.64	946.55	946.47	946.38	946.29	946.20	946.11	946.01	945.91	945.81
SOUTH GUTTER LINE	947.11	947.04	946.97	946.90	946.83	946.76	946.68	946.60	946.52	946.43	946.34	946.26	946.16	946.07	945.97	945.87	945.77

PROGRESS PLANS
6/10/2019

DESIGN FOR 0° SKEW
1097'-0 X 40'-0 PRETENSIONED
PRESTRESSED CONCRETE BEAM W.B. BRIDGE
156'-0 END SPANS 157'-0 INTERIOR SPAN
TOP OF SLAB ELEVATIONS
IA 2 STA. 400+85.00, LT. 32.00' JUNE 2019
FREMONT COUNTY
IOWA DEPARTMENT OF TRANSPORTATION - HIGHWAY DIVISION
DESIGN SHEET NO. 31 OF ? FILE NO. 31719 DESIGN NO. 219

TABLE OF BEAM LINE HAUNCH ELEVATIONS

	℄ WEST ABUT.BRG.																℄ PIER #1 BEARING										
LOCATION	LINE 1	LINE 2	LINE 3	LINE 4	LINE 5	LINE 6	LINE 7	LINE 8	LINE 9	LINE 10	LINE 11	LINE 12	LINE 13	LINE 14	LINE 15	LINE 16	LINE 17	LINE 18	LINE 19	LINE 20	LINE 21	LINE 22	LINE 23	LINE 24	LINE 25	LINE 26	LINE 27
BEAM A	944.58	944.70	944.82	944.94	945.05	945.14	945.23	945.30	945.35	945.39	945.42	945.43	945.43	945.42	945.41	945.38	945.35	945.36	945.48	945.60	945.71	945.82	945.91	945.99	946.06	946.12	946.16
BEAM B	944.72	944.85	944.97	945.08	945.19	945.29	945.37	945.44	945.50	945.54	945.57	945.58	945.58	945.57	945.55	945.52	945.50	945.51	945.63	945.75	945.86	945.96	946.06	946.14	946.21	946.26	946.30
BEAM C	944.86	944.98	945.11	945.22	945.33	945.43	945.51	945.58	945.63	945.68	945.70	945.72	945.72	945.71	945.69	945.66	945.63	945.64	945.77	945.88	946.00	946.10	946.19	946.28	946.34	946.40	946.44
BEAM D	944.79	944.91	945.03	945.15	945.26	945.35	945.44	945.51	945.56	945.60	945.63	945.64	945.64	945.63	945.61	945.59	945.56	945.57	945.69	945.81	945.92	946.03	946.12	946.20	946.27	946.33	946.37
BEAM E	944.64	944.77	944.89	945.00	945.11	945.21	945.29	945.36	945.42	945.46	945.48	945.50	945.50	945.49	945.47	945.44	945.42	945.43	945.55	945.67	945.78	945.88	945.98	946.06	946.13	946.18	946.22
BEAM F	944.50	944.62	944.74	944.86	944.97	945.06	945.15	945.22	945.27	945.31	945.34	945.35	945.35	945.34	945.33	945.30	945.27	945.28	945.40	945.52	945.63	945.74	945.83	945.91	945.98	946.04	946.08

TABLE OF BEAM LINE HAUNCH ELEVATIONS

						℄ PIER #2 BEARING	
LINE 28	LINE 29	LINE 30	LINE 31	LINE 32	LINE 33	LINE 34	LOCATION
946.19	946.20	946.20	946.20	946.18	946.16	946.14	BEAM A
946.33	946.35	946.35	946.34	946.33	946.31	946.28	BEAM B
946.47	946.48	946.49	946.48	946.47	946.44	946.42	BEAM C
946.40	946.41	946.41	946.41	946.39	946.37	946.35	BEAM D
946.25	946.27	946.27	946.26	946.25	946.23	946.20	BEAM E
946.11	946.12	946.12	946.12	946.10	946.08	946.06	BEAM F

MISCELLANEOUS DATA TABLE

	BEAM LINE		℄ WEST ABUT.BRG.															℄ PIER #1 BEARING									
			LINE 1	LINE 2	LINE 3	LINE 4	LINE 5	LINE 6	LINE 7	LINE 8	LINE 9	LINE 10	LINE 11	LINE 12	LINE 13	LINE 14	LINE 15	LINE 16	LINE 17	LINE 18	LINE 19	LINE 20	LINE 21	LINE 22	LINE 23	LINE 24	LINE 25	LINE 26
ANTICIPATED DEFLECTION DUE TO SLAB (IN.)	ALL		0	15/16	1 13/16	2 5/8	3 5/16	3 7/8	4 5/16	4 9/16	4 11/16	4 9/16	4 5/16	3 7/8	3 5/16	2 5/8	1 13/16	15/16	0	0	7/8	1 11/16	2 1/2	3 1/8	3 11/16	4 1/16	4 5/16	4 7/16
CROSS SLOPE ADJUSTMENTS (IN.)	A,B,C,E,F		5/16																									
	D		1/4																									
ALLOWABLE FIELD HAUNCH (IN. & FT.)	MIN.	ALL	1/4	1/4	-3/16													1/4	1/4	1/4	1/4	-3/16						
	MAX.	ALL	3 1/4	3 1/4	2 1/2													3 1/4	3 1/4	3 1/4	3 1/4	2 1/2						

MISCELLANEOUS DATA TABLE

								℄ PIER #2 BRG.	BEAM LINE		
LINE 27	LINE 28	LINE 29	LINE 30	LINE 31	LINE 32	LINE 33	LINE 34				
4 5/16	4 1/16	3 11/16	3 1/8	2 1/2	1 11/16	7/8	0	ALL			ANTICIPATED DEFLECTION DUE TO SLAB (IN.)
5/16								A,B,C,E,F			CROSS SLOPE ADJUSTMENTS (IN.)
1/4								D			
-3/16						1/4	1/4	MIN.	ALL		ALLOWABLE FIELD HAUNCH (IN. & FT.)
2 1/2						3 1/4	3 1/4	MAX.	ALL		

HAUNCH LOCATIONS ARE THE SAME LOCATION AS THE ENCIRCLED LETTERS SHOWN ON SLAB ELEVATIONS SHEETS.

PROGRESS PLANS
6/10/2019

DESIGN FOR 0° SKEW

1097'-0 X 40'-0 PRETENSIONED PRESTRESSED CONCRETE BEAM W.B. BRIDGE

156'-0 END SPANS 157'-0 INTERIOR SPAN

HAUNCH DETAILS

IA 2 STA. 400+85.00, LT. 32.00' JUNE 2019

FREMONT COUNTY

IOWA DEPARTMENT OF TRANSPORTATION - HIGHWAY DIVISION

DESIGN SHEET NO. 32 OF ? FILE NO. 31719 DESIGN NO. 219

TABLE OF BEAM LINE HAUNCH ELEVATIONS

	℄ PIER #3 BEARING																℄ PIER #4 BRG.										
LOCATION	LINE 35	LINE 36	LINE 37	LINE 38	LINE 39	LINE 40	LINE 41	LINE 42	LINE 43	LINE 44	LINE 45	LINE 46	LINE 47	LINE 48	LINE 49	LINE 50	LINE 51	LINE 52	LINE 53	LINE 54	LINE 55	LINE 56	LINE 57	LINE 58	LINE 59	LINE 60	LINE 61
BEAM A	946.15	946.27	946.39	946.50	946.60	946.70	946.78	946.85	946.90	946.94	946.97	946.99	946.99	946.98	946.97	946.95	946.92	946.93	947.05	947.17	947.28	947.37	947.46	947.53	947.58	947.62	947.64
BEAM B	946.29	946.41	946.53	946.64	946.75	946.84	946.92	946.99	947.05	947.09	947.12	947.13	947.13	947.13	947.11	947.09	947.07	947.08	947.20	947.31	947.42	947.52	947.60	947.67	947.73	947.76	947.79
BEAM C	946.43	946.55	946.67	946.78	946.88	946.98	947.06	947.13	947.18	947.23	947.25	947.27	947.27	947.27	947.25	947.23	947.20	947.21	947.34	947.45	947.56	947.65	947.74	947.81	947.86	947.90	947.92
BEAM D	946.36	946.48	946.60	946.71	946.81	946.91	946.99	947.06	947.11	947.15	947.18	947.20	947.20	947.19	947.18	947.16	947.13	947.14	947.26	947.38	947.48	947.58	947.67	947.74	947.79	947.83	947.85
BEAM E	946.21	946.33	946.45	946.56	946.67	946.76	946.84	946.91	946.97	947.01	947.04	947.05	947.05	947.05	947.03	947.01	946.99	947.00	947.12	947.23	947.34	947.44	947.52	947.59	947.65	947.68	947.71
BEAM F	946.07	946.19	946.31	946.42	946.52	946.62	946.70	946.77	946.82	946.86	946.89	946.91	946.91	946.90	946.89	946.87	946.84	946.85	946.97	947.09	947.20	947.29	947.38	947.45	947.50	947.54	947.56

TABLE OF BEAM LINE HAUNCH ELEVATIONS

						℄ PIER #5 BRG.	
LINE 62	LINE 63	LINE 64	LINE 65	LINE 66	LINE 67	LINE 68	LOCATION
947.65	947.64	947.62	947.58	947.54	947.48	947.42	BEAM A
947.79	947.78	947.76	947.73	947.68	947.63	947.57	BEAM B
947.93	947.92	947.90	947.86	947.82	947.76	947.70	BEAM C
947.86	947.85	947.83	947.79	947.75	947.69	947.63	BEAM D
947.71	947.70	947.68	947.65	947.60	947.55	947.49	BEAM E
947.57	947.56	947.54	947.50	947.46	947.40	947.34	BEAM F

MISCELLANEOUS DATA TABLE

	BEAM LINE		℄ PIER #2 BRG.															℄ PIER #3 BRG.									
			LINE 35	LINE 36	LINE 37	LINE 38	LINE 39	LINE 40	LINE 41	LINE 42	LINE 43	LINE 44	LINE 45	LINE 46	LINE 47	LINE 48	LINE 49	LINE 50	LINE 51	LINE 52	LINE 53	LINE 54	LINE 55	LINE 56	LINE 57	LINE 58	LINE 59	LINE 60
ANTICIPATED DEFLECTION DUE TO SLAB (IN.)	ALL		0	7/8	1 11/16	2 1/2	3 1/8	3 11/16	4 1/16	4 5/16	4 7/16	4 5/16	4 1/16	3 11/16	3 1/8	2 1/2	1 11/16	7/8	0	0	7/8	1 11/16	2 1/2	3 1/8	3 11/16	4 1/16	4 5/16	4 7/16
CROSS SLOPE ADJUSTMENTS (IN.)	A,B,C,E,F		5/16																									
	D		1/4																									
ALLOWABLE FIELD HAUNCH (IN. & FT.)	MIN.	ALL	1/4	1/4	-3/16													1/4	1/4	1/4	1/4	-3/16						
	MAX.	ALL	3 1/4	3 1/4	2 1/2													3 1/4	3 1/4	3 1/4	3 1/4	2 1/2						

MISCELLANEOUS DATA TABLE

								℄ PIER #4 BRG.	BEAM LINE		
LINE 61	LINE 62	LINE 63	LINE 64	LINE 65	LINE 66	LINE 67	LINE 68				
4 5/16	4 1/16	3 11/16	3 1/8	2 1/2	1 11/16	7/8	0		ALL		ANTICIPATED DEFLECTION DUE TO SLAB (IN.)
5/16									A,B,C,E,F		CROSS SLOPE ADJUSTMENTS (IN.)
1/4									D		
-3/16						1/4	1/4		MIN.	ALL	ALLOWABLE FIELD HAUNCH (IN. & FT.)
2 1/2						3 1/4	3 1/4		MAX.	ALL	

PROGRESS PLANS
6/10/2019

DESIGN FOR 0° SKEW

1097'-0 X 40'-0 PRETENSIONED PRESTRESSED CONCRETE BEAM W.B. BRIDGE

156'-0 END SPANS 157'-0 INTERIOR SPAN

HAUNCH DETAILS

IA 2 STA. 400+85.00, LT. 32.00' JUNE 2019

FREMONT COUNTY

IOWA DEPARTMENT OF TRANSPORTATION - HIGHWAY DIVISION

DESIGN SHEET NO. 33 OF 2 FILE NO. 31719 DESIGN NO. 219

TABLE OF BEAM LINE HAUNCH ELEVATIONS

	℄ PIER #4 BEARING																℄ PIER #5 BEARING										
LOCATION	LINE 69	LINE 70	LINE 71	LINE 72	LINE 73	LINE 74	LINE 75	LINE 76	LINE 77	LINE 78	LINE 79	LINE 80	LINE 81	LINE 82	LINE 83	LINE 84	LINE 85	LINE 86	LINE 87	LINE 88	LINE 89	LINE 90	LINE 91	LINE 92	LINE 93	LINE 94	LINE 95
BEAM A	947.42	947.51	947.58	947.65	947.71	947.76	947.79	947.81	947.81	947.79	947.76	947.71	947.65	947.58	947.50	947.40	947.31	947.30	947.35	947.39	947.42	947.44	947.45	947.44	947.42	947.38	947.33
BEAM B	947.57	947.65	947.73	947.80	947.86	947.90	947.94	947.95	947.95	947.94	947.91	947.86	947.80	947.73	947.64	947.55	947.45	947.45	947.49	947.53	947.56	947.58	947.59	947.58	947.56	947.52	947.47
BEAM C	947.71	947.79	947.87	947.94	948.00	948.04	948.07	948.09	948.09	948.07	948.04	948.00	947.94	947.86	947.78	947.69	947.59	947.58	947.63	947.67	947.70	947.72	947.73	947.72	947.70	947.66	947.61
BEAM D	947.63	947.72	947.79	947.86	947.92	947.97	948.00	948.02	948.02	948.00	947.97	947.92	947.86	947.79	947.71	947.61	947.52	947.51	947.55	947.59	947.63	947.65	947.65	947.65	947.63	947.59	947.54
BEAM E	947.49	947.57	947.65	947.72	947.78	947.82	947.86	947.87	947.87	947.86	947.83	947.78	947.72	947.64	947.56	947.47	947.37	947.37	947.41	947.45	947.48	947.50	947.51	947.50	947.48	947.44	947.39
BEAM F	947.34	947.43	947.50	947.57	947.63	947.68	947.71	947.73	947.73	947.71	947.68	947.63	947.57	947.50	947.42	947.32	947.23	947.22	947.27	947.31	947.34	947.36	947.36	947.36	947.34	947.30	947.25

TABLE OF BEAM LINE HAUNCH ELEVATIONS

						℄ PIER #6 BEARING																		℄ EAST ABUT. BRG.	
LINE 96	LINE 97	LINE 98	LINE 99	LINE 100	LINE 101	LINE 102	LINE 103	LINE 104	LINE 105	LINE 106	LINE 107	LINE 108	LINE 109	LINE 110	LINE 111	LINE 112	LINE 113	LINE 114	LINE 115	LINE 116	LINE 117	LINE 118	LINE 119	LOCATION
947.26	947.17	947.07	946.96	946.84	946.71	946.57	946.56	946.57	946.58	946.57	946.56	946.53	946.49	946.43	946.36	946.26	946.16	946.03	945.89	945.74	945.58	945.40	945.23	BEAM A
947.40	947.32	947.22	947.11	946.98	946.85	946.72	946.71	946.72	946.72	946.72	946.70	946.68	946.63	946.58	946.50	946.41	946.30	946.18	946.04	945.88	945.72	945.55	945.37	BEAM B
947.54	947.45	947.36	947.24	947.12	946.99	946.86	946.84	946.85	946.86	946.86	946.84	946.81	946.77	946.71	946.64	946.55	946.44	946.31	946.17	946.02	945.86	945.69	945.51	BEAM C
947.47	947.38	947.28	947.17	947.05	946.92	946.78	946.77	946.78	946.79	946.78	946.77	946.74	946.70	946.64	946.57	946.47	946.37	946.24	946.10	945.95	945.79	945.61	945.43	BEAM D
947.32	947.24	947.14	947.03	946.90	946.77	946.64	946.63	946.64	946.64	946.64	946.62	946.60	946.55	946.50	946.42	946.33	946.22	946.10	945.96	945.80	945.64	945.47	945.29	BEAM E
947.18	947.09	946.99	946.88	946.76	946.63	946.49	946.48	946.49	946.50	946.49	946.48	946.45	946.41	946.35	946.28	946.18	946.08	945.95	945.81	945.66	945.50	945.32	945.15	BEAM F

MISCELLANEOUS DATA TABLE

	BEAM LINE		℄ PIER #4 BRG.															℄ PIER #5 BRG.									
			LINE 69	LINE 70	LINE 71	LINE 72	LINE 73	LINE 74	LINE 75	LINE 76	LINE 77	LINE 78	LINE 79	LINE 80	LINE 81	LINE 82	LINE 83	LINE 84	LINE 85	LINE 86	LINE 87	LINE 88	LINE 89	LINE 90	LINE 91	LINE 92	LINE 93	LINE 94
ANTICIPATED DEFLECTION DUE TO SLAB (IN.)	ALL		0	7/8	1 11/16	2 1/2	3 1/8	3 11/16	4 1/16	4 5/16	4 7/16	4 5/16	4 1/16	3 11/16	3 1/8	2 1/2	1 11/16	7/8	0	0	7/8	1 11/16	2 1/2	3 1/8	3 11/16	4 1/16	4 5/16	4 7/16
CROSS SLOPE ADJUSTMENTS (IN.)	A,B,C,E,F		5/16																									
	D		1/4																									
ALLOWABLE FIELD HAUNCH (IN. & FT.)	MIN.	ALL	1/4	1/4	-3/16													1/4	1/4	1/4	1/4	-3/16						
	MAX.	ALL	3 1/4	3 1/4	2 1/2													3 1/4	3 1/4	3 1/4	3 1/4	2 1/2						

MISCELLANEOUS DATA TABLE

							℄ PIER #6 BRG.																	℄ EAST ABUT.BRG.	BEAM LINE		
LINE 95	LINE 96	LINE 97	LINE 98	LINE 99	LINE 100	LINE 101	LINE 102	LINE 103	LINE 104	LINE 105	LINE 106	LINE 107	LINE 108	LINE 109	LINE 110	LINE 111	LINE 112	LINE 113	LINE 114	LINE 115	LINE 116	LINE 117	LINE 118	LINE 119			
4 5/16	4 1/16	3 11/16	3 1/8	2 1/2	1 11/16	7/8	0	0	15/16	1 13/16	2 5/8	3 5/16	3 7/8	4 5/16	4 9/16	4 11/16	4 9/16	4 5/16	3 7/8	3 5/16	2 5/8	1 13/16	15/16	0	ALL		ANTICIPATED DEFLECTION DUE TO SLAB (IN.)
5/16																									A,B,C,E,F		CROSS SLOPE ADJUSTMENTS (IN.)
1/4																									D		
-3/16						1/4	1/4	1/4	1/4	-3/16												-3/16	1/4	1/4	MIN.	ALL	ALLOWABLE FIELD HAUNCH (IN. & FT.)
2 1/2						3 1/4	3 1/4	3 1/4	3 1/4	2 1/2												2 1/2	3 1/4	3 1/4	MAX.	ALL	

PROGRESS PLANS
6/10/2019

DESIGN FOR 0° SKEW

1097'-0 X 40'-0 PRETENSIONED PRESTRESSED CONCRETE BEAM W.B. BRIDGE

156'-0 END SPANS 157'-0 INTERIOR SPAN

HAUNCH DETAILS

IA 2 STA. 400+85.00, LT. 32.00' JUNE 2019

FREMONT COUNTY

IOWA DEPARTMENT OF TRANSPORTATION - HIGHWAY DIVISION

DESIGN SHEET NO. 34 OF 2 FILE NO. 31719 DESIGN NO. 219

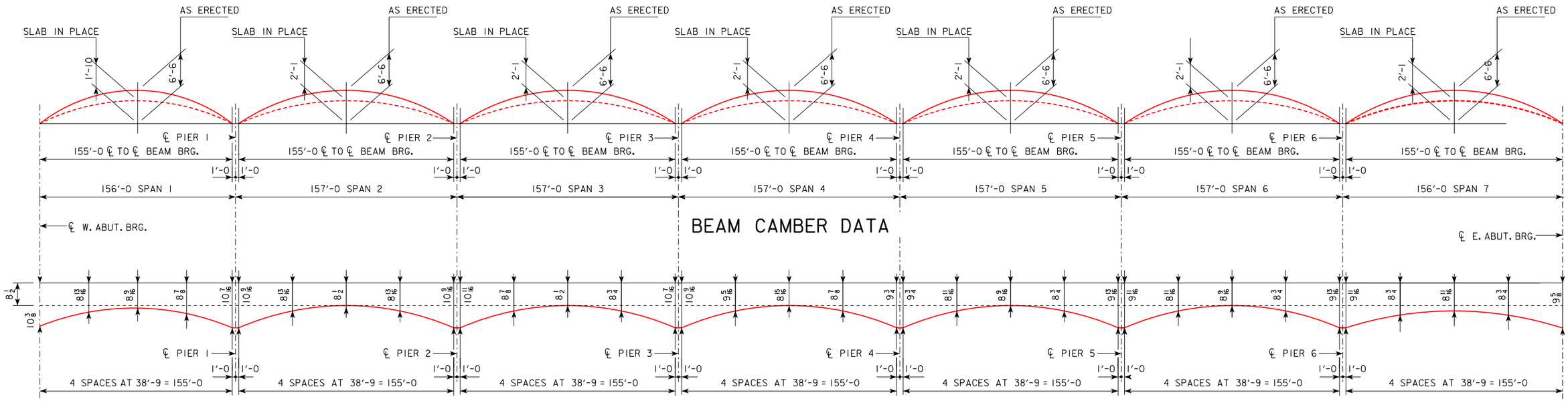

SLAB THICKNESS AT BEAMS (T)

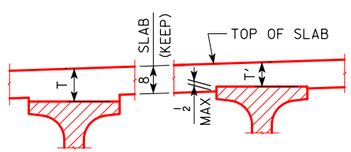

SLAB THICKNESS DETAILS

NOTE: THE SLAB THICKNESS (T) AT BEAMS IS BASED ON THE ANTICIPATED BEAM CAMBER AND DEFLECTIONS. THESE VALUES ARE USED BY THE DESIGNER TO SET BEAM ELEVATIONS AND ESTIMATE CONCRETE QUANTITIES. REFER TO THE HAUNCH DATA DETAILS SHEET FOR ADDITIONAL INFORMATION TO AID THE CONTRACTOR IN SETTING THE FIELD HAUNCHES REQUIRED FOR CONSTRUCTION.

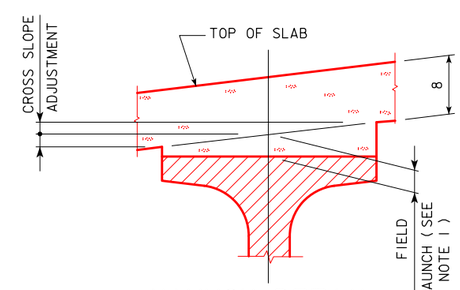

HAUNCH DETAIL

NOTE 1:
TO CALCULATE FIELD HAUNCH REQUIRED AT EACH LOCATION, SURVEY THE BEAM TOPS CONSISTENT WITH THE SPACINGS SHOWN ON THE "TOP OF SLAB ELEVATIONS LAYOUT". SUBTRACT THE SURVEYED BEAM SHOT FROM THE "BEAM LINE HAUNCH ELEVATION". THIS VALUE WILL BE THE HAUNCH NEEDED (SEE "FIELD HAUNCH" IN HAUNCH DETAIL). THE "BEAM LINE HAUNCH ELEVATION" INCLUDES ADJUSTMENTS FOR SLAB THICKNESSES AND ANTICIPATED DEFLECTIONS. NO ADDITIONAL CALCULATIONS ARE REQUIRED. IF THE FIELD HAUNCH EXCEEDS THE MAXIMUMS AND MINIMUMS SHOWN IN INCHES AND DECIMALS OF FEET IN THE MISCELLANEOUS DATA TABLE, ADJUSTMENTS TO THE GRADE OR ADDITIONAL HAUNCH REINFORCEMENT WILL BE REQUIRED.

NOTE:
BRIDGE SEAT ELEVATIONS ARE SET BASED ON THEORETICAL CAMBER AND BEAM DEFLECTIONS. THESE BRIDGE SEATS WILL PROVIDE A THEORETICAL BEAM HAUNCH WITHIN DESIGN PARAMETERS. FIELD HAUNCHES ARE DETERMINED USING SURVEYED TOP OF BEAM ELEVATIONS AND "BEAM LINE HAUNCH ELEVATION" DATA. ALLOWABLE MAXIMUM AND MINIMUM "FIELD HAUNCH" VALUES ARE GIVEN IN INCHES AND DECIMALS OF FEET IN THE "MISCELLANEOUS DATA" TABLE. "CROSS SLOPE ADJUSTMENT" VALUES WILL AID THE CONTRACTOR IN DETERMINING ACTUAL FORMED HAUNCH DIMENSIONS AT THE EDGES OF THE TOP FLANGE.

PROCESSED FOR PLANS 6/10/2019

DESIGN FOR 0° SKEW

1097'-0 X 40'-0 PRETENSIONED PRESTRESSED CONCRETE BEAM W.B. BRIDGE

156'-0 END SPANS — 157'-0 INTERIOR SPAN

SLAB THICKNESS DIAGRAM & DETAILS

IA 2 STA. 400+85.00, LT. 32.00' — JUNE 2019

FREMONT COUNTY

IOWA DEPARTMENT OF TRANSPORTATION - HIGHWAY DIVISION

DESIGN SHEET NO. 35 OF ? FILE NO. 31719 DESIGN NO. 219

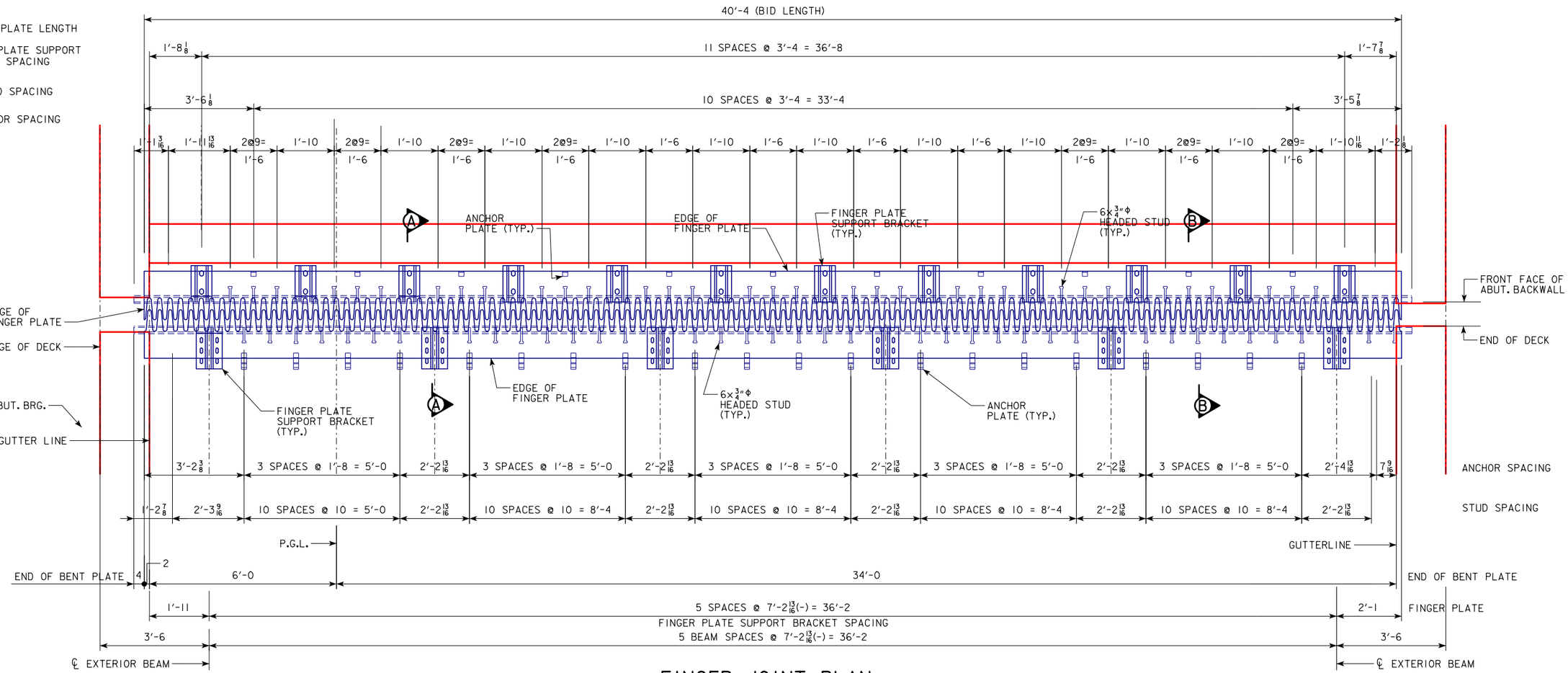

FINGER JOINT PLAN

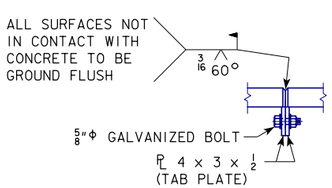

END VIEW

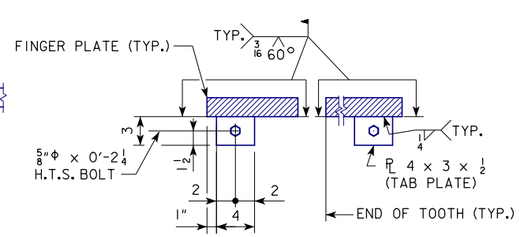

SECTION THRU FINGER PLATES

FIELD SPLICE DETAIL

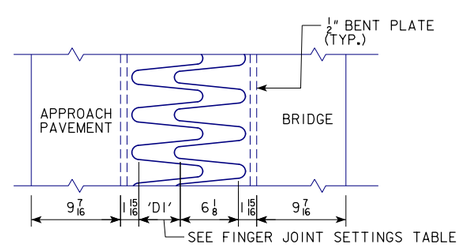

JOINT SETTING DETAIL

(PLAN VIEW)

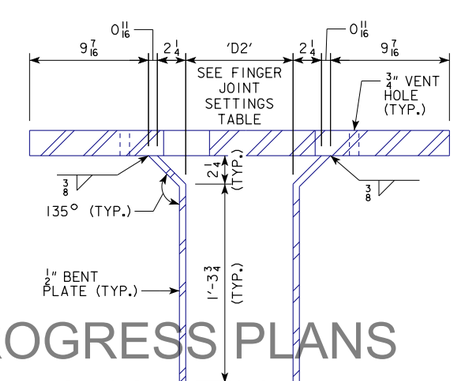

EXPANSION OPENING DETAIL

NOTES:

GALVANIZED COATING DAMAGE BY FIELD WELDING SHALL BE REPAIRED IN ACCORDANCE WITH MATERIALS I.M. 410.

ALL FINGER JOINT PARTS EXCEPT TROUGH HARDWARE SHALL BE GALVANIZED AFTER WELDING.

BARRIER EXPANSION DETAILS NOT SHOWN. SEE DESIGN SHEET ___ FOR DETAILS.

SEE DESIGN SHEET ___ FOR FINGER PLATE SUPPORT BRACKET AND ANCHOR PLATE DETAILS.

SEE DESIGN SHEET ___ FOR SECTION VIEWS.

FIELD CONSTRUCTION NOTES:

THE FINGER JOINT SPLICE LOCATION SHALL BE DETAILED ON THE SHOP DRAWINGS. THE CONNECTION DETAILS SHALL INCLUDE TAB PLATES AND PREPARED ENDS TO ACCOMMODATE THE NECESSARY WELDING. SEE DETAILS IN THESE PLANS.

GALVANIZED COATING DAMAGE BY FIELD WELDING SHALL BE REPAIRED IN ACCORDANCE WITH MATERIALS I.M. 410.

NOTE:
JOINT SETTINGS FOR OTHER TEMPERATURES ARE PROPORTIONAL. TEMPERATURES SHOWN ARE CONCRETE DECK TEMPERATURES ON THE UNDERSIDE OR SHADED PORTION OF THE DECK.

FINGER JOINT SETTINGS

TEMPERATURE (°F)	NORTH ABUTMENT	
	'D1'	'D2'
10	5 3/8"	9 1/2"
50	3 13/16"	8"
90	2 3/16"	6 3/8"

PROGRESS PLANS
6/10/2019

DESIGN FOR 0° SKEW

1097'-0 X 40'-0 PRETENSIONED PRESTRESSED CONCRETE BEAM W.B. BRIDGE

156'-0 END SPANS — 157'-0 INTERIOR SPAN

FINGER PLATE DETAILS

IA 2 STA. 400+85.00, LT. 32.00' — JUNE 2019

FREMONT COUNTY

IOWA DEPARTMENT OF TRANSPORTATION - HIGHWAY DIVISION

DESIGN SHEET NO. 36 OF 7 FILE NO. 31719 DESIGN NO. 219

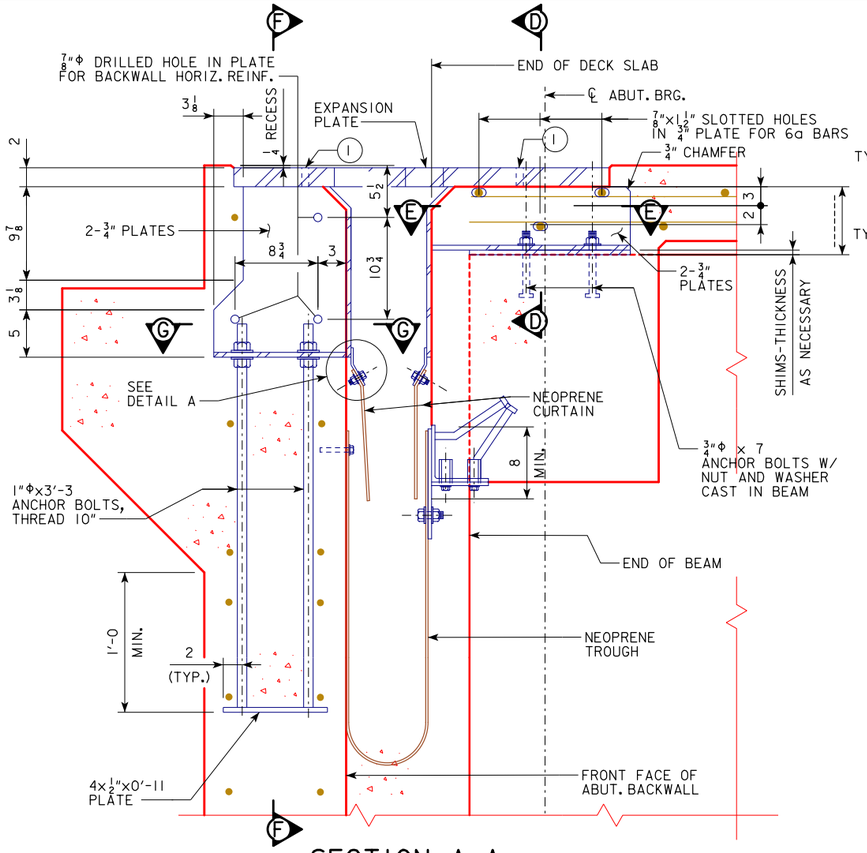

SECTION A-A

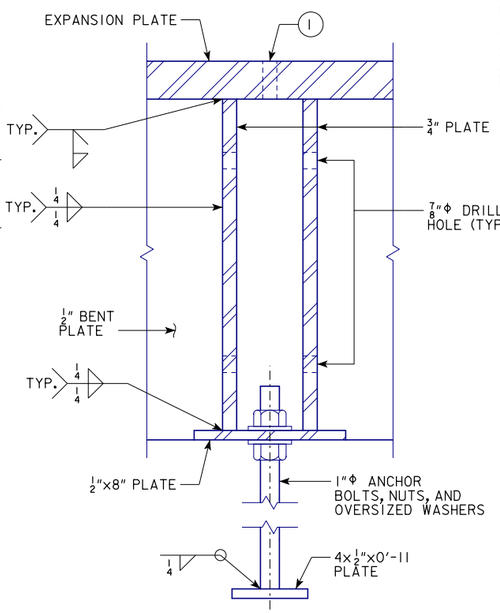

SECTION F-F
(SUPPORT BRACKET ASSEMBLY)

SHIM NOTE:
CONTRACTOR TO PROVIDE 2 - 1/4" SHIMS AND 1 - 1/8" SHIM FOR EACH BRACKET CONNECTED TO CONCRETE BEAM. IN ADDITION, ONE TAPERED SHIM SHALL BE PROVIDED AT EACH BRACKET TO ACCOUNT FOR THE CROSS-SLOPE OF THE BRIDGE DECK. ALL SHIMS MAY NOT BE USED.

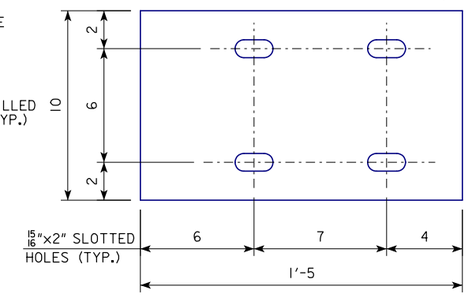

SHIM PLAN VIEW

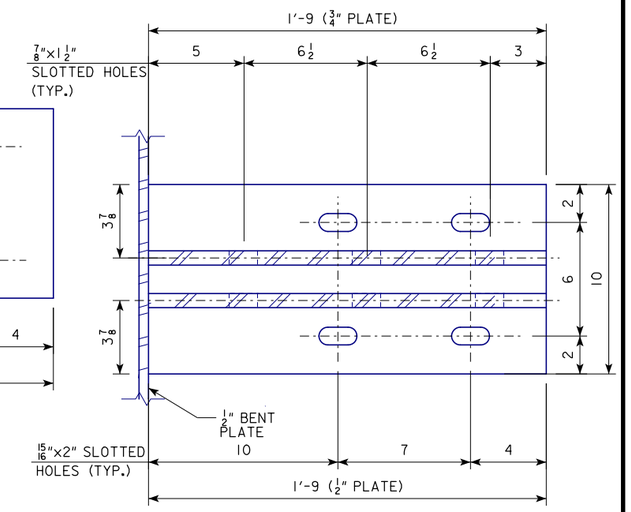

SECTION E-E

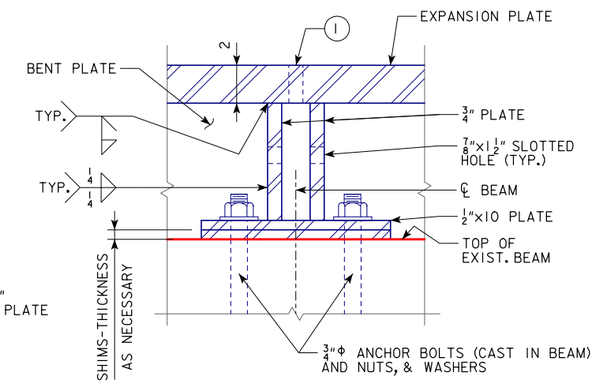

SECTION D-D
(SUPPORT BRACKET ASSEMBLY)

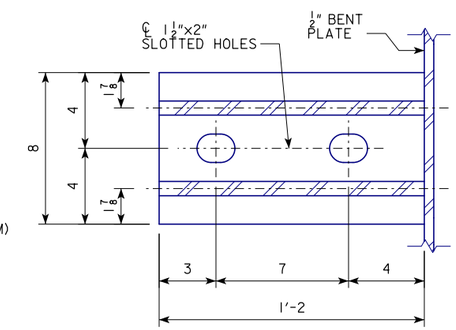

SECTION G-G

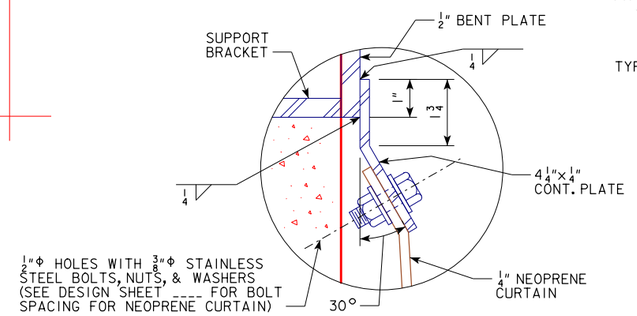

DETAIL A

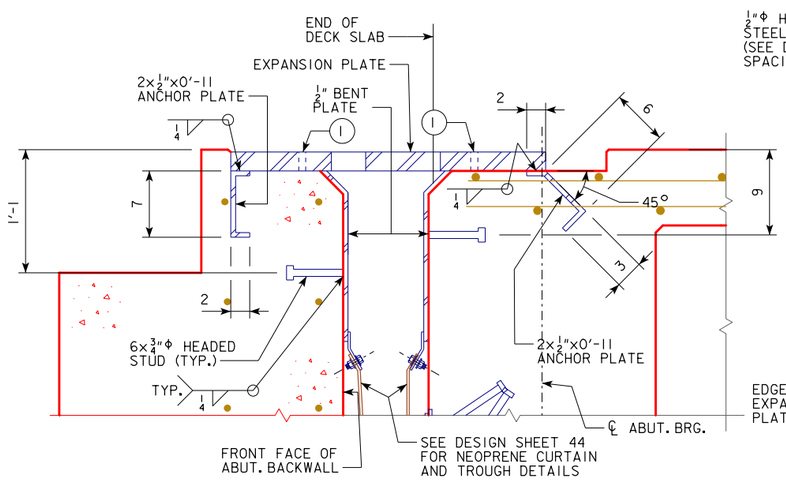

SECTION B-B

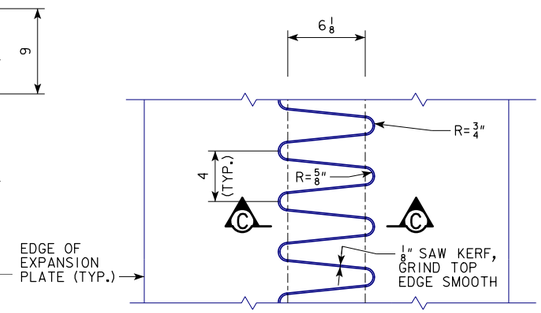

PART PLAN TOOTH LAYOUT

(1) PROVIDE 3/4"Φ AIR BLEED VENT HOLES. PROVIDE ONE HOLE CENTERED DIRECTLY ABOVE EACH BRACKET ASSEMBLY AND ADDITIONAL HOLES SPACED AT 1'-6 MAX. BETWEEN BRACKET ASSEMBLIES. UPON COMPLETION, FILL VENT HOLES WITH CONCRETE.

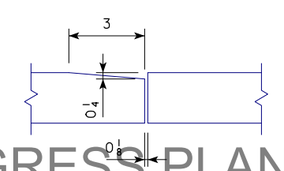

SECTION C-C

NOTE:
TOP OF EXPANSION DEVICE IS TO BE PARALLEL TO GRADE. FLAME CUT FROM 2'-6x2" PLATE. BEVEL EACH TOOTH 1/4"x3".

NOTES:

CONCRETE SHALL BE FORCED UNDER AND AROUND FINGER PLATE SUPPORTING HARDWARE, STUDS AND BARS. PROPER CONSOLIDATION SHALL BE ACHIEVED BY LOCALIZED INTERNAL VIBRATION.

PROGRESS PLANS
6/10/2019

DESIGN FOR 0° SKEW

1097'-0 X 40'-0 PRETENSIONED PRESTRESSED CONCRETE BEAM W.B. BRIDGE

156'-0 END SPANS 157'-0 INTERIOR SPAN

EXPANSION DEVICE DETAILS

IA 2 STA. 400+85.00, LT. 32.00' JUNE 2019

FREMONT COUNTY

IOWA DEPARTMENT OF TRANSPORTATION - HIGHWAY DIVISION

DESIGN SHEET NO. 37 OF ? FILE NO. 31719 DESIGN NO. 219

NOTES:
1. SEE DESIGN SHEET 20 FOR NEOPRENE CURTAIN AND TROUGH DETAILS.
2. UPON COMPLETION OF FINGER JOINT AND DRAINAGE TROUGH INSTALLATION, THE CONTRACTOR SHALL FLUSH THE SYSTEM WITH WATER TO TEST THAT WATER IS PROPERLY DIRECTED INTO THE DRAIN BLOCK AND BERM BLOCK WITHOUT LEAKING ONTO THE ABUTMENT SURFACES.
3. SEE DESIGN SHEETS 12 AND 13 FOR DRAIN BLOCK AND BERM BLOCK DETAILS.

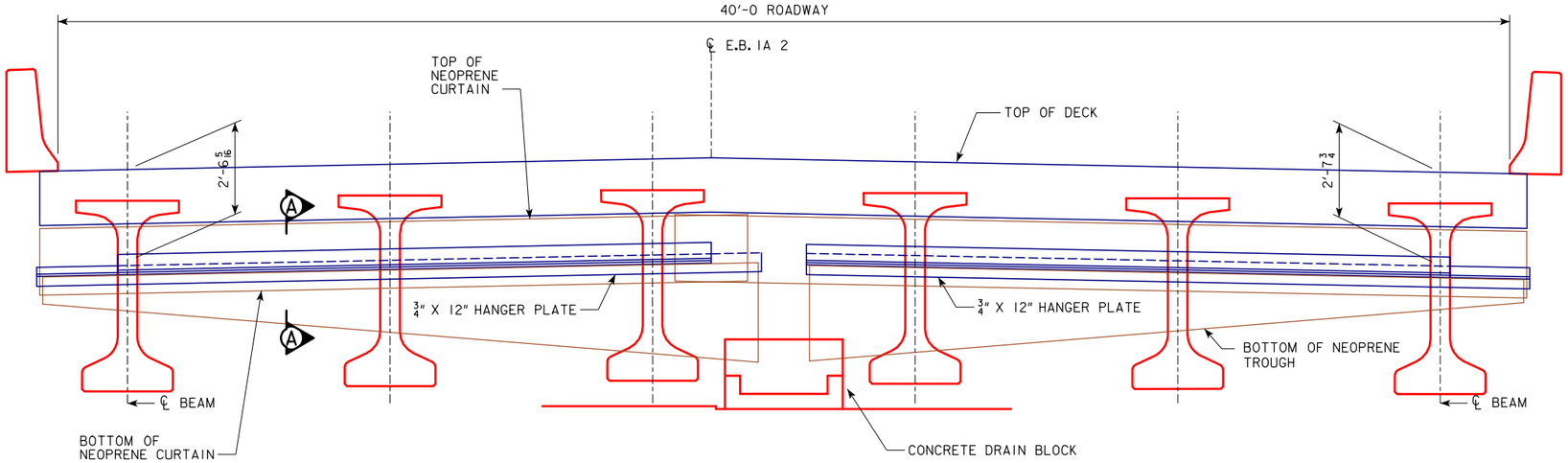

ELEVATION AT ABUTMENT JOINT
(EAST ABUTMENT SHOWN, WEST ABUTMENT SIMILAR)

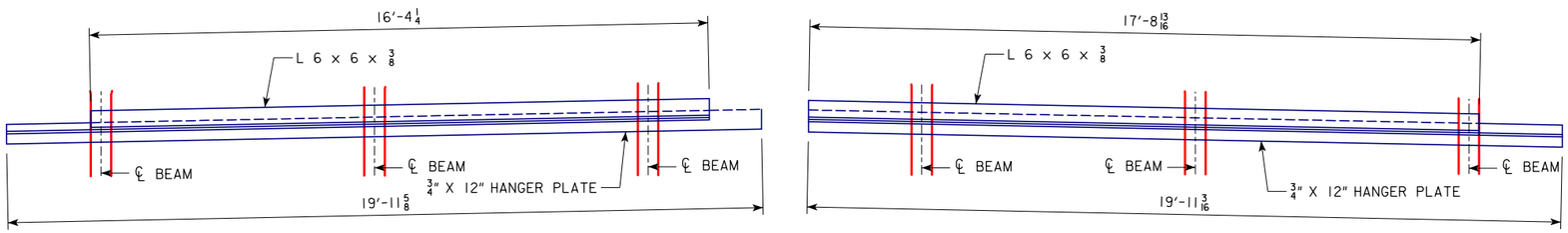

TROUGH HANGER PLATE DETAIL

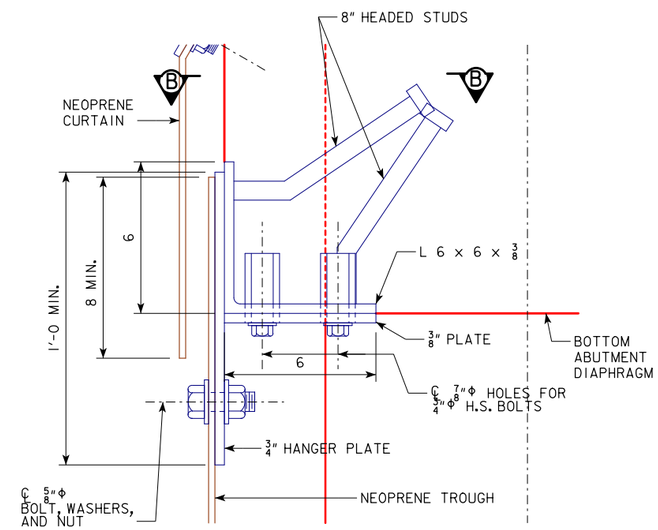

SECTION A-A

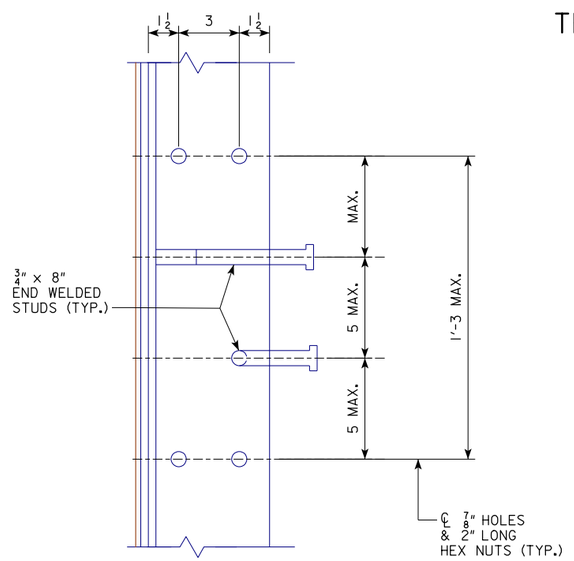

SECTION B-B

PROGRESS PLANS
6/10/2019

DESIGN FOR 0° SKEW
1097'-0 X 40'-0 PRETENSIONED PRESTRESSED CONCRETE BEAM W.B. BRIDGE
156'-0 END SPANS 157'-0 INTERIOR SPAN
EXPANSION JOINT DRAINAGE TROUGH DETAILS
IA 2 STA. 400+85.00, LT. 32.00' JUNE 2019
FREMONT COUNTY
IOWA DEPARTMENT OF TRANSPORTATION - HIGHWAY DIVISION
DESIGN SHEET NO. 38 OF ? FILE NO. 31719 DESIGN NO. 219

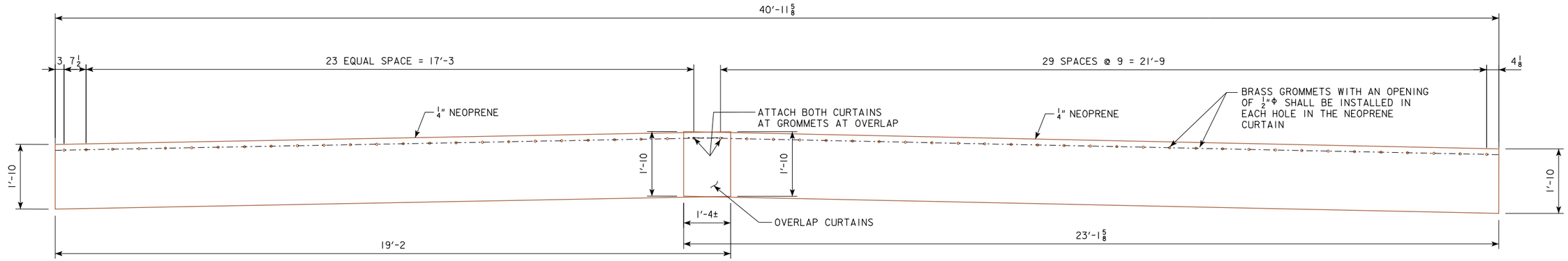

ELEVATION VIEW - NEOPRENE CURTAINS

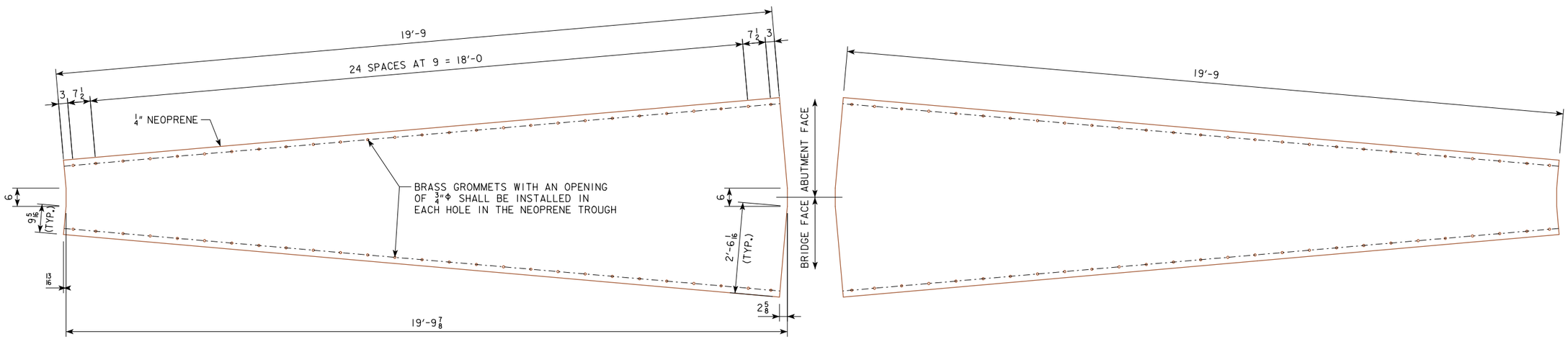

PLAN VIEW - NEOPRENE TROUGHS

NEOPRENE NOTES:

THE ELASTOMER COMPOUND FOR TROUGHS AND CURTAINS SHALL BE IN ACCORDANCE WITH TABLE 4195.02-2 OF THE STANDARD SPECIFICATIONS, EXCEPT THE TENSILE STRENGTH SHALL BE 1500 PSI MINIMUM OR IT SHALL BE (EPDM) ETHYLENE PROPYENE DIENE MONOMER (ASTM D 200, LINE CALL OUTS 3BA, 515, A14, B13, F17, C12, K21).

STAINLESS STEEL BOLTS, WASHERS, NUTS AND CONCRETE ANCHORS SHALL MEET THE REQUIREMENTS OF ASTM 193 AND IOWA D.O.T. I.M. 453.07.

ORIGINAL PLANS
6/10/2019

DESIGN FOR 0° SKEW

1097'-0 X 40'-0 PRETENSIONED PRESTRESSED CONCRETE BEAM W.B. BRIDGE

156'-0 END SPANS 157'-0 INTERIOR SPAN

EXPANSION JOINT NEOPRENE DETAILS

IA 2 STA. 400+85.00, LT. 32.00' JUNE 2019

FREMONT COUNTY

IOWA DEPARTMENT OF TRANSPORTATION - HIGHWAY DIVISION

DESIGN SHEET NO. 39 OF ? FILE NO. 31719 DESIGN NO. 219

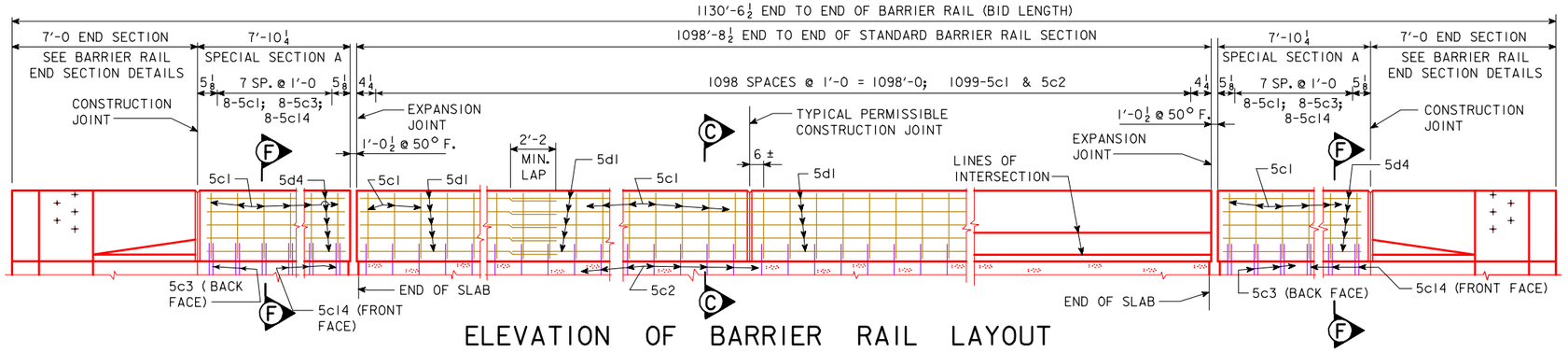

ELEVATION OF BARRIER RAIL LAYOUT

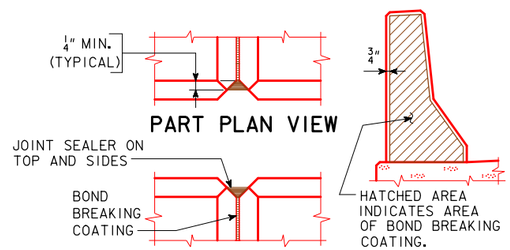

BARRIER RAIL JOINT DETAILS

NOTE: REINFORCING STEEL QUANTITIES ARE INCLUDED ON THE SUMMARY QUANTITIES SHEET.

Δ NOTE: CONDUIT SUPPORT BAR DETAILS AND QUANTITIES ARE ON DESIGN SHEET XX

EPOXY COATED REINF. STEEL - TWO RAILS

SECTION	BAR	LOCATION	SHAPE	NO.	LENGTH	WEIGHT
STANDARD SECTIONS	5c1	RAIL, VERTICAL		2198	5'-11	13564
	5d1	RAIL, LONGITUDINAL		522	40'-0	21778
SPECIAL SECTIONS	5c1	RAIL, VERTICAL		32	5'-11	197
	5d4	RAIL, LONGIT.- SPECIAL SECTION A		36	7'-6	282
					EPOXY STEEL TOTAL (LBS.)	35821

STAINLESS STEEL REINF. STEEL - TWO RAILS

SECTION	BAR	LOCATION	SHAPE	NO.	LENGTH	WEIGHT
STD. SECTS.	5c2	RAIL, VERTICAL		2198	6'-0	13755
SPECIAL SECTIONS	5c3	RAIL, VERTICAL		32	3'-3	108
	5c14	RAIL, VERTICAL		32	3'-10	128
					STAINLESS STEEL TOTAL (LBS.)	13991

BENT BAR DETAILS

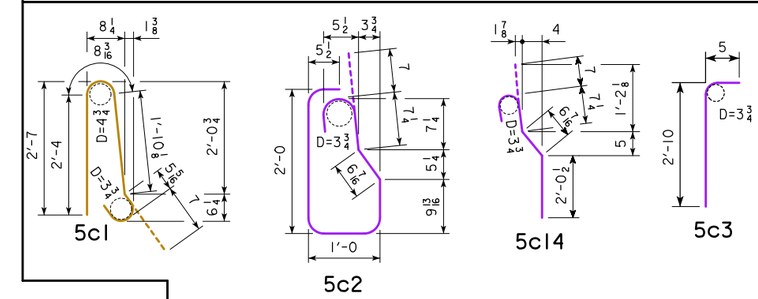

NOTE: ALL DIMENSIONS ARE OUT TO OUT. D = PIN DIAMETER.

CONCRETE PLACEMENT SUMMARY

SECTION		TOTAL
STANDARD SECTION	2197'-5 @ 0.1052 CU. YD. PER FT.	231.2
SPECIAL SECTION A	31'-5 @ 0.1052 CU. YD. PER FT.	3.3
	TOTAL (CU. YD.)	234.5

CONCRETE BARRIER RAIL QUANTITIES

ITEM	UNIT	QUANTITY
CONCRETE BARRIER RAILING	L.F.	2261

BARRIER RAIL NOTES:

MINIMUM CLEAR DISTANCE FROM FACE OF CONCRETE TO NEAR REINFORCING BAR IS TO BE 2" UNLESS OTHERWISE NOTED OR SHOWN.

THE PERMISSIBLE CONSTRUCTION JOINTS ARE TO BE PLACED BETWEEN VERTICAL BARS AT A MINIMUM SPACING OF 20 FEET. CONSTRUCTION JOINT CONTACT SURFACES ARE TO BE COATED WITH AN APPROVED BOND BREAKER.

COST OF THE JOINT SEALER AND BOND BREAKER SHALL BE CONSIDERED INCIDENTAL TO OTHER CONSTRUCTION.

ALL BARRIER RAIL REINFORCING STEEL IS TO BE EITHER EPOXY COATED OR STAINLESS STEEL AS SHOWN. THE STAINLESS STEEL REINFORCING STEEL SHALL BE DEFORMED BAR GRADE 60 MEETING THE REQUIREMENTS OF MATERIALS I.M. 452.

THE CONCRETE BARRIER RAIL IS TO BE BID ON A LINEAL FOOT BASIS. THE NUMBER OF LINEAL FEET OF BARRIER RAIL INSTALLED WILL BE PAID FOR AT THE CONTRACT PRICE PER LINEAL FOOT BASED ON PLAN QUANTITIES. PRICE BID FOR CONCRETE BARRIER RAILING SHALL BE FULL COMPENSATION FOR FURNISHING ALL MATERIAL, EXCLUDING REINFORCING STEEL, AND ALL OF THE EQUIPMENT AND LABOR REQUIRED TO ERECT THE RAIL IN ACCORDANCE WITH THESE PLANS AND CURRENT SPECIFICATIONS. IF CONDUIT IS REQUIRED IN THIS PLAN THE RIGID STEEL CONDUIT, JUNCTION BOXES AND FITTINGS INCLUDING LABOR AND ANY ADDITIONAL WORK TO DO THE INSTALLATION IS CONSIDERED INCIDENTAL TO THE COST OF THE RAILING.

THE JOINT SEALER SHALL BE LIGHT GRAY NONSAG LATEX CAULKING SEALER MARKETED FOR OUTDOOR USE. NO TESTING OR CERTIFICATION IS REQUIRED.

TOP OF THE BARRIER RAIL IS TO BE PARALLEL TO THE THEORETICAL ℄ GRADE.

CROSS SECTIONAL AREA OF THE STANDARD SECTION OF THE BARRIER RAIL = 2.84 SQUARE FEET.

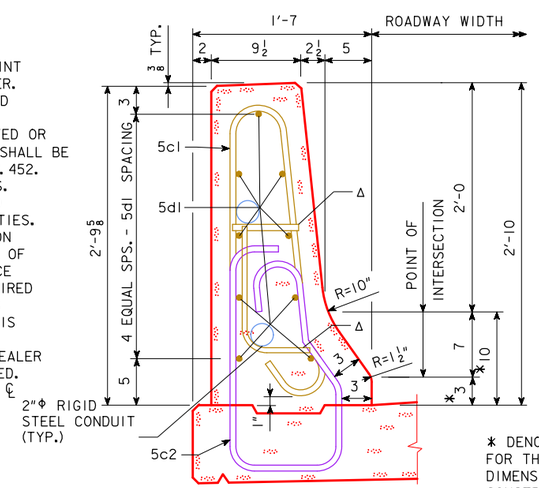

PART SECTION C-C

* DENOTES THE MAXIMUM VALUE FOR THIS DIMENSION. THIS DIMENSION MAY VARY DUE TO CONSTRUCTION INACCURACIES.

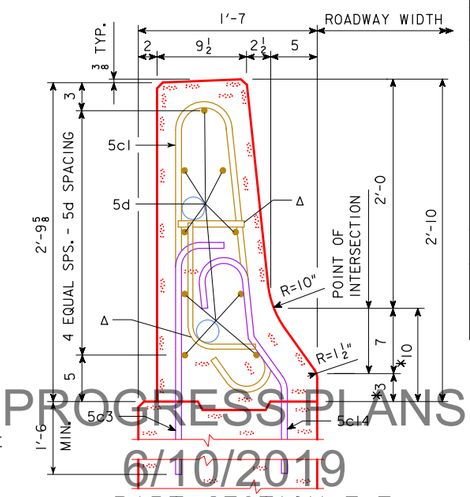

PART SECTION F-F

PROGRESS PLANS
6/10/2019

DESIGN FOR 0° SKEW

1097'-0 X 40'-0 PRETENSIONED PRESTRESSED CONCRETE BEAM W.B. BRIDGE

156'-0 END SPANS 157'-0 INTERIOR SPAN

BARRIER RAIL DETAILS

IA 2 STA. 400+85.00, LT. 32.00' JUNE 2019

FREMONT COUNTY

IOWA DEPARTMENT OF TRANSPORTATION - HIGHWAY DIVISION

DESIGN SHEET NO. 40 OF ? FILE NO. 31719 DESIGN NO. 219

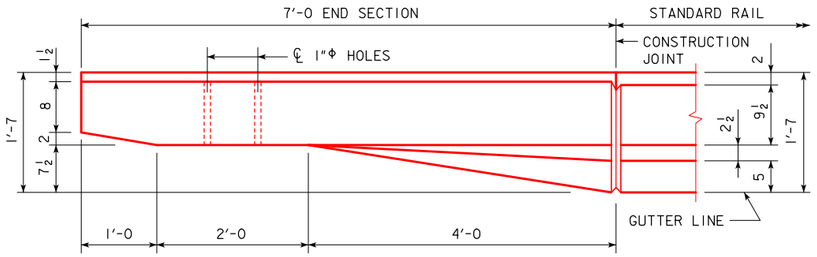

PART PLAN VIEW

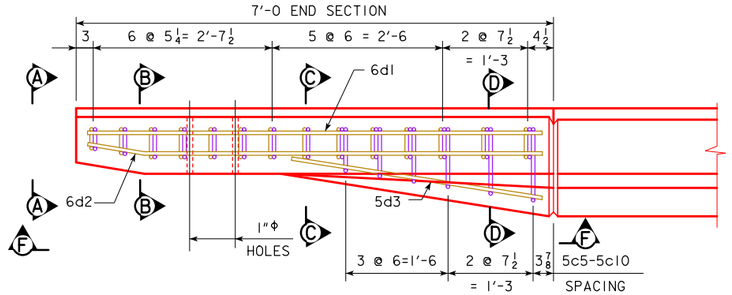

PART VIEW E-E

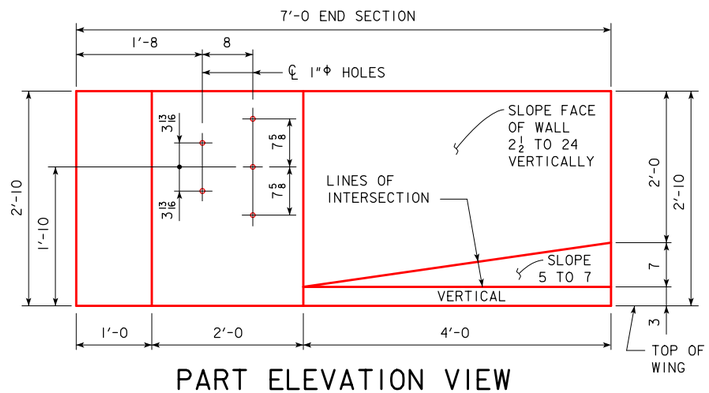

PART ELEVATION VIEW

PROVIDE 5 HOLES FORMED WITH 1"Φ PLASTIC CONDUIT. COST TO BE INCLUDED IN PRICE BID FOR CONCRETE BARRIER RAILING.

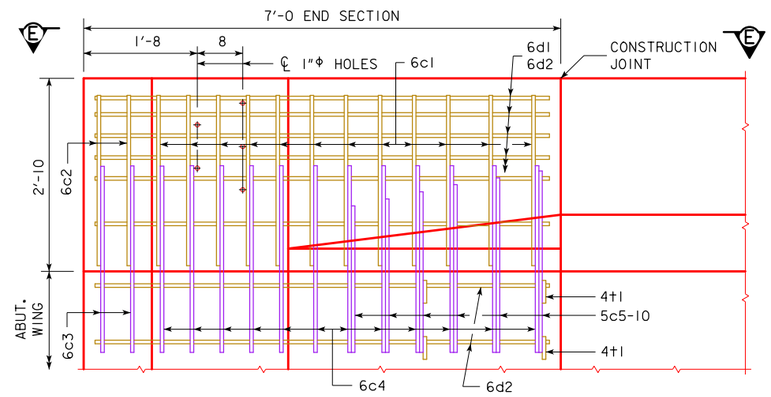

PART VIEW F-F

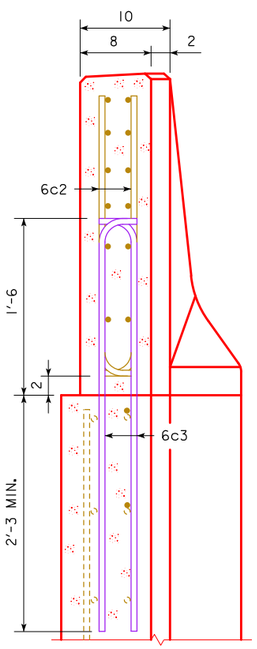

VIEW A-A

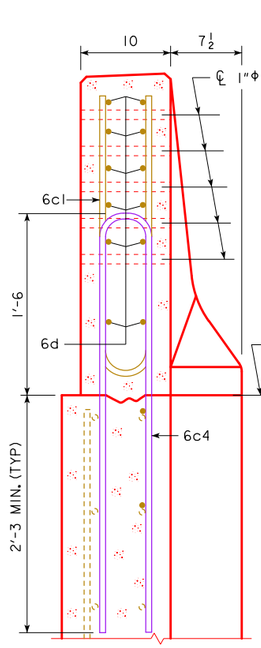

SECTION B-B

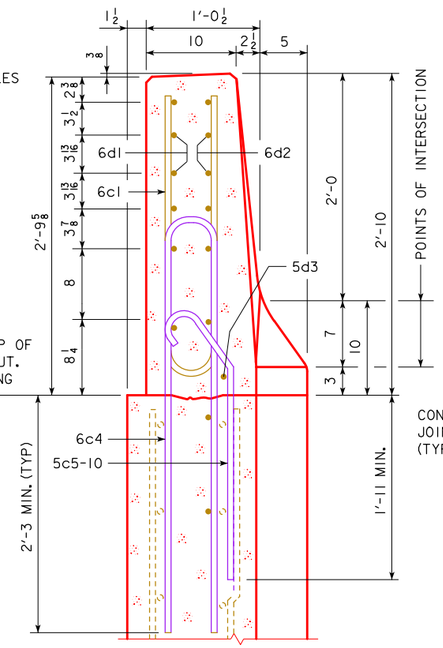

SECTION C-C

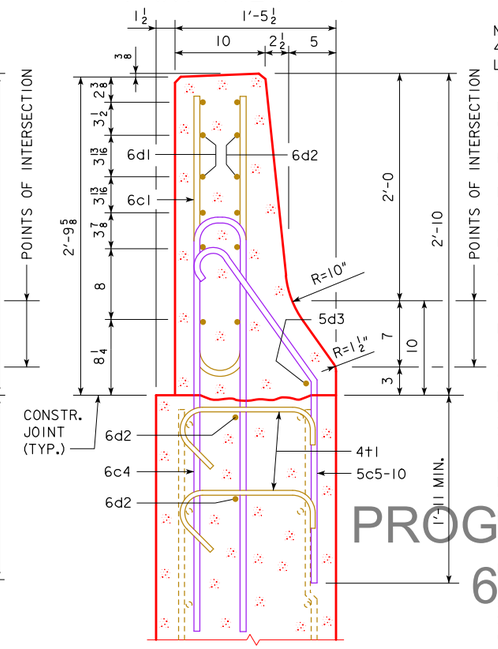

SECTION D-D

NOTE:
4t1 PLACEMENT- 2 BARS EACH LEVEL OF 6d2 IN WING FOOTING.

NOTE:
CONSTRUCTION JOINT BETWEEN TOP OF WING AND BARRIER RAIL IS ROUGHENED CONCRETE.

NOTE:
THE 10" RADIUS AND 1½" RADIUS ARE TYPICAL AND SHALL BE USED WHEN CONSTRUCTING THE CORNERS FOR VIEW A-A, SECTION B-B, SECTION C-C AND SECTION D-D.

NOTE:
THE 6c4, 6c3, 5c5-10, 2 - 6d2 AND 4t1 BARS ARE TO BE PLACED WITH THE ABUTMENT WING. THE DETAILS FOR PLACEMENT ARE SHOWN ON THE WING ABUTMENT SHEET.

NOTE:
DASHED LINES BELOW THE TOP OF WING ARE THE ABUTMENT WING REINFORCING STEEL. SEE WING ABUTMENT SHEET FOR PLACEMENT.

NOTE:
THIS SHEET APPLIES TO BARRIER END SECTIONS ON SW, NE, & SE WINGS. SEE DESIGN SHEET __ FOR BARRIER END SECTION DETAIL ON NW WING.

PROGRESS PRINTS
6/10/2019

EPOXY COATED REINF. STEEL - ONE END SECT.

BAR	LOCATION	SHAPE	NO.	LENGTH	WEIGHT
6c1	RAIL, VERTICAL		12	5'-6	99
6c2	RAIL, VERTICAL		4	2'-10	17
6d1	RAIL, HORIZONTAL		6	6'-8	60
6d2	RAIL, HORIZONTAL		8	6'-9	81
5d3	RAIL, HORIZONTAL		1	3'-9	4
4t1	RAIL, ABUTMENT WING TIE BARS		4	VARIES	5
				EPOXY REINF. TOTAL WEIGHT (LBS.)	266

STAINLESS STEEL REINF. STEEL - ONE END SECT.

BAR	LOCATION	SHAPE	NO.	LENGTH	WEIGHT
6c3	RAIL, VERTICAL		4	4'-1	25
6c4	RAIL, VERTICAL		12	8'-0	144
5c5-10	RAIL, VERTICAL		6	VARIES	23
				STAINLESS STEEL TOTAL WEIGHT (LBS.)	192

NOTE: REINFORCING STEEL QUANTITIES ARE INCLUDED ON THE SUMMARY QUANTITIES SHEET.

CONCRETE PLACEMENT SUMMARY

SECTION	TOTAL
BARRIER RAIL ONE END SECTION	0.65 CU. YD.

BENT BAR DETAILS

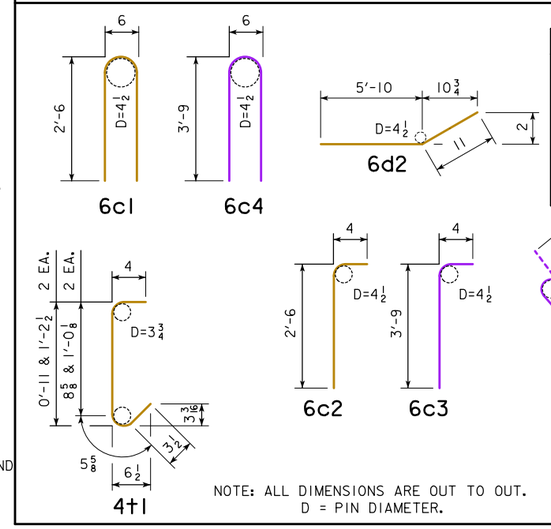

BAR	"X"
5c5	0'-6½
5c6	0'-8½
5c7	0'-10¼
5c8	1'-0¼
5c9	1'-2
5c10	1'-4

DESIGN FOR 0° SKEW

1097'-0 X 40'-0 PRETENSIONED PRESTRESSED CONCRETE BEAM W.B. BRIDGE

156'-0 END SPANS — 157'-0 INTERIOR SPAN

BARRIER RAIL END SECTION DETAILS

IA 2 STA. 400+85.00, LT. 32.00' — JUNE 2019

FREMONT COUNTY

IOWA DEPARTMENT OF TRANSPORTATION - HIGHWAY DIVISION

DESIGN SHEET NO. 41 OF ? FILE NO. 31719 DESIGN NO. 219

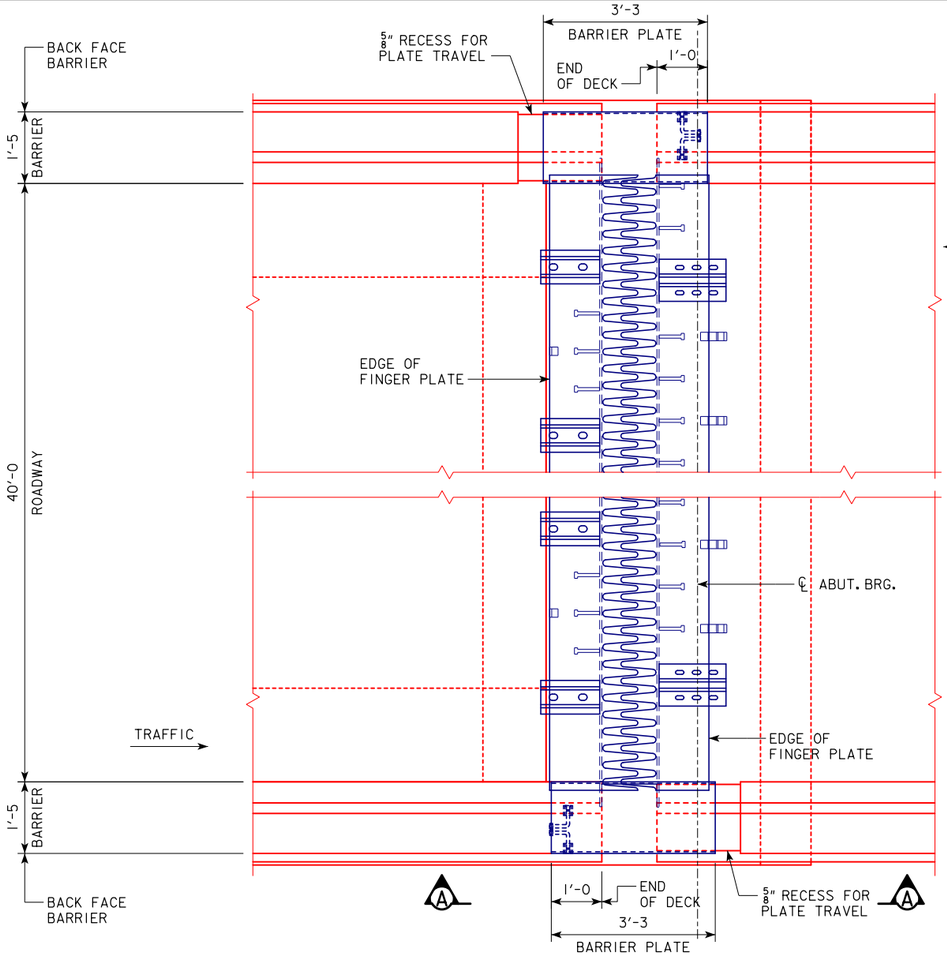

PART PLAN VIEW EXPANSION DEVICE

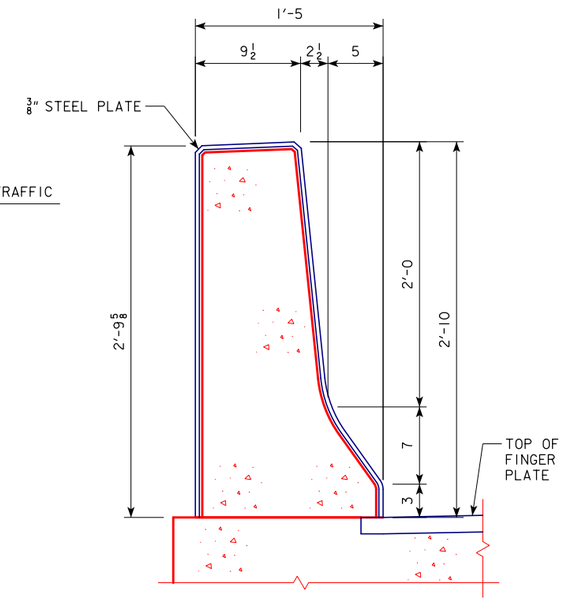

SECTION B-B

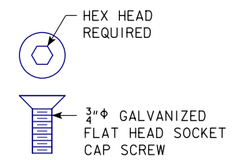

CAP SCREW DETAIL

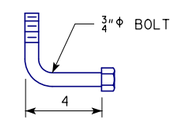

BENT BOLT DETAIL

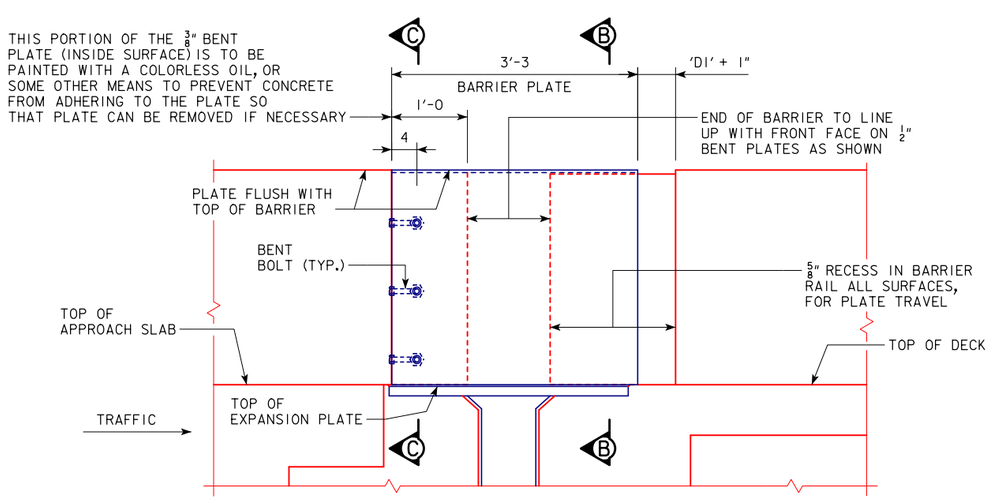

VIEW A-A

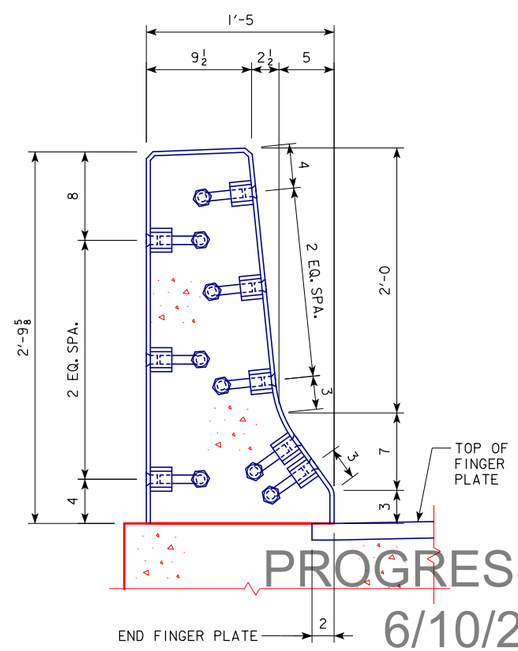

SECTION C-C

FINGER JOINT NOTES:

THE CONTRACTOR SHALL SUBMIT FOR APPROVAL SHOP DRAWINGS OF THE ENTIRE FINGER JOINT ASSEMBLY, BARRIER PLATES, NEOPRENE THROUGH AND CURTAIN SHOWING LAYOUT, MATERIAL TO BE USED, AND PROVISIONS FOR SECURELY HOLDING THE JOINT IN PLACE DURING PLACING OF CONCRETE. SHOP DRAWINGS SHALL INCLUDE PROVISIONS FOR STAGING CONSTRUCTION AS SHOWN IN THESE PLANS.

THE ENTIRE EXPANSION DEVICE SHALL BE GALVANIZED AFTER WELDING, EXCEPT HARDWARE DESIGNATED AS STAINLESS STEEL. THE ANCHORAGES, SHIMS, BOLTS, WASHERS, AND NUTS SHALL BE GALVANIZED.

THE TOP OF THE EXPANSION DEVICE SHALL BE RECESSED 1/4" BELOW THE TOP OF DECK, PARALLEL TO GRADE, AND MATCH THE ROADWAY CROSS-SLOPE.

CAP SCREWS SHALL BE COUNTERSUNK 1/16 INCH BELOW TOP OF PLATE.

THE MATERIAL USED FOR THE 2 x 2'-6 FINGER JOINT PLATES IS TO BE ASTM A572, GRADE 50 STEEL. ALL OTHER STRUCTURAL STEEL IS TO BE ASTM A709 GRADE 36 STEEL.

THE 3/8"Φ BOLTS AND WASHERS ATTACHING THE NEOPRENE CURTAIN TO THE 4 1/4 x 1/4 BENT PLATE AND THE 5/8"Φ BOLTS, NUTS AND WASHERS ATTACHING THE NEOPRENE TROUGH TO THE TROUGH HANGERS ARE TO BE ASTM A193 STAINLESS STEEL. ALL OTHER BOLTS SHALL MEET THE REQUIREMENTS OF ASTM A-307. THE PLATES, BOLTS, NUTS AND CAP SCREWS ARE TO BE GALVANIZED IN ACCORDANCE WITH ARTICLE 4100.07 OF THE STANDARD SPECIFICATIONS UNLESS OTHERWISE NOTED.

NOTES:

CONTRACTOR TO NOTE THAT THE CAP SCREW ANCHORAGE SYSTEM FOR THE 3/8" BARRIER PLATES ARE ALWAYS TO BE PLACED ON THE ONCOMING TRAFFIC SIDE.

IT IS INTENDED THAT THE 5/8" RECESSED AREA BE FORMED SO THAT WHEN THE 3/8" PLATE IS IN INSTALLED, THE PLATE WILL BE ABLE TO MOVE FREELY IN THIS RECESSED AREA.

SEE DESIGN SHEET 10 FOR BARRIER RAIL REINFORCING DETAILS.

* SEE DESIGN SHEET 17 FOR 'DI' VALUE.

PROGRESS PLANS
6/10/2019

DESIGN FOR 0° SKEW

1097'-0 X 40'-0 PRETENSIONED PRESTRESSED CONCRETE BEAM W.B. BRIDGE

156'-0 END SPANS 157'-0 INTERIOR SPAN

BARRIER RAIL EXPANSION PLATES

IA 2 STA. 400+85.00, LT. 32.00' JUNE 2019

FREMONT COUNTY

IOWA DEPARTMENT OF TRANSPORTATION - HIGHWAY DIVISION

DESIGN SHEET NO. 42 OF ? FILE NO. 31719 DESIGN NO. 219

BOSSED FOR	HOLE	FOR CONDUIT SIZE
5 THREADS	C	2"Φ RIGID STEEL
NONE	E	$\frac{1}{2}$"Φ COPPER PIPE

NOTE:
THE GROUNDING BUTTONS ARE TO BE BLIND DRILLED AND TAPPED FOR $\frac{3}{8}$"Φ x 0'-0$\frac{3}{4}$ BOLTS.

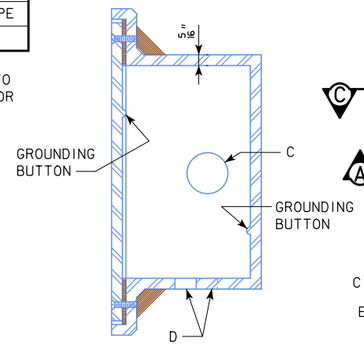

SECTION B-B

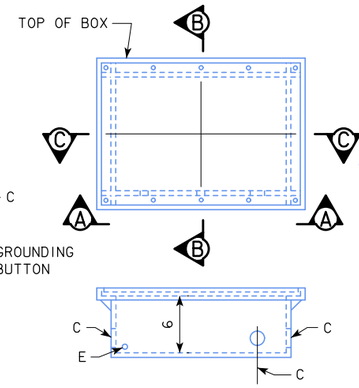

VIEW A-A

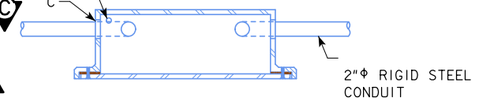

SECTION C-C

LI-104 JUNCTION BOX

WATERTIGHT, CAST IRON - FLUSH MOUNT

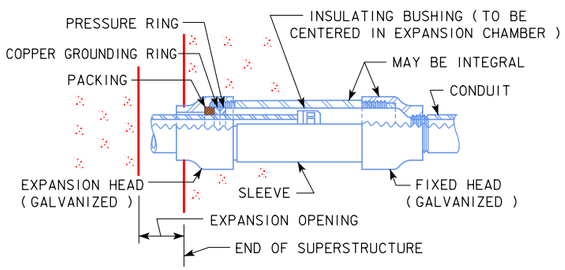

EXPANSION CHAMBER LENGTH IS 6" ???

EXPANSION FITTING DETAIL

(8 REQUIRED)

NOTES:

SEE LI-104 STANDARD ROAD PLAN FOR ADDITIONAL INFORMATION ON JUNCTION BOXES.

CONSTRUCTION SHALL CONFORM TO THE CURRENT IOWA D.O.T. STANDARD AND SUPPLEMENTAL SPECIFICATIONS AND SPECIAL PROVISIONS.

CONDUIT INSTALLATION SHALL BE IN ACCORDANCE WITH ARTICLE 2523.03, N, OF THE STANDARD SPECIFICATIONS.

ALL "C" ENTRANCE HOLES IN JUNCTION BOXES SHALL BE DRILLED AND TAPPED FOR THE SPECIFIED CONDUIT SIZE. ALL OTHER HOLES SHALL HAVE A CONCRETE - TIGHT SLIP FIT. CONDUIT ENDS SHALL NOT PROTRUDE INTO JUNCTION BOX MORE THAN $\frac{1}{4}$". DRAIN PIPE END SHALL BE FLUSH WITH INSIDE SURFACE OF BOX. GROUNDING BUTTONS SHALL BE LOCATED APPROXIMATELY 3" FROM THE INSIDE SURFACE OF THE BOX WALL, AND NOT CLOSER THAN 3" TO THE EDGE OF ANY HOLE IN THE BOX FLOOR. HOLES FOR DRAIN PIPE SHALL BE PLACED IN THE LOW CORNER OF THE BOX, WITH A MINIMUM CLEARANCE OF 1" BETWEEN THE EDGE OF THE HOLE AND THE INSIDE SURFACE OF THE BOX WALL. TYPICAL DETAILS ARE SHOWN ON THIS SHEET.

THE RIGID STEEL CONDUIT, JUNCTION BOXES AND FITTINGS INCLUDING LABOR AND ANY ADDITIONAL WORK TO DO THE INSTALLATION IS CONSIDERED INCIDENTAL TO THE COST OF THE RAILING.

EXPANSION FITTING SHALL BE AS SPECIFIED OR AS APPROVED BY THE ENGINEER. TYPICAL DETAILS ARE SHOWN ON THIS SHEET.

STAINLESS-STEEL REINFORCEMENT SHALL NOT BE ALLOWED TO BE IN CONTACT WITH THE UNCOATED REINFORCEMENT, BARE METAL FORMING HARDWARE, OR TO GALVANIZED ATTACHMENTS OR GALVANIZED CONDUIT.

PROGRESS PLANS
6/10/2019

DESIGN FOR 0° SKEW
1097'-0 X 40'-0 PRETENSIONED PRESTRESSED CONCRETE BEAM W.B. BRIDGE
156'-0 END SPANS 157'-0 INTERIOR SPAN
CONDUIT DETAILS
IA 2 STA. 400+85.00, LT. 32.00' JUNE 2019
FREMONT COUNTY
IOWA DEPARTMENT OF TRANSPORTATION - HIGHWAY DIVISION
DESIGN SHEET NO. 43 OF ? FILE NO. 31719 DESIGN NO. 219

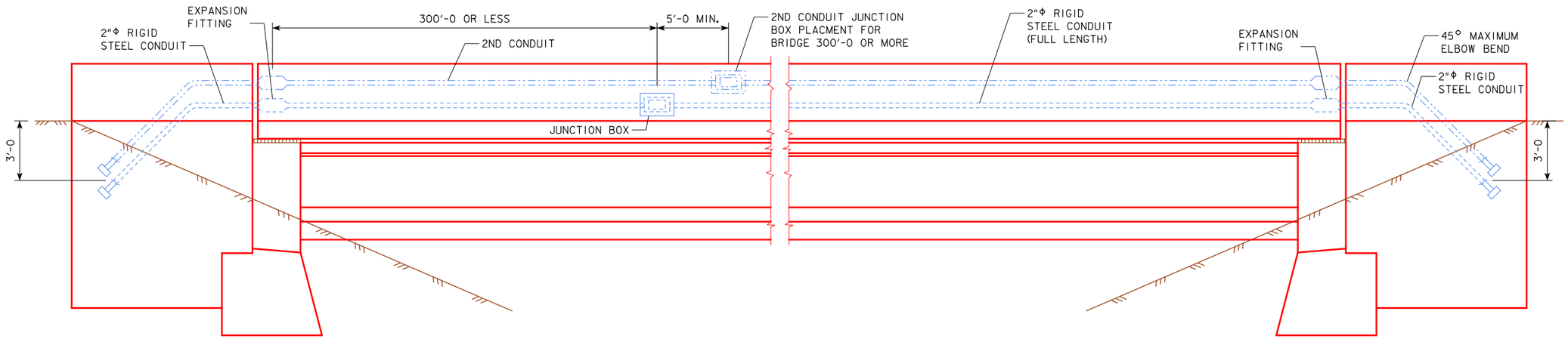

EXTERIOR BRIDGE BARRIER ELEVATION

SOUTH BARRIER RAIL, LOOKING NORTH

I.T.S CONDUIT NOTES:

I.T.S. CONDUIT SHALL BE LIMITED TO SIX 45° ELBOW BENDS FOR A CABLE PULL FROM HANDHOLE TO HANDHOLE.

RIGID STEEL CONDUIT FOR I.T.S. APPLICATIONS SHALL BE INSTALLED AND PREPARED TO FACILITATE INSTALLATION OF FIBER OPTIC CABLE.

THE MINIMUM INSIDE BEND RADIUS FOR RIGID STEEL CONDUIT USED FOR I.T.S. APPLICATIONS SHALL BE 18".

RIGID STEEL CONDUIT FOR I.T.S. APPLICATIONS SHALL BE CUT AND THREADED TO ELIMINATE EXPOSED THREADS AFTER COMPLETING THE CONNECTIONS; ALL COUPLINGS SHALL BE TIGHTENED UNTIL THE CONDUIT ENDS MEET TO ALLOW A CONTINUOUS INNER SURFACE THROUGHOUT THE ENTIRE LENGTH OF THE CONDUIT RUN. NIPPLES SHOULD BE USED TO ELIMINATE CUTTING AND THREADING SHORT LENGTHS OF CONDUIT.

ALL BURRS AND ROUGHENED SURFACES SHALL BE REMOVED FROM CONDUITS AND FITTINGS. ALL CONDUIT RUNS SHALL BE REAMED, CLEANED AND SWABBED FOR INSTALLATION OF FIBER OPTIC CABLE.

ONLY GALVANIZED FITTINGS SHALL BE USED WITH RIGID STEEL CONDUIT. DAMAGED GALVANIZED SURFACES OF RIGID STEEL CONDUIT OR FITTINGS SHALL BE PAINTED WITH AN ACCEPTABLE ZINC-RICH PAINT.

I.T.S. CONDUIT SHALL INCLUDE A POLYPROPYLENE PULL ROPE BETWEEN HANDHOLES WITH A MINIMUM 600 POUND TENSILE STRENGTH.

I.T.S. RIGID STEEL CONDUIT, PULL ROPES AND FITTINGS, INCLUDING LABOR AND ANY ADDITIONAL WORK FOR INSTALLATION IS CONSIDERED INCIDENTAL TO THE COST OF THE RAILING.

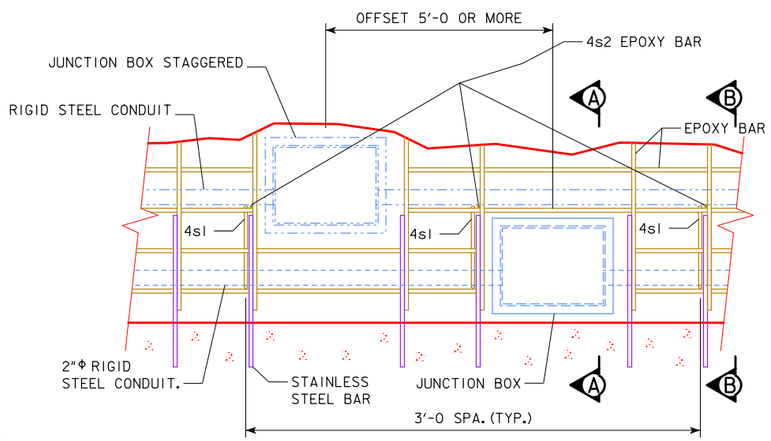

CONDUIT SUPPORT - RAIL ELEV. DETAIL

TWO JUNCTION BOX DETAIL - ADJUST REINFORCING TO CLEAR JUNCTION BOX. JUNCTION BOXES ARE TO BE PLACED NO FURTHER THAN 300'-0 APART.

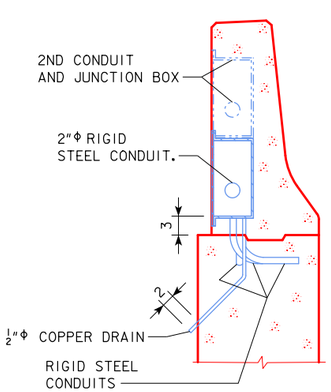

SECTION A-A THRU JUNCTION BOX

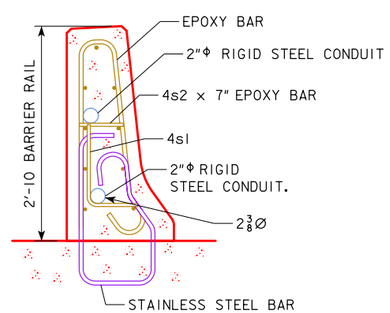

SECTION B-B - CONDUIT SUPPORT

ONLY USED IN RAIL WITH CONDUIT, USE 3'-0 SPACING. GALVANIZED CONDUIT SHALL NOT COME INTO CONTACT WITH THE STAINLESS STEEL REINFORCING. LOWER CONDUIT CAN ONLY BE 2" DIAMETER.

(377 REQUIRED)

EPOXY REINFORCING STEEL-ONE RAIL

BAR	LOCATION	SHAPE	NO.	LENGTH	WEIGHT
4s1	RAIL CONDUIT		377	1'-9	441
4s2	RAIL CONDUIT (OPTIONAL)		377	7	147
		TOTAL WEIGHT (LBS.)			588

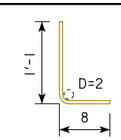

4s1

NOTE: ALL DIMENSIONS ARE OUT TO OUT. D = PIN DIAMETER.

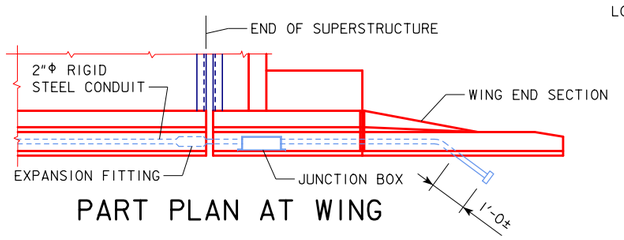

PART PLAN AT WING

PROGRESS PLANS
6/10/2019

DESIGN FOR 0° SKEW

1097'-0 X 40'-0 PRETENSIONED PRESTRESSED CONCRETE BEAM W.B. BRIDGE

156'-0 END SPANS 157'-0 INTERIOR SPAN

CONDUIT DETAILS

IA 2 STA. 400+85.00, LT. 32.00' JUNE 2019

FREMONT COUNTY

IOWA DEPARTMENT OF TRANSPORTATION - HIGHWAY DIVISION

DESIGN SHEET NO. 44 OF 2 FILE NO. 31719 DESIGN NO. 219

DESIGN TEAM Stanley Consultants Inc.	LIGHTING DETAILS (2 OF 2)	STANDARD SHEET 1030As2	FREMONT COUNTY	PROJECT NUMBER NHSX-002-1(123)--3H-36	SHEET NUMBER 101

BENCH MARK:

SUBDRAIN NOTES:

THIS PLAN SHEET SHOWS DETAILS FOR PLACING ALL SUBDRAINS AND SUBDRAIN OUTLETS REQUIRED FOR THIS STRUCTURE.

THE SUBDRAINS SHALL BE 4" IN DIAMETER AND SHALL BE IN ACCORDANCE WITH ARTICLE 4143.01, B, OF THE STANDARD SPECIFICATIONS.

THE SUBDRAIN OUTLET SHALL CONSIST OF A LENGTH OF PIPE WITH A REMOVABLE RODENT GUARD AS DETAILED ON THIS SHEET. THE LENGTH OF THE OUTLET PIPE SHALL BE DETERMINED BY THE REVETMENT AND IT'S PLACEMENT LOCATION. THE CONTRACTOR IS TO INSURE THE OUTLET PIPE IS ADEQUATELY STRONG ENOUGH AND WILL NOT BE DAMAGED WHEN REVETMENT IS PLACED. A CHECK WILL BE MADE AT THE SUBDRAIN OUTLET TO INSURE THAT THE SUBDRAIN IS NOT DAMAGED AND IS DRAINING PROPERLY DURING THE BACKFILL FLOODING PROCESS. IF A METAL OUTLET PIPE IS USED, IT SHALL BE 6 INCHES IN DIAMETER AND COUPLED TO THE 4 INCH DIAMETER SUBDRAIN IN ONE OF THE TWO FOLLOWING WAYS.

1. USE AN INSIDE FIT REDUCER COUPLER (COUPLER MUST BE INSERTED A MINIMUM OF 1'-0 INTO THE METAL OUTLET PIPE).
2. INSERT 1'-0 OF THE 4"Φ SUBDRAIN INTO THE 6"Φ METAL OUTLET PIPE, THEN FULLY SEAL THE ENTIRE OPENING WITH GROUT.

THE COST OF FURNISHING AND PLACING SUBDRAIN (INCLUDING EXCAVATION), GRANULAR BACKFILL, POROUS BACKFILL, AND SUBDRAIN OUTLET IS TO BE INCLUDED IN THE PRICE BID FOR "STRUCTURAL CONCRETE (BRIDGE)". NO EXTRA PAYMENT WILL BE MADE.

THE DIMENSIONS SHOWN FOR THE PROPOSED SUBDRAINS ARE BASED ON THE PROPOSED GRADING LAYOUT OF BRIDGE BERMS. THE DIMENSIONS SHOWN ARE FOR ESTIMATING ONLY. REQUIRED LENGTHS AND GENERAL LOCATIONS OF SUBDRAINS ARE SUBJECT TO CHANGE DUE TO FIELD ADJUSTMENTS OF THE GRADING LAYOUT.

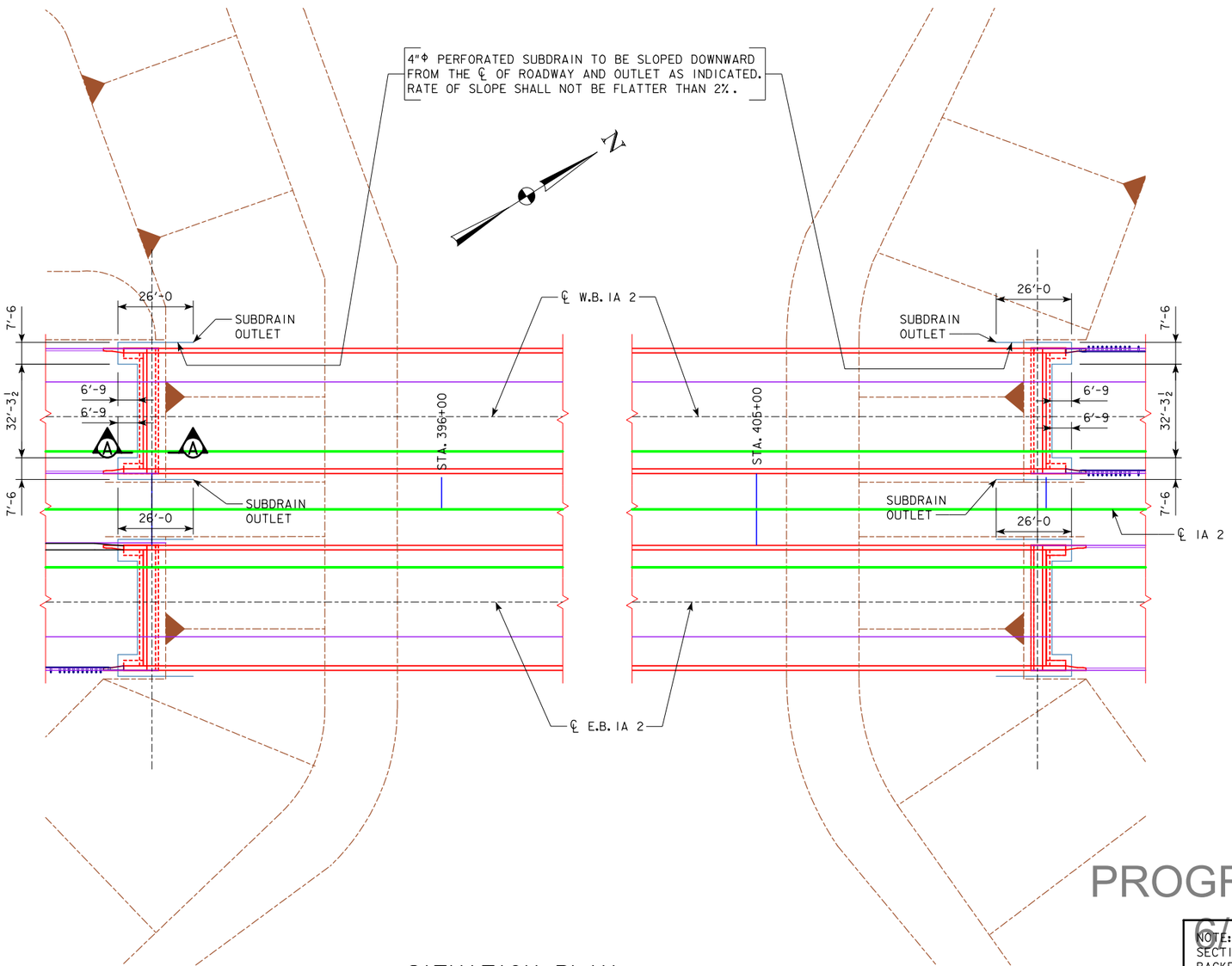

SITUATION PLAN

SHOWING SUBDRAIN LOCATIONS

SUBDRAIN OUTLET ELEVATIONS	
LOCATION	ELEVATION
WEST ABUTMENT	933.25
EAST ABUTMENT	933.94

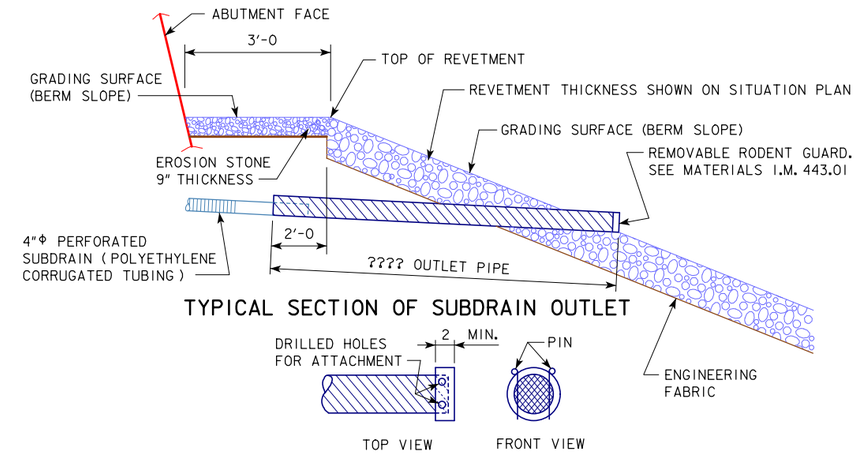

TYPICAL SECTION OF SUBDRAIN OUTLET

REMOVABLE RODENT GUARD DETAILS

REVETMENT STONE (EMBEDDED) OUTLET DETAILS

PROGRESS PLANS

6/10/2019

NOTE:
SECTION A-A IS SHOWN ON ABUTMENT BACKFILL DETAILS SHEET.

DESIGN FOR 0° SKEW

1097'-0 X 40'-0 PRETENSIONED PRESTRESSED CONCRETE BEAM W.B. BRIDGE

156'-0 END SPANS 157'-0 INTERIOR SPAN

SUBDRAIN DETAILS

IA 2 STA. 400+85.00, LT. 32.00' JUNE 2019

FREMONT COUNTY

IOWA DEPARTMENT OF TRANSPORTATION - HIGHWAY DIVISION

DESIGN SHEET NO. 45 OF ? FILE NO. 31719 DESIGN NO. 219

DESIGN TEAM Stanley Consultants Inc.	SUBDRAIN DETAILS (WATER CROSSING)	STANDARD SHEET 1007C	FREMONT COUNTY	PROJECT NUMBER NHSX-002-1(123)--3H-36	SHEET NUMBER 102

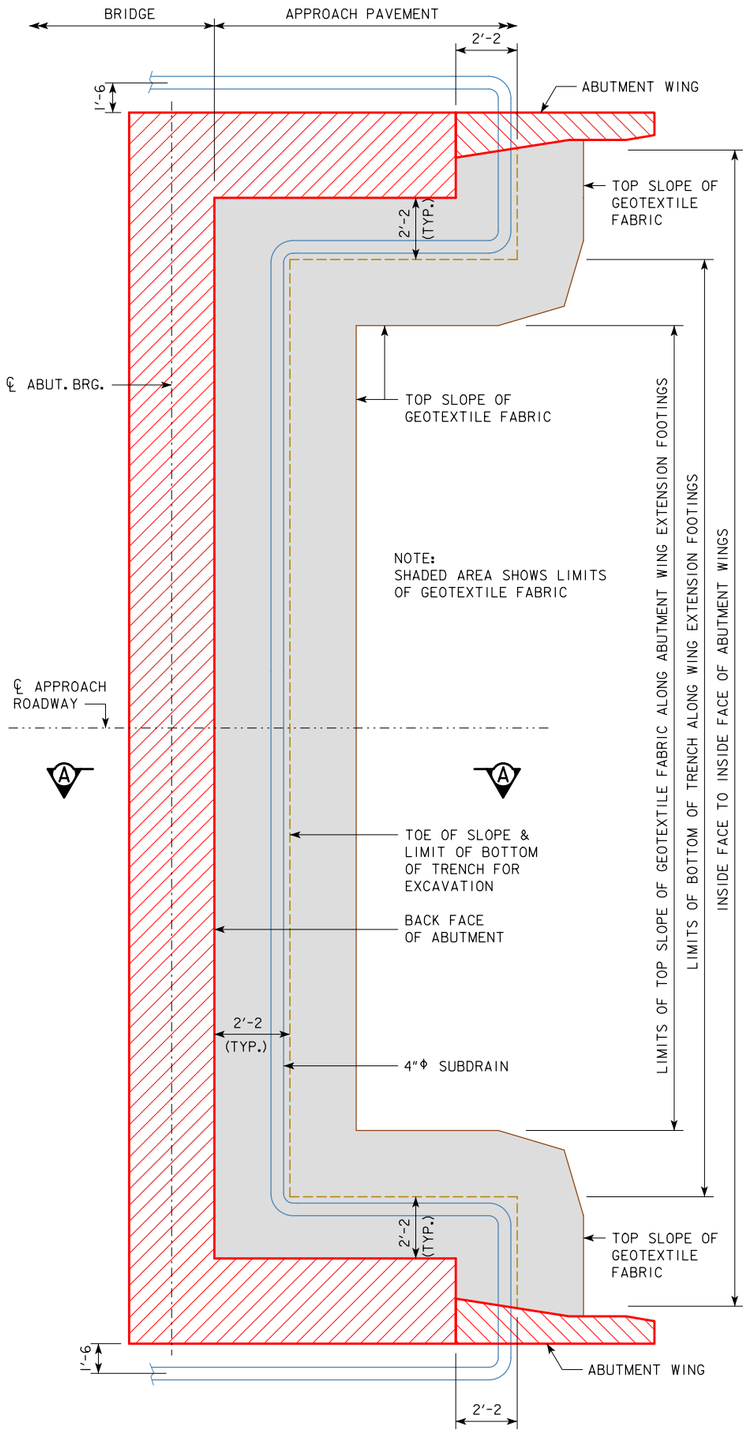

ABUTMENT PLAN WITH WING EXTENSIONS

ABUTMENT BACKFILL PROCESS:

THE BASE OF THE EXCAVATION SUBGRADE BEHIND THE ABUTMENT IS TO BE GRADED WITH A 4% SLOPE AWAY FROM THE ABUTMENT FOOTING AND A 2% CROSS SLOPE IN THE DIRECTION OF THE SUBDRAIN OUTLET. THIS EXCAVATION SHAPING IS TO BE DONE PRIOR TO BEGINNING INSTALLATION OF THE GEOTEXTILE AND BACKFILL MATERIAL.

AFTER THE SUBGRADE HAS BEEN SHAPED, THE GEOTEXTILE FABRIC SHALL BE INSTALLED IN ACCORDANCE WITH THE DETAILS SHOWN. THE FABRIC IS INTENDED TO BE INSTALLED IN THE BASE OF THE EXCAVATION AND EXTENDED VERTICALLY UP THE ABUTMENT BACKWALL, ABUTMENT WING WALLS, AND EXCAVATION FACE TO A HEIGHT THAT WILL BE APPROXIMATELY 1 TO 2 FOOT HIGHER THAN THE HEIGHT OF THE POROUS BACKFILL PLACEMENT AS SHOWN IN THE "BACKFILL DETAILS" ON THIS SHEET. THE STRIPS OF THE FABRIC PLACED SHALL OVERLAP APPROXIMATELY 1 FOOT AND SHALL BE PINNED IN PLACE. THE FABRIC SHALL BE ATTACHED TO THE ABUTMENT BY USING LATH FOLDED IN THE FABRIC AND SECURED TO THE CONCRETE WITH SHALLOW CONCRETE NAILS. THE FABRIC PLACED AGAINST THE EXCAVATION FACE SHALL BE PINNED.

WHEN THE FABRIC IS IN PLACE, THE SUBDRAIN SHALL BE INSTALLED DIRECTLY ON THE FABRIC AT THE TOE OF THE REAR EXCAVATION SLOPE. A SLOT WILL NEED TO BE CUT IN THE FABRIC AT THE POINT WHERE THE SUBDRAIN EXITS THE FABRIC NEAR THE END OF THE ABUTMENT WING WALL.

POROUS BACKFILL IS THEN PLACED AND LEVELED, NO COMPACTION IS REQUIRED.

THE REMAINING WORK INVOLVES BACKFILLING WITH FLOODABLE BACKFILL, SURFACE FLOODING, AND VIBRATORY COMPACTION. THE FLOODABLE BACKFILL MATERIAL SHALL BE IN ACCORDANCE WITH THE STANDARD SPECIFICATIONS. THE FLOODABLE BACKFILL SHALL BE PLACED IN INDIVIDUAL LIFTS, SURFACE FLOODED, AND COMPACTED WITH VIBRATORY COMPACTION TO ENSURE FULL CONSOLIDATION. LIMIT THE LOOSE LIFTS TO NO MORE THAN 2 FEET OF THICKNESS.

START SURFACE FLOODING FOR EACH FLOODABLE BACKFILL LIFT AT THE HIGH POINT OF THE SUBDRAIN AND PROGRESS TO THE LOW POINT WHERE THE SUBDRAIN EXITS THE FABRIC. TO ENSURE UNIFORM SURFACE FLOODING, WATER RUNNING FULL IN A 2-INCH DIAMETER HOSE SHOULD BE SPRAYED IN SUCCESSIVE 6-FOOT TO 8-FOOT INCREMENTS FOR 5 MINUTES WITHIN EACH INCREMENT.

FLOODABLE BACKFILL LIFT PLACEMENT, FLOODING, AND COMPACTION SHALL PROGRESS UNTIL THE REQUIRED FULL THICKNESS OF THE ABUTMENT BACKFILL HAS BEEN COMPLETED.

WATER REQUIRED FOR FLOODING, SUBDRAINS, POROUS BACKFILL, FLOODABLE BACKFILL, AND GEOTEXTILE FABRIC FURNISHED AT THE BRIDGE ABUTMENTS WILL NOT BE MEASURED SEPARATELY FOR PAYMENT.

THE COST OF WATER REQUIRED FOR FLOODING, SUBDRAINS, POROUS BACKFILL, FLOODABLE BACKFILL, AND GEOTEXTILE FABRIC FURNISHED AT THE BRIDGE ABUTMENTS SHALL BE INCLUDED IN THE CONTRACT UNIT PRICE BID FOR STRUCTURAL CONCRETE.

NOTE:

SUBDRAIN SHALL SLOPE DOWNWARD 2% FROM ℄ APPROACH ROADWAY WHEN OUTLETTING BOTH SIDES OF THE ABUTMENT.

THE GEOTEXTILE FABRIC SHALL BE IN ACCORDANCE WITH ARTICLE 4196.01, B, 6 OF THE STANDARD SPECIFICATIONS. IF THE ENGINEERING FABRIC IS LAPPED THE LAPS SHALL BE A MINIMUM OF ONE FOOT IN LENGTH, SHINGLE FASHION WITH UP SLOPE LAP PIECE ON TOP AND STAPLED FOR CONTINUITY.

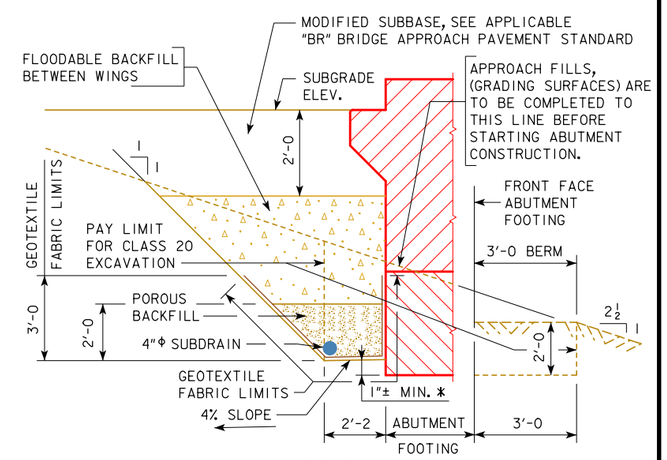

SECTION A-A

BACKFILL DETAILS

NOTE: GEOTEXTILE FABRIC WILL BE ATTACHED TO FACE OF ABUTMENT FOOTING AND WINGS.

* DIMENSION VARIES DUE TO 2% SUBDRAIN SLOPE.

PROGRESS PLANS
6/10/2019

NOTE:
SEE SUBDRAIN DETAILS SHEET FOR DETAILS NOT SHOWN ON THIS SHEET WHICH ARE PERTINENT TO THIS STRUCTURE.

DESIGN FOR 0° SKEW

1097'-0 X 40'-0 PRETENSIONED PRESTRESSED CONCRETE BEAM W.B. BRIDGE

156'-0 END SPANS — 157'-0 INTERIOR SPAN

ABUTMENT BACKFILL DETAILS

IA 2 STA. 400+85.00, LT. 32.00' — JUNE 2019

FREMONT COUNTY

IOWA DEPARTMENT OF TRANSPORTATION - HIGHWAY DIVISION

DESIGN SHEET NO. 46 OF ? FILE NO. 31719 DESIGN NO. 219

DESIGN TEAM Stanley Consultants Inc.	ABUTMENT BACKFILL DETAILS (WING EXTENSION ABUTMENTS)	STANDARD SHEET 1007E	FREMONT COUNTY	PROJECT NUMBER NHSX-002-1(123)--3H-36	SHEET NUMBER 103

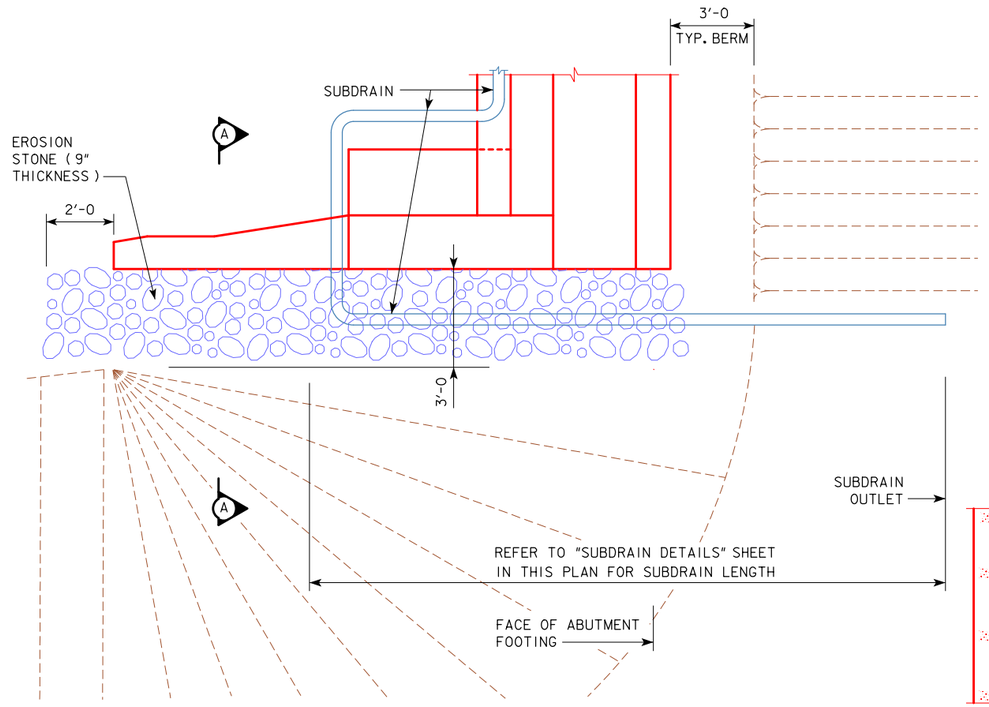

TOP VIEW OF WING ARMORING WITH WING EXTENSION

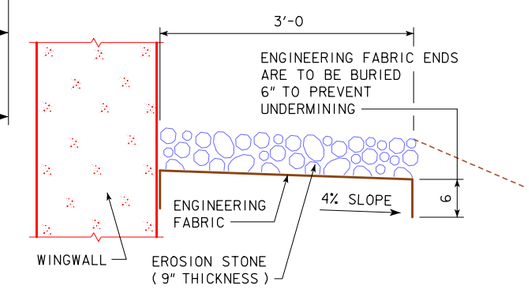

SECTION A-A

GENERAL NOTES:

EROSION STONE SHALL BE PLACED ALONG THE SIDES OF THE WINGS AND ABUTMENT FOOTING AS SHOWN IN SECTION A-A. THIS IS TYPICAL AT EACH CORNER OF THE BRIDGE UNLESS OTHERWISE NOTED IN THE PLANS. THE EROSION STONE AT THESE LOCATIONS SHALL BE UNDERLAYED WITH ENGINEERING FABRIC IN ACCORDANCE WITH ARTICLE 4196.01, B, 3, OF THE STANDARD SPECIFICATIONS.

THE EROSION STONE SHALL BE IN ACCORDANCE WITH SECTION 4130, OF THE STANDARD SPECIFICATIONS. MATERIAL PASSING THE 3 INCH SCREEEN BUT 100% RETAINED ON A 1 INCH SCREEN MAY BE USED AS CHOKE STONE.

THE EROSION STONE SHALL BE DEPOSITED, SPREAD, CONSOLIDATED AND SHAPED BY MECHANICAL OR HAND METHODS THAT WILL PROVIDE UNIFORM 9" DEPTH AND DENSITY AND PROVIDE UNIFORM SURFACE APPEARANCE.

PAYMENT FOR THE BRIDGE WING ARMORING WILL BE BID PER SQUARE YARD. COST WILL INCLUDE ENGINEERING FABRIC, EROSION STONE, EXCAVATION, SHAPING, AND COMPACTION TO DIMENSIONS SHOWN IN THESE PLANS. BID ITEM SHALL BE "BRIDGE WING ARMORING - EROSION STONE".

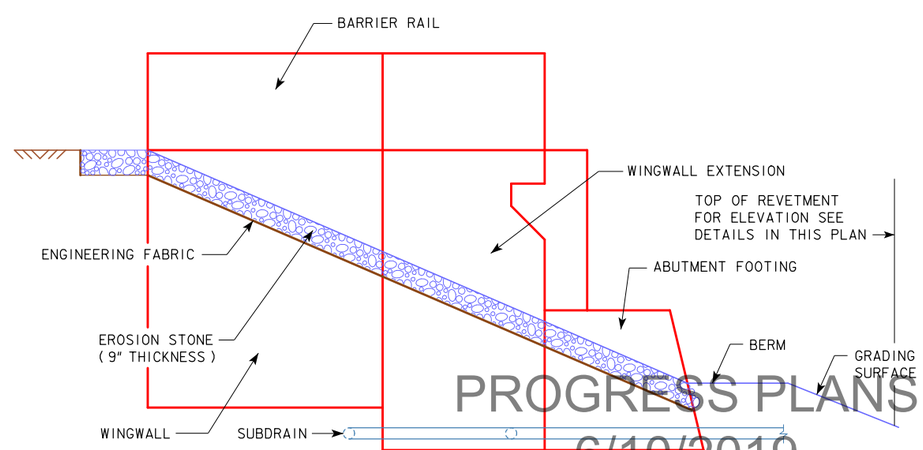

PROGRESS PLANS
6/10/2019

PROFILE VIEW OF WING ARMORING WITH WING EXTENSION

(STUB ABUTMENT WITH WING EXTENSIONS)

DESIGN FOR 0° SKEW

1097'-0 X 40'-0 PRETENSIONED PRESTRESSED CONCRETE BEAM W.B. BRIDGE

156'-0 END SPANS 157'-0 INTERIOR SPAN

BRIDGE WING ARMORING

IA 2 STA. 400+85.00, LT. 32.00' JUNE 2019

FREMONT COUNTY

IOWA DEPARTMENT OF TRANSPORTATION - HIGHWAY DIVISION

DESIGN SHEET NO. 47 OF ? FILE NO. 31719 DESIGN NO. 219

DESIGN TEAM Stanley Consultants Inc.	BRIDGE WING ARMORING - WATER CROSSING	STANDARD SHEET 1005A	FREMONT COUNTY	PROJECT NUMBER NHSX-002-1(123)--3H-36	SHEET NUMBER 104

100-1A
07-15-97

ESTIMATED PROJECT QUANTITIES
(1 DIVISION PROJECT)

Item No.	Item Code	Item	Unit	Total	As Built Qty.
1	2301-0690203	BRIDGE APPROACH, BR-203	SY	1,606.2	
2	2412-0000100	LONGITUDINAL GROOVING IN CONCRETE	SY	10,584.7	

100-4A
10-29-02

ESTIMATE REFERENCE INFORMATION

Item No.	Item Code	Description
1	**2301-0690203**	**BRIDGE APPROACH, BR-203**
		See Tab. 112-6 in the C sheets and the U sheets for locations and details.
-	-	-
2	**2412-0000100**	**LONGITUDINAL GROOVING IN CONCRETE**
		See Tab. 100-28 in the C sheets for locations and details.
-	-	-

105-4
10-18-11

STANDARD ROAD PLANS

The following Standard Road Plans apply to construction work on this project.

Number	Date	Title
BR-203	10-17-17	Double Reinforced 12" Approach

111-25
10-18-11

INDEX OF TABULATIONS

Tabulation	Tabulation Title	Sheet No.
C Sheets		
112-6	BRIDGE APPROACH SECTION	C.2
100-28	LONGITUDINAL GROOVING	C.2
100-1A	ESTIMATED PROJECT QUANTITIES (1 DIVISION PROJECT)	C.1
100-4A	ESTIMATE REFERENCE INFORMATION	C.1
105-4	STANDARD ROAD PLANS	C.1
111-25	INDEX OF TABULATIONS	C.1

PROGRESS PLANS
6/10/2019

ROADWAY DESIGN

LICENSED PROFESSIONAL ENGINEER
Paul W. Flattery
15282
IOWA

I hereby certify that this engineering document was prepared by me or under my direct personal supervision and that I am a duly licensed Professional Engineer under the laws of the State of Iowa.

Signature: Paul Flattery — Date: 6/10/2019

Printed or Typed Name: Paul W. Flattery

My license renewal date is December 31, 2019

Pages or sheets covered by this seal: C.1-C.2, U.1-U.5

BRIDGE APPROACH SECTION

Refer to the BR Series.

* Not a bid item

Location				Approach Pavement					Standard Road Plans BR Series			Subdrain					*	*	*	
Bridge Station	End	Skew Ahead Degrees		(T) Thickness	Pay Length	Non-Reinf. Pavement Area	Single-Reinf. Pavement Area	Double-Reinf. Pavement Area	Approach	Fixed or Movable Abutment	Abutting Pavement	* Perforated Subdrain 4"	* Subdrain Outlet		* Porous Backfill	* Class 'A' Crushed Stone Backfill	Modified Subbase	Polymer Grid	Special Backfill	Remarks
		LEFT	RIGHT	Inches	FT	SY	SY	SY				LF	STA	Side	CY	CY	TON	SY	TON	
376+11.5(EB)	East	--	--	12.0	70.0	80.0	53.4	68.3	BR-203	Movable	PCC	44.0	386+18.00	Right	1.2	0.2	210.400	239.0		See U sheets for modified BR-231
376+11.5(WB)	East	--	--	12.0	70.0	80.0	53.4	68.3	BR-203	Movable	PCC	44.0	386+18.00	Left	1.2	0.2	210.400	239.0		See U sheets for modified BR-231
400+48.5(EB)	West	--	--	12.0	67.0	120.0	88.9	91.8	BR-203M	Movable	PCC	52.0	394+40.00	Left	1.5	0.2	287.100	334.4		See U sheets for modified BR-203 & BR-211
400+48.5(EB)	East	--	--	12.0	67.0	120.0	88.9	91.8	BR-203M	Movable	PCC	52.0	406+57.00	Right	1.5	0.2	287.100	334.4		See U sheets for modified BR-203 & BR-211
400+48.5(WB)	West	--	--	12.0	67.0	120.0	88.9	91.8	BR-203M	Movable	PCC	52.0	394+40.00	Left	1.5	0.2	287.100	334.4		See U sheets for modified BR-203 & BR-211
400+48.5(WB)	East	--	--	12.0	67.0	120.0	88.9	91.8	BR-203M	Movable	PCC	52.0	406+57.00	Right	1.5	0.2	287.100	334.4		See U sheets for modified BR-203 & BR-211
TOTALS:						640.0	462.4	503.8				296.0			8.4	1.2	1569.200	1815.6		
GRAND TOTAL:							**1606.2**													

LONGITUDINAL GROOVING

Location	Total SY	Remarks
376+11.50	210.0	EB Lanes, East Approach
376+11.50	210.0	WB Lanes, East Approach
400+48.50	290.3	WB Lanes, West Approach
400+48.50	4,501.7	Bridge
400+48.50	290.3	WB Lanes, East Approach
400+48.50	290.3	EB Lanes, West Approach
400+48.50	4,501.7	Bridge
400+48.50	290.3	EB Lanes, East Approach
TOTAL:	**10,584.7**	

PROGRESS PLANS
6/10/2019

For joint details, see PV-101.

1. Build 4 inch Sloped Curb to end of Double Reinforced Section.
2. See BR-201, BR-202, BR-203M, or BR-204.
3. Longitudinal Joint (PV-101):
   Single Pour - Saw cut joint per Detail B .
   Two Pours - Use 'KS-1' joint (Single Reinforced Section).
   Use 'KS-2' joint (Double Reinforced Section).
4. Extend 'CD' and 'EF' joints where PCC Shoulder.
5. Polymer Grid and excavation limits of Modified Subbase 2 feet outside of pavement edge. See BR-201, BR-202, BR-203M, or BR-204.
6. Slope subdrain to drain.
7. Place an "X" in the plastic concrete near the 'EF' joint at the outside edge of pavement.
8. Place 'RD' Joint where PCC shoulder. Place 'B' joint otherwise.

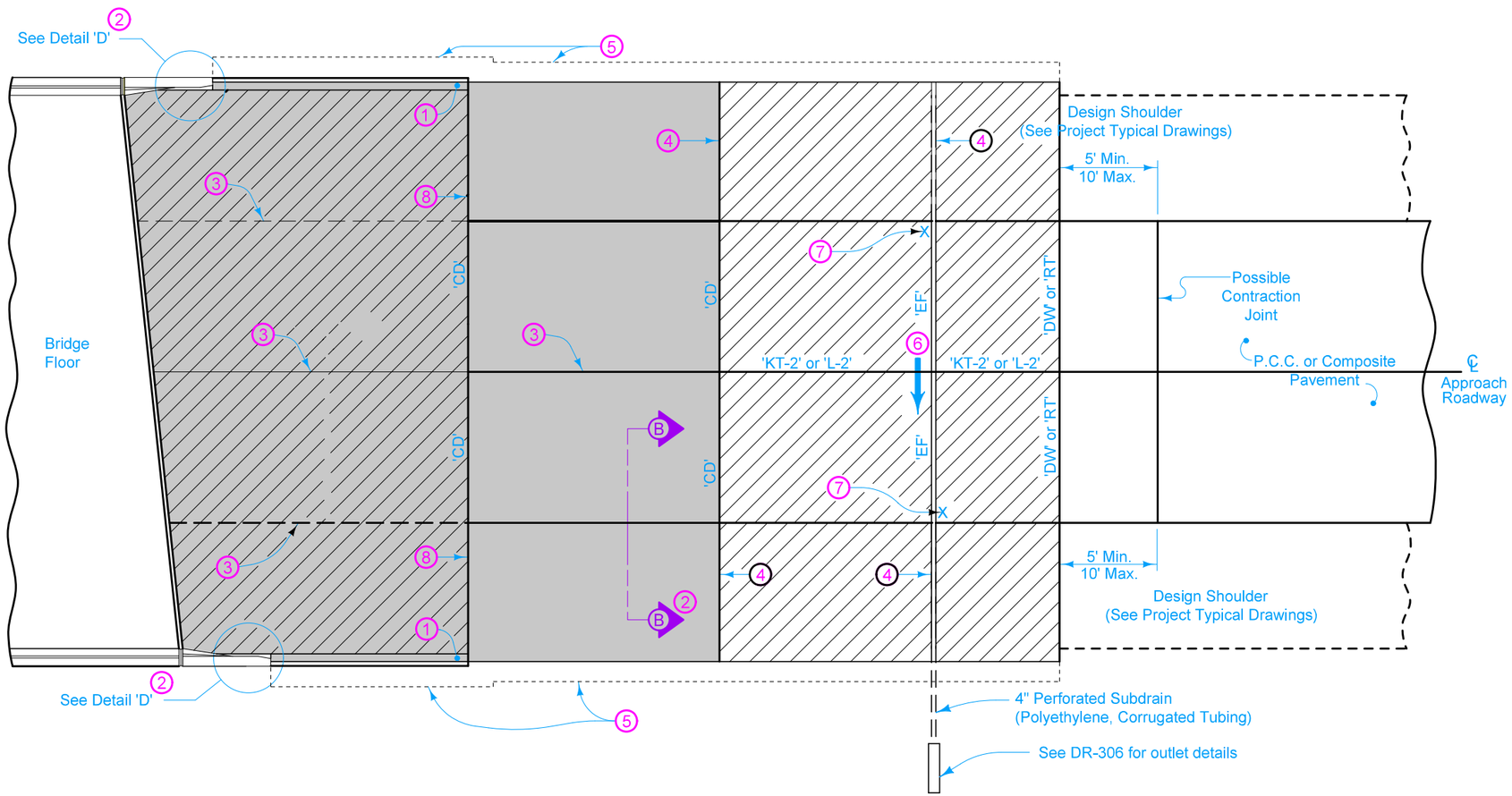

PLAN VIEW

Pay limits for contract item include the following areas:

- Double Reinforced Section
- Single Reinforced Section
- Non-Reinforced Section

PROGRESS PLANS
6/10/2019

MODIFIED
STANDARD ROAD PLAN

BR-211M
SHEET 1 of 1

BRIDGE APPROACH
IA 2 OVERFLOW BRIDGES

FILE NO.	ENGLISH	DESIGN TEAM Flattery \ Bell	FREMONT COUNTY	PROJECT NUMBER NHSX-002-1(123)--3H-36	SHEET NUMBER U.1

4:09:09 PM 6/10/2019 pflatte pw:\\ntPwInt1.dot.int.lan:PWMain\Documents\Projects\3600207019\Design\(123)_Bridge-Unspecified\36002123_U01.dgn

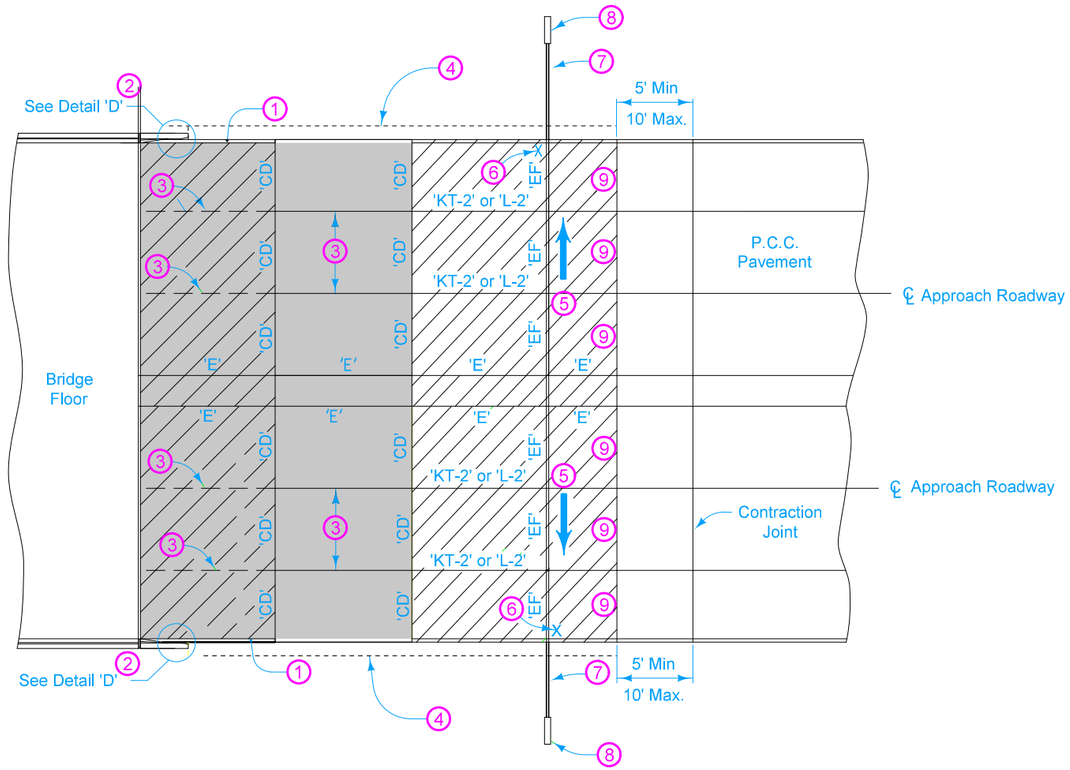

PLAN

For joint details, see PV-101.

1. Build 4 inch Sloped Curb, unless noted otherwise in the plans.
2. See BR-201, BR-202, BR-203, or BR-204.
3. Longitudinal Joint (PV-101):
   Single Pour - Saw cut joint per Detail B .
   Two Pours - Use 'KS-1' joint (Single Reinforced Section).
   Use 'KS-2' joint (Double Reinforced Section).
4. Polymer Grid and excavation limits of Modified Subbase 2 feet outside of pavement edge. See BR-201, BR-202,BR-203, or BR-204.
5. Slope subdrain to drain.
6. Place an "X" in the plastic concrete near the 'EF' joint at the outside edge of pavement.
7. 4 inch perforated subdrain (polyetheylene, corrugated tubing).
8. See DR-303 or DR-306 for outlet details
9. 'DW' or 'RT' joint.

Pay limits for contract item include the following areas:

- Double Reinforced Section
- Single Reinforced Section
- Non-Reinforced Section

PROGRESS PLANS
6/10/2019

MODIFIED
STANDARD ROAD PLAN

BR-231M
SHEET 1 of 1

BRIDGE APPROACH
IA 2 MISSOURI RIVER BRIDGE

FILE NO.	ENGLISH	DESIGN TEAM Flattery \ Bell	FREMONT COUNTY	PROJECT NUMBER NHSX-002-1(123)--3H-36	SHEET NUMBER U.2

4:09:10 PM 6/10/2019 pflatte pw:\\ntPwInt1.dot.int.lan:PWMain\Documents\Projects\3600207019\Design\(123)_Bridge-Unspecified\36002123_U01.dgn

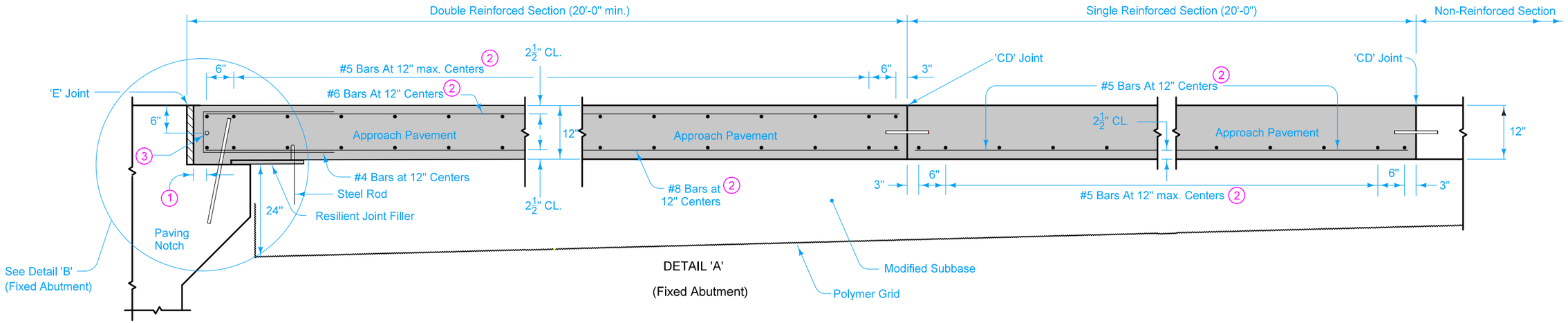

DETAIL 'A'

(Fixed Abutment)

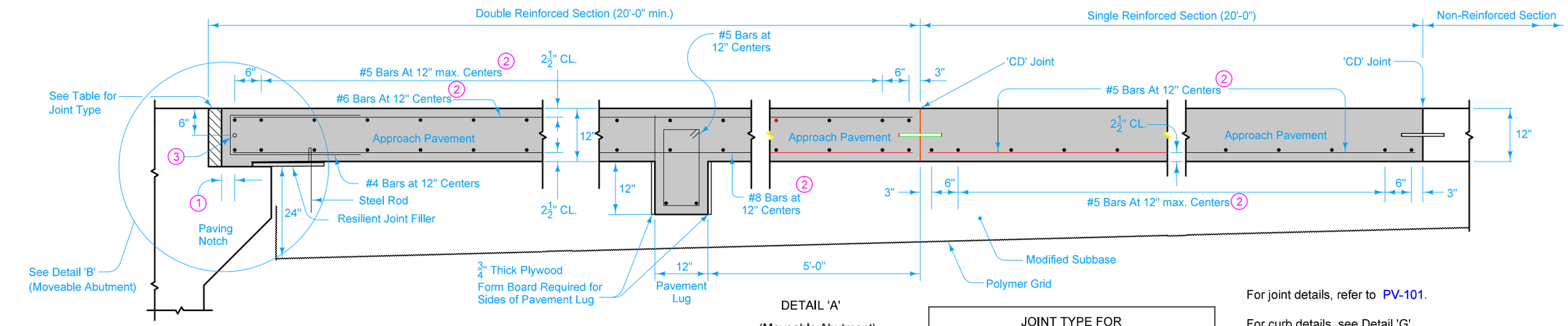

DETAIL 'A'

(Moveable Abutment)

For joint details, refer to PV-101.

For curb details, see Detail 'G'.

All transverse bars are #5.

Possible Contract Item:
Bridge Approach, BR-203

Possible Tabulation:
112-6

JOINT TYPE FOR MOVEABLE ABUTMENT BRIDGES		
	Maximum Bridge Length	
Joint	Concrete Beam or Slab	Steel Girder
CF-1	370'	250'
CF-2	465'	320'
CF-3	575'	400'

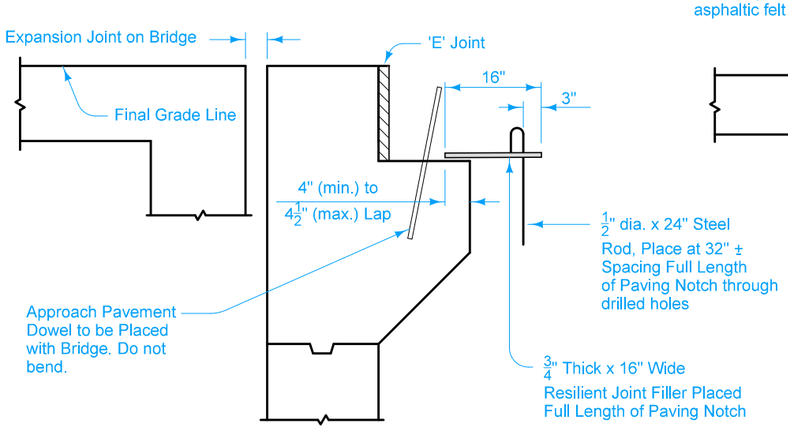

DETAIL 'B' (Fixed Abutment)

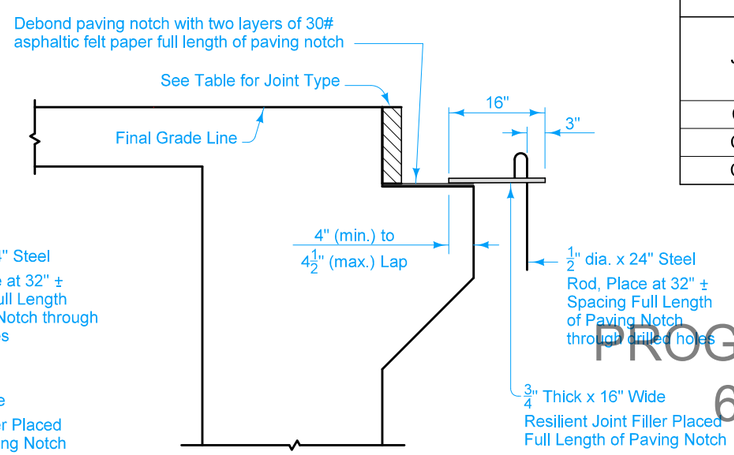

DETAIL 'B' (Moveable Abutment)

(1) 2" min. to 2 1/2" max. clear to bent bar.

(2) Minimum lap length: #5 Bars - 18"
#6 Bars - 27"
#8 Bars - 48"

(3) If bridge is skewed, place additional #5 bar parallel to skewed face.

PROGRESS PLANS
6/10/2019

MODIFIED STANDARD ROAD PLAN

BR-203M

SHEET 1 of 3

DOUBLE REINFORCED 12" APPROACH IA 2 OVERFLOW BRIDGES

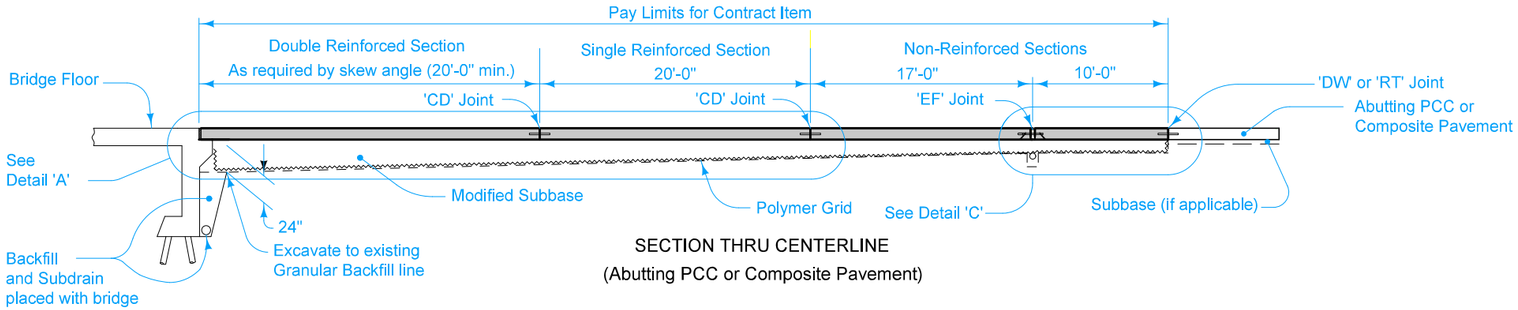

SECTION THRU CENTERLINE
(Abutting PCC or Composite Pavement)

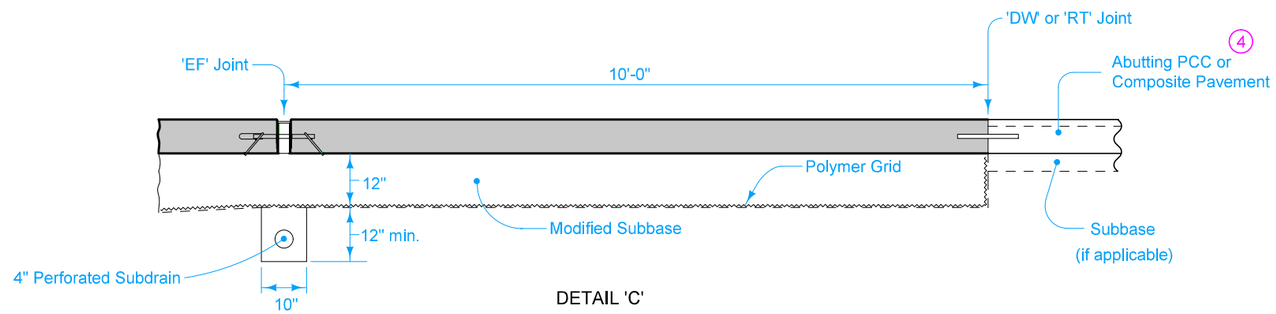

DETAIL 'C'
(Doweled PCC Pavement)

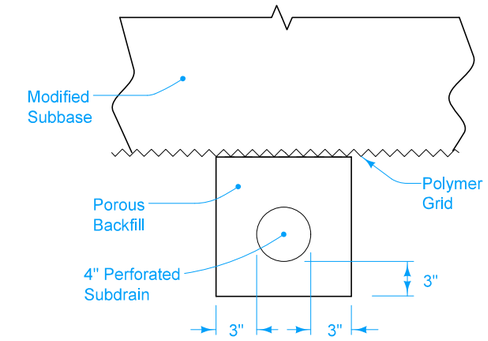

4" SUBDRAIN LOCATION

4 If abutting pavement (PCC or HMA) is not in place, refer to BR-213.

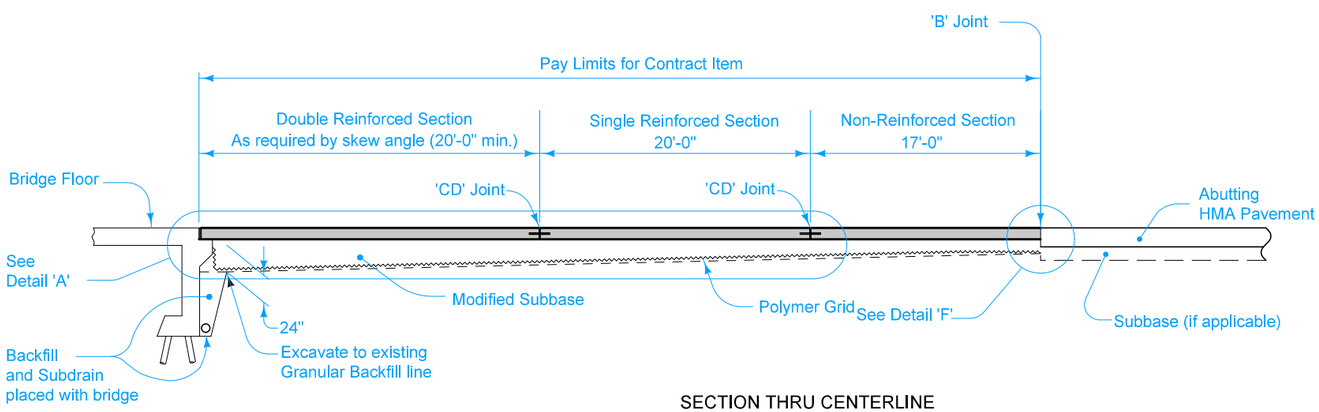

SECTION THRU CENTERLINE
(Abutting HMA Pavement)

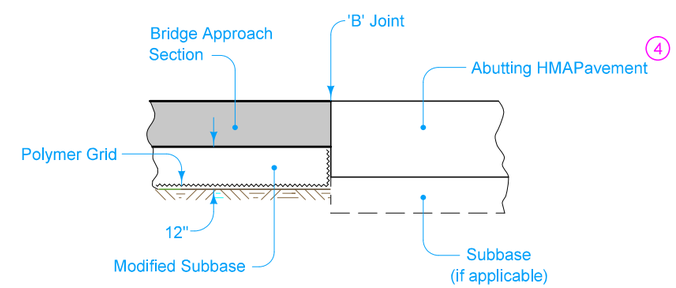

DETAIL 'F'

PROGRESS PLANS
6/10/2019

MODIFIED
STANDARD ROAD PLAN

BR-203M
SHEET 2 of 3

DOUBLE REINFORCED 12" APPROACH
IA 2 OVERFLOW BRIDGES

FILE NO.	ENGLISH	DESIGN TEAM Flattery \ Bell	FREMONT COUNTY	PROJECT NUMBER NHSX-002-1(123)--3H-36	SHEET NUMBER U.4

4:09:13 PM 6/10/2019 pflatte pw:\\ntPwInt1.dot.int.lan:PWMain\Documents\Projects\3600207019\Design\(123)_Bridge-Unspecified\36002123_U01.dgn

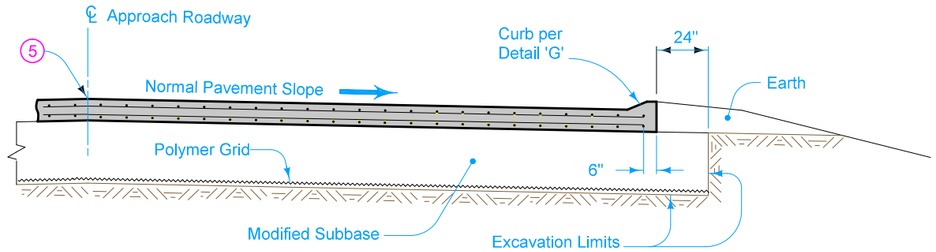

SECTION A-A 6

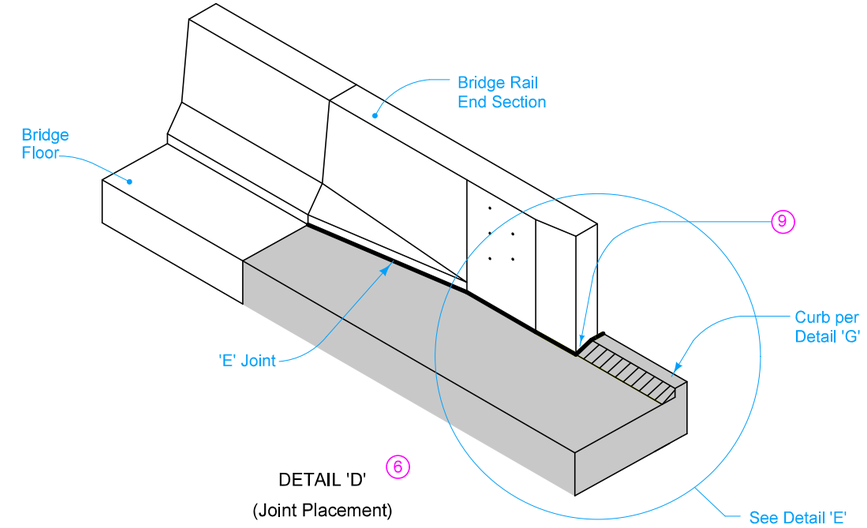

DETAIL 'D' 6
(Joint Placement)

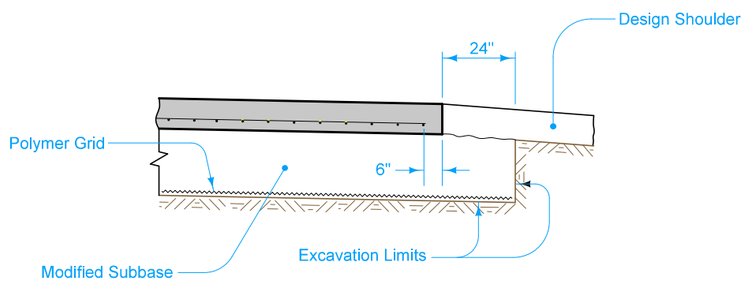

SECTION B-B 6

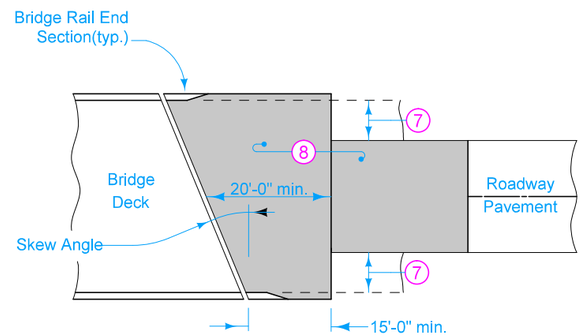

APPROACH PAVEMENT
LAYOUT AT A SKEW

5 Longitudinal Joint (PV-101):
Single pour - Saw cut joint per Detail B.
Two pours - Use 'KS-2' joint.

6 Refer to BR-211M, BR-212, or BR-231.

7 Design shoulder width.

8 Reinforced bridge approach section.

9 Expansion joint at end of Bridge Rail End Section: Place joint filler the full depth of the bridge approach pavement. In areas with curb, place full depth of pavement plus curb and shape material to fit the shape of the curb per Section B-B of PV-101. Seal joint per Detail F of PV-101.

- Fixed Abutment Bridges: Type 'E' joint.
- Moveable Abutment Bridges: Flexible Foam Expansion Joint Filler complying with Section 4136 of the Standard Specifications. Minimum filler width is the abutment 'CF' joint width. Joint length as required to completely fill from back side of curb to front face of bridge wing.

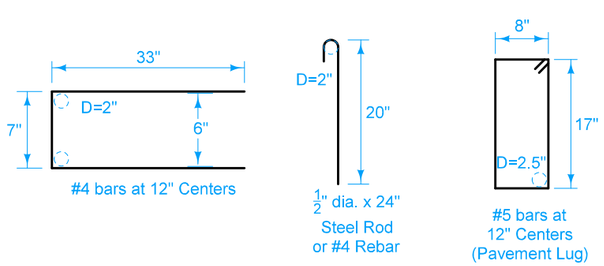

BENT BAR SHAPES

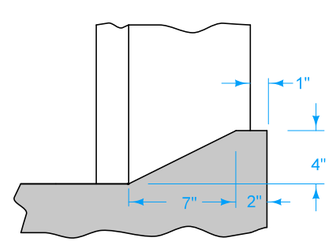

DETAIL 'G'

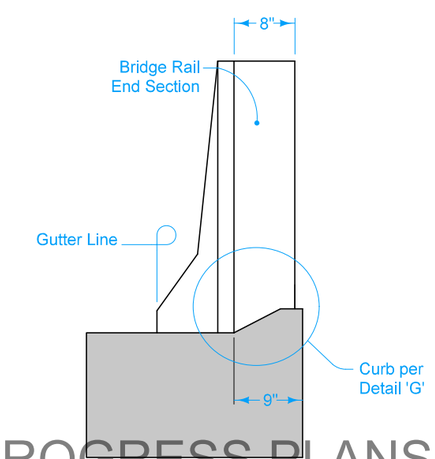

DETAIL 'E'
(Back of Curb Placement)

PROGRESS PLANS
6/10/2019

MODIFIED STANDARD ROAD PLAN

REVISION 1

BR-203M

SHEET 3 of 3

REVISIONS:

APPROVED BY DESIGN METHODS ENGINEER

DOUBLE REINFORCED 12" APPROACH IA 2 OVERFLOW BRIDGES