BRIDGE REPLACEMENT - PPCB
LETTING DATE
Nov. 19, 2019

TAP-R-C007(154)--8T-07

BLACK HAWK COUNTY

U.S. ARMY CORPS OF ENGINEERS SECTION 404 PERMIT AND CONDITIONS
CONSTRUCT THIS PROJECT ACCORDING TO THE REQUIREMENTS OF U.S. ARMY CORPS OF ENGINEERS NATIONWIDE PERMIT NO. 14.
REFERENCE NO. CEMVR-OD-P-2018-22.
A COPY OF THIS PERMIT IS AVAILABLE FROM THE IOWA DOT WEBSITE (http://www.envpermits.iowadot.gov/).
THE U.S. ARMY CORPS OF ENGINEERS RESERVES THE RIGHT TO VISIT THE SITE WITHOUT PRIOR NOTICE.

IOWA DNR FLOODPLAIN CONSTRUCTION PERMIT
THIS PROJECT IS COVERED BY THE IOWA DEPARTMENT OF NATURAL RESOURCES FLOODPLAIN CONSTRUCTION PERMIT NO. FP-2018-126

LAPORTE CITY FLOODPLAIN DEVELOPMENT PERMIT
THIS PROJECT IS COVERED BY THE LAPORTE CITY LOCAL FLOODPLAIN CONSTRUCTION PERMIT NO. 2018-126

IOWA DOT

Planning, Programming and Modal Division

PLANS OF PROPOSED IMPROVEMENTS ON THE

TRAIL SYSTEM

BLACK HAWK COUNTY

TAP-R-C007(154)--8T-07

BRIDGE REPLACEMENT - PPCB

ON CEDAR VALLEY NATURE TRAIL,
REPLACE BRIDGE L3 OVER WOLF CREEK

SCALES: As Noted

REFER TO THE PROPOSAL FORM FOR LIST OF APPLICABLE SPECIFICATIONS.

SEE SHEET C.2 FOR STANDARD ROAD PLAN TABULATION.

TOTAL SHEETS
23

PROJECT NUMBER
TAP-R-C007(154)--8T-07

INDEX OF SHEETS

105-3
10-18-05

NO.	DESCRIPTION
A.1 – A.2	TITLE SHEET, LEGENDS AND ABBREVIATIONS
B.1	TYPICAL SECTIONS
C.1 – C.2	ESTIMATE OF QUANTITIES, STANDARD ROAD PLANS, & GENERAL INFORMATION
D.1	PLAN & PROFILES
SPS.1 – SPS.2	SOIL BORINGS
V.1 – V.13	SITUATION PLAN AND STRUCTURE DETAILS
W.1 – W.2	CROSS SECTIONS (MAINLINE)

MILEAGE SUMMARY

105-1
09-27-94

DIV.	LOCATION	LIN. FT.	MILES
1	CEDAR VALLEY NATURE TRAIL STA 8+25 TO 13+00	475.0	0.09
	TOTAL	475.0	0.09

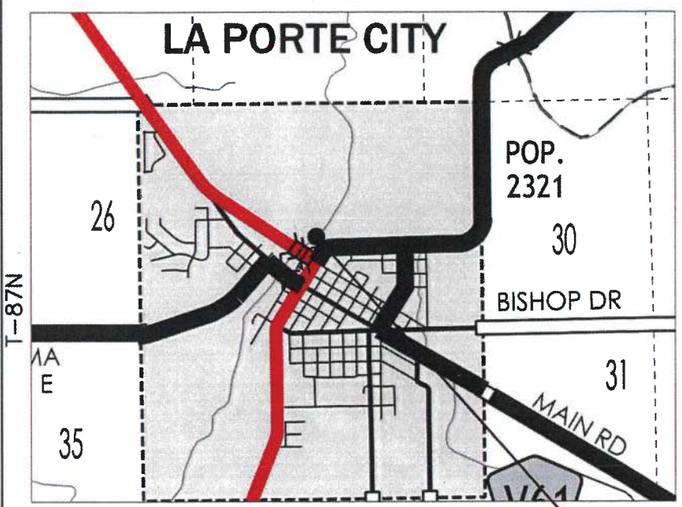

B.O.P. STATION 8+25
E.O.P. STATION 13+00

TRAFFIC CONTROL PLAN
THIS TRAIL SHALL BE CLOSED TO VEHICULAR AND PEDESTRIAN TRAFFIC DURING CONSTRUCTION. ALL TRAFFIC CONTROL DEVICES, PROCEDURES, AND LAYOUTS WITHIN THE LIMITS OF THIS PROJECT SHALL CONFORM TO THE "MANUAL ON UNIFORM TRAFFIC CONTROL DEVICES FOR STREETS AND HIGHWAYS, (MUTCD) AS ADOPTED BY THE DEPARTMENT PER 761 OF THE IOWA ADMINISTRATIVE CODE (IAC), CHAPTER 130." THE CONTRACTOR SHALL FURNISH TRAFFIC CONTROL INCLUDING BARRICADES AND SIGNS IN ACCORDANCE WITH TC-252 AND THE MUTCD. CONTRACTOR SHALL FURNISH, ERECT AND MAINTAIN ALL NECESSARY TRAFFIC CONTROL DEVICES ON A 24 HOUR PER DAY, 7 DAYS A WEEK BASIS DURING THE CONSTRUCTION PERIOD. CONTRACTOR TO PROVIDE 24 HOUR CALL NUMBER FOR REPAIR OF DEFICIENCIES.

IOWA 811 ONE CALL℠
1 (800) 292 - 8989

UTILITY CONTACTS:

BLACK HILLS ENERGY
JOE MCAREAVY
(515) 343-2030
joe.mcareavy@blackhillscorp.com

CENTURY LINK
2103 EAST UNIVERSITY
DES MOINES, IA 50317
TOMMY BROWER
o: (515) 263-2162
c: (641) 682-9455
tommy.brower@centurylink.com

LA PORTE CITY TELEPHONE COMPANY
DAVID POWELL
o: (319) 342-3369
c: (319) 290-4973
lpctelco@lpctel.net

LA PORTE CITY UTILITIES
403 MAIN STREET
LA PORTE CITY, IA 506551
MIKE JOHNSON
(319) 342-3139
mjohnsonlpcutil@hotmail.com

MEDIACOM
124 WEST 4TH STREET
CEDAR FALLS, IA 53017
KEVIN PARKER
o: (845) 868-0932
c: (319) 240-4987
kparker@mediacomcc.com

LOCATION MAP

WORKING DRAWINGS WILL BE CHECKED BY IIW, P.C.
4155 PENNSYLVANIA AVE., DUBUQUE, IA 52002 (563) 556-2464 c.wand@iiwengr.com

IIW, P.C.
iiw
ARCHITECTURE
CIVIL ENGINEERING
CONSTRUCTION SERVICES
ENVIRONMENTAL ENGINEERING
LAND SURVEYING
MUNICIPAL ENGINEERING
STRUCTURAL ENGINEERING
TRANSPORTATION ENGINEERING
INTEGRITY.EXPERTISE.SOLUTIONS
www.iiwengr.com • 800.526.4291

APPROVED
Mike Hudnutson 8/13/19
BLACK HAWK COUNTY CONSERVATION BOARD DATE

LICENSED PROFESSIONAL ENGINEER
COURTNEY E. WAND
23810
IOWA

I HEREBY CERTIFY THAT THIS ENGINEERING DOCUMENT WAS PREPARED BY ME OR UNDER MY DIRECT PERSONAL SUPERVISION AND THAT I AM A DULY LICENSED PROFESSIONAL ENGINEER UNDER THE LAWS OF THE STATE OF IOWA

FOR IIW, P.C.
Courtney Wand 8-20-19
COURTNEY E. WAND DATE
PE 23810 12/31/2019
LICENSE # RENEWAL DATE
PAGES OR SHEETS COVERED BY THIS CERTIFICATION:
SHEETS V.1–V.13

LICENSED PROFESSIONAL ENGINEER
JULIE P. NEEBEL
14690
IOWA

I HEREBY CERTIFY THAT THIS ENGINEERING DOCUMENT WAS PREPARED BY ME OR UNDER MY DIRECT PERSONAL SUPERVISION AND THAT I AM A DULY LICENSED PROFESSIONAL ENGINEER UNDER THE LAWS OF THE STATE OF IOWA

FOR IIW, P.C.
Julie Neebel 8-20-19
JULIE P. NEEBEL DATE
PE 14690 12/31/2020
LICENSE # RENEWAL DATE
PAGES OR SHEETS COVERED BY THIS CERTIFICATION:
INDEX THIS SHEET, EXCEPT V.1–V.13

DESIGNED BY: TRACED BY:
DETAILED BY: CHECKED BY:

BLACK HAWK COUNTY

PROJECT NUMBER	STATE	FED. ROAD DIST. NO.	FISCAL YEAR	SHEET NO.	TOTAL SHEETS
TAP-R-C007(154)--8T-07	IOWA	·	2019	A.1	23

P:\17\160\DRAWINGS\CIVIL\17160 ZZ-A.DWG 8/12/2019 4:01:00 PM MARY ABBOTT

TAP-R-C007(154)--8T-07

ABBREVIATIONS

Δ	CENTRAL ANGLE
A/C	AIR CONDITIONING(ER)
AC	ACRES
A.F.F.	ABOVE FINISHED FLOOR
AGG	AGGREGATE
AOH	ARROW ON HYDRANT
ARCH	ARCHITECTURAL
ASPH	ASPHALT
AVG	AVERAGE
B-B	B/C - B/C
B/C, BOC	BACK OF CURB
B/DITCH	BOTTOM OF DITCH
BFP	BACKFLOW PREVENTOR
B/L	BASE LINE
B/S	BOTTOM OF SLOPE
BLDG	BUILDING
B.M.	BENCH MARK
BOP	BEGINNING OF PROJECT
BOT	BOTTOM
BSMT	BASEMENT
BV	BUTTERFLY VALVE
C&G	CURB AND GUTTER
CATV	CABLE TELEVISION
CB	CATCH BASIN
C-C	CENTER TO CENTER
CF	CUBIC FEET
CH	CHORD
CH BRG	CHORD BEARING
CIP	CAST IRON PIPE
C-I-P	CAST-IN-PLACE
CISP	CAST IRON SOIL PIPE
CJ	CONTROL JOINT
℄ OR CL	CENTERLINE
CLR	CLEAR
CMP	CORRUGATED METAL PIPE
CMU	CONCRETE MASONRY UNIT
CO	CLEAN OUT
COL	COLUMN
COMP	COMPACTED
CONC	CONCRETE
CONN	CONNECTION
CONST	CONSTRUCTION
CONT	CONTINUOUS
COR	CORNER
CP	CONTROL POINT
CPE	CORRUGATED POLYETHYLENE PIPE
CRST	CRUSHED STONE
CSP	CORRUGATED STEEL PIPE
CTRD	CENTERED
CTR	CENTER
CULT	CULTIVATED
CV	CHECK VALVE
CY	CUBIC YARD
D	DEGREE OF CURVE
DIA (ø)	DIAMETER
DIP	DUCTILE IRON PIPE
DN	DOWN
DRWY	DRIVEWAY
DS	DOWNSPOUT
DWG(S)	DRAWING(S)
DWL(S)	DOWEL(S)
E	EAST
E'LY	EASTERLY
EA	EACH
EJ	EXPANSION JOINT
EL	ELEVATION
ELEC	ELECTRICAL
ELEV	ELEVATOR
EMBED	EMBEDMENT
ENGR	ENGINEER
ENTR	ENTRANCE
EOP	END OF PROJECT
EOR	END OF RADIUS
E/P	EDGE OF PAVEMENT
EQ	EQUAL
E/S	EDGE OF SHOULDER
ESMT	EASEMENT
EST	ESTIMATE
EX	EXISTING
EXC	EXCAVATE/EXCAVATION
EXP	EXPANSION
EXT	EXTERIOR
EXTD	EXTEND
EW	EACH WAY

FD	FLOOR DRAIN
FDN	FOUNDATION
F.E.	FIELD ENTRANCE
FES	FLARED END SECTION
F-F	FACE TO FACE
FFE	FINISH FLOOR ELEVATION
FG	FORM GRADE
FIN GR	FINISHED GRADE
FL	FLOWLINE
FLG	FLANGE
FLR	FLOOR
FM	FORCE MAIN
FND	FOUND
FT	FOOT/FEET
FTG	FOOTING
FUT	FUTURE
FV	FIELD VERIFY
G	GUTTER
GC	GENERAL CONTRACTOR
GALV	GALVANIZED
GND	GROUND
GRAN	GRANULAR
GRD	GRADE
GV	GATE VALVE
HMA	HOT MIX ASPHALT
HORIZ	HORIZONTAL
HPT	HIGH POINT
HSD	HEADLIGHT STOPPING DISTANCE
HYD	HYDRANT
ID	INSIDE DIA/INSIDE DIM
IE	INVERT ELEVATION
IMP	IMPROVEMENTS
IN	INCHES
INV	INVERT
IP	IRON PIPE
JB	JUNCTION BOX
JT	JOINT/JOINT LENGTH
K	RATE OF VERT CURVATURE
L	LENGTH OF CURVE
LAT	LATERAL
LF	LINEAL FOOT
LONG	LONGITUDINAL
LP	LIGHT POLE
LPT	LOW POINT
LT	LEFT
MAX	MAXIMUM
ME	MATCH EXISTING
MH	MANHOLE
MIN	MINIMUM
MISC	MISCELLANEOUS
MON	MONUMENT
MP	MILE POST
N	NORTH
N/A	NOT APPLICABLE
NE'LY	NORTHEASTERLY
N'LY	NORTHERLY
NO/#	NUMBER
NIC	NOT IN CONTRACT
NTS	NOT TO SCALE
NW'LY	NORTHWESTERLY
OC	ON CENTER
OD	OUTSIDE DIAMETER
PC	POINT OF CURVE
PERF	PERFORATED
PI	POINT OF INTERSECTION
P/L	PROPERTY LINE
PM	PRINCIPAL MERIDIAN
POB	POINT OF BEGINNING
POC	POINT OF CURVE
POT	POINT OF TANGENT
PRC	POINT OF REVERSE CURVE
PRELIM	PRELIMINARY
PROP	PROPOSED
PRV	PRESSURE REDUCING VALVE
PT	POINT OF TANGENCY
PVC	POLYVINYL CHLORIDE
PVMT	PAVEMENT
QTY	QUANTITY

R	RADIUS
R&R	REMOVE & REPLACE
R&S	REMOVE & SALVAGE
RCB	REINFORCED CONCRETE BOX
RCAP	REINFORCED CONCRETE ARCH PIPE
RCP	REINFORCED CONCRETE PIPE
RD	ROAD
REBAR	REINFORCING BAR
REF	REFERENCE
REINF	REINFORCING/REINFORCED
REV	REVISION
RIM	RIM ELEVATION
ROW	RIGHT OF WAY
RP	RADIUS POINT
RS	RESILIENT SEAT
RT	RIGHT
S	SOUTH
S=	SUPERELEVATION
SAN	SANITARY
SANS	SANITARY SEWER
SB	SOIL BORING
SCH	SCHEDULE
SD	SUB DRAIN
SEC	SECTION
SE'LY	SOUTHEASTERLY
SF	SQUARE FOOT
S.F.D.	STEP FOOTING DOWN
SHT	SHEET
SIG.	SIGNAL
SIM.	SIMILAR
S'LY	SOUTHERLY
SOG	SLAB ON GRADE
SPEC	SPECIFICATION
SS	STAINLESS STEEL
SSD	STOPPING SIGHT DISTANCE
ST	STREET
STA	STATION
STD	STANDARD
STL	STEEL
STM	STORM
STMS	STORM SEWER
SW'LY	SOUTHWESTERLY
SY	SQUARE YARD
T	TANGENT LENGTH
T/B	TOP OF BANK
T/DITCH	TOP OF DITCH
T/C, TC	TOP OF CURB
T/GRAV	TOP OF GRAVEL
T/WALL	TOP OF WALL
T/P, TP	TOP OF PAVEMENT
T/S	TOP OF SLOPE
T/SUB	TOP OF SUBGRADE
T/W, TW	TOP OF WALK
T/WM	TOP OF WATER MAIN
T & B	TOP AND BOTTOM
T.O.B.	TOP OF BEAM
T.O.B.L.	TOP OF BRICK LEDGE
T.O.C.	TOP OF CONCRETE
T.O.E.F.	TOP OF EXISTING FOOTING
T.O.F.	TOP OF FOOTING
T.O.M.	TOP OF MASONRY
T.O.P.	TOP OF PIER
T.O.S.	TOP OF STEEL
TCE	TEMP CONSTRUCTION EASEMENT
TEL	TELEPHONE
TEMP	TEMPORARY
THK	THICK / THICKNESS
TWP	TOWNSHIP
TYP	TYPICAL
U	UTILITY
UAC	USE AS CONSTRUCTED
UE	UTILITY EASEMENT
UL	UNDERWRITERS LABORATORIES, INC.
ULFM	UNDERWRITERS LABORATORIES FACTORY MUTUAL
UNO	UNLESS NOTED OTHERWISE
VAR	VARIES
VC	VERTICAL CURVE
VCP	VITRIFIED CLAY PIPE
VER	VERIFY
VERT	VERTICAL
VOL	VOLUME
VPC	VERT POINT OF CURVE
VPI	VERT POINT OF INTERSECTION
VPT	VERT POINT OF TANGENCY
W	WEST
W/	WITH
W'LY	WESTERLY
WM	WATER MAIN
W/O	WITHOUT
W.P.	WORKING POINT
WD	WOOD
WSO	WATER SHUT OFF
WV	WATER VALVE
WWF	WELDED WIRE FABRIC
YD	YARD

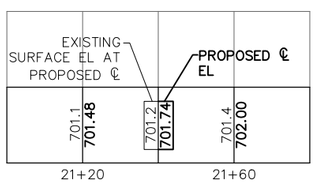

PROFILE LEGEND

LEGEND

EXISTING		PROPOSED
	PROPERTY/ROW LINE	
	EASEMENT	
	SECTION LINE	
	QUARTER SECTION LINE	
	QUARTER QUARTER SECTION LINE	
	CENTERLINE	
D	STORM SEWER	D
SD	SUB DRAIN	SD
S	SANITARY SEWER	S
FM	FORCE MAIN	FM
W	WATER LINE	W
G	GAS LINE	G
OHE	OVERHEAD ELECTRIC	OHE
E	UNDERGROUND ELECTRIC	E
OHT	OVERHEAD TELEPHONE	OHT
T	UNDERGROUND TELEPHONE	T
OHTV	OVERHEAD TELEVISION	OHTV
TV	UNDERGROUND TELEVISION	TV
FIB	FIBER OPTIC	FIB
X	WIRE FENCE	X
O	CHAINLINK FENCE	O
	WOOD FENCE	
000	CONTOUR LINE	000
	RAILROAD TRACKS	
	GUARD RAIL	
+ 0.00	SPOT ELEVATION	+ 0.00
	DIRECTION OF FLOW	
	TREE LINE	
	REVETMENT EXTENTS	
	EROSION STONE	

EXISTING		PROPOSED
	CATCH BASIN	
	AREA INTAKE	
	STORM MANHOLE	
	SANITARY MANHOLE	
	UTILITY MANHOLE	
	WATER VALVE MANHOLE	
	FIRE HYDRANT	
	WATER SHUT OFF	
	WATER VALVE	
	YARD HYDRANT	
	GAS VALVE	
	SIGN	
	UTILITY POLE	
	UTILITY POLE WITH LIGHT	
	TRAFFIC SIGNAL POLE	
	GUY ANCHOR	
	LIGHT POLE	
	UTILITY PEDESTAL	
	WELL	
	MAILBOX	
	WATER LEVEL	
	BOLLARD	
	SOIL BORING	
	POST INDICATOR VALVE	
	DECIDUOUS TREE W/ TRUNK DIA.	
	CONIFEROUS TREE W/ TRUNK DIA.	
	SHRUB OR BUSH	

SURVEY

■	FOUND REBAR
●	FOUND IRON PIPE
○	SET REBAR

Design For

242'X12' 0° SKEW PPCB BRIDGE
CEDAR VLY NATURE TRAIL OVER WOLF CRK

ABBREVIATIONS AND LEGEND

Station:10+00 Date:.

BLACK HAWK COUNTY

P:\17\160\DRAWINGS\CIVIL\17160 ZZ-A.DWG 8/20/2019 8:18:58 AM MARY ABBOTT

DESIGNED BY: TRACED BY:
DETAILED BY: CHECKED BY:

iiw 563.556.2464 ◆ 800.556.4491 IIW, P.C. ◆ www.iiwengr.com

BLACK HAWK COUNTY

PROJECT NUMBER TAP-R-C007(154)--8T-07

STATE	FED. ROAD DIST. NO.	FISCAL YEAR	SHEET NO.	TOTAL SHEETS
IOWA	.	2019	A.2	23

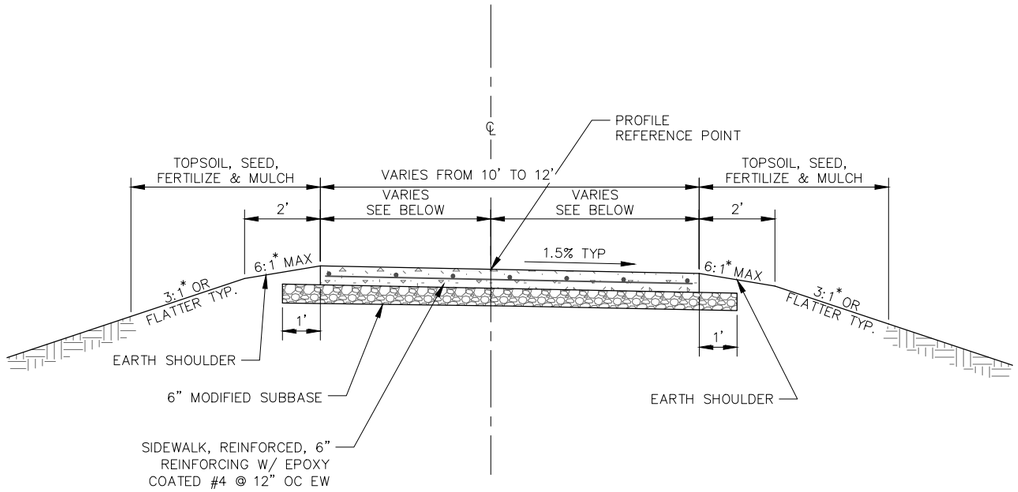

1 / B.1 TRAIL TYPICAL SECTION
SIDEWALK, REINFORCED, 6"

NOT TO SCALE

STA: 8+25 TO 8+67.50 – LT = 5' / RT = 6'
STA: 8+67.50 LT TO 8+77.50 LT – TAPER FROM 5' TO 6'
STA: 8+67.50 RT TO 8+77.50 RT – 6'
STA: 11+22.50 TO 11+32.50 – RT & LT, TAPER FROM 6' TO 5'

* WIDTH VARIES AT APPROACHES

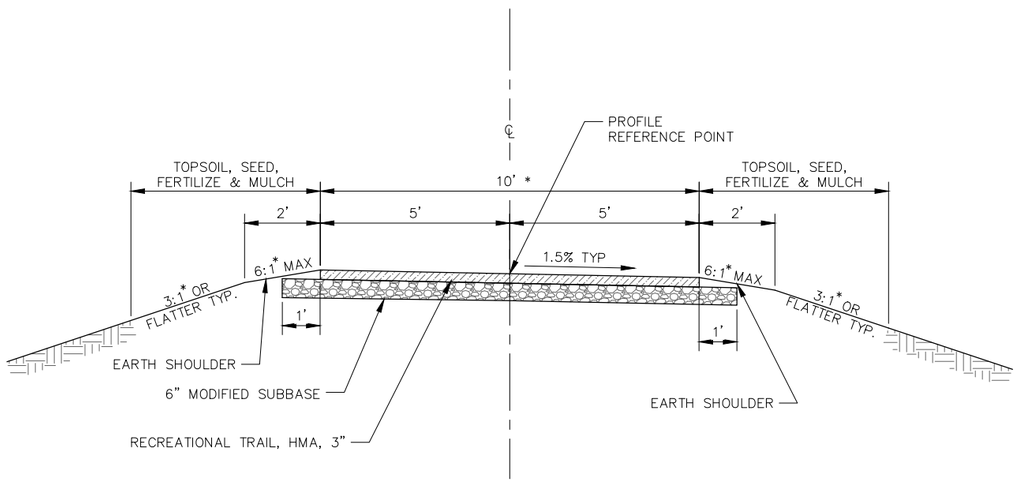

2 / B.1 TRAIL TYPICAL SECTION
HMA

NOT TO SCALE

STA: 11+32.50 TO 12+90
STA: 12+90 TO 13+00

* MAINTAIN 10' TRAIL WIDTH

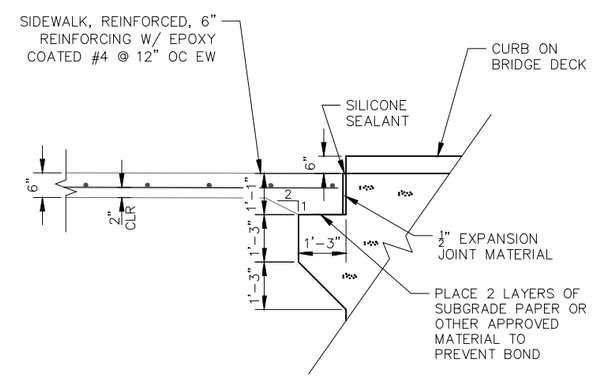

3 / B.1 BRIDGE APPROACH DETAIL
SECTION THROUGH ABUTMENT

NOT TO SCALE

STA: 8+25 TO 8+79
STA: 11+32.50 TO 11+21

* WIDTH VARIES AT APPROACH SECTION

ESTIMATED ROADWAY QUANTITIES Run Date: 8/20/2019

Project Number: TAP-R-C007(154)--8T-07

Item No.	Item Code	Item	Unit	Total
1	2101-0850001	CLEARING AND GRUBBING	ACRE	0.3
2	2102-2625000	EMBANKMENT-IN-PLACE	CY	181.0
3	2104-2713020	EXCAVATION, CLASS 13, CHANNEL	CY	330.0
4	2105-8425015	TOPSOIL, STRIP, SALVAGE AND SPREAD	CY	156.0
5	2115-0100000	MODIFIED SUBBASE	CY	53.0
6	2123-7450020	SHOULDER FINISHING, EARTH	STA	4.60
7	2401-6745625	REMOVAL OF EXISTING BRIDGE	LS	1.00
8	2402-2720000	EXCAVATION, CLASS 20	CY	48
9	2402-2721000	EXCAVATION, CLASS 21	CY	51
10	2403-0100010	STRUCTURAL CONCRETE (BRIDGE)	CY	154.4
11	2404-7775005	REINFORCING STEEL, EPOXY COATED	LB	21,044
12	2407-0563120	BEAMS, PRETENSIONED PRESTRESSED CONCRETE, BTC120	EACH	4
13	2408-7800000	STRUCTURAL STEEL	LB	1,032
14	2501-0201042	PILES, STEEL, HP 10 X 42	LF	465
15	2501-0201253	PILES, STEEL, HP 12 X 53	LF	560
16	2501-6335010	PREBORED HOLES	LF	60
17	2507-3250005	ENGINEERING FABRIC	SY	513.0
18	2507-6800061	REVETMENT, CLASS E	TON	850.0
19	2510-6745850	REMOVAL OF PAVEMENT	SY	206.2
20	2511-0301300	RECREATIONAL TRAIL, HOT MIX ASPHALT, 3 IN.	SY	186.0
21	2511-7526106	SIDEWALK, REINFORCED P.C. CONCRETE, 6 IN.	SY	76.8
22	2518-6910000	SAFETY CLOSURE	EACH	4
23	2519-1002042	FENCE, CHAIN LINK, 42 IN. HEIGHT	LF	519.5
24	2528-8445110	TRAFFIC CONTROL	LS	1.00
25	2533-4980005	MOBILIZATION	LS	1.00
26	2602-0000020	SILT FENCE	LF	100.0
27	2602-0000071	REMOVAL OF SILT FENCE OR SILT FENCE FOR DITCH CHECKS	LF	100.0
28	2602-0000101	MAINTENANCE OF SILT FENCE OR SILT FENCE FOR DITCH CHECK	LF	50.0
29	2602-0000150	STABILIZED CONSTRUCTION ENTRANCE, EC-303	LF	100.0
30	2602-0000309	PERIMETER AND SLOPE SEDIMENT CONTROL DEVICE, 9 IN. DIA.	LF	100.0
31	2602-0000350	REMOVAL OF PERIMETER AND SLOPE SEDIMENT CONTROL DEVICE	LF	100.0

ESTIMATE REFERENCE INFORMATION Run Date: 8/20/2019

Data listed below is for informational purposes only and shall not constitute a basis for any extra work orders.

No	ITEM NUMBER	DESCRIPTION
1	2101-0850001	**CLEARING AND GRUBBING** THIS ITEM SHALL INCLUDE CLEARING NECESSARY TO GAIN ACCESS TO THE SITE. ALL CLEARING AND GRUBBING WILL REQUIRE PERMISSION OF THE OWNER.
2	2102-2625000	**EMBANKMENT-IN-PLACE** THIS ITEM INCLUDES THE FILL NECESSARY TO FILL IN PREVIOUS BRIDGE OPENING AND RAISE TRAIL APPROACHES. TOTAL PLAN QUANTITY OF 181 CY IS COMPACTED IN PLACE VOLUME (0% SHRINKAGE), AFTER SUBTRACTING CUT AVAILABLE FROM CLASS 13 CHANNEL AND CLASS 20 (BOTH ADJUSTED FOR 30% SHRINKAGE BEFORE SUBTRACTION) FROM TOTAL REQUIRED FILL VOLUME. QUANTITY IS ADJUSTED FOR EMBEDMENT OF REVETMENT, CLASS E. CONTRACTOR SHALL PROCURE BORROW SITE AND PRICE TO INCLUDE HAULING AND PLACING THE EMBANKMENT MATERIAL. QUANTITY PAID WILL BE PLAN QUANTITY UNLESS ADJUSTED BECAUSE CLASS 13 CHANNEL OR CLASS 20 IS UNSUITABLE FOR FILL.
3	2104-2713020	**EXCAVATION, CLASS 13, CHANNEL** THIS ITEM INCLUDES THE EXCAVATION FOR PROJECT, WHICH IS PRIMARILY CUT NECESSARY TO RESHAPE BRIDGE OPENING. QUANTITY IS ADJUSTED FOR EMBEDMENT OF REVETMENT, CLASS E. CUT WEST OF BRIDGE IS ESTIMATED AT 149 CY (0% SHRINKAGE). CUT EAST OF BRIDGE IS ESTIMATED AT 136 CY (0% SHRINKAGE). MATERIAL MAY BE USED FOR EMBANKMENT-IN-PLACE UNLESS DEEMED UNSUITABLE BY THE ENGINEER. QUANTITY PAID SHALL BE PLAN QUANTITY.
4	2105-8425015	**TOPSOIL, STRIP, SALVAGE AND SPREAD** THIS ITEM INCLUDES COVERING ALL DISTURBED AREAS NEAR THE BRIDGE INCLUDING EARTH SHOULDER ALONGSIDE THE TRAIL SURFACING TO A DEPTH OF 6 INCHES.
5	2115-0100000	**MODIFIED SUBBASE** SEE TYPICAL SECTIONS ON B.1. PLACEMENT IN EXCESS OF DEPTHS OR WIDTHS SPECIFIED WILL NOT BE PAID FOR UNLESS APPROVED BY THE ENGINEER PRIOR TO PLACEMENT.
6	2123-7450020	**SHOULDER FINISHING, EARTH** FOR FINISHING OF SHOULDER ADJACENT TO TRAIL PAVING WITH A SLOPE THAT DOES NOT EXCEED 6:1 FOR 2 FEET, AS SHOWN ON TYPICAL SECTIONS ON B.1. FINAL SURFACE SHALL BE GRADED TO ALLOW DRAINAGE. SURFACE SHALL BE FREE OF LUMPS OR DEBRIS.
7	2401-6745625	**REMOVAL OF EXISTING BRIDGE** EXISTING BRIDGE IS A (17) SPAN BRIDGE WITH A 53' STEEL GIRDER SPAN OVER THE WATERWAY AND WITH (16) TIMBER APPROACH SPANS AND TIMBER SUBSTRUCTURES. ALL MATERIALS REMOVED SHALL BECOME THE PROPERTY OF THE CONTRACTOR AND HAULED AND DISPOSED OF OFF SITE BY THE CONTRACTOR.
8	2402-2720000	**EXCAVATION, CLASS 20** FOR BRIDGE ABUTMENT EXCAVATION
9	2402-2721000	**EXCAVATION, CLASS 21** FOR BRIDGE PIER EXCAVATION
10	2403-0100010	**STRUCTURAL CONCRETE (BRIDGE)** ITEM INCLUDES SUBDRAINS, POROUS BACKFILL, GRANULAR BACKFILL, AND GEOTEXTILE FABRIC FURNISHED AT THE BRIDGE ABUTMENTS PER V.13. CONTRACTOR SHALL SUPPLY CERTIFIED PLANT INSPECTION.
11	2404-7775005	**REINFORCING STEEL, EPOXY COATED** - -
12	2407-0563120	**BEAMS, PRETENSIONED PRESTRESSED CONCRETE, BTC120** INCLUDES COST OF BEARING PADS AND 3X3 BEARING BARS
13	2408-7800000	**STRUCTURAL STEEL** ITEM INCLUDES DECK DRAINS AND STEEL DIAPHRAGMS FOR BEAMS
14	2501-0201042	**PILES, STEEL, HP 10 X 42**
15	2501-0201253	**PILES, STEEL, HP 12 X 53** ALL PILES REQUIRE PILE POINTS. COST OF ALL PILE POINTS SHALL BE INCLUDED IN THE PRICE BID PER LF OF PILE
16	2501-6335010	**PREBORED HOLES** AT BRIDGE ABUTMENT PILING. SEE V.1.
17	2507-3250005	**ENGINEERING FABRIC**
18	2507-6800061	**REVETMENT, CLASS E** SEE SHEET V.1 FOR PLACEMENT AND TOE DETAIL.
19	2510-6745850	**REMOVAL OF PAVEMENT** FOR REMOVAL OF EXISTING HMA TRAIL SURFACE FROM STA. 8+25 TO 8+42 AND STA. 11+27 TO 13+00. EXISTING THICKNESS IS ASSUMED TO BE 3 INCHES.
20	2511-0301300	**RECREATIONAL TRAIL, HOT MIX ASPHALT, 3 IN.** FOR TRAIL PAVING. SEE SHEET B.1 FOR STATION RANGE OF PLACEMENT. MAXIMUM CROSS SLOPE OF 2%, TARGET OF 1.5%. USE PG 58-28S. THE CONTRACTOR SHALL SUPPLY CERTIFIED PLANT INSPECTION.
21	2511-7526106	**SIDEWALK, REINFORCED P.C. CONCRETE, 6 IN.** FOR REINFORCED CONCRETE TRAIL AND BRIDGE APPROACH. SEE SHEET B.1 FOR STATION RANGE OF PLACEMENT. MAXIMUM CROSS SLOPE OF 2%, TARGET OF 1.5%. VERIFY ADEQUATE TRAIL DRAINAGE SO PUDDLES ARE NOT PRESENT ON TRAIL. CONFIRM JOINTING WITH ENGINEER PRIOR TO INSTALLATION. THE CONTRACTOR SHALL SUPPLY CERTIFIED PLANT INSPECTION.
22	2518-6910000	**SAFETY CLOSURE** SEE TABULATION ON SHEET C.2
23	2519-1002042	**FENCE, CHAIN LINK, 42 IN. HEIGHT** DETAILS SHALL BE PER V.12. CONNECTION BETWEEN WING FENCING AND BRIDGE FENCING SHALL PROHIBIT THE PASSAGE OF A 4" SPHERE.
24	2528-8445110	**TRAFFIC CONTROL** FOR SIGNS AND TRAFFIC CONTROL DEVICES FOR PEDESTRIAN PROTECTION AND FOR ANY SIGNS NEEDED AT ROADWAYS DUE TO HAULING.
25	2533-4980005	**MOBILIZATION** SEE SHEET C.2 FOR EROSION CONTROL NOTE. ANY TEMPORARY STREAM CROSSING IS CONSIDERED INCIDENTAL TO MOBILIZATION.
26	2602-0000020	**SILT FENCE** THE QUANTITY INCLUDES ESTIMATED LOCATIONS FOR PLACEMENT OF SILT FENCE TO ADDRESS POSSILE EROSION DURING CONSTRUCTION FROM ENTERING WOLF CREEK. VERIFY THE SPECIFIC LOCATIONS WITH THE ENGINEER PRIOR TO BEGINNING PLACEMENT. BID ITEM INCLUDES 25% ADDITIONAL QUANTITY FOR FIELD ADJUSTMENTS AND REPLACEMENTS.
27	2602-0000071	**REMOVAL OF SILT FENCE OR SILT FENCE FOR DITCH CHECKS** - -
28	2602-0000101	**MAINTENANCE OF SILT FENCE OR SILT FENCE FOR DITCH CHECK** THIS ITEM IS INCLUDED FOR CLEANOUT AND REPAIR OF THE SILT FENCE DURING THE PROJECT.
29	2602-0000150	**STABILIZED CONSTRUCTION ENTRANCE, EC-303** ASSUMED ONE ENTRANCE AT THE BEGINNING OF THE PROJECT AND ONE ENTRANCE AT THE END OF THE PROJECT. CONTRACTOR IS RESPONSIBLE TO PREVENT TRACKING ONTO EXISTING HMA TRAIL SURFACING OUTSIDE THE PROJECT LIMITS. ANY DISTURBED HMA TRAIL SURFACING OUTSIDE THE PROJECT LIMITS SHALL BE RESTORED AT NO COST TO THE PROJECT. METHOD OF MEASUREMENT AND BASIS OF PAYMENT SHALL BE BY LINEAR FEET MEASURED ALONG THE LENGTH OF THE ENTRANCE AT THE ENTRANCE CENTERLINE. PAYMENT IS FULL COMPENSATION FOR FURNISHING ALL MATERIALS AND WORK NECESSARY FOR INSTALLATION, MAINTENANCE, AND REMOVAL OF STABILIZED CONSTRUCTION ENTRANCE. MAINTENANCE INCLUDES INSTALLING ADDITIONAL MATERIAL OR CLEANING REQUIRED TO MAINTAIN THE ENTRANCE IN A FUNCTIONAL CONDITION.
30	2602-0000309	**PERIMETER AND SLOPE SEDIMENT CONTROL DEVICE, 9 IN. DIA.** THE QUANTITY INCLUDES ESTIMATED LOCATIONS FOR PLACEMENT OF PERIMETER AND SLOPE SEDIMENT CONTROL DEVICE TO ADDRESS POSSILE EROSION DURING CONTRUCTION FROM ENTERING WOLF CREEK. VERIFY THE SPECIFIC LOCATIONS WITH THE ENGINEER PRIOR TO BEGINNING PLACEMENT. BID ITEM INCLUDES 25% ADDITIONAL QUANTITY FOR FIELD ADJUSTMENTS AND REPLACEMENTS.
31	2602-0000350	**REMOVAL OF PERIMETER AND SLOPE SEDIMENT CONTROL DEVICE** - -

Design For

242'X12' 0° SKEW PPCB BRIDGE
CEDAR VLY NATURE TRAIL OVER WOLF CRK

BID ITEMS &
REFERENCE NOTES

Station:10+00 Date:.

BLACK HAWK COUNTY

TAP-R-C007(154)--8T-07

GENERAL NOTES:

AREAS FOR STORAGE, PARKING, AND SERVICE AREAS WILL BE SUBJECT TO APPROVAL BY THE OWNER.

IT SHALL BE THE CONTRACTOR'S RESPONSIBILITY TO PROVIDE WASTE AREAS OR DISPOSAL SITES FOR EXCESS MATERIAL (EXCAVATED MATERIAL OR BROKEN CONCRETE) WHICH IS NOT DESIRABLE TO BE INCORPORATED INTO THE WORK INVOLVED ON THIS PROJECT.

ALL UNSALVAGEABLE MATERIAL AND RUBBLE GENERATED DURING THIS PROJECT SHALL BE DISPOSED OF OFF THE TRAIL RIGHT-OF-WAY IN A WASTE AREA PROVIDED BY THE CONTRACTOR AND APPROVED BY THE OWNER. THE WASTED MATERIAL MUST NOT CREATE AN UNSIGHTLY CONDITION WHEN VIEWED FROM PUBLIC HIGHWAYS. REMOVALS AND DISPOSALS SHALL BE IN ACCORDANCE WITH SECTION 2401 OF THE STANDARD SPECIFICATIONS. ALSO, ALL EXCESSIVE EXCAVATED MATERIAL AND UNSUITABLE MATERIAL FOR BACKFILL WILL BECOME THE PROPERTY OF THE CONTRACTOR AND WILL BE DISPOSED OF OFF SITE. ALL BORROW MATERIAL SHALL BE SUPPLIED BY THE CONTRACTOR AND APPROVED BY THE OWNER.

IT SHALL BE THE CONTRACTOR'S RESPONSIBILITY TO ENSURE THAT AREAS (INCLUDING HAUL ROADS) SELECTED FOR WASTE OR DISPOSAL NOT IMPACT 1) CULTURALLY SENSITIVE SITES OR GRAVES OR 2) WETLANDS OR "WATERS OF THE U.S.", INCLUDING STREAMS OR STREAM BANKS BELOW THE "ORDINARY HIGH WATER MARK", WITHOUT AN APPROVED U.S. ARMY CORPS OF ENGINEERS SECTION 404 PERMIT.

NO PAYMENT FOR OVERHAUL WILL BE ALLOWED.

TEMPORARY STREAM CROSSING

IT IS ANTICIPATED THAT A TEMPORARY STREAM CROSSING AT BRIDGE WILL BE UTILIZED. CONSTRUCTION SHALL BE AS PER THE APPLICABLE PORTIONS OF IOWA DOT STANDARD ROAD PLAN EW-401. CONTRACTOR SHALL BE RESPONSIBLE FOR ALL LABOR, EQUIPMENT, AND MATERIALS NEEDED TO CONSTRUCT, MAINTAIN, AND REMOVE A TEMPORARY STREAM CROSSING THAT MEETS THE IOWA DNR ADMINISTRATIVE CODE REQUIREMENTS FOR AS LONG AS CONTRACTOR OPERATIONS REQUIRE. CONTRACTOR SHALL PROVIDE FOR RESTORATION OF ALL AREAS LEADING TO STREAM CROSSING, INCLUDING PLACEMENT OF TOPSOIL, SEEDING, FERTILIZER, AND MULCH ON OVERBANKS OUTSIDE OF PLAN CONSTRUCTION LIMITS. ANY REVETMENT NECESSARY FOR BANK STABILIZATION FOLLOWING REMOVAL OF TEMPORARY CROSSING WILL BE PAID FOR AT THE CONTRACT UNIT PRICE OF REVETMENT, CLASS E. REVETMENT USED TO CONSTRUCT THE TEMPORARY STREAM CROSSING WILL NOT BE PAID FOR. HOWEVER, REVETMENT USED FOR THE TEMPORARY STREAM CROSSING WHICH MEETS THE PROJECT REQUIREMENTS MAY BE LATER INCORPORATED INTO THE REVETMENT USED FOR RESTORATION OF THE BANKS AT THE CROSSING LOCATION OR AROUND THE ABUTMENT. ANY MATERIAL THAT IS ULTIMATELY PLACED PERMANENTLY AS A PART OF THE PROJECT WILL BE PAID BY THE TON. AFTER COMPLETION OF BRIDGE STRUCTURE AND SUFFICIENT TIME TO ALLOW FOR PROPER CURING OF STRUCTURAL CONCRETE, CONTRACTOR MAY UTILIZE PROPOSED BRIDGE FOR ACCESS OVER WOLF CREEK WITH PRIOR APPROVAL OF THE ENGINEER.

UTILITY NOTES

THE LOCATIONS OF THE UTILITIES SHOWN IN THE PLAN DRAWINGS WERE TAKEN FROM SURFICIAL FIELD MEASUREMENTS AND EXISTING PUBLIC RECORDS. THE UTILITIES PRESENT MAY NOT EXIST AS SHOWN. ADDITIONAL FACILITIES OTHER THAN THOSE SHOWN MAY BE PRESENT. IT SHALL BE THE RESPONSIBILITY OF ANYONE MAKING USE OF THE PLAN DRAWINGS TO ASCERTAIN THE EXACT LOCATION, SIZE, AND ELEVATION OF ALL UTILITIES THAT MAY BE PRESENT WITHIN THE CONSTRUCTION LIMITS PRIOR TO THE BEGINNING OF ANY CONSTRUCTION. THE CONTRACTOR IS REQUIRED TO CONTACT IOWA ONE CALL, AND IS RESPONSIBLE FOR ANY DAMAGE THAT OCCURS TO EXISTING UTILITIES. THE CONTRACTOR SHALL AFFORD ACCESS TO THESE FACILITIES FOR NECESSARY MODIFICATION OF SERVICES.

THE OWNER WILL PROVIDE THE CONSTRUCTION STAKING FOR USE BY THE CONTRACTOR. STAKING WILL BE PROVIDED AS FOLLOWS:

1. PROVIDE STAKING FOR GRADING OF TRAIL:
   a. OFFSET STAKES TO GRADING LIMITS FOR TRAIL.
   b. OFFSET STAKES WILL BE PROVIDED AT REGULAR STATION INTERVALS ALONG ONE SIDE OF TRAIL AND AT NECESSARY HIGH AND LOW POINTS.
   c. STAKES WILL BE PROVIDED FOR RADIUS POINTS FOR THE TRAIL.
2. STAKING WILL BE PROVIDED FOR THE STRUCTURE ABUTMENT AND PIER CENTERLINE ALIGNMENT WITH OFFSETS.
3. PROVIDE TWO (2) BENCHMARKS NEAR STRUCTURE.
4. STAKING WILL BE PROVIDED ON A ONE-TIME BASIS AND THE CONTRACTOR WILL BE RESPONSIBLE FOR PRESERVING STAKES. ANY REPLACEMENT OF STAKES WILL BE AT THE CONTRACTOR'S EXPENSE. SURVEY CREW WILL NOT MOBILIZE FOR LESS THAN 4 HOURS OF ONSITE STAKING. THE CONTRACTOR SHOULD PROVIDE 48 HOURS' NOTICE TO ENGINEER FOR SCHEDULING A SURVEY CREW.
5. THE ABOVE STAKING SERVICES WILL BE COMPLETED IN A MAXIMUM NUMBER OF 2 TRIPS TO THE PROJECT.

CENTURYLINK - CENTURYLINK HAS AN EASEMENT AND FIBER LINE SOUTH OF THE EXISTING BRIDGE ALONG CEDAR VALLEY NATURE TRAIL. THERE MAY BE A CONFLICT WITH THE PROPOSED EAST ABUTMENT CONSTRUCTION. IF THERE IS A CONFLICT, CENTURYLINK WILL WORK WITH THE BRIDGE CONTRACTOR TO RELOCATE FACILITIES. CONTRACTOR TO PROVIDE CENTURYLINK WITH TWO WEEKS NOTICE PRIOR TO THE START OF CONSTRUCTION. CENTURYLINK WILL COORDINATE WITH THE CONTRACTOR DURING CONSTRUCTION AS NECESSARY.

105-4
10-18-11

STANDARD ROAD PLANS

The following Standard Road Plans apply to construction work on this project.

Number	Date	Title
EC-201	10-15-19	Silt Fence
EC-204	04-18-17	Perimeter and Slope Sediment Control Devices
EC-303	04-16-19	Stabilized Construction Entrance
EW-101	10-17-17	Embankment and Rebuilding Embankments
EW-401	10-20-15	Temporary Stream Crossing, Causeway, or Equipment Pad
PV-101	04-16-19	Joints
TC-1	10-15-19	Work Not Affecting Traffic (Two-Lane or Multi-Lane)
TC-252	04-19-16	Routes Closed to Traffic

232-3A
04-16-19

EROSION CONTROL (RURAL SEEDING)

Following the completion of work in a disturbed area and according to the seeding dates in Section 2601 of the Standard Specifications, place seed, fertilizer, and mulch on the disturbed area lying 8 feet adjacent to shoulder and median as follows:

Place seed and fertilize according to the requirements of Article 2601.03,C,3 and Section 4169 of the Standard Specifications.

Place mulch according to the requirements of Articles 2601.03,E,2,a and 4169.07,A of the Standard Specifications.

Preparing the seedbed, furnishing and applying seed, fertilizer, and mulch are all incidental to mobilization and will not be paid for separately.

FIELD PLACEMENT CONSTRAINTS FOR TRAIL:

1. CROSS SLOPE OF TRAILS SHALL NOT EXCEED 2% AT ANY LOCATION.
2. LONGITUDINAL TRAIL SLOPES SHALL NOT EXCEED 5%.

108-13A
08-01-08

SAFETY CLOSURES

Refer to Section 2518 of the Standard Specifications

Station	Closure Type		Remarks
	Road Qty.	Hazard Qty.	
8+25.00	1		BEGINNING OF PROJECT
8+79.00		1	WEST ABUTMENT
11+21.00		1	EAST ABUTMENT
13+00.00	1		END OF PROJECT

GENERAL BRIDGE NOTES:

DESIGN STRESSES:
DESIGN STRESSES FOR THE FOLLOWING MATERIALS ARE IN ACCORDANCE WITH AASHTO LRFD BRIDGE DESIGN SPECIFICATIONS 7TH ED, SERIES OF 2014. REINFORCING STEEL IN ACCORDANCE WITH LRFD AASHTO SECTION 5, GRADE 60. CONCRETE IN ACCORDANCE WITH LRFD AASHTO SECTION 5, f'c = 4.0 KSI. EXCEPT SEE V.9 FOR PPCB f'c. DESIGN LIVE LOAD IS 90 PSF PEDESTRIAN LOADING OR H10 VEHICLE (WITH NO LANE LOAD).

SOUNDING AND TEST BORING DATA SHOWN ON THE PLANS WERE ACCUMULATED FOR DESIGNING AND ESTIMATING PURPOSES ONLY. THEIR APPEARANCE ON THE PLAN DOES NOT CONSTITUTE A GUARANTEE THAT CONDITIONS OTHER THAN THOSE INDICATED WILL NOT BE ENCOUNTERED.

ALL PILES REQUIRE PILE POINTS. COST OF ALL PILE POINTS IS TO BE INCLUDED IN THE PRICE BID PER LINEAL FOOT FOR PILING.

ABUTMENT PILE DESIGN NOTES:
THE CONTRACT LENGTHS OF 75 FEET FOR THE WEST ABUTMENT PILES AND 80 FEET FOR THE EAST ABUTMENT PILES IS BASED ON A MIXED SOIL CLASSIFICATION, A TOTAL FACTORED AXIAL LOAD PER PILE (PU) OF 143 KIPS, AND A GEOTECHNICAL RESISTANCE FACTOR (PHI) OF 0.6 FOR SOIL AND 0.7 FOR ROCK END BEARING.

THE NOMINAL AXIAL BEARING RESISTANCE FOR CONSTRUCTION CONTROL WAS DETERMINED FROM A MIXED SOIL CLASSIFICATION AND A GEOTECHNICAL RESISTANCE FACTOR (PHI) OF 0.55 FOR SOIL AND 0.7 FOR ROCK END BEARING. PILES ARE ASSUMED TO BE DRIVEN FROM A START ELEVATION AT THE BOTTOM OF FOOTING.

ABUTMENT PILE DRIVING NOTE:
THE REQUIRED NOMINAL AXIAL BEARING RESISTANCE FOR ABUTMENT PILES IS 116 TONS AT END OF DRIVE OR RETAP. THE PILE CONTRACT LENGTH SHALL BE DRIVEN AS PER PLAN UNLESS PILES REACH REFUSAL. CONSTRUCTION CONTROL REQUIRES A MODIFIED IOWA DOT ENR FORMULA.

PIER PILE DESIGN NOTES:
THE CONTRACT LENGTH OF 80 FEET FOR THE PIER PILES IS BASED ON A MIXED SOIL CLASSIFICATION, A TOTAL FACTORED AXIAL LOAD PER PILE (PU) OF 171 KIPS, AND A GEOTECHNICAL RESISTANCE FACTOR (PHI) OF 0.6.

THE NOMINAL AXIAL BEARING RESISTANCE FOR CONSTRUCTION CONTROL WAS DETERMINED FROM A MIXED SOIL CLASSIFICATION AND A GEOTECHNICAL RESISTANCE FACTOR (PHI) OF 0.55 FOR SOIL AND 0.7 FOR ROCK END BEARING. PILES ARE ASSUMED TO BE DRIVEN FROM A START ELEVATION AT THE BOTTOM OF ENCASEMENT. DESIGN SCOUR (200-YEAR) WAS ASSUMED TO AFFECT THE UPPER 5 FEET OF EMBEDDED PILE LENGTH AND CAUSE 10 KIPS OF DRIVING RESISTANCE.

PIER PILE DRIVING NOTE:
THE REQUIRED NOMINAL AXIAL BEARING RESISTANCE FOR PIER PILES IS 140 TONS AT END OF DRIVE OR RETAP. THE PILE CONTRACT LENGTH SHALL BE DRIVEN AS PER PLAN UNLESS PILES REACH REFUSAL. CONSTRUCTION CONTROL REQUIRES A MODIFIED IOWA DOT ENR FORMULA.

SCRAPE SAMPLE:
THE BRIDGE WAS INSPECTED AND TESTED FOR ASBESTOS CONTAINING MATERIALS. NO ASBESTOS WAS DETECTED.

A SCRAPE SAMPLE WAS TAKEN FROM THE STEEL BEAM PAINT ON AN AREA OF THIS BRIDGE TO GET AN INDICATION OF THE EXISTENCE OF AND LEVEL OF TOTAL LEAD AND TOTAL CHROMIUM. ANALYSIS OF TOTAL LEAD ON THIS SAMPLE WAS <86 PARTS PER MILLION (PPM). ANALYSIS OF TOTAL CHROMIUM ON THIS SAMPLE WAS 190 PPM. THESE ANALYSES SHOW THE EXISTENCE OF THESE TWO TOXIC CONSTITUENTS. LEVELS INDICATED BY THESE TESTS COULD CREATE CONDITIONS ABOVE REGULATORY LIMITS FOR HEALTH AND SAFETY REQUIREMENTS. NO OTHER CONSTITUENTS WERE ANALYZED. THE BIDDER SHOULD NOT RELY ON THE TESTING AND ANALYSIS FOR ANY PURPOSE OTHER THAN AS AN INDICATION OF THE EXISTENCE OF THESE TWO TOXIC CONSTITUENTS.

232-10
04-18-17

EMERALD ASH BORER

Any living, dead, cut or fallen material of the ash (Fraxinus spp.) including trees, nursery stock, logs, firewood, stumps, roots, branches, and composted or uncomposted ash chips can be freely moved within the yellow areas of the most recent Federal EAB Quarantine & Authorized Transit.

https://www.aphis.usda.gov/plant health/plant pest info/emerald ash b/downloads/eab quarantine map.pdf.

Obtain appropriate Compliance Agreements from USDA APHIS PPQ prior to moving any of the above listed ash articles to areas outside the yellow zone on the map.

For questions, concerns, and general assistance, contact:

USDA APHIS PPQ, Iowa office, 515-414-3295

Or

Iowa Department of Agriculture & Land Stewardship
515-725-1470
Entomology@IowaAgriculture.gov

282-3
04-17-18

TEMPORARY STREAM CROSSING, CAUSEWAY, OR EQUIPMENT PAD

Standard Road Plan EW-401 is listed in Tabulation 105-4; however, it is included for information purposes only since it is an option. No quantities associated with constructing EW-401 are included in any bid items.

Design For
242'X12' 0° SKEW PPCB BRIDGE
CEDAR VLY NATURE TRAIL OVER WOLF CRK

NOTES

Station:10+00 Date:.

BLACK HAWK COUNTY

DESIGNED BY: TRACED BY:
DETAILED BY: CHECKED BY:

iiw 563.556.2464 ◆ 800.556.4491
IIW, P.C. ◆ www.iiwengr.com

BLACK HAWK COUNTY

PROJECT NUMBER	STATE	FED. ROAD DIST. NO.	FISCAL YEAR	SHEET NO.	TOTAL SHEETS
TAP-R-C007(154)--8T-07	IOWA	.	2019	C.2	23

P:\17\160\DRAWINGS\CIVIL\17160 ZZ-C-1.DWG 8/20/2019 8:19:23 AM MARY ABBOTT

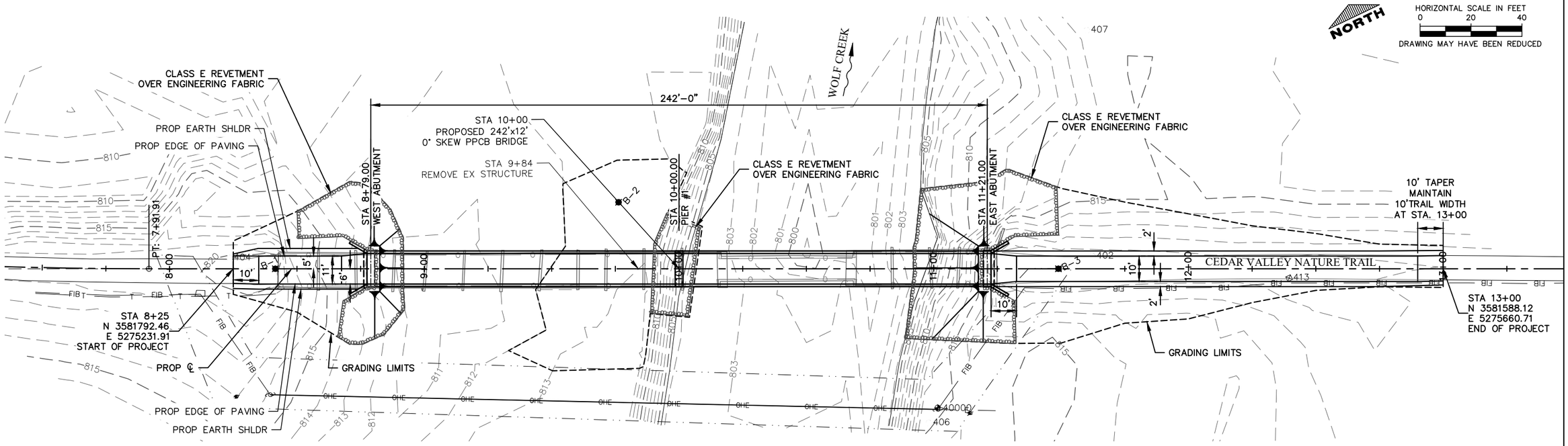

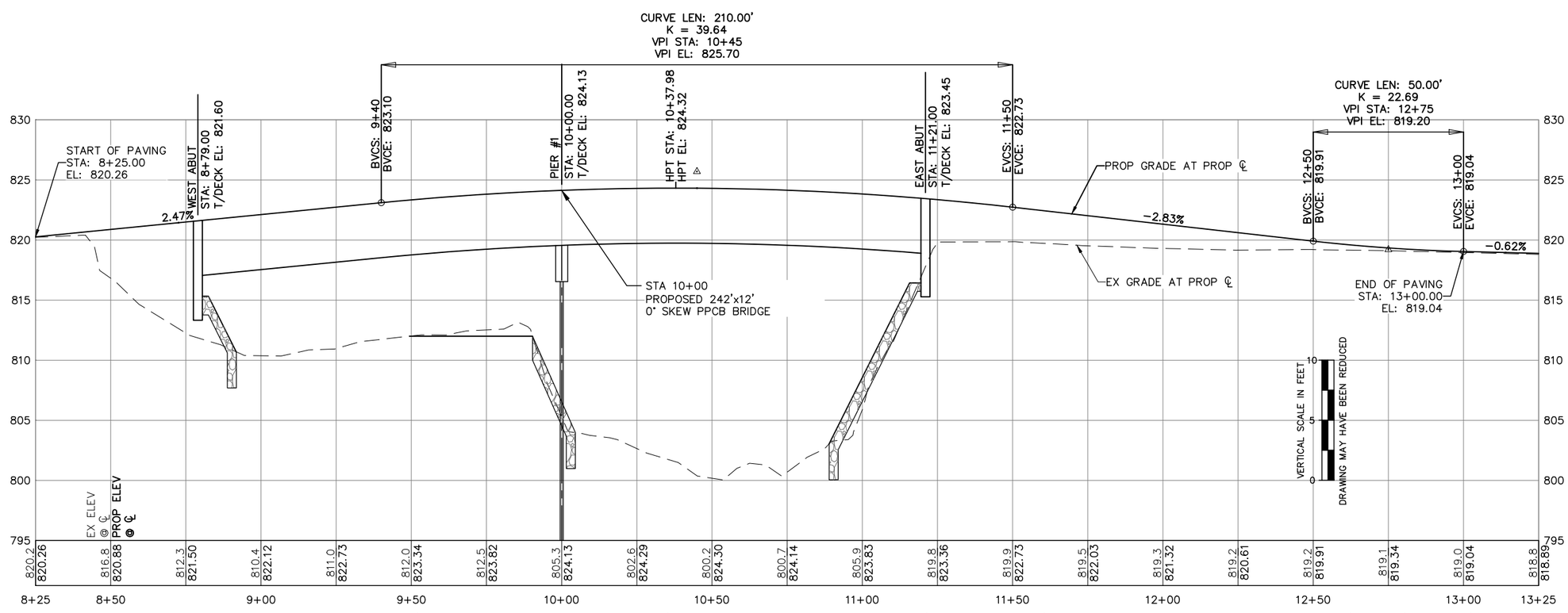

P:\17\160\DRAWINGS\CIVIL\17160 ZZ-D-1.DWG 8/20/2019 8:20:13 AM MARY ABBOTT

DESIGNED BY:	TRACED BY:	iiw 563.556.2464 ◆ 800.556.4491 IIW, P.C. ◆ www.iiwengr.com	BLACK HAWK COUNTY	PROJECT NUMBER	TAP-R-C007(154)--8T-07	STATE	FED. ROAD DIST. NO.	FISCAL YEAR	SHEET NO.	TOTAL SHEETS
DETAILED BY:	CHECKED BY:					IOWA	.	2019	D.1	23

BRAUN INTERTEC

LOG OF BORING

Braun Project B1801129
Geotechnical Evaluation
Cedar Valley Nature Trail Pedestrian Bridge
Cedar Valley Nature Trail over Wolf Creek
La Porte City, Iowa

BORING: **B-1**
LOCATION: Latitude: 42.318332°
Longitude: -92.191100°

DRILLER: J. Smith/D. Moeller | METHOD: 3 1/4" HSA, Autohammer | DATE: **2/9/18** | SCALE: **1" = 11.5'**

Elev. feet	Depth feet	Symbol	Description of Materials (Soil-ASTM D2488 or D2487, Rock-USACE EM1110-1-2908)	BPF	WL	MC %	Tests or Notes
820.0	0.0						
819.5	0.5	PAV	Asphalt Pavement.				
		FILL	FILL: Clayey Sand, trace Gravel, fine- to medium-grained, dark brown, moist	10		11	
810.0	10.0			5		11	P200=17%
		SP	POORLY GRADED SAND, fine-grained, brown, moist, loose (Alluvium)	7			
802.0	18.0						
		SP-SM	POORLY GRADED SAND with SILT, trace Gravel, fine- to coarse-grained, brown to gray, moist, very loose to medium dense (Glacial Outwash)	4	▽		An open triangle in the water level (WL) column indicates the depth at which groundwater was observed while drilling. No recovery. Mud rotary drilling method began at 25 feet.
				21			
				21			
				17			
782.0	38.0						
		SP	POORLY GRADED SAND with GRAVEL, fine- to coarse-grained, gray, wet, medium dense (Glacial Outwash)				
774.0	46.0			18			
		SC	CLAYEY SAND, trace Gravel, gray, moist, stiff (Glacial Till)	15			
767.0	53.0						
		CL	SANDY LEAN CLAY, trace Gravel, gray, moist, stiff to very stiff (Glacial Till)	16			
				14			
				23			No recovery.
				17			
749.0	71.0						
		LS	Highly weathered LIMESTONE with CLAY seams, brown, moist, hard (Bedrock)	*			*50 blows for 1 inch. No recovery.
741.4	78.6						
			AUGER REFUSAL AT 78.6 FEET.	*			*50 blows for 1 inch.
			Water observed at 19 feet while drilling.				
			Boring then backfilled.				

(See Descriptive Terminology sheet for explanation of abbreviations)

LOG OF BORING N:\GINT\PROJECTS\CEDARRAPIDS\2018\01129.GPJ BRAUN_V8_CURRENT.GDT 3/27/18 09:46

B1801129 Braun Intertec Corporation B-1 page 1 of 1

BRAUN INTERTEC

LOG OF BORING

Braun Project B1801129
Geotechnical Evaluation
Cedar Valley Nature Trail Pedestrian Bridge
Cedar Valley Nature Trail over Wolf Creek
La Porte City, Iowa

BORING: **B-2**
LOCATION: Latitude: 42.318222°
Longitude: -92.190559°

DRILLER: J. Smith/D. Moeller | METHOD: 3 1/4" HSA, Autohammer | DATE: **2/13/18** | SCALE: **1" = 11.5'**

Elev. feet	Depth feet	Symbol	Description of Materials (Soil-ASTM D2488 or D2487, Rock-USACE EM1110-1-2908)	BPF	WL	Tests or Notes
812.5	0.0					
811.5	1.0	TS	Topsoil			
		SP	POORLY GRADED SAND, trace Gravel, fine- to medium-grained, brown, moist, very loose to loose (Alluvium)	10		
				2	▽	
798.5	14.0					
		SC	CLAYEY SAND, trace Organics, fine-grained, black, moist, very loose (Alluvium)	WH		
794.5	18.0					
		SP	POORLY GRADED SAND, trace Gravel, fine- to coarse-grained, gray, wet, loose to medium dense (Glacial Outwash)	13		No recovery. Mud rotary drilling method began at 20 feet.
				5		
				6		
				4		
768.0	44.5					
		CL	LEAN CLAY with ORGANICS, dark gray, moist, stiff (Glacial Lacustrine)	10		
				9		
				10		
754.5	58.0					
		CL	LEAN CLAY with GRAVEL, light gray, wet, very stiff (Residuum)	24		No recovery.
749.5	63.0					
		LS	Highly weathered LIMESTONE with CLAY seams, brown, moist, hard (Bedrock)	*		*50 blows for 1 inch. No recovery.
743.2	69.3			*		*50 blows for 4 inches.
			AUGER REFUSAL AT 69.3 FEET.			
			Water observed at 8 feet while drilling.			
			Boring then backfilled.			

(See Descriptive Terminology sheet for explanation of abbreviations)

LOG OF BORING N:\GINT\PROJECTS\CEDARRAPIDS\2018\01129.GPJ BRAUN_V8_CURRENT.GDT 3/27/18 09:46

B1801129 Braun Intertec Corporation B-2 page 1 of 1

Design For
242'X12' 0° SKEW PPCB BRIDGE
CEDAR VLY NATURE TRAIL OVER WOLF CRK

SOIL BORING

Station:10+00 Date:.

BLACK HAWK COUNTY

DESIGNED BY: TRACED BY:
DETAILED BY: CHECKED BY:

iiw 563.556.2464 ◆ 800.556.4491 IIW, P.C. ◆ www.iiwengr.com

BLACK HAWK COUNTY

PROJECT NUMBER	STATE	FED. ROAD DIST. NO.	FISCAL YEAR	SHEET NO.	TOTAL SHEETS
TAP-R-C007(154)--8T-07	IOWA	.	2019	SPS.1	23

TAP-R-C007(154)--8T-07

P:\17\160\DRAWINGS\CIVIL\17160 ZZ-SPS-1.DWG 8/20/2019 8:20:35 AM MARY ABBOTT

BRAUN INTERTEC

LOG OF BORING

Braun Project B1801129
Geotechnical Evaluation
Cedar Valley Nature Trail Pedestrian Bridge
Cedar Valley Nature Trail over Wolf Creek
La Porte City, Iowa

BORING: **B-3**

LOCATION: Latitude: 42.317931°
Longitude: -92.189977°

DRILLER: J. Smith/D. Moeller | METHOD: 3 1/4" HSA, Autohammer | DATE: **2/8/18** | SCALE: **1" = 11.5'**

Elev. feet	Depth feet	Symbol	Description of Materials (Soil-ASTM D2488 or D2487, Rock-USACE EM1110-1-2908)	BPF	WL	MC %	Tests or Notes
820.0	0.0						
819.5	0.5	PAV	Asphalt Pavement.				
		FILL	FILL: Clayey Sand, trace Gravel, dark brown, moist	6		10	P200=20%
				5	▽	11	
806.0	14.0						
		SP-SM	POORLY GRADED SAND with SILT, brown, moist to wet, very loose (Alluvium)	4			
				3			
797.0	23.0						
		SP-SM	POORLY GRADED SAND with SILT, trace Gravel, gray, wet, medium dense to dense (Glacial Outwash)	17			No recovery. Mud rotary drilling method began at 25 feet.
				28			
				49			
				42			No recovery.
778.0	42.0						
		CL	LEAN CLAY, trace Sand, gray, moist, stiff (Glacial Till)	9			
				11			
768.0	52.0						
		CL	SANDY LEAN CLAY, gray, moist, soft (Glacial Till)	4			
				4			
758.0	62.0						
		SP	POORLY GRADED SAND, trace Gravel, medium dense (Glacial Outwash)				No recovery.
				21			No recovery.
748.0	72.0						
		LS	Highly weathered LIMESTONE with CLAY seams, brown, moist, hard (Bedrock)	55			
				63			
736.4	83.6						
			AUGER REFUSAL AT 83.6 FEET.	*			*50 blows for 1 inch. No recovery.
			Water observed at 10 feet while drilling.				
			Boring then backfilled.				

(See Descriptive Terminology sheet for explanation of abbreviations)

LOG OF BORING N:\GINT\PROJECTS\CEDARRAPIDS\2018\01129.GPJ BRAUN_V8_CURRENT.GDT 3/27/18 09:46

Design For
242'X12' 0° SKEW PPCB BRIDGE
CEDAR VLY NATURE TRAIL OVER WOLF CRK

SOIL BORING

Station:10+00 Date:.

BLACK HAWK COUNTY

DESIGNED BY: TRACED BY:
DETAILED BY: CHECKED BY:

iiw 563.556.2464 ◆ 800.556.4491 IIW, P.C. ◆ www.iiwengr.com

BLACK HAWK COUNTY

PROJECT NUMBER	STATE	FED. ROAD DIST. NO.	FISCAL YEAR	SHEET NO.	TOTAL SHEETS
TAP-R-C007(154)--8T-07	IOWA	.	2019	SPS.2	23

TAP-R-C007(154)--8T-07

P:\17\160\DRAWINGS\CIVIL\17160 ZZ-SPS-1.DWG 8/20/2019 8:20:38 AM MARY ABBOTT

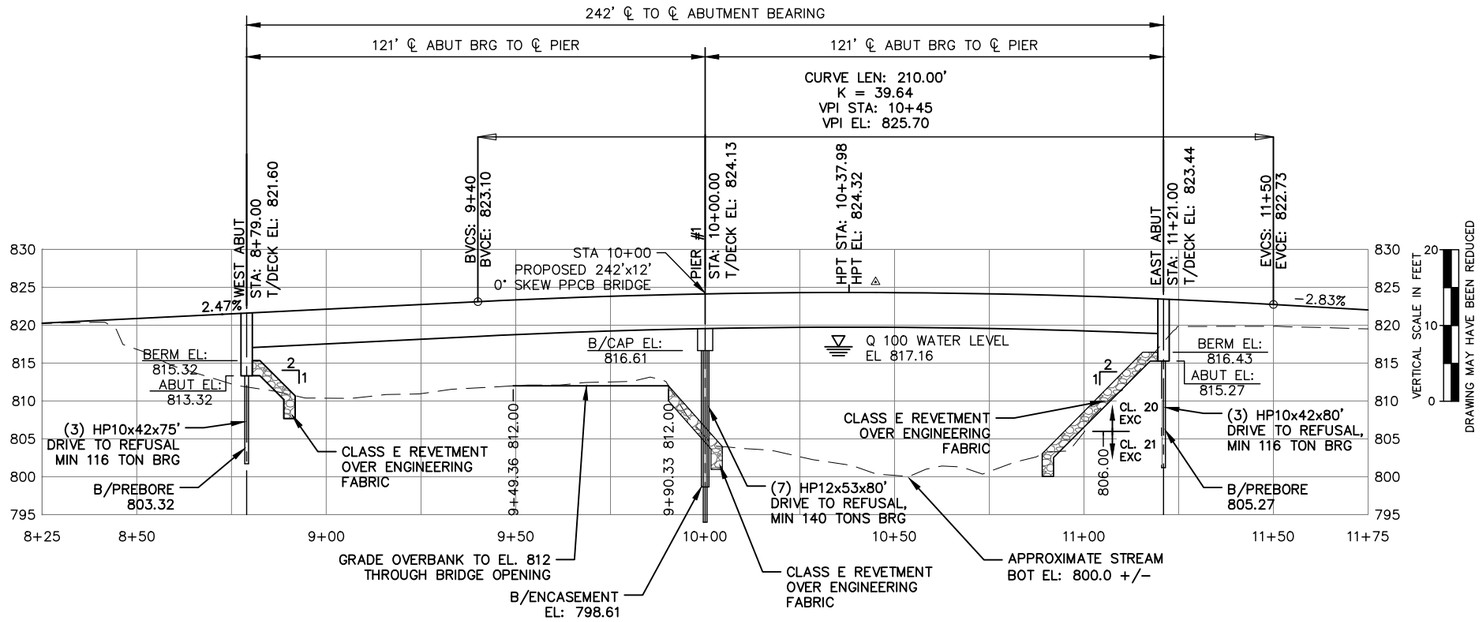

PROFILE

BENCH MARKS		
BENCHMARK NO.	ELEVATION	DESCRIPTION
40000	817.04	B.M. 1 RR SPIKE IN PP
40001	819.22	B.M. 2 RR SPIKE IN TREE

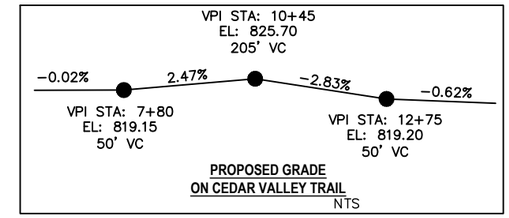

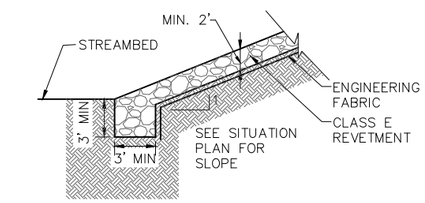

1 / V.1 REVETMENT TOE-IN DETAIL

ANY TEMPORARY STREAM CROSSING FOR CONSTRUCTION PURPOSES SHALL COMPLY WITH IA ADMINISTRATIVE CODE 567 72.1(6) a & b.

NOTES
PIER TYPE - PILE BENT ENCASED
CLASS E REVETMENT IS EMBEDDED.

LOCATION
BLACK HAWK COUNTY
T87N R12W, LAPORTE CITY
SE 1/4 SEC 25
OVER WOLF CREEK
42.318120 N, -092.190509 E

HYDRAULIC DATA

DRAINAGE AREA	326	SQ. MI.
MAIN CHANNEL SLOPE	3.2	FT./M.
DESIGN DISCHARGE	18465	CFS (100 YR)
DESIGN HIGH WATER	817.16	FT. ELEV (100 YR)
REACH SLOPE (LOCAL)	4.0	FT./M.
BRIDGE FLOW AREA	2200	SQ. FT. (100 YR)
DESIGN VELOCITY	8.4	FPS (100 YR)

Q_{50}	16000	CFS	NATURAL STAGE	816.44	FT.
Q_{100}	18465	CFS	NATURAL STAGE	816.96	FT.
CALCULATED DESIGN SCOUR (Q_{200}) = ELEV.				793.9	FT.
$Q_{OVERTOPPING}$	21000	CFS	MIN. ROAD ELEV	817.9	FT.
Q_{500}	23070	CFS	STAGE WITH BACKWATER	817.90	FT.
CALCULATED CHECK SCOUR (Q_{500}) = ELEV.				793.8	FT.

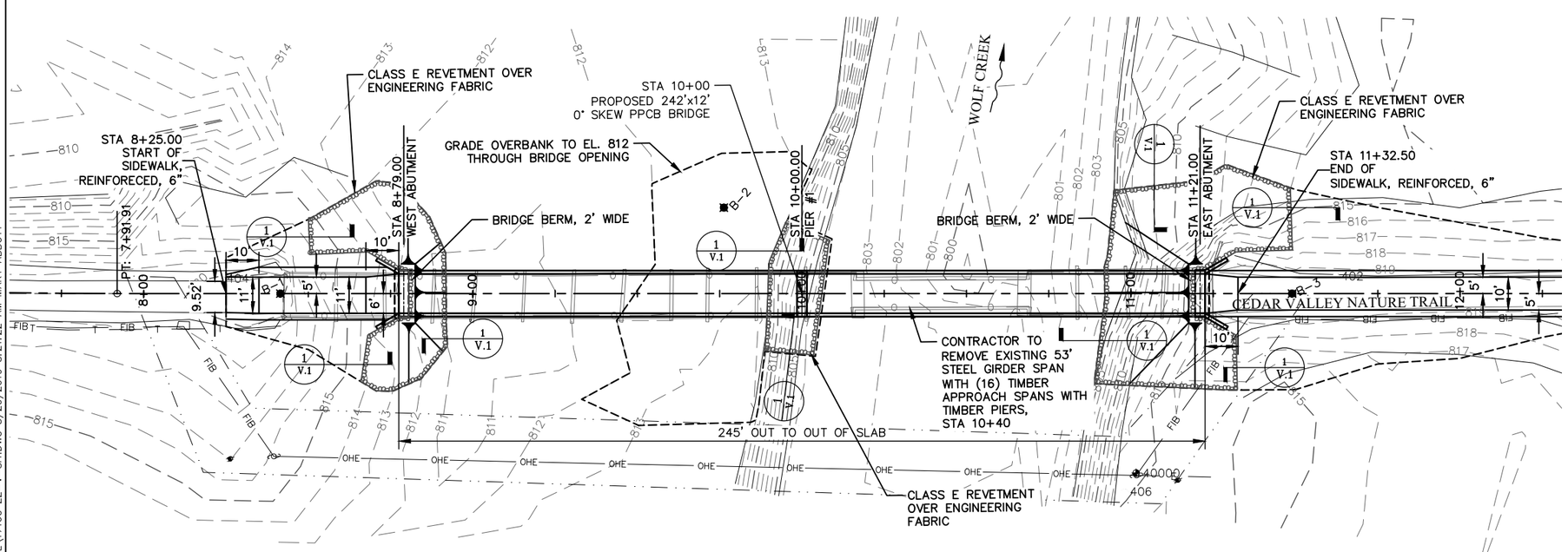

SITUATION PLAN

Design For
242'X12' 0° SKEW PPCB BRIDGE
CEDAR VLY NATURE TRAIL OVER WOLF CRK

SITUATION PLAN

Station:10+00 Date:.

BLACK HAWK COUNTY

DESIGNED BY: TRACED BY:
DETAILED BY: CHECKED BY:

iiw 563.556.2464 ◆ 800.556.4491 IIW, P.C. ◆ www.iiwengr.com

BLACK HAWK COUNTY | PROJECT NUMBER | TAP-R-C007(154)--8T-07

STATE	FED. ROAD DIST. NO.	FISCAL YEAR	SHEET NO.	TOTAL SHEETS
IOWA	.	2019	V.1	23

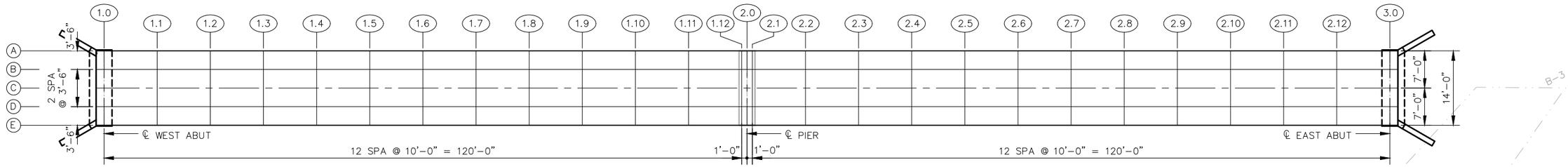

DECK ELEVATION LAYOUT GRID

NORTH

Grid Line		Line 1.0	Line 1.1	Line 1.2	Line 1.3	Line 1.4	Line 1.5	Line 1.6	Line 1.7	Line 1.8	Line 1.9	Line 1.10	Line 1.11	Line 1.12	Line 2.0	Line 2.1	Line 2.2	Line 2.3	Line 2.4	Line 2.5	Line 2.6	Line 2.7	Line 2.8	Line 2.9	Line 2.10	Line 2.11	Line 2.12	Line 3.0
Edge Line A	Top of Deck	821.49	821.74	821.99	822.23	822.48	822.73	822.97	823.21	823.42	823.61	823.77	823.91	824.02	824.03	824.04	824.12	824.17	824.20	824.21	824.19	824.14	824.07	823.98	823.85	823.71	823.54	823.34
Edge Line A	Edge Form Elev.	821.49	821.81	822.12	822.42	822.70	822.98	823.23	823.46	823.65	823.79	823.90	823.98	824.02		824.04	824.19	824.30	824.39	824.43	824.44	824.40	824.32	824.20	824.04	823.84	823.60	823.34
Beam Line B	Top of Deck	821.54	821.79	822.04	822.29	822.53	822.78	823.03	823.26	823.48	823.66	823.82	823.96	824.07	824.08	824.09	824.17	824.23	824.26	824.26	824.24	824.20	824.12	824.03	823.91	823.76	823.59	823.39
Beam Line B	BLH Elev.	821.04	821.36	821.67	821.97	822.26	822.53	822.78	823.01	823.20	823.35	823.45	823.53	823.57		823.59	823.74	823.86	823.94	823.98	823.99	823.95	823.87	823.75	823.59	823.39	823.16	822.89
Centerline Haunch, inches		2.75	2.30	1.91	1.63	1.50	1.54	1.78	2.09	2.29	2.37	2.29	2.02	1.51		1.74	2.60	3.22	3.64	3.91	4.05	4.08	4.01	3.83	3.52	3.06	2.40	1.50
Addt'l Haunch Reinforcing		Yes	Yes						Yes	Yes	Yes	Yes	Yes				Yes	Yes	Yes	Yes	Yes	Yes	Yes	Yes	Yes	Yes	Yes	
Centerline C	Top of Deck	821.60	821.84	822.09	822.34	822.59	822.83	823.08	823.32	823.53	823.72	823.88	824.01	824.12	824.13	824.14	824.22	824.28	824.31	824.31	824.29	824.25	824.18	824.08	823.96	823.81	823.64	823.44
Centerline C	Station	8+79.00	8+89.00	8+99.00	9+09.00	9+19.00	9+29.00	9+39.00	9+49.00	9+59.00	9+69.00	9+79.00	9+89.00	9+99.00	10+00.00	10+01.00	10+11.00	10+21.00	10+31.00	10+41.00	10+51.00	10+61.00	10+71.00	10+81.00	10+91.00	11+01.00	11+11.00	11+21.00
Beam Line D	Top of Deck	821.54	821.79	822.04	822.29	822.53	822.78	823.03	823.26	823.48	823.66	823.82	823.96	824.07	824.08	824.09	824.17	824.23	824.26	824.26	824.24	824.20	824.12	824.03	823.91	823.76	823.59	823.39
Beam Line D	BLH Elev.	821.04	821.36	821.67	821.97	822.26	822.53	822.78	823.01	823.20	823.35	823.45	823.53	823.57		823.59	823.74	823.86	823.94	823.98	823.99	823.95	823.87	823.75	823.59	823.39	823.16	822.89
Centerline Haunch, inches		2.75	2.30	1.91	1.63	1.50	1.54	1.78	2.09	2.29	2.37	2.29	2.02	1.51		1.74	2.60	3.22	3.64	3.91	4.05	4.08	4.01	3.83	3.52	3.06	2.40	1.50
Addt'l Haunch Reinforcing		Yes	Yes						Yes	Yes	Yes	Yes	Yes				Yes	Yes	Yes	Yes	Yes	Yes	Yes	Yes	Yes	Yes	Yes	
Edge Line E	Top of Deck	821.49	821.74	821.99	822.23	822.48	822.73	822.97	823.21	823.42	823.61	823.77	823.91	824.02	824.03	824.04	824.12	824.17	824.20	824.21	824.19	824.14	824.07	823.98	823.85	823.71	823.54	823.34
Edge Line E	Edge Form Elev.	821.49	821.81	822.12	822.42	822.70	822.98	823.23	823.46	823.65	823.79	823.90	823.98	824.02		824.04	824.19	824.30	824.39	824.43	824.44	824.40	824.32	824.20	824.04	823.84	823.60	823.34

BLH = Beam Line Haunch Elevation = Top of Deck - Slab thickness + DL Deflection = Bottom of Slab Elevation Before Deck Placement

Edge Form Elev. = Top of Deck Elevation at edge + DL Deflection

Addt'l haunch reinforcing required where haunch exceeds 2.0". See detail this sheet. Adjust locations based on measured field haunches as needed.

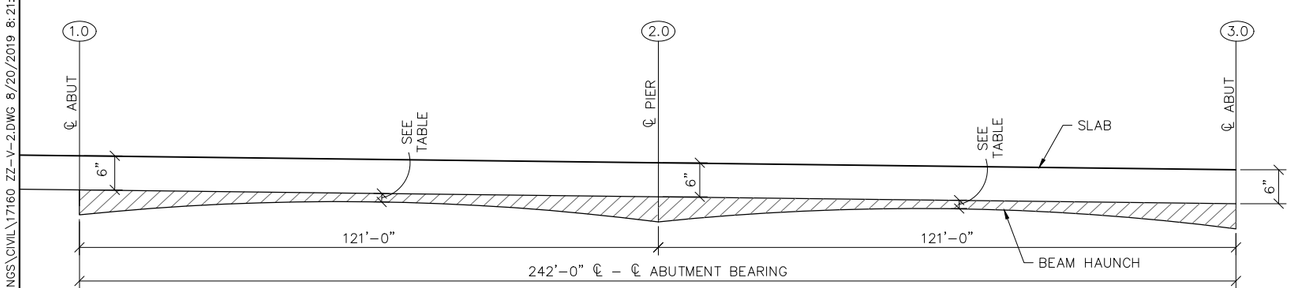

SLAB AND HAUNCH THICKNESS AT BEAMS

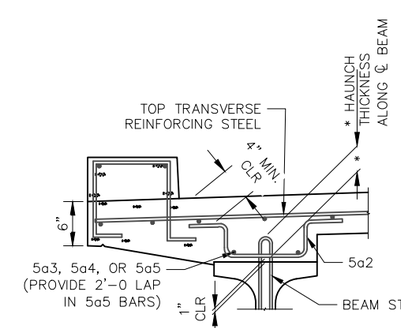

SECTION AT ADDITIONAL HAUNCH REINF

(SEE TABLE FOR LOCATIONS WHERE REQUIRED)

* IF HAUNCH THICKNESS EXCEEDS 4¼" THICKEN DECK TO MAINTAIN MAXIMUM 4¼" HAUNCH, 5a2 TO MATCH BEAM STIRRUP SPACING. ROTATE 5a2 FROM VERTICAL AT SMALLER HAUNCH LOCATIONS TO MAINTAIN 4" CLR. FROM TOP OF DECK.

Design For

242'X12' 0° SKEW PPCB BRIDGE
CEDAR VLY NATURE TRAIL OVER WOLF CRK

DECK ELEVATIONS

Station:10+00 Date:.

BLACK HAWK COUNTY

DESIGNED BY: DETAILED BY: TRACED BY: CHECKED BY:

iiw 563.556.2464 ◆ 800.556.4491 IIW, P.C. ◆ www.iiwengr.com

BLACK HAWK COUNTY

PROJECT NUMBER

TAP-R-C007(154)--8T-07

STATE	FED. ROAD DIST. NO.	FISCAL YEAR	SHEET NO.	TOTAL SHEETS
IOWA	.	2019	V.2	23

TAP-R-C007(154)--8T-07
P:\17\160\DRAWINGS\CIVIL\17160 ZZ-V-2.DWG 8/20/2019 8:21:48 AM MARY ABBOTT

TAP-R-C007(154)--8T-07

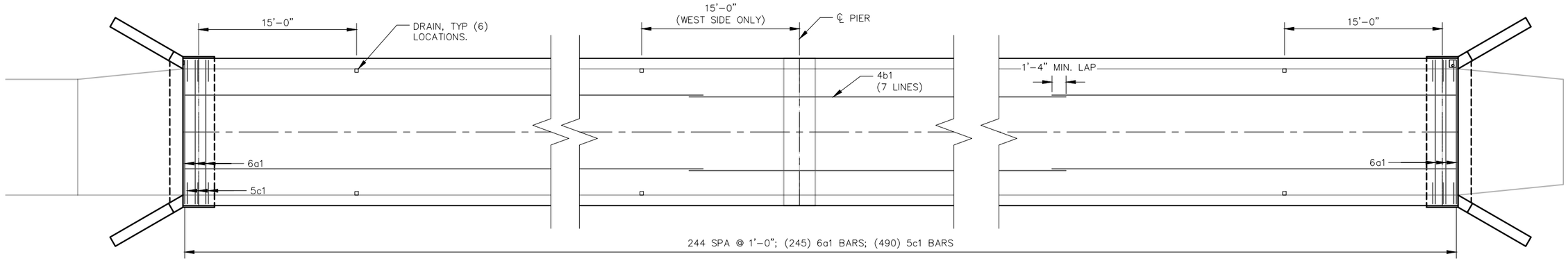

NORTH

PLAN LAYOUT

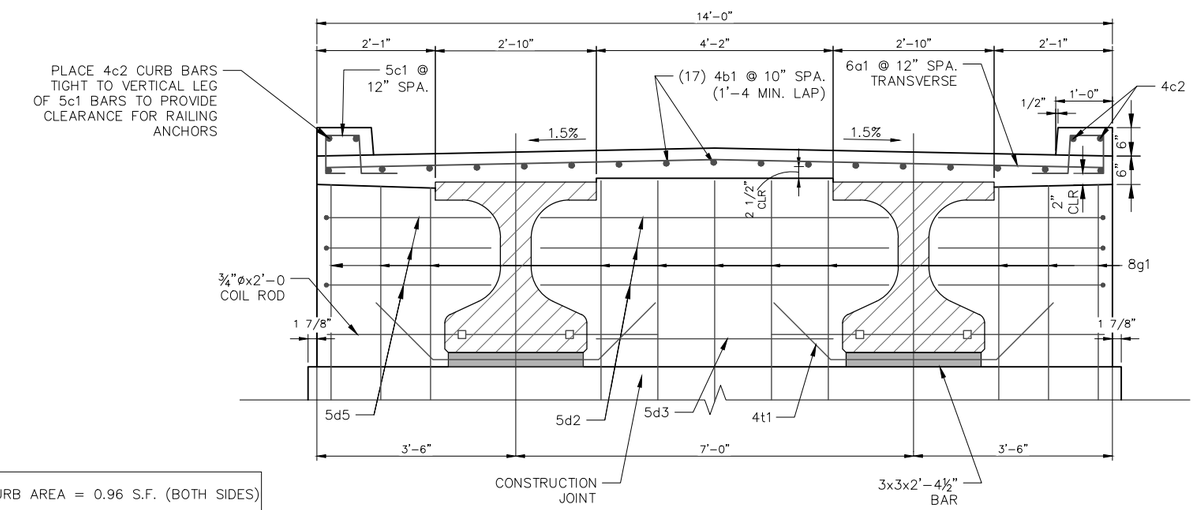

TRANSVERSE SECTION NEAR ABUTMENT

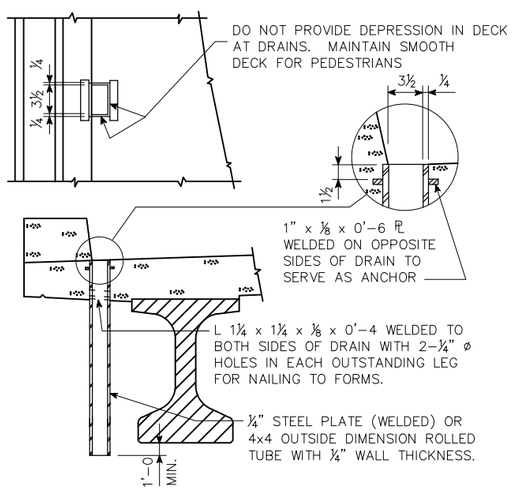

DRAIN DETAILS

NOTE :
DRAINS ARE TO BE GALVANIZED. (6) DRAINS REQUIRED. SEE PLAN ON THIS SHEET FOR LOCATION. WEIGHT OF DRAINS IS INCLUDED IN THE QUANTITY FOR "STRUCTURAL STEEL". WEIGHT IS BASED ON ROLLED TUBE.

DATA FOR ONE DRAIN	
BEAM SIZE	BTC
DRAIN WEIGHT (LBS.)	75*
DRAIN LENGTH (FT.)	5'-5¾

* NOTE NON-STANDARD 4x4 DRAIN SIZE

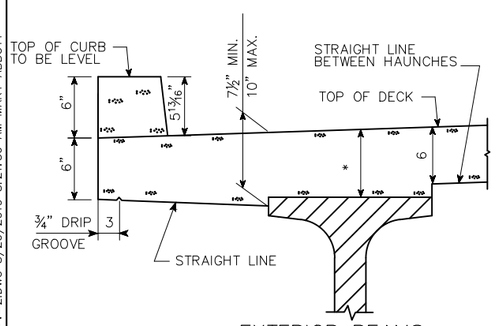

EXTERIOR BEAMS

TYPICAL DECK AND HAUNCH DETAIL

* FOR DECK THICKNESS OVER BEAMS SEE 'HAUNCH AND CAMBER DETAILS ON 'DESIGN SHEET V.2

CURB AREA = 0.96 S.F. (BOTH SIDES)

DECK AREA = 7.41 S.F.

DECK AREA DOES NOT INCLUDE HAUNCHES.

NOTE: FOR DETAILS OF INTERMEDIATE DIAPHRAGMS SEE DESIGN SHEET V.11

SUPERSTRUCTURE NOTES:

THE PIER AND ABUTMENT DIAPHRAGM CONCRETE IS TO BE PLACED MONOLITHICALLY WITH THE BRIDGE DECK.

COST OF ALL PREFORMED EXPANSION JOINT FILLER MATERIAL IS TO BE INCLUDED IN THE PRICE BID FOR "STRUCTURAL CONCRETE (BRIDGE)".

ALL BEAMS ARE TO BE SET VERTICAL.

FORMS FOR THE DECK ARE TO BE SUPPORTED BY THE PRESTRESSED CONCRETE BEAMS.

CLEAR DISTANCE FROM FACE OF CONCRETE TO NEAR REINFORCING BAR SHALL BE 2 INCHES UNLESS OTHERWISE NOTED OR SHOWN.

ALL DECK AND DIAPHRAGM REINFORCING IS TO BE WIRED IN PLACE AND ADEQUATELY SUPPORTED BEFORE CONCRETE IS PLACED.

REINFORCING STEEL IS TO BE SUPPORTED BY INDIVIDUAL BAR CHAIRS SPACED AT NOT MORE THAN 3'-0 CENTERS LONGITUDINALLY AND TRANSVERSELY, OR BY CONTINUOUS ROWS OF BAR HIGH CHAIRS OR DECK BOLSTERS SPACED 4'-0 APART. I.M. 451.01 REQUIREMENTS SHALL APPLY FOR BAR CHAIRS, BAR HIGH CHAIRS, AND DECK BOLSTERS.

COST OF BEARING MATERIAL IS TO BE INCLUDED IN THE PRICE BID FOR "PRETENSIONED PRESTRESSED CONCRETE BEAMS".

Design For
242'X12' 0° SKEW PPCB BRIDGE
CEDAR VLY NATURE TRAIL OVER WOLF CRK

PLAN AND SECTIONS

Station:10+00 Date:.

BLACK HAWK COUNTY

P:\17\160\DRAWINGS\CIVIL\17160 ZZ-V-2.DWG 8/20/2019 8:21:56 AM MARY ABBOTT

DESIGNED BY: DETAILED BY: TRACED BY: CHECKED BY:

iiw 563.556.2464 ◆ 800.556.4491 IIW, P.C. ◆ www.iiwengr.com

BLACK HAWK COUNTY | PROJECT NUMBER | TAP-R-C007(154)--8T-07

STATE	FED. ROAD DIST. NO.	FISCAL YEAR	SHEET NO.	TOTAL SHEETS
IOWA	.	2019	V.3	23

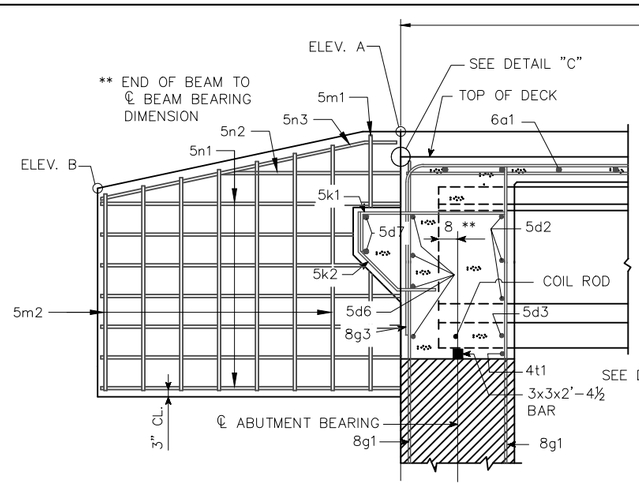

PART LONGITUDINAL SECTION NEAR GUTTER

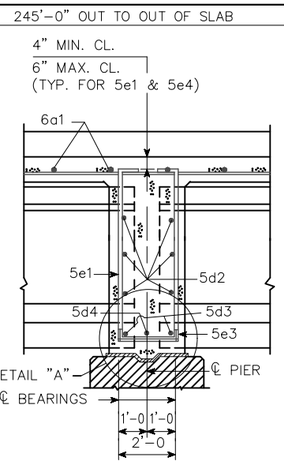

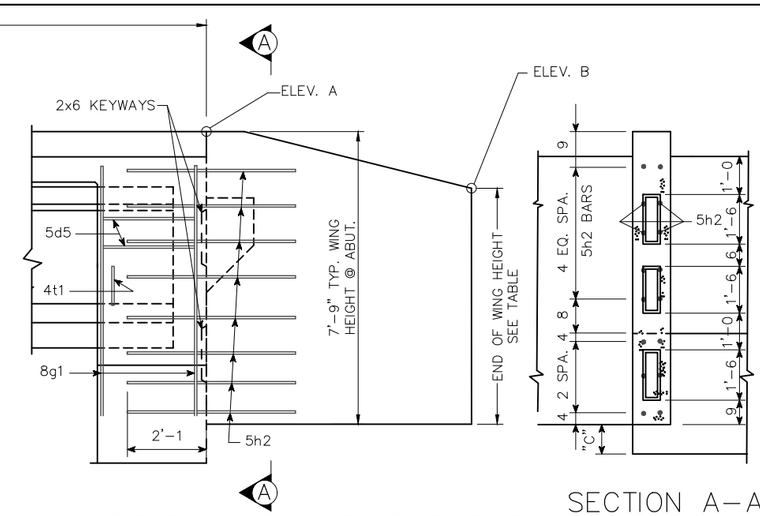

PART END VIEW AT ABUTMENT

SECTION A-A

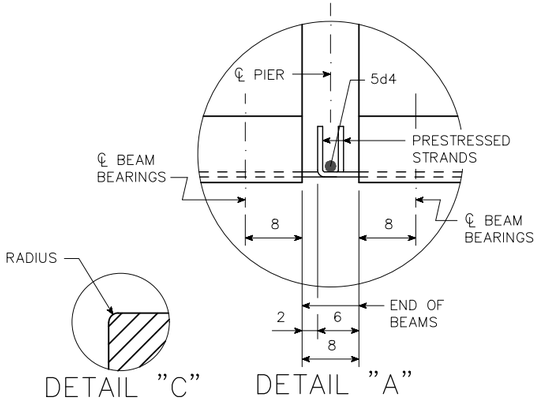

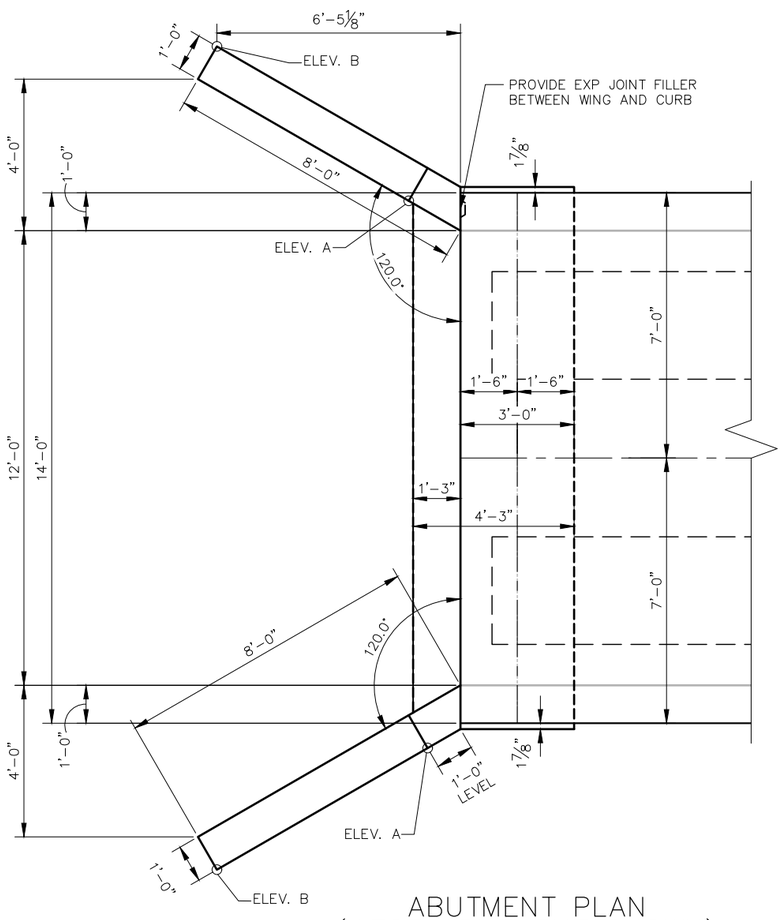

ABUTMENT PLAN
(WEST ABUTMENT SHOWN)

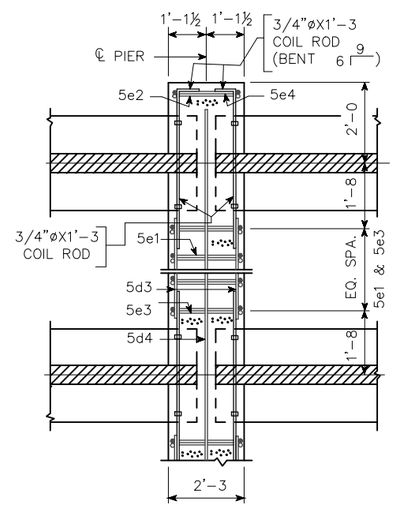

PART SECTION
AT PIER

(SEE CROSS SECTION THRU DECK FOR NUMBER OF DIAPHRAGM HOOP BARS BETWEEN BEAMS)

TABLE OF ABUTMENT ELEVATIONS

POINT	WEST ABUT.	EAST ABUT.
BEAM BEARINGS	816.82	818.77
BOTT. FTG. ELEV.	813.32	815.27

TABLE OF WINGWALL ELEVATIONS

LOCATION	DIM "C"	ELEV. A	ELEV. B	WING HT. AT END
S.W. CORNER	10 9/16"	821.95	820.50	6'-3⅝"
N.W. CORNER	10 9/16"	821.95	820.50	6'-3⅝"
S.E. CORNER	9½"	823.81	822.25	6'-2¼"
N.E. CORNER	9½"	823.81	822.25	6'-2¼"

Design For
242'X12' 0° SKEW PPCB BRIDGE
CEDAR VLY NATURE TRAIL OVER WOLF CRK

LONGITUDINAL SECTION

Station:10+00 Date:.

BLACK HAWK COUNTY

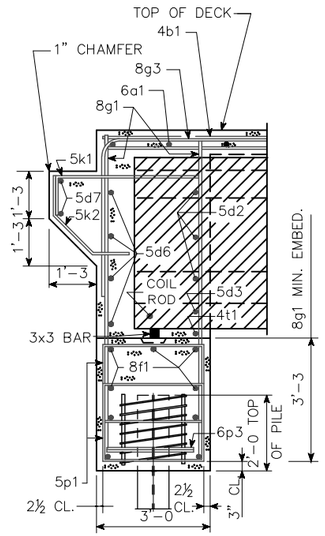

PART SECTION

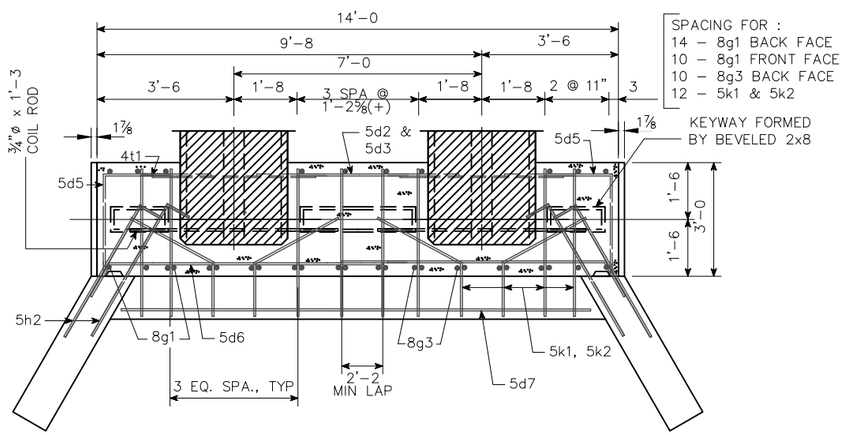

ABUTMENT PART PLAN

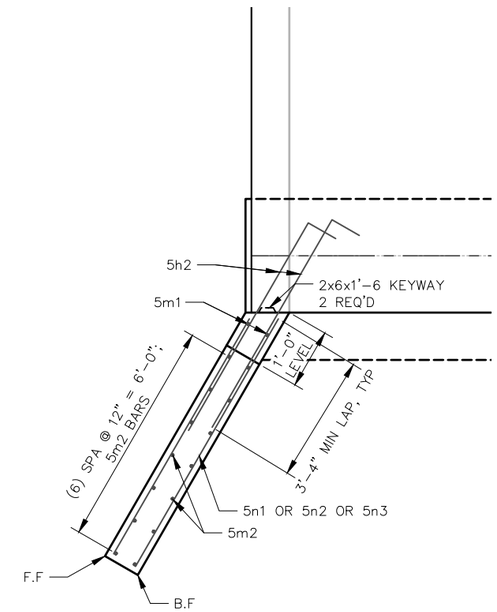

WING PART PLAN

NOTE: 3 - HP 10 x 42 STEEL BEARING PILING REQUIRED AT EACH ABUTMENT.

NOTE: RAIL NOT SHOWN IN DETAILS.

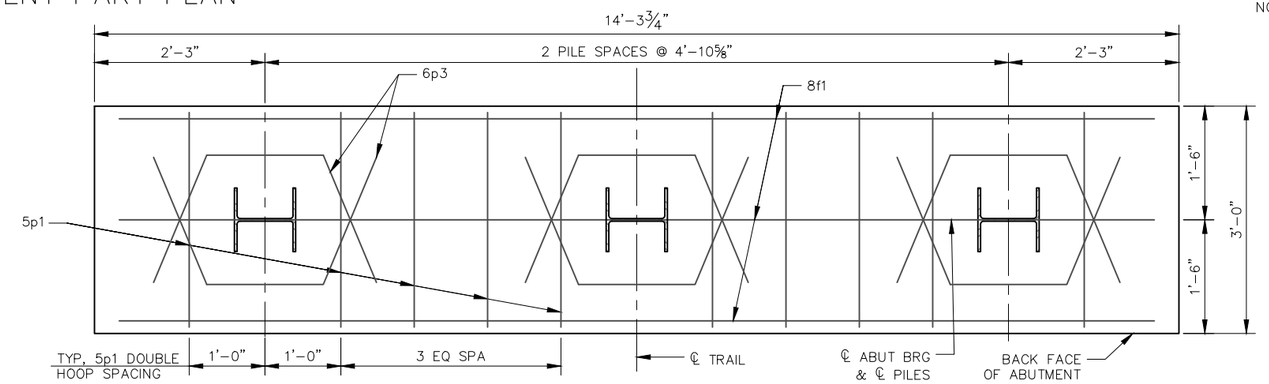

ABUTMENT PILE PLAN

ABUTMENT NOTES:

MINIMUM CLEAR DISTANCE FROM FACE OF CONCRETE TO NEAR REINFORCING BAR IS TO BE 2" UNLESS OTHERWISE NOTED OR SHOWN.

IF NECESSARY TO PREVENT DAMAGE TO THE END OF THE BRIDGE DECK OR BACKWALL FROM CONSTRUCTION EQUIPMENT, AN APPROPRIATE METHOD OF PROTECTION APPROVED BY THE ENGINEER SHALL BE PROVIDED BY THE BRIDGE CONTRACTOR AT NO EXTRA COST TO THE OWNER.

Design For
242'X12' 0° SKEW PPCB BRIDGE
CEDAR VLY NATURE TRAIL OVER WOLF CRK

ABUTMENT FOOTING & WING DETAILS

Station:10+00 Date:.

BLACK HAWK COUNTY

DESIGNED BY:	TRACED BY:	iiw 563.556.2464 ◆ 800.556.4491 IIW, P.C. ◆ www.iiwengr.com	BLACK HAWK COUNTY	PROJECT NUMBER	TAP-R-C007(154)--8T-07	STATE	FED. ROAD DIST. NO.	FISCAL YEAR	SHEET NO.	TOTAL SHEETS
DETAILED BY:	CHECKED BY:					IOWA	.	2019	V.5	23

P:\17\160\DRAWINGS\CIVIL\17160 ZZ-V-2.DWG 8/20/2019 8:22:05 AM MARY ABBOTT

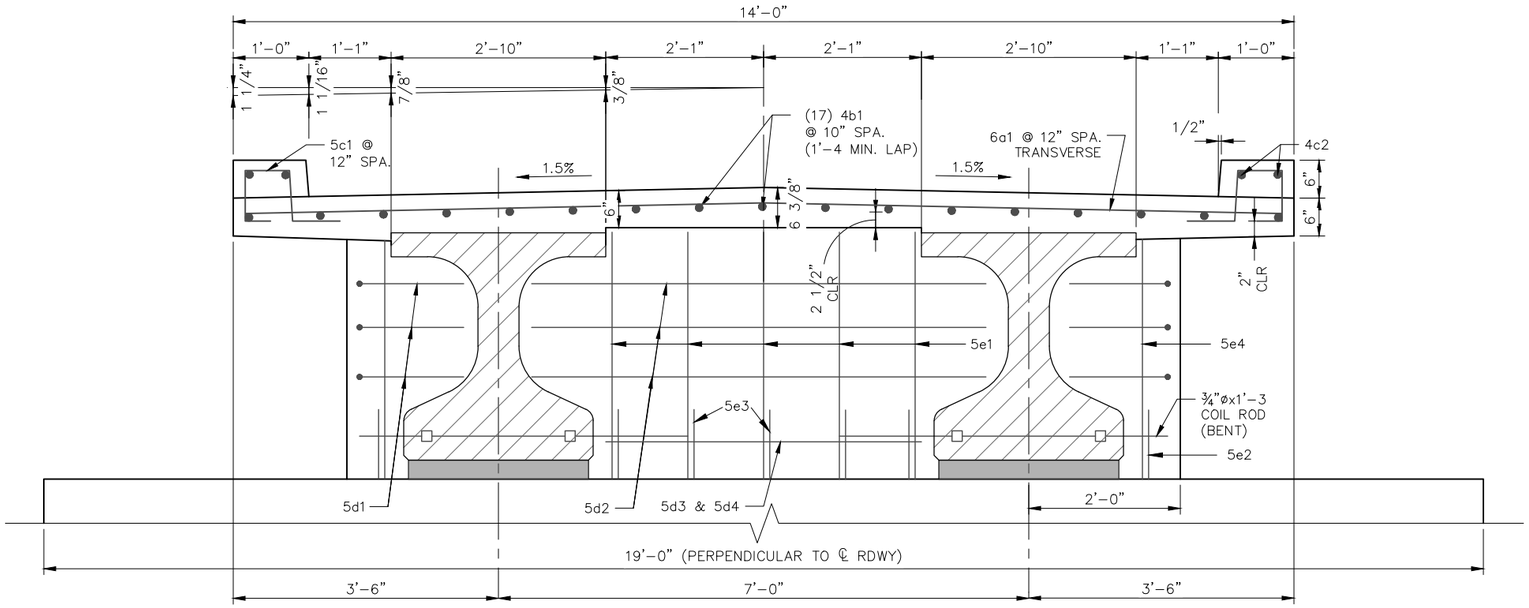

TRANSVERSE
SECTION NEAR PIER

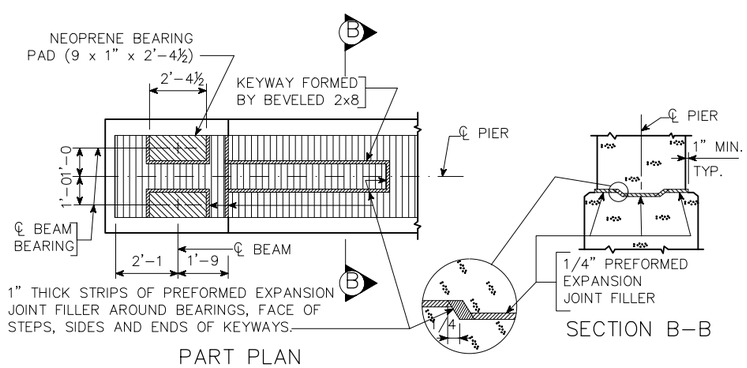

PART PLAN

SECTION B-B

TOP OF PIER DETAILS

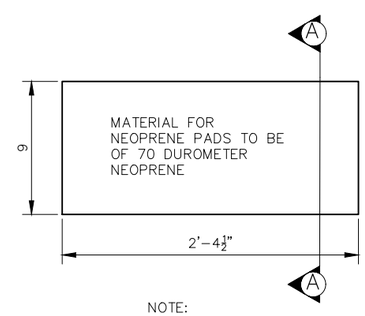

NOTE:
COST OF NEOPRENE PADS SHALL BE INCLUDED IN THE PRICE BID FOR "PRETENSIONED PRESTRESSED CONCRETE BEAMS".

FIXED PIER

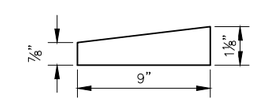

PLAIN NEOPRENE PAD
SECTION A-A

Design For
242'X12' 0° SKEW PPCB BRIDGE
CEDAR VLY NATURE TRAIL OVER WOLF CRK

PIER DETAILS

Station:10+00 Date:.

BLACK HAWK COUNTY

DESIGNED BY:	TRACED BY:	iiw 563.556.2464 ◆ 800.556.4491 IIW, P.C. ◆ www.iiwengr.com	BLACK HAWK COUNTY	PROJECT NUMBER	TAP-R-C007(154)--8T-07	STATE	FED. ROAD DIST. NO.	FISCAL YEAR	SHEET NO.	TOTAL SHEETS
DETAILED BY:	CHECKED BY:					IOWA	.	2019	V.6	23

P:\17\160\DRAWINGS\CIVIL\17160 ZZ-V-2.DWG 8/20/2019 8:22:10 AM MARY ABBOTT

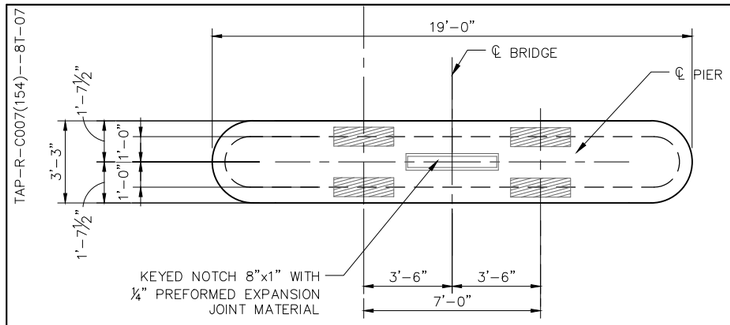

PIER PLAN

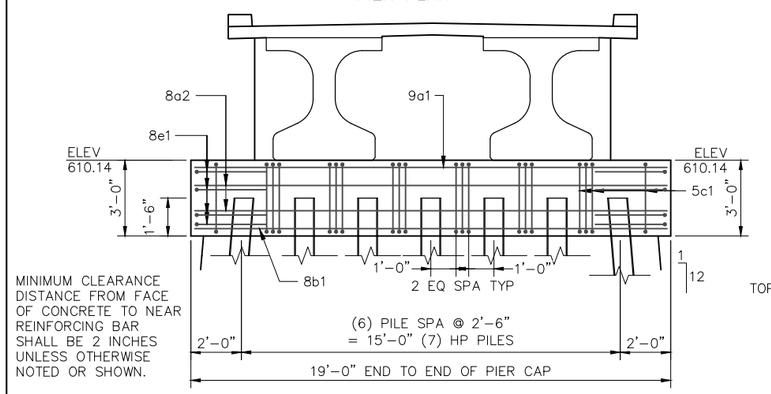

SECTION NEAR PIER
SHOWING NUMBER OF PILING

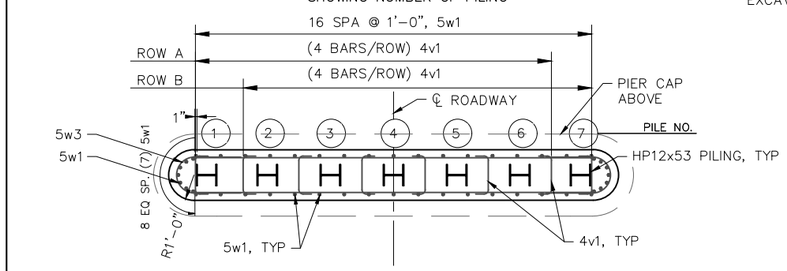

SECTION A-A

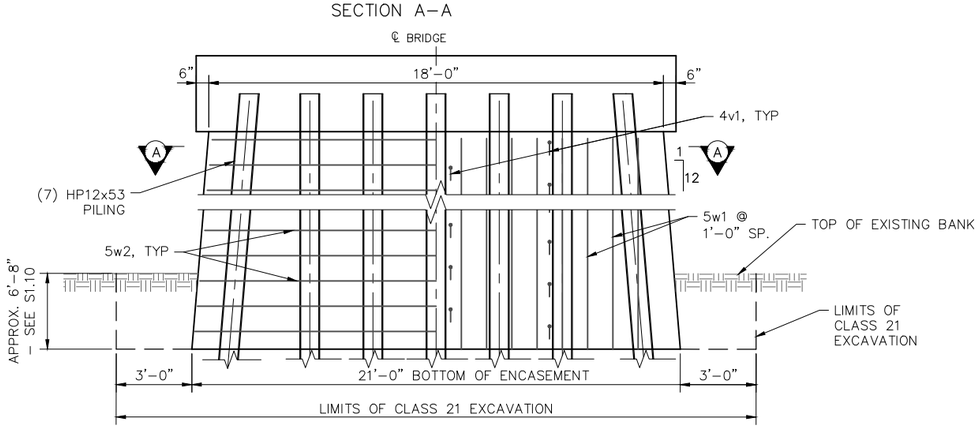

PIER ELEVATION
LOOKING UPSTATION

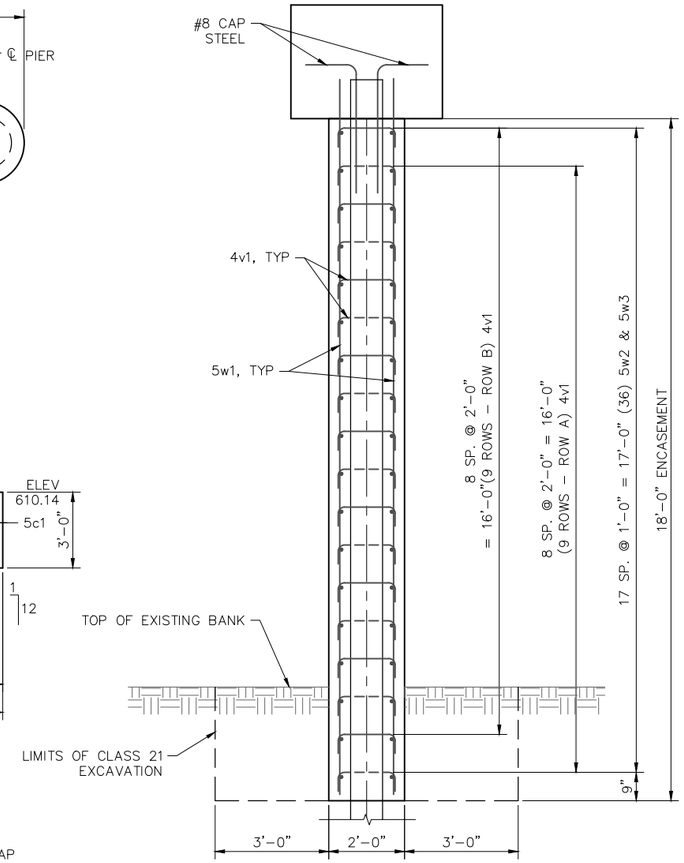

PIER SECTION

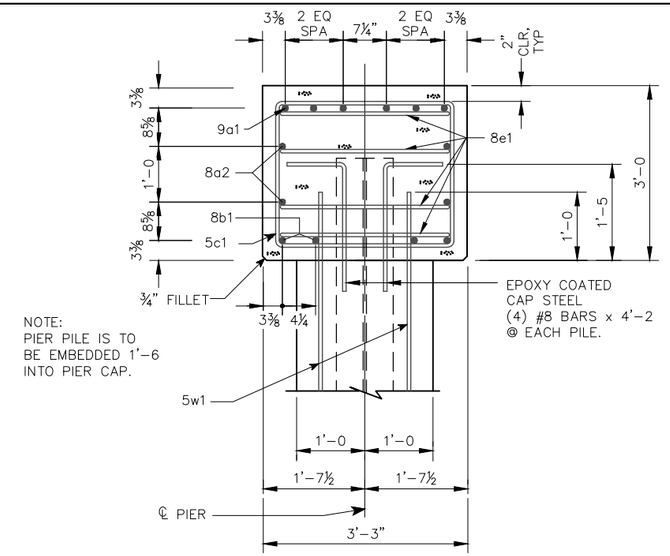

NOTE:
PIER PILE IS TO
BE EMBEDDED 1'-6
INTO PIER CAP.

TYPICAL CAP SECTION

PIER ELEVATIONS	
B/CAP	B/ENCASEMENT
816.61	798.61

ESTIMATED QUANTITIES- ONE ENCASED PIER

ITEM	UNIT	ENCASEMENT	CAP	TOTAL
STRUCTURAL CONCRETE (BRIDGE)	CY	25.4	6.6	32.0
REINFORCING STEEL	LB	1932	1494	3426
CLASS 21 EXCAVATION	CY			51

REINFORCING BAR LIST - PILE CAP

BAR	LOCATION	SHAPE	NO.	LENGTH ft. - in.	WEIGHT
9 a1	PILE CAP HORIZ., TOP		6	15 '-5	315
8 a2	PILE CAP HORIZ., SIDES		4	15 '-5	165
8 b1	PILE CAP HORIZ., BOTT.		4	15 '-5	165
5 c1	PILE CAP HOOPS		20	12 '-2	254
8 e1	PILE CAP HORIZ., AT ENDS		8	13 '-3	283
8	PILE CAP STEEL		28	4 '-2	312
	TOTAL EPOXY REINFORCING, ONE PIER PILE CAP				1494

REINFORCING BAR LIST - SOLID ENCASED PILE BENT PIER

BAR	LOCATION	SHAPE	NO.	LENGTH ft. - in.	WEIGHT
5 w1	WALL VERTICAL		48	18 '-9	939
5 w2	WALL HORIZONTAL, VARIES 16'-0 TO 18'-10		36	VARIES	654
5 w3	WALL HORIZONTAL - ENDS		36	5 '-10	219
4 v1	WALL TIES		72	2 '-6	120
	TOTAL EOPXY REINFORCING, ONE PIER ENCASEMENT				1932

BENT BAR DETAILS

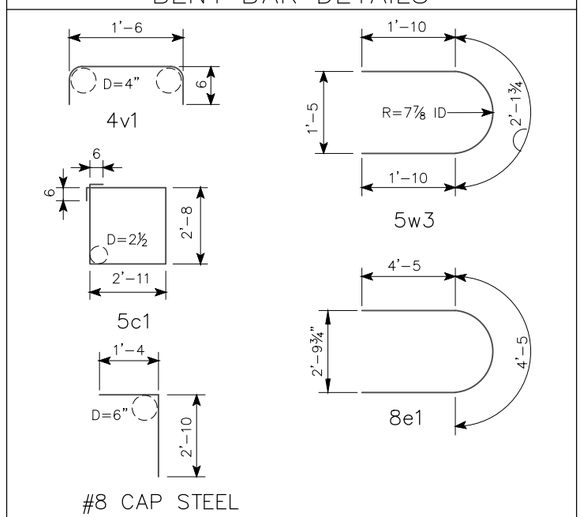

NOTE: DIMENSIONS ARE OUT TO OUT. D = PIN DIAMETER.

Design For
242'X12' 0° SKEW PPCB BRIDGE
CEDAR VLY NATURE TRAIL OVER WOLF CRK

PIER DETAILS

Station:10+00 Date:.

BLACK HAWK COUNTY

DESIGNED BY:
DETAILED BY:
TRACED BY:
CHECKED BY:

iiw 563.556.2464 ◆ 800.556.4491
IIW, P.C. ◆ www.iiwengr.com

BLACK HAWK COUNTY | PROJECT NUMBER | TAP-R-C007(154)--8T-07

STATE	FED. ROAD DIST. NO.	FISCAL YEAR	SHEET NO.	TOTAL SHEETS
IOWA	.	2019	V.7	23

TAP-R-C007(154)--8T-07
P:\17\160\DRAWINGS\CIVIL\17160 ZZ-V-2.DWG 8/20/2019 8:22:17 AM MARY ABBOTT

TAP-R-C007(154)--8T-07

CONCRETE PLACEMENT QUANTITIES

LOCATION	QUANTITY
SLAB FROM FF-FF ABUTMENTS	65.59
HAUNCH FROM FF-FF ABUTMENTS *	10.45
ABUTMENT DIAPHRAGM - EAST	6.59
ABUTMENT DIAPHRAGM - WEST	6.59
ABUTMENT FOOTING - EAST	5.56
ABUTMENT FOOTING - WEST	5.56
(2) ABUTMENT WINGS - EAST	4.14
(2) ABUTMENT WINGS - WEST	4.14
(2) CURBS BF-BF ABUTMENTS	8.71
(2) PAVING NOTCHES	2.08
PIER DIAPHRAGM	2.95
TOTAL (CU. YDS.)	122.4

* HAUNCH QTY BASED ON AVERAGE HAUNCH THICKNESS OF 2½"

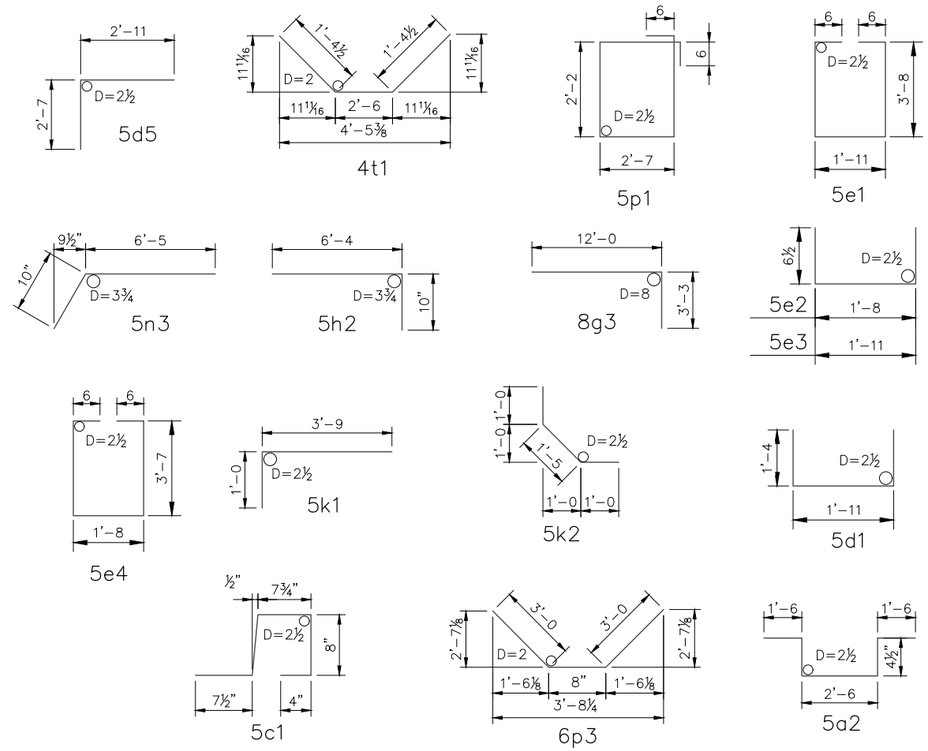

NOTE: ALL DIMENSIONS ARE OUT TO OUT. D= PIN DIAMETER.

BENT BAR DETAILS

REINFORCING BAR LIST - ONE SUPERSTRUCTURE AND TWO ABUTMENTS

EPOXY COATED REINFORCING

BAR	LOCATION	SHAPE	NO.	LENGTH ft. '- in.	WEIGHT
6 a1	SLAB, TRANV.		245	13 '- 8	5029
5 a2	HAUNCH REINF. VERTICALS*		252	6 '- 3	1643
5 a3	HAUNCH REINF. LONGITUDINAL @ W. ABUT*		4	15 '- 0	63
5 a4	HAUNCH REINF. LONGITUDINAL @ W. SIDE OF PIER*		4	40 '- 0	167
5 a5	HAUNCH REINF. LONGITUDINAL., EAST SPAN*		12	40 '- 0	501
4 b1	SLAB, LONGIT.		119	36 '- 2	2875
5 c1	CURB VERTICAL		490	2 '- 11	1491
4 c2	CURB LONGIT.		28	36 '- 2	676
5 d1	PIER DIAPH. ENDS		6	4 '- 7	29
5 d2	ABUT. AND PIER DIAPH. LONGIT.		12	6 '- 0	75
5 d3	ABUT. AND PIER DIAPH. LONGIT.		4	4 '- 1	17
5 d4	PIER DIAPH. LONGIT		1	10 '- 0	10
5 d5	ABUT. DIAPH. ENDS		12	5 '- 6	69
5 d6	ABUT. DIAPH. LONGIT. B.F.		8	13 '- 8	114
5 d7	PAVING NOTCH, LONGIT.		4	12 '- 4	51
5 e1	PIER DIAPH. HOOPS		5	10 '- 3	53
5 e2	PIER DIAPH. TIES ENDS		2	2 '- 9	6
5 e3	PIER DIAPH. TIES		5	3 '- 0	16
5 e4	PIER DIAPH. HOOPS ENDS		2	9 '- 10	21
8 f1	ABUT. FOOTING LONGIT.		18	13 '- 11	669
8 g1	ABUT. VERT. B.F. & F.F.		48	7 '- 8	983
8 g3	ABUT. DIAPH. VERT. B.F.		20	15 '- 3	814
5 h2	ABUT. TO WING ANCHOR		64	7 '- 2	478
5 k1	PAVING NOTCH		24	4 '- 9	119
5 k2	PAVING NOTCH		24	3 '- 5	86
5 m1	WING VERT. FULL HEIGHT		8	7 '- 5	62
5 m2	WING VERT. - VARIES 5'-8" TO 7'-0"		56	VARIES	370
5 n1	WING HORIZ.		56	6 '- 11	404
5 n2	WING HORIZ., TOP		8	4 '- 0	33
5 n3	WING HORIZ., TOP		8	7 '- 3	60
5 p1	ABUT. HOOPS		40	10 '- 6	438
6 p3	ABUT. BOTT. AT PILES		12	6 '- 8	120
4 t1	UNDER BEAMS AT ABUTMENTS		4	5 '- 3	14
# 2	PILE SPIRAL**		6	38 '- 6	39
	L 7/8 x 7/8 x 1/8 x 0.70**		18	1 '- 10	23
	TOTAL REINFORCING STEEL EPOXY COATED				17618

ESTIMATED STRUCTURE QUANTITIES

ITEM CODE	BID ITEM DESCRIPTION	UNITS	SUPERSTR. & 2 ABUTS.	ONE PIER	TOTAL
2402-2720000	EXCAVATION, CLASS 20	CY	48		48
2402-2721000	EXCAVATION, CLASS 21	CY		51	51
2403-0100010	STRUCTURAL CONCRETE (BRIDGE)	CY	122.4	32.0	154.4
2404-7775005	REINFORCING STEEL, EPOXY COATED	LB	17,618	3,426	21,044
2407-0563120	BEAMS, PRETENSIONED PRESTRESSED CONCRETE, BTC120	EACH	4		4
2408-7800000	STRUCTURAL STEEL	LB.	1,032		1,032
2501-0201042	PILES, STEEL, HP 10 X 42	LF	465		465
2501-0201253	PILES, STEEL, HP 12 X 53	LF		560	560
2501-6335010	PREBORE HOLES	LF	60		60
2519-1002042	FENCE, CHAIN LINK, 42 IN. HEIGHT	LF	519.5		519.5

Design For
242'X12' 0° SKEW PPCB BRIDGE
CEDAR VLY NATURE TRAIL OVER WOLF CRK

BENT BAR DETAILS & QUANTITIES

Station:10+00 Date:.

BLACK HAWK COUNTY

P:\17\160\DRAWINGS\CIVIL\17160 ZZ-V-2.DWG 8/20/2019 8:22:18 AM MARY ABBOTT

DESIGNED BY: TRACED BY:
DETAILED BY: CHECKED BY:

iiw 563.556.2464 ◆ 800.556.4491 IIW, P.C. ◆ www.iiwengr.com

BLACK HAWK COUNTY | PROJECT NUMBER | TAP-R-C007(154)--8T-07

STATE	FED. ROAD DIST. NO.	FISCAL YEAR	SHEET NO.	TOTAL SHEETS
IOWA	.	2019	V.8	23

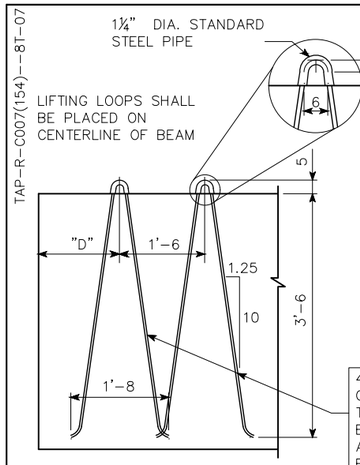

TYPICAL AT EACH END OF BEAM

4 – ½" NOMINAL DIA. GRADE 270 STRANDS THREADED THROUGH EACH PIPE SLEEVE BENT AS SHOWN AFTER THREADING. ALTERNATE LIFTING DEVICES MAY BE SUBMITTED FOR APPROVAL (SEE LIFTING LOOP TABLE).

LIFTING LOOP DETAIL

LIFTING LOOP AND OVERHANG TABLE				
BEAM	LIFTING LOOPS EACH END	# OF STRANDS PER LOOP	D	BEAM OVERHANG (FT)
BTC120	2	4	8'-3	14

LIFTING LOOPS SHALL CARRY LOADS EQUALLY.

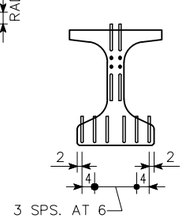

THE TOP AND BOTTOM ROWS OF THE DEFLECTED STRANDS ARE TO BE CUT WITH 1'-6 PROJECTIONS WHICH ARE TO BE SHOP BENT AS SHOWN. THE REMAINING TOP DEFLECTED STRANDS ARE TO BE CUT WITH 5" PROJECTIONS.
SIX BOTTOM STRANDS ARE TO BE CUT WITH 1'-6 PROJECTIONS WHICH ARE TO BE SHOP BENT AS SHOWN. THE REMAINING BOTTOM STRANDS ARE TO BE CUT OFF REASONABLY FLUSH WITH THE CONCRETE.

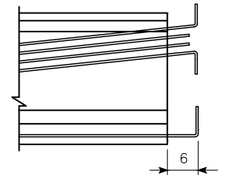

TYPICAL AT BOTH BEAM ENDS

STRAND PROJECTION AT BEAM ENDS WHEN EMBEDDED IN CONCRETE END DIAPHRAGMS

BTC120 BEAM DATA

	BTC BEAM	SPAN LENGTH ℄-℄ BEARING	OVERALL BEAM LENGTH (L)	CONCRETE STRENGTH f'ci (ksi)	CONCRETE STRENGTH f'c (ksi)	STRAND SIZE DIA. (in)	NO. OF STRAND STRAIGHT	NO. OF STRAND DEFLECTED	TOTAL INITIAL PRESTRESS ③ kips	HOLD DOWN FORCE-kips	CAMBER (in) AT RELEASE	CAMBER (in) AFTER LOSSES	DEFLECTION (in) Δ_D IMMEDIATE ① $^I\Delta$ (ELASTIC) STEEL DIAPHRAGM	DEFLECTION (in) Δ_D TIME ② $^T\Delta$ (PLASTIC) STEEL DIAPHRAGM	PERMISSIBLE MAXIMUM SPACING HL-93 LOADING STEEL DIAPHRAGM	WEIGHT (TONS)	CONCRETE (CU YD.)	REINFORCING STEEL (WEIGHT-LBS)
④	BTC120	120'-0	121'-4	8.00	9.00	0.60	38	12	2127	29.9	3.45	6.07	4.33	1.08	8'-9	43.7	21.7	3005

① DEFLECTIONS AT MID-SPAN DUE TO WEIGHT OF SLAB AND DIAPHRAGM. THE DEFLECTIONS SHOWN ARE FOR A SLAB (8 in) AND HAUNCH (1.5 in) WEIGHT OF:
0.93 kips/ft FOR 8'-9 BEAM SPACING
AND ONE STEEL DIAPHRAGM (0.500 kips) AT ℄ OF SPAN.
FOR DIFFERENT SLAB AND DIAPHRAGM WEIGHTS, DEFLECTIONS WILL BE DIRECTLY PROPORTIONAL.

② DEFLECTIONS DUE TO THE COMBINED EFFECT OF CREEP DUE TO WEIGHT OF SLAB AND SHRINKAGE OF SLAB.
TOTAL BEAM DEFLECTIONS AT ℄ OF SPAN, Δ_D , DUE TO WEIGHT OF SLAB AND DIAPHRAGMS FOR DETAILING PURPOSE:
(A) $\Delta_D = \Delta_I + \Delta_T$ FOR SIMPLE SPAN.
(B) $\Delta_D = \Delta_I + \frac{3}{4}\Delta_T$ FOR END SPANS OF CONTINUOUS BRIDGE.
(C) $\Delta_D = \Delta_I + \frac{1}{2}\Delta_T$ FOR INTERIOR SPANS OF CONTINUOUS BRIDGE.

③ TOTAL INITIAL PRESTRESS IS BASED ON 72.6% f's, f's. = 270 ksi. AND As = 0.217 in².

④ REQUIRES 4000 psi COMPRESSIVE STRENGTH FOR CAST-IN-PLACE SLAB CONCRETE.

CALCULATED DESIGN CAMBERS HAVE BEEN REDUCED FROM THEIR THEORETICAL VALUES BY 15% TO AID CONSTRUCTABILITY.

BEAM NOTES:

THIS BEAM IS DESIGNED FOR AASHTO LIVE LOADS AS INDICATED IN ABOVE TABLE WITH AN ALLOWANCE OF 20 LBS PER SQUARE FOOT OF ROADWAY FOR FUTURE WEARING SURFACE.

ALL PPC BEAMS SHALL USE HIGH PERFORMANCE CONCRETE (HPC) IN ACCORDANCE WITH THE STANDARD SPECIFICATIONS.

HOLD DOWN POINTS FOR DEFLECTED STRANDS MAY BE MOVED TOWARD ENDS OF BEAM A DISTANCE OF 0.05 L MAXIMUM AT PRODUCER'S OPTION.

ALL PRESTRESSING STRANDS EXCEPT LIFTING LOOP STRANDS SHALL BE 0.60 in. NOMINAL DIAMETER (NOMINAL STEEL AREA = 0.217 in²) AND CONFORM TO ASTM A416 GRADE 270 LOW RELAXATION STRANDS. MINIMUM STRAND BREAKING STRENGTH SHALL BE 58.6 kips.

TOPS OF BEAMS ARE TO BE STRUCK OFF LEVEL AND FINISHED AS PER MATERIALS IM570.

BEARINGS SHALL BE AS DETAILED ON OTHER DESIGN SHEETS.

BEAM TO BE USED IN BRIDGES MADE CONTINUOUS BY THE POURED IN PLACE FLOOR, ARE TO BE AT LEAST 28 DAYS OLD BEFORE THE FLOOR IS PLACED UNLESS A SHORTER CURING TIME IS APPROVED BY THE BRIDGE ENGINEER.

THE PORTIONS OF THE PRESTRESSED BEAM THAT ARE TO BE EMBEDDED IN THE ABUTMENT AND PIER DIAPHRAGMS SHALL BE ROUGHENED FOR A DISTANCE OF 10" FROM THE BEAM END BY SANDBLASTING OR OTHER APPROVED METHODS TO PROVIDE SUITABLE BOND BETWEEN THE BEAM AND THE DIAPHRAGM IN ACCORDANCE WITH ARTICLE 2403.03, I, OF THE STANDARD SPECIFICATIONS.

ALL BEAMS ARE TO BE INCREASED IN LENGTH TO COMPENSATE FOR ELASTIC SHORTENING, CREEP AND SHRINKAGE.

FOR TRANSPORTING, THE ALLOWABLE OVERHANG IS SHOWN IN THE LIFTING LOOP AND OVERHANG TABLE.

THE CONTRACTOR SHALL ASSURE THE LATERAL STABILITY OF THE BEAM DURING HANDLING, TRANSPORTING AND ERECTION BY PROVIDING TEMPORARY BRACING AS NEEDED.

HOLES MUST BE CAST IN THE WEB TO ACCOMMODATE THE STEEL DIAPHRAGM ATTACHMENTS AS DETAILED ON THE STEEL DIAPHRAGM DETAIL SHEET.

IF SOLE PLATE IS REQUIRED FOR BEARING, SOLE PLATE IS TO BE SET IN FORMS WHEN BEAM IS CAST AND FORMED OUT BELOW TO EXCLUDE CONCRETE AS DETAILED ON THE BEARING SHEET.

IF STUB ABUTMENTS ARE USED, ALL STRANDS AT THE END OF BEAM AT STUB ABUTMENTS SHALL BE CUT OFF REASONABLY FLUSH WITH THE CONCRETE.

MINIMUM CONCRETE f'c (AT 28 DAYS) AND MINIMUM f'ci AT RELEASE ARE LOCATED IN THE BTC120 BEAM DATA TABLE ABOVE.

FOUR 0.60 IN. DIAMETER STRANDS STRESSED TO NOT MORE THAN 5000 lbs EACH MAY BE USED IN LIEU OF BARS 5a1 AND 5a2 IN THE TOP FLANGE.

WHEN EXPANSION JOINTS ARE USED, CONCRETE SEALER SHALL BE APPLIED TO THE PRESTRESSED BEAM END SECTIONS. THE SEALING SHALL BE IN ACCORDANCE WITH MATERIALS I.M.570 (FABRICATOR APPLICATION) AND I.M.491.12 (CONTRACTOR APPLICATION).

NUMBER AND EXACT LOCATION OF COIL TIES TO BE AS DETAILED ON SPECIFIC BRIDGE DESIGN.

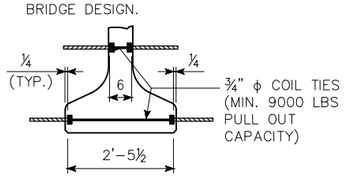

COIL TIE DETAIL

DESIGN STRESSES:

DESIGN STRESSES FOR THE FOLLOWING MATERIALS ARE TO BE IN ACCORDANCE WITH AASHTO LRFD BRIDGE DESIGN SPECIFICATIONS FOR HIGHWAY BRIDGES, SERIES OF 2007.
REINFORCING STEEL IN ACCORDANCE WITH SECTION 5, GRADE 60.
CONCRETE IN ACCORDANCE WITH SECTION 5.
PRESTRESSING STEEL IN ACCORDANCE WITH SECTION 5, GRADE 270.

SPECIFICATIONS:

CONSTRUCTION: STANDARD SPECIFICATIONS OF THE IOWA DEPARTMENT OF TRANSPORTATION, CURRENT SERIES, WITH CURRENT APPLICABLE SPECIAL PROVISIONS AND SUPPLEMENTAL SPECIFICATIONS.
DESIGN: A.A.S.H.T.O. LRFD, SERIES OF 2007, WITH MINOR MODIFICATIONS.

ALTERNATE BAR NOTES:

ALTERNATE BARS SHOWN IN BENT BAR DETAILS MAY BE USED IN LIEU OF REINFORCING BARS SHOWN IN BAR LIST. NO ADDITIONAL PAYMENT SHALL BE MADE FOR USE OF ALTERNATE BARS.

ΔΔ 5b1 AND 6b3 BARS TO BE EPOXY COATED
* 6b3 AND 6b4 BARS TO BE USED IN PAIRS

REINFORCING BAR LIST

	BEAM		BTC120	
	BAR	SHAPE	NO.	LENGTH
	5a1		12	23'-10
	5a2		12	40'-0
ΔΔ	5b1		97	9'-2
ΔΔ *	6b3		36	5'-0
*	6b4		24	4'-4
	4c1		155	2'-7
	4d1		117	6'-5
	4e1		24	3'-2
	4h1		6	8'-0

BENT BAR DETAILS

NOTE: ALL BAR DIMENSIONS ARE OUT TO OUT
D = PIN DIAMETER FOR BENDING (UNLESS OTHERWISE SHOWN)
#4 BAR D= 2"
#5 BAR D= 2½"
#6 BAR D= 4½"

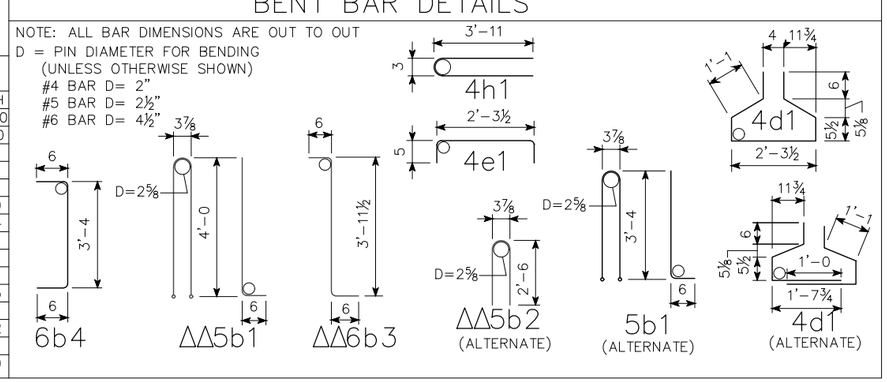

Design For
242'X12' 0° SKEW PPCB BRIDGE
CEDAR VLY NATURE TRAIL OVER WOLF CRK

BTC DETAILS

Station:10+00 Date:.

BLACK HAWK COUNTY

DESIGNED BY:	TRACED BY:	iiw 563.556.2464 ◆ 800.556.4491 IIW, P.C. ◆ www.iiwengr.com	BLACK HAWK COUNTY	PROJECT NUMBER	TAP-R-C007(154)--8T-07	STATE	FED. ROAD DIST. NO.	FISCAL YEAR	SHEET NO.	TOTAL SHEETS
DETAILED BY:	CHECKED BY:					IOWA	.	2019	V.9	23

P:\17\160\DRAWINGS\CIVIL\17160 ZZ-V-2.DWG 8/20/2019 8:22:25 AM MARY ABBOTT

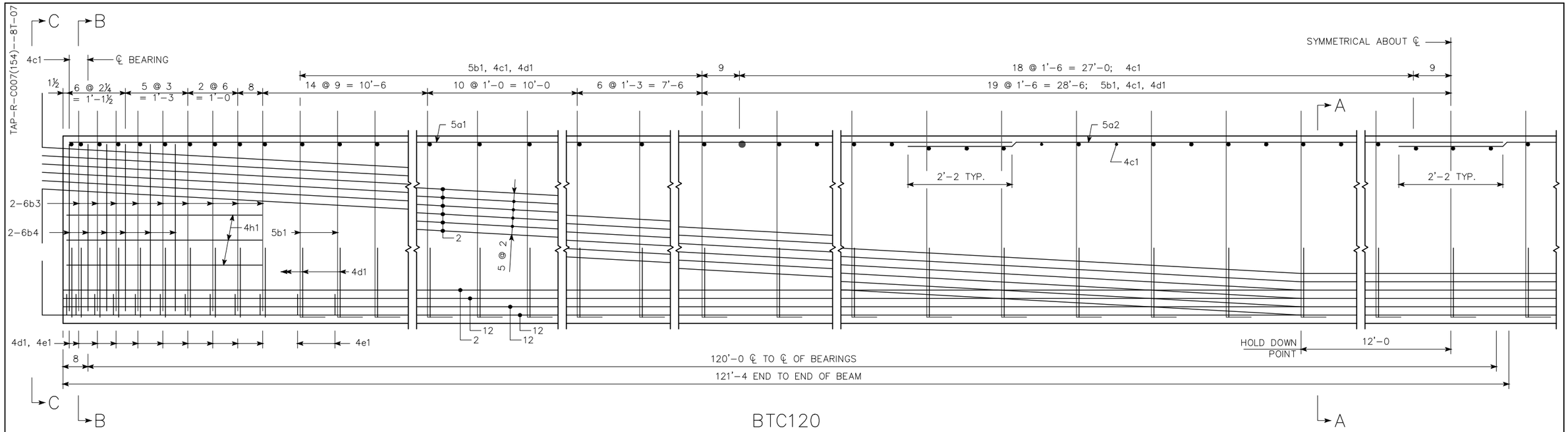

BTC120

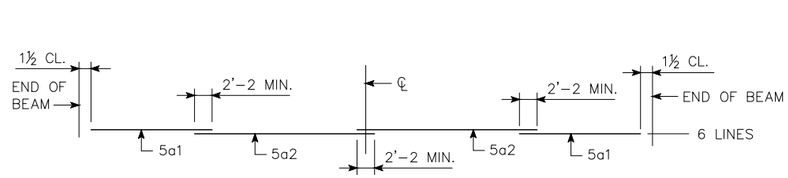

TOP FLANGE LONGITUDINAL BAR LAYOUT

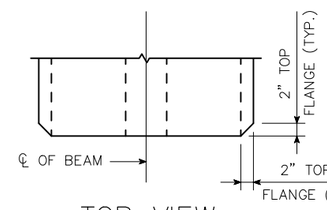

THE TOP FLANGE BEAM CORNERS ARE TO BE CHAMFERED 2" AS SHOWN AT BOTH ENDS OF THE BEAM

TOP VIEW

AREA = 691.8 in^2
$\bar{Y}_b$ = 20.74 in.
I = 178,971 in^4

BEAM SECTION PROPERTIES

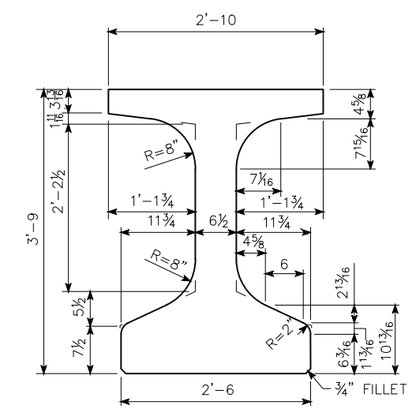

BTC BEAM CROSS SECTION

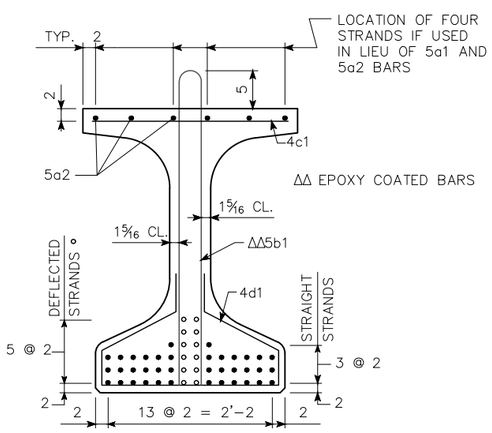

SECTION A-A

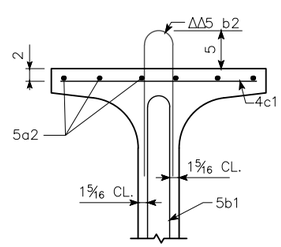

SECTION A-A (ALTERNATE)

SEE ALTERNATE BAR NOTE ON STANDARD SHEET V.9.

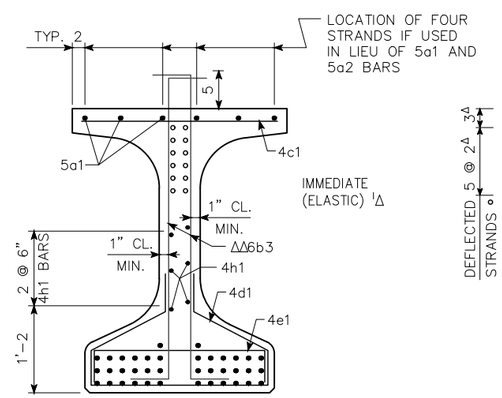

SECTION B-B

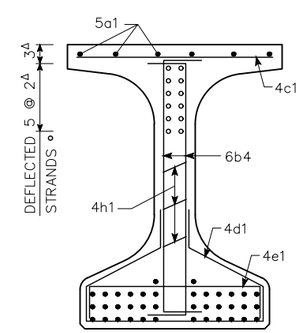

SECTION C-C

Design For
242'X12' 0° SKEW PPCB BRIDGE
CEDAR VLY NATURE TRAIL OVER WOLF CRK

BTC 120 BEAM DETAILS

Station:10+00 Date:.

BLACK HAWK COUNTY

P:\17\160\DRAWINGS\CIVIL\17160 ZZ-V-2.DWG 8/20/2019 8:22:30 AM MARY ABBOTT

DESIGNED BY:
DETAILED BY:
TRACED BY:
CHECKED BY:

iiw 563.556.2464 ◆ 800.556.4491
IIW, P.C. ◆ www.iiwengr.com

BLACK HAWK COUNTY

PROJECT NUMBER

TAP-R-C007(154)--8T-07

STATE	FED. ROAD DIST. NO.	FISCAL YEAR	SHEET NO.	TOTAL SHEETS
IOWA	.	2019	V.10	23

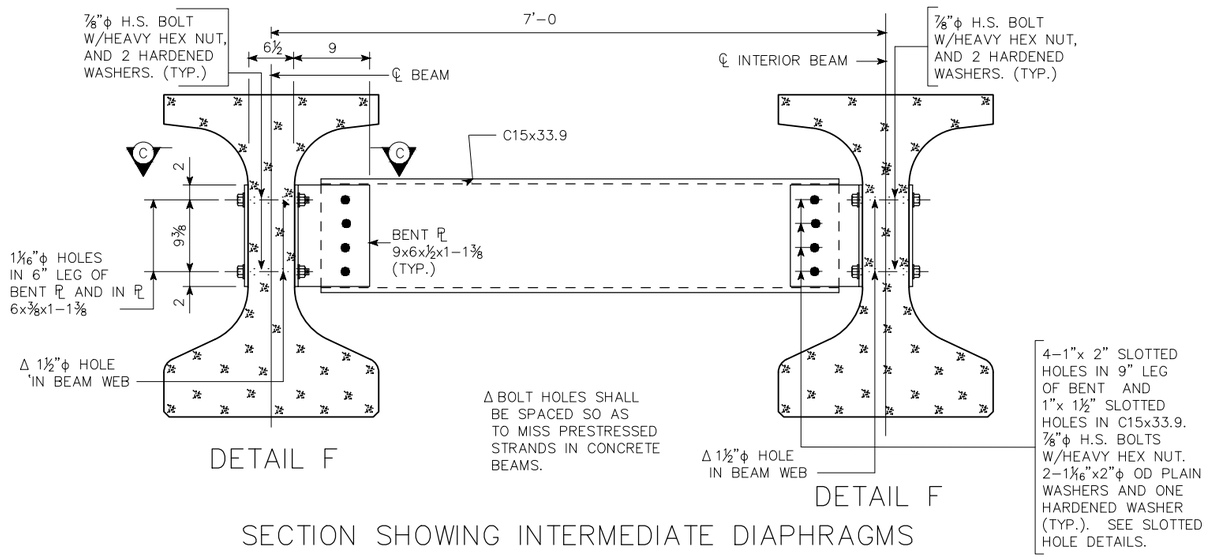

DETAIL F

DETAIL F

SECTION SHOWING INTERMEDIATE DIAPHRAGMS

BULB TEE "C" BEAM INTERMEDIATE DIAPHRAGM STRUCTURAL STEEL			
ONE BEAM CONNECTION ('DETAIL "F")			WEIGHT
		NO. OF BEAM CONNECTIONS	
2-⅞"ϕx9¼" H.S. BOLTS WITH NUTS & WASHERS = 4.8 LBS.		4	19.2
ONE DETAIL "F"	1-BACKING ℙ 6 x ⅜ x 1'-1⅜ = 8.5 LBS.	4	34.0
	1-BENT ℙ 9 x 6 x ½ x 1'-1⅜ = 28.5 LBS.	4	114.0
ONE DIAPHRAGM			
		NUMBER OF DIAPHRAGMS	
8-⅞"ϕ x 2¾" H.S.BOLTS WITH NUTS & WASHERS = 10.3 LBS.		2	20.6
	LENGTH OF MEMBER		
1-C15 x 33.9 = 33.9 LBS./FT.	5'-9¾"	2	394.1
INTERMEDIATE DIAPHRAGM STRUCTURAL STEEL - TOTAL (LBS.)			582

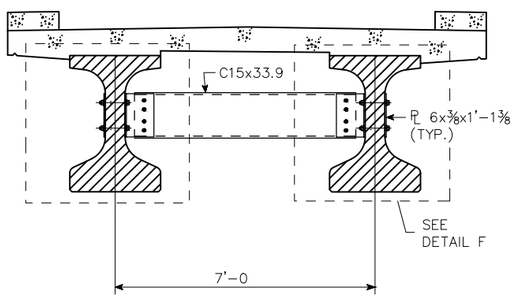

SECTION SHOWING INTERMEDIATE DIAPHRAGM

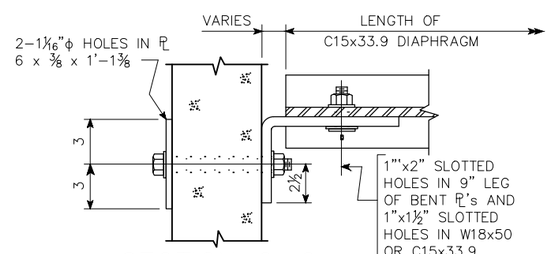

SECTION C-C

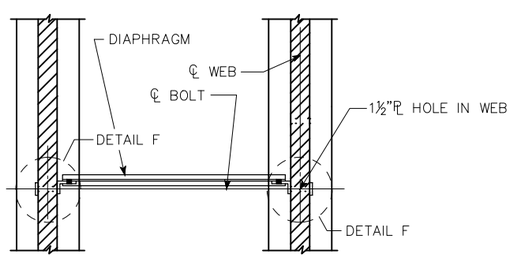

PART SECTION A-A

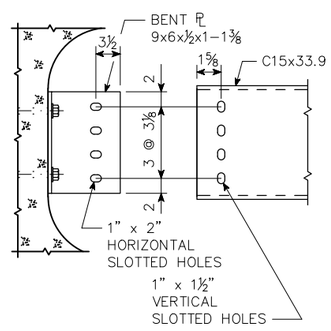

SLOTTED HOLE DETAILS

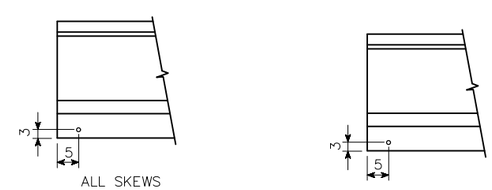

INTEGRAL ABUT.

FIXED PIER

BEAM COIL TIE LOCATIONS

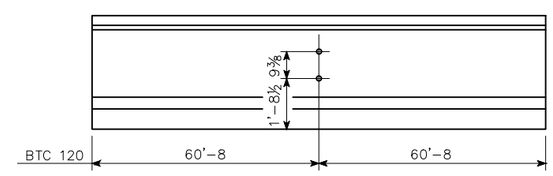

INTERMEDIATE DIAPHRAGM BOLT HOLE LOCATIONS

NOTES:

ALL DIAPHRAGM MATERIALS, INCLUDING BOLTS, NUTS AND WASHERS SHALL BE GALVANIZED.

SHOP DRAWINGS OF THE STEEL DIAPHRAGMS SHOWING LAYOUT AND DETAILS OF THE DIAPHRAGMS SHALL BE SUBMITTED FOR APPROVAL.

ALL COSTS FOR FURNISHING AND INSTALLING STEEL INTERMEDIATE DIAPHRAGMS SHALL BE INCLUDED IN THE PRICE BID FOR STRUCTURAL STEEL.

THE 1½"ϕ HOLES FOR THE ⅞"ϕ H.S. BOLTS SHALL BE CAST INTO THE WEB. DRILLING IS NOT ALLOWED.

THE ⅞"ϕ H.S. BOLTS THROUGH THE WEB SHALL HAVE A THREAD LENGTH OF 3" MIN. AND 4" MAX. AND SHALL MEET THE REQUIREMENTS OF ASTM A449.

ALL BOLTS ARE TO BE TIGHTENED PRIOR TO PLACING BRIDGE FLOOR CONCRETE.

Design For

242'X12' 0° SKEW PPCB BRIDGE
CEDAR VLY NATURE TRAIL OVER WOLF CRK

INTERMEDIATE DIAPHRAGM

Station:10+00 Date:.

BLACK HAWK COUNTY

TAP-R-C007(154)--8T-07

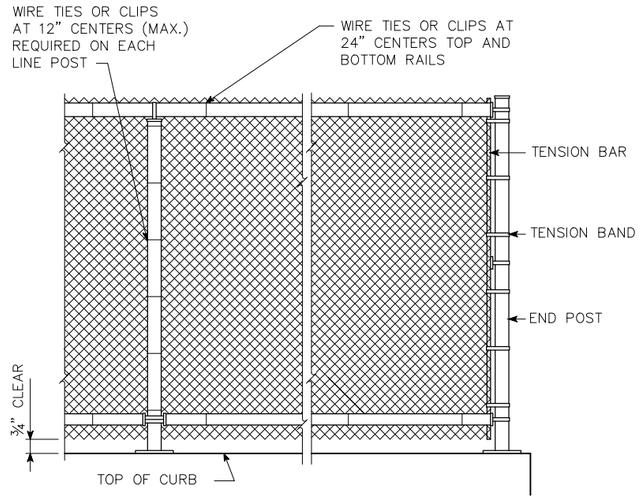

FENCE DETAILS

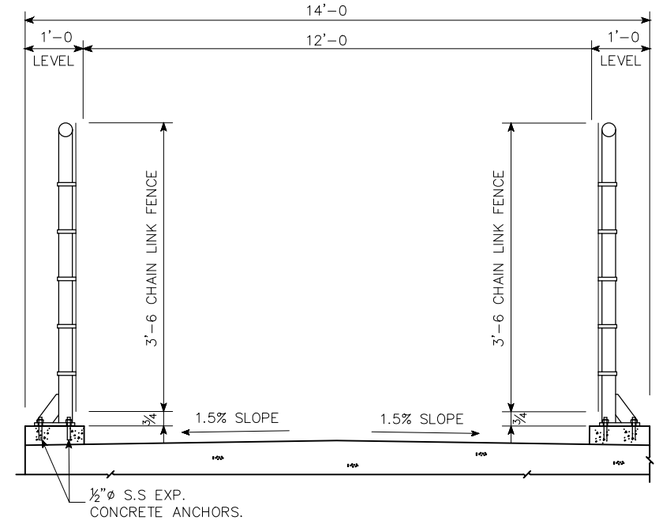

TYPICAL SECTION

QUANTITIES		
ITEM	UNITS	AMOUNT
CHAIN LINK FENCE, 42" HEIGHT	LIN. FT.	519'-6"

STEEL CHAIN LINK FENCE NOTES:

THE CHAIN LINK FENCE IS TO BE BID ON A LINEAR FOOT BASIS MEASURED FROM ℄ TO ℄ OF END POSTS. THE PRICE BID FOR "CHAIN LINK FENCE, 42" HEIGHT" SHALL BE FULL COMPENSATION FOR FURNISHING ALL MATERIAL, INCLUDING CONCRETE ANCHORS AND SHIMS, AND ALL OF THE EQUIPMENT AND LABOR REQUIRED TO ERECT THE FENCE IN ACCORDANCE WITH THESE PLANS AND SPECIFICATIONS.

THE CHAIN LINK FENCE SHALL BE EITHER ZINC OR ALUMINUM COATED FABRIC, 2" MESH, NO. 9 WIRES, 42" HEIGHT WITH KNUCKLED SELVAGES TOP AND BOTTOM.

THE CONCRETE EXPANSION ANCHORS SHALL BE STAINLESS STEEL AND HAVE A MINIMUM PULLOUT STRENGTH OF 4500 POUNDS BASED ON 4000 PSI CONCRETE.

THE MATERIAL FOR POSTS, BRACES AND RAILS SHALL BE STEEL PIPE IN ACCORDANCE WITH ARTICLE 4154.10, A, OF THE STANDARDS SPECIFICATIONS. BASE PLATES AND SHIMS SHALL MEET THE REQUIREMENTS OF ASTM A36. POSTS AND BASE PLATES SHALL BE GALVANIZED, AFTER FABRICATION, IN ACCORDANCE WITH THE REQUIREMENTS OF ASTM A123. SPECIAL FITTINGS SHALL BE IN ACCORDANCE WITH ARTICLE 4154.11, OF THE STANDARD SPECIFICATIONS, UNLESS OTHERWISE NOTED.

THE FENCE SHALL BE TRUE TO LINE, TAUT, AND COMPLY WITH THE BEST PRACTICE FOR FENCE CONSTRUCTION OF THIS TYPE. ALL ENDS OF WIRES SHALL BE TURNED SO THAT THEY EXTEND AWAY FROM THE SIDEWALK SIDE OF THE FENCE.

PROVIDE DETAIL BETWEEN ABUTMENT AND WING POSTS SO THAT FENCING PROHIBITS PASSAGE OF 4" SPHERE.

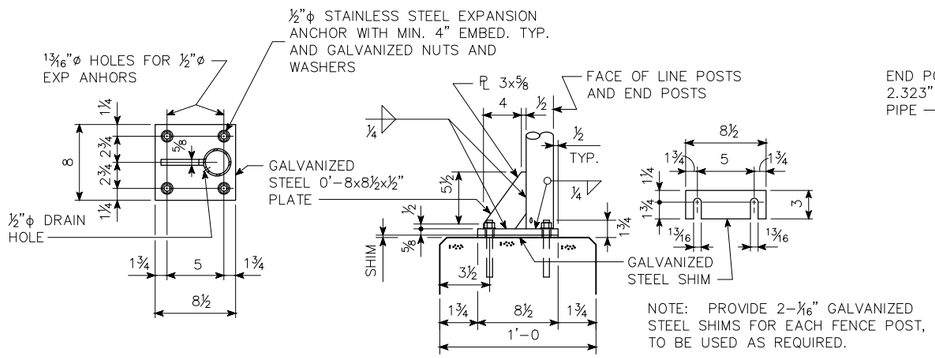

NOTE: PROVIDE 2-1/16" GALVANIZED STEEL SHIMS FOR EACH FENCE POST, TO BE USED AS REQUIRED.

BASE PLATE DETAILS FOR END POST AND LINE POSTS

NOTE : POSTS AND BASE PLATES SHALL BE GALVANIZED, AFTER FABRICATION, IN ACCORDANCE WITH THE REQUIREMENTS OF ASTM A123.

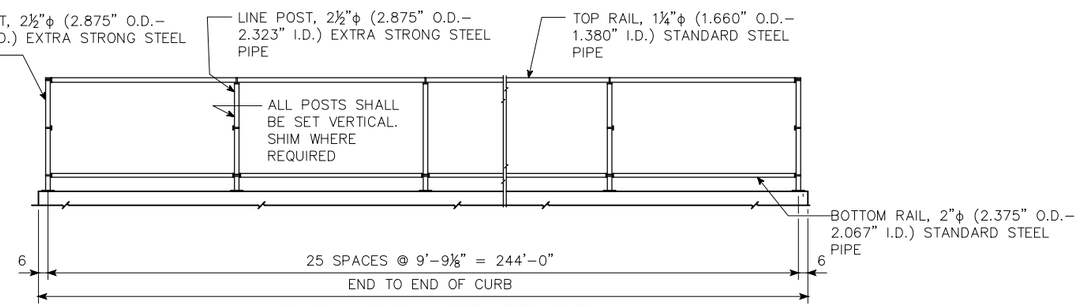

ELEVATION OF FENCE

NOTE : MAXIMUM ALLOWABLE POST SPACING IS 10'-0.

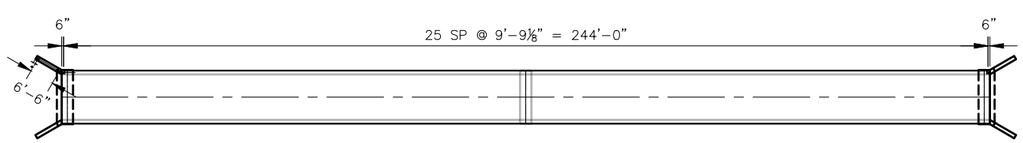

FENCE PLAN

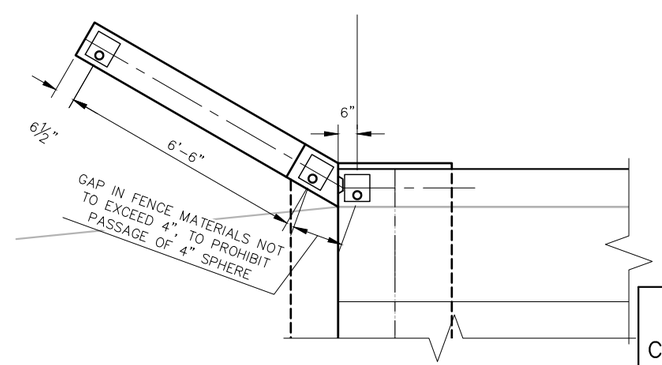

1 / V.12 BRIDGE TO WING FENCING DETAIL NOT TO SCALE

Design For
242'X12' 0° SKEW PPCB BRIDGE
CEDAR VLY NATURE TRAIL OVER WOLF CRK

CHAIN LINK FENCE DETAILS

Station:10+00 Date:.

BLACK HAWK COUNTY

P:\17\160\DRAWINGS\CIVIL\17160 ZZ-V-2.DWG 8/20/2019 8:22:41 AM MARY ABBOTT

DESIGNED BY:	TRACED BY:	iiw 563.556.2464 ◆ 800.556.4491 IIW, P.C. ◆ www.iiwengr.com	BLACK HAWK COUNTY	PROJECT NUMBER	TAP-R-C007(154)--8T-07	STATE	FED. ROAD DIST. NO.	FISCAL YEAR	SHEET NO.	TOTAL SHEETS
DETAILED BY:	CHECKED BY:					IOWA	.	2019	V.12	23

TAP-R-C007(154)--8T-07

ABUTMENT BACKFILL PROCESS:

THE BASE OF THE EXCAVATION SUBGRADE BEHIND THE ABUTMENT IS TO BE GRADED WITH A 4% SLOPE AWAY FROM THE ABUTMENT FOOTING AND A 2% CROSS SLOPE IN THE DIRECTION OF THE SUBDRAIN OUTLET. THIS EXCAVATION SHAPING IS TO BE DONE PRIOR TO BEGINNING INSTALLATION OF THE GEOTEXTILE AND BACKFILL MATERIAL.

AFTER THE SUBGRADE HAS BEEN SHAPED, THE GEOTEXTILE FABRIC SHALL BE INSTALLED IN ACCORDANCE WITH THE DETAILS SHOWN. THE FABRIC IS INTENDED TO BE INSTALLED IN THE BASE OF THE EXCAVATION AND EXTENDED VERTICALLY UP THE ABUTMENT BACKWALL, ABUTMENT WING WALLS, AND EXCAVATION FACE TO A HEIGHT THAT WILL BE APPROXIMATELY 1 TO 2 FOOT HIGHER THAN THE HEIGHT OF THE POROUS BACKFILL PLACEMENT AS SHOWN IN THE "BACKFILL DETAILS" ON THIS SHEET. THE STRIPS OF THE FABRIC PLACED SHALL OVERLAP APPROXIMATELY 1 FOOT AND SHALL BE PINNED IN PLACE. THE FABRIC SHALL BE ATTACHED TO THE ABUTMENT BY USING LATH FOLDED IN THE FABRIC AND SECURED TO THE CONCRETE WITH SHALLOW CONCRETE NAILS. THE FABRIC PLACED AGAINST THE EXCAVATION FACE SHALL BE PINNED.

WHEN THE FABRIC IS IN PLACE, THE SUBDRAIN SHALL BE INSTALLED DIRECTLY ON THE FABRIC AT THE TOE OF THE REAR EXCAVATION SLOPE. A SLOT WILL NEED TO BE CUT IN THE FABRIC AT THE POINT WHERE THE SUBDRAIN EXITS THE FABRIC NEAR THE END OF THE ABUTMENT WING WALL.

POROUS BACKFILL IS THEN PLACED AND LEVELED, NO COMPACTION IS REQUIRED.

THE REMAINING WORK INVOLVES BACKFILLING WITH GRANULAR BACKFILL.
THE BACKFILL SHALL BE PLACED IN INDIVIDUAL LIFTS, AND COMPACTED WITH VIBRATORY COMPACTION TO ENSURE FULL CONSOLIDATION. LIMIT THE LOOSE LIFTS TO NO MORE THAN 2 FEET OF THICKNESS.

THE COST OF SUBDRAINS, POROUS BACKFILL, GRANULAR BACKFILL, AND GEOTEXTILE FABRIC FURNISHED AT THE BRIDGE ABUTMENTS SHALL BE INCLUDED IN THE CONTRACT UNIT PRICE BID FOR STRUCTURAL CONCRETE.

NOTE:

SUBDRAIN SHALL SLOPE DOWNWARD 2% FROM ℄ APPROACH ROADWAY WHEN OUTLETTING BOTH SIDES OF THE ABUTMENT.

SUBDRAIN SHALL SLOPE DOWNWARD 2% FROM HIGH END WHEN OUTLETTING AT ONE END OF THE ABUTMENT.

SUBDRAIN NOTES:

THE BRIDGE CONTRACTOR IS TO INSTALL SUBDRAINS BEHIND THE ABUTMENT. THE SUBDRAINS SHALL BE 4" IN DIAMETER AND MEET THE REQUIREMENTS OF SECTION 4143.01. B OF THE CURRENT I.D.O.T. STANDARD SPECIFICATION. THE SUBDRAIN OUTLET SHALL CONSIST OF A 6'-0 LENGTH OF PIPE WITH A REMOVABLE RODENT GUARD.

THE DIMENSIONS SHOWN FOR THE PROPOSED SUBDRAINS ARE BASED ON THE PROPOSED GRADING LAYOUT OF BRIDGE BERMS. THE DIMENSIONS SHOWN ARE FOR ESTIMATING ONLY. REQUIRED LENGTHS AND GENERAL LOCATIONS OF SUBDRAINS ARE SUBJECT TO CHANGE DUE TO FIELD ADJUSTMENTS OF THE GRADING LAYOUT.

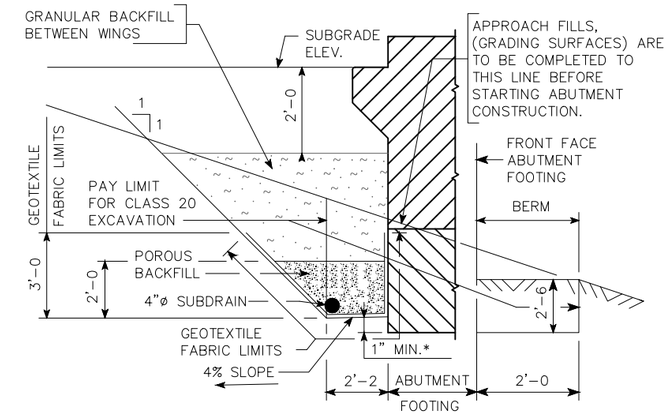

SECTION A-A

BACKFILL DETAILS

NOTE: GEOTEXTILE FABRIC WILL BE ATTACHED TO FACE OF ABUTMENT FOOTING AND WINGS.

*DIMENSION VARIES DUE TO 2% SUBDRAIN SLOPE.

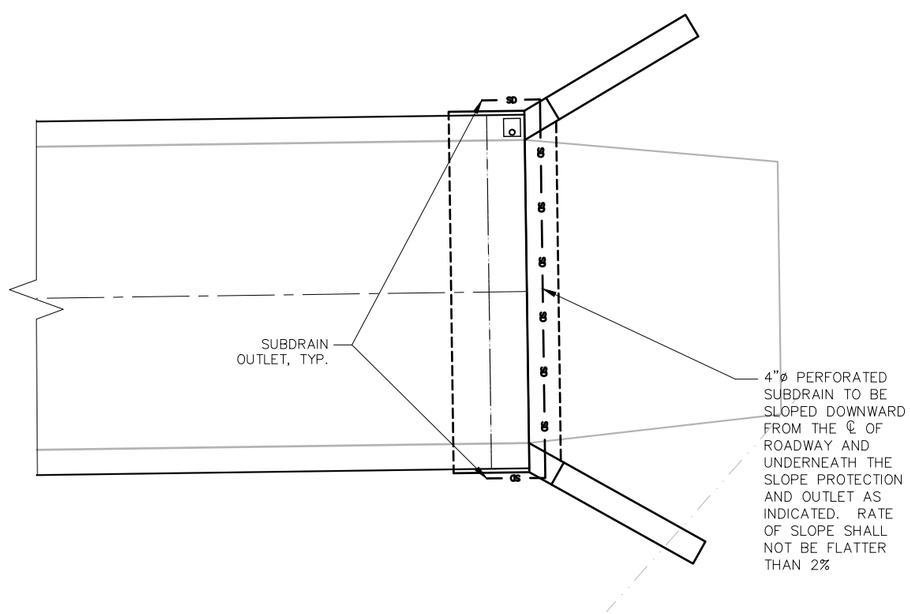

SUBDRAIN PLAN
(EAST SHOWN, WEST SIMILAR)

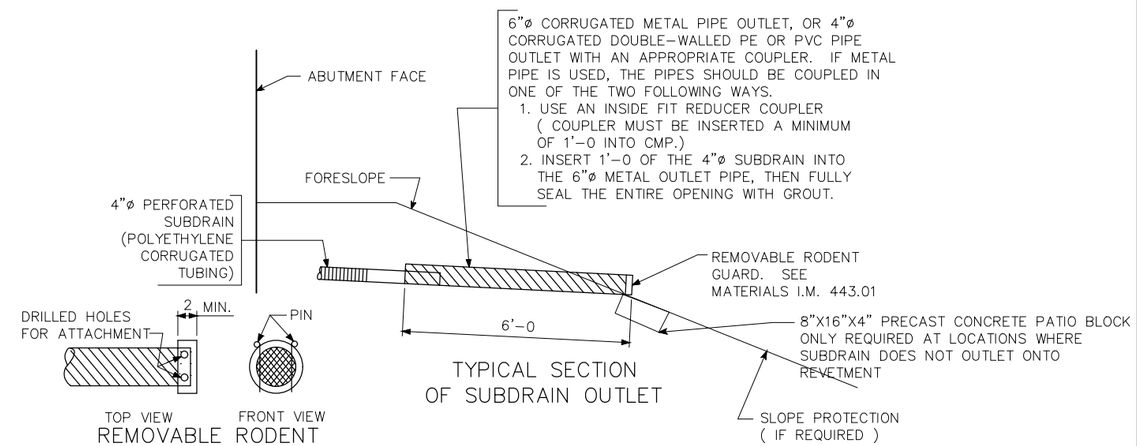

REMOVABLE RODENT GUARD DETAILS

TYPICAL SECTION OF SUBDRAIN OUTLET

OUTLET DETAILS

Design For
242'X12' 0° SKEW PPCB BRIDGE
CEDAR VLY NATURE TRAIL OVER WOLF CRK

ABUTMENT BACKFILL DETAILS

Station:10+00 Date:.

BLACK HAWK COUNTY

P:\17\160\DRAWINGS\CIVIL\17160 ZZ-V-2.DWG 8/20/2019 8:22:44 AM MARY ABBOTT

DESIGNED BY:	TRACED BY:	iiw 563.556.2464 ◆ 800.556.4491 IIW, P.C. ◆ www.iiwengr.com	BLACK HAWK COUNTY	PROJECT NUMBER	TAP-R-C007(154)--8T-07	STATE	FED. ROAD DIST. NO.	FISCAL YEAR	SHEET NO.	TOTAL SHEETS
DETAILED BY:	CHECKED BY:					IOWA	.	2019	V.13	23

TAP-R-C007(154)--8T-07

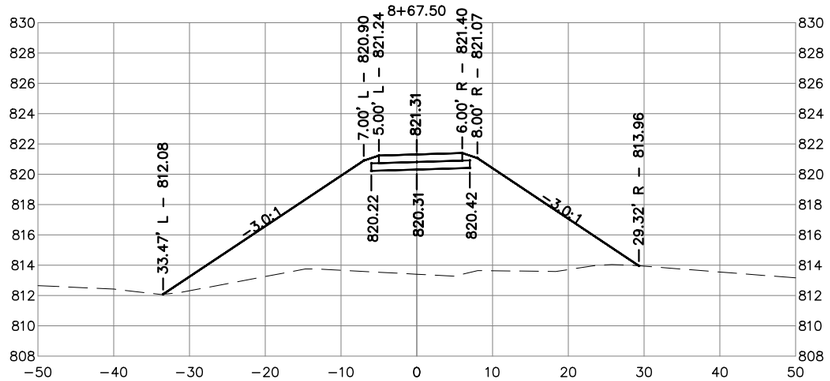

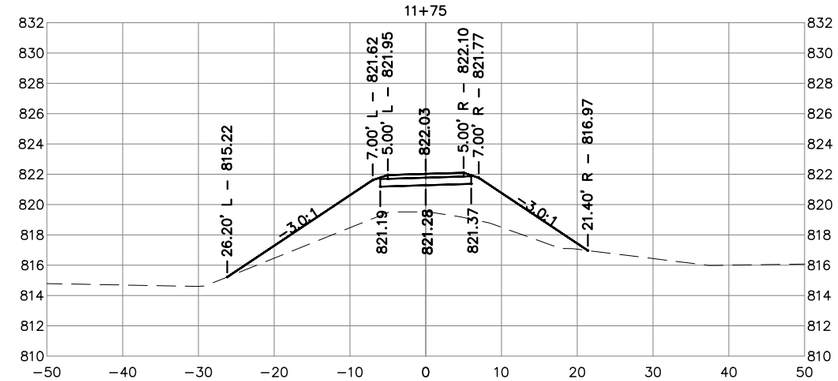

HORIZONTAL SCALE IN FEET
0 10 20
DRAWING MAY HAVE BEEN REDUCED

VERTICAL SCALE IN FEET
0 5 10
DRAWING MAY HAVE BEEN REDUCED

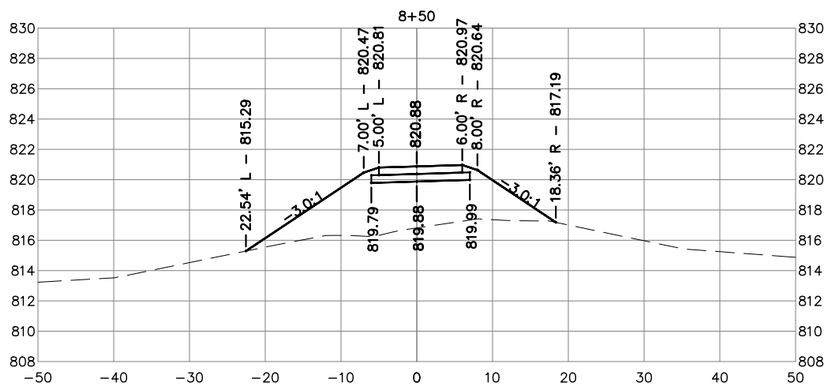

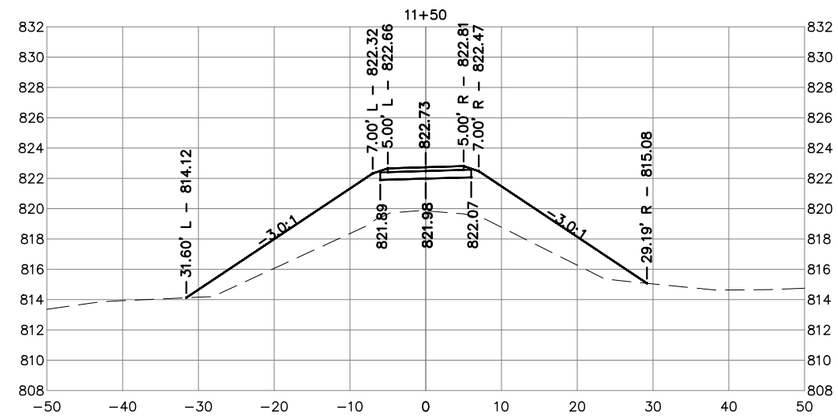

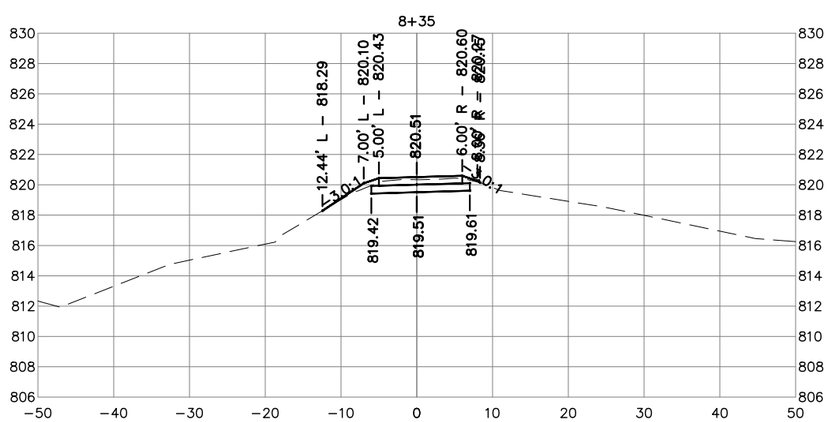

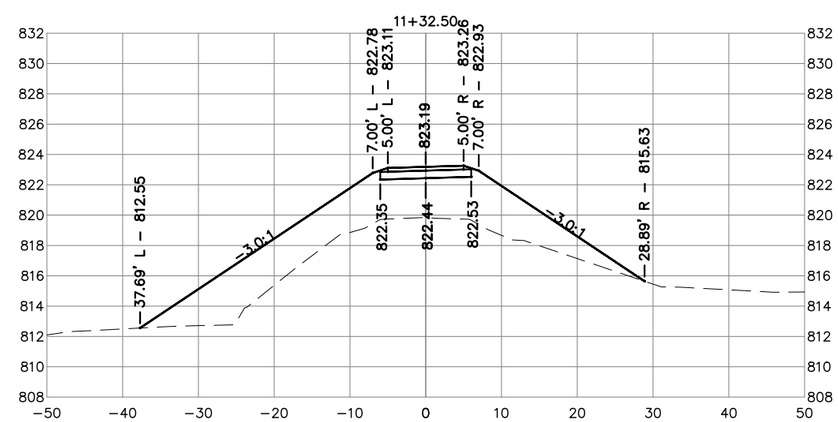

P:\17\160\DRAWINGS\CIVIL\17160 ZZ-W-1.DWG 8/20/2019 8:23:34 AM MARY ABBOTT

DESIGNED BY:	TRACED BY:	iiw	563.556.2464 ◆ 800.556.4491	BLACK HAWK COUNTY	PROJECT NUMBER	TAP-R-C007(154)--8T-07	STATE	FED. ROAD DIST. NO.	FISCAL YEAR	SHEET NO.	TOTAL SHEETS
DETAILED BY:	CHECKED BY:		IIW, P.C. ◆ www.iiwengr.com				IOWA	.	2019	W.1	23

TAP-R-C007(154)--8T-07

HORIZONTAL SCALE IN FEET
0 10 20
DRAWING MAY HAVE BEEN REDUCED

VERTICAL SCALE IN FEET
0 5 10
DRAWING MAY HAVE BEEN REDUCED

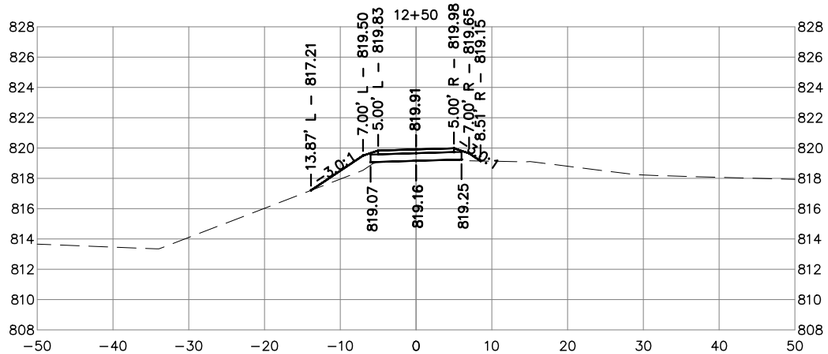

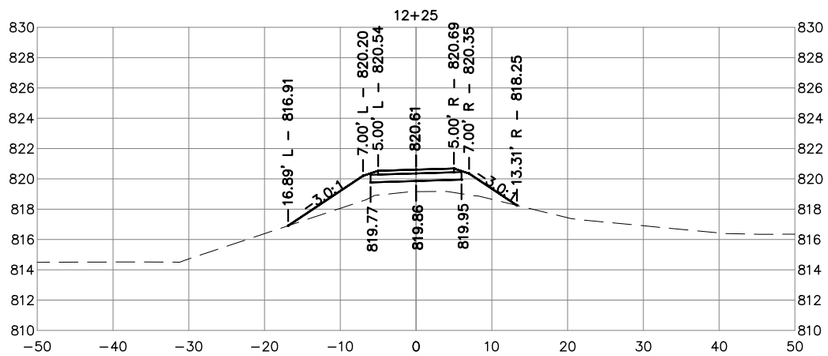

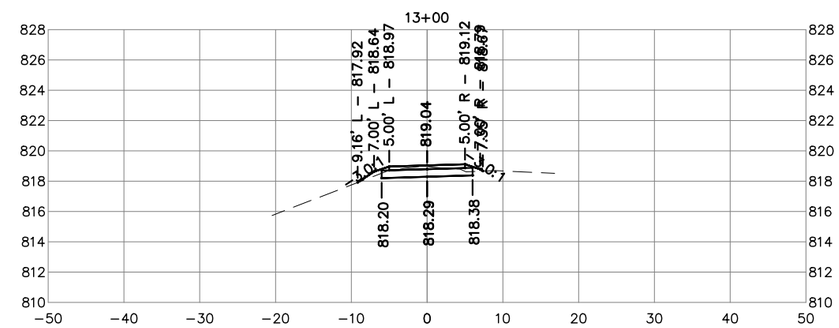

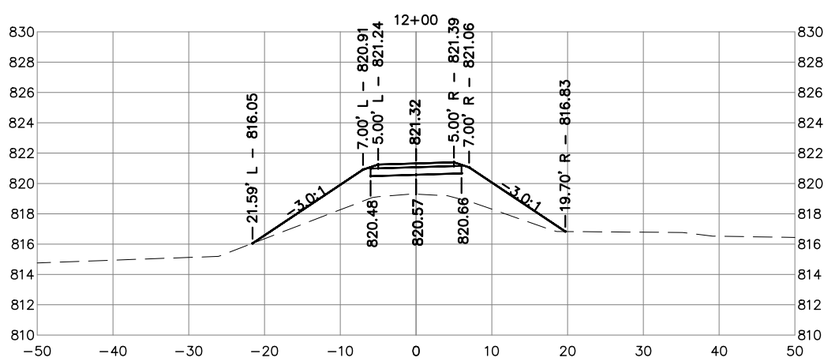

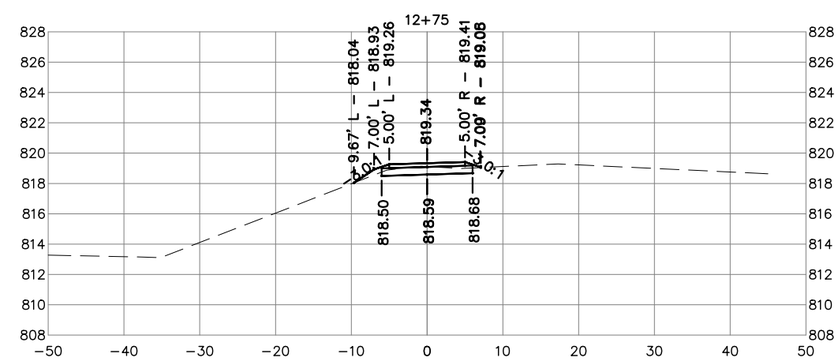

P:\17\160\DRAWINGS\CIVIL\17160 ZZ-W-1.DWG 8/20/2019 8:23:40 AM MARY ABBOTT

DESIGNED BY:	TRACED BY:	iiw 563.556.2464 ◆ 800.556.4491 IIW, P.C. ◆ www.iiwengr.com	BLACK HAWK COUNTY	PROJECT NUMBER	TAP-R-C007(154)--8T-07	STATE	FED. ROAD DIST. NO.	FISCAL YEAR	SHEET NO.	TOTAL SHEETS
DETAILED BY:	CHECKED BY:					IOWA	.	2019	W.2	23