BRIDGE DECK OVERLAY
BRFN-018-7(64)--39-19

LETTING DATE
11-19-2019

CHICKASAW COUNTY - DESIGN 120

CHICKASAW COUNTY

LEGEND

- INTERSTATE HIGHWAY
- PRIMARY HIGHWAY-DIVIDED
- PRIMARY HIGHWAY
- PORTLAND CEMENT CONCRETE ROAD
- ASPHALT ROAD
- BITUMINOUS ROAD
- GRAVEL ROAD
- EARTHEN ROAD
- INTERSTATE HIGHWAY (80)
- UNITED STATES HIGHWAY (65)
- STATE HIGHWAY (175)
- COUNTY HIGHWAY (S27)
- RAILROAD
- PIPELINE
- AIRPORT
- HYDROLOGY
- BRIDGE
- STATE BOUNDARY
- COUNTY BOUNDARY
- CORPORATE BOUNDARY
- TOWNSHIP LINE
- SECTION LINE
- ROAD NAMES — ABBEY ROAD
- UNINCORPORATED PLACE — ELWOOD

IOWA DOT
Highway Division

PLANS OF PROPOSED IMPROVEMENTS ON THE

PRIMARY ROAD SYSTEM

CHICKASAW COUNTY

BRIDGE DECK OVERLAY

US 18 OVER BRANCH
OF THE LITTLE WAPSIPINICON RIVER
1.9 MI. WEST OF US 63

THE IOWA DEPARTMENT OF TRANSPORTATION STANDARD SPECIFICATIONS FOR HIGHWAY AND BRIDGE CONSTRUCTION, SERIES 2015, PLUS APPLICABLE GENERAL SUPPLEMENTAL SPECIFICATIONS, DEVELOPMENTAL SPECIFICATIONS, SUPPLEMENTAL SPECIFICATIONS AND SPECIAL PROVISIONS SHALL APPLY TO CONSTRUCTION WORK ON THIS PROJECT.

DESIGN 120

R-13W

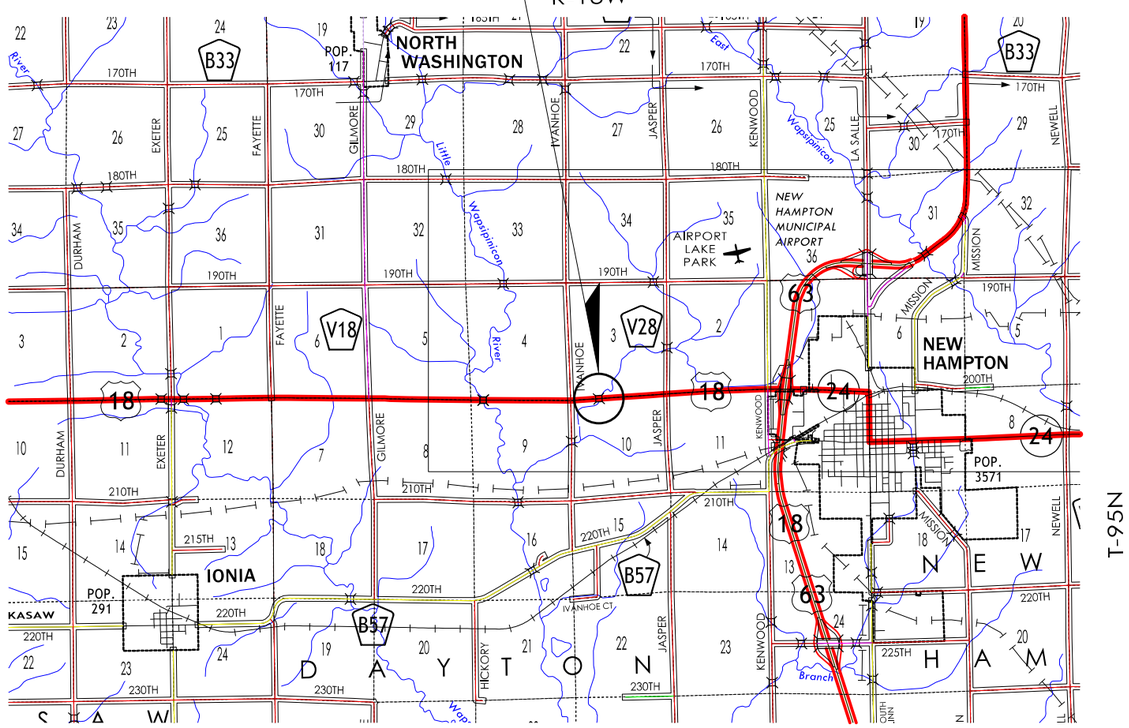

LOCATION MAP

PROJECT DIRECTORY NAME: 1901802015

ENGLISH STANDARD BRIDGE PLANS		
STANDARD	ISSUED	REVISED

	TOTAL SHEETS
	20
PROJECT NUMBER	
BRFN-018-7(64)--39-19	
R.O.W. PROJECT NUMBER	
PROJECT IDENTIFICATION NUMBER	
15-19-018-020	

INDEX OF SHEETS

NO.	DESCRIPTION
1	TITLE SHEET
2	ESTIMATE SHEET - DESIGN 120
2-7	DESIGN 120
C.1	ESTIMATE SHEET FOR ROADWAY
A.1-J.2	ROADWAY SHEETS

REVISIONS

IOWA ONE CALL
1-800-292-8989
www.iowaonecall.com
811 Know what's below. Call before you dig.

STANDARD ROAD PLANS

STANDARD ROAD PLANS ARE LISTED ON SHEET NUMBER C.2

DESIGN DATA RURAL

2018 AADT	3240	V.P.D.
TRUCKS	13	%
Total Design ESALs	1,200,000	

INDEX OF SEALS

SHEET NO.	NAME	TYPE
1	JAREMY D. KOTTA	STRUCTURAL DESIGN
A.1	BRANDYN G. CHEZICK	ROADWAY DESIGN

STRUCTURAL DESIGN

LICENSED PROFESSIONAL ENGINEER JAREMY D. KOTTA 18994 IOWA

I hereby certify that this engineering document was prepared by me or under my direct personal supervision and that I am a duly licensed Professional Engineer under the laws of the State of Iowa.

Signature 8/6/2019 Date

Jaremy D. Kotta
Printed or Typed Name

My license renewal date is December 31, 2019

Pages or sheets covered by this seal: 1 THRU 7

DESIGN TEAM	ENGLISH	IOWA DOT * OFFICE OF BRIDGES AND STRUCTURES	FILE NO. 31500	CHICKASAW COUNTY	PROJECT NUMBER BRFN-018-7(64)--39-19	SHEET NUMBER 1

8/6/2019 12:54:41 PM lu L:\Dept\6\8500.04 Bridge Overlays\Chickasaw 120\Drawings\BRG_19018064.dgn 190120S000 11x17_pdf.pltcfg

GENERAL NOTES:

THIS DESIGN IS FOR REPAIRS TO THE EXISTING 36'-0 x 43'-0 STEEL I-BEAM BRIDGE ON US 18 OVER THE BRANCH OF LITTLE WAPSIPINICON RIVER IN CHICKASAW COUNTY.

ELECTRONIC COPIES OF ORIGINAL DESIGN PLANS AND REPAIR PLANS WILL BE MADE AVAILABLE TO THE CONTRACTOR AS PART OF THE E-FILES SUPPLIED WITH THE CONTRACT DOCUMENTS.

SEE DESIGN SHEET 2 FOR LIST OF REPAIR ITEMS.

FAINT LINES ON PLANS INDICATE THE EXISTING STRUCTURE.

ALL DIMENSIONS AND DETAILS SHOWN ON THESE PLANS PERTINENT TO NEW CONSTRUCTION SHALL BE VERIFIED IN THE FIELD BY THE CONTRACTOR BEFORE STARTING CONSTRUCTION.

THESE BRIDGE PLANS LABEL ALL REINFORCING STEEL WITH ENGLISH NOTATION (5a1 is $\frac{5}{8}$ inch diameter bar). ENGLISH REINFORCING STEEL RECEIVED IN THE FIELD MAY DISPLAY THE FOLLOWING "BAR DESIGNATION". THE "BAR DESIGNATION" IS THE STAMPED IMPRESSION ON THE REINFORCING BARS, AND IS EQUIVALENT TO THE BAR DIAMETER IN MILLIMETERS.

ENGLISH SIZE	3	4	5	6	7	8	9	10	11
BAR DESIGNATION	10	13	16	19	22	25	29	32	36

MINIMUM CLEAR DISTANCE FROM FACE OF CONCRETE TO NEAR REINFORCING BAR IS TO BE 2" UNLESS OTHERWISE NOTED OR SHOWN.

ALL REINFORCING BARS AND BARS NOTED AS DOWELS SUPPLIED FOR THIS STRUCTURE SHALL BE DEFORMED REINFORCEMENT UNLESS OTHERWISE NOTED OR SHOWN.

THE INTERIOR FACES OF THE EXISTING CONCRETE CURBS ARE TO BE CLEANED AND SEALED IN ACCORDANCE WITH ARTICLE 2403.03, P, OF THE STANDARD SPECIFICATIONS. ALL COSTS ASSOCIATED WITH CLEANING AND SEALING OF THE CONCRETE CURBS SHALL BE INCLUDED IN THE UNIT PRICE BID ITEM "DECK OVERLAY".

UTILITY COMPANIES WHOSE FACILITIES ARE SHOWN ON THE PLANS OR KNOWN TO BE WITHIN THE CONSTRUCTION LIMITS SHALL BE NOTIFIED BY THE BRIDGE CONTRACTOR OF THE STARTING DATE.

PLAN QUANTITY OF DECK REPAIR IS BASED ON THE "SURVEY PLOT" AS SHOWN IN THESE PLANS. HATCHED PORTIONS REPRESENT CLASS A BRIDGE DECK REPAIR. CROSS HATCHED PORTIONS, IF SHOWN, REPRESENT CLASS B BRIDGE DECK REPAIR. THE PLAN QUANTITY FOR "CLASS A DECK REPAIR" IS ESTIMATED AS 120.7 SY BASED ON HAND SOUNDING OF THE DECK PLUS 25% INCREASE FOR ESTIMATING PURPOSES. ACTUAL SPALLED AND HOLLOW AREAS, AS DETERMINED BY THE ENGINEER AT THE TIME OF CONSTRUCTION SHALL BE REPAIRED.

PRESENT DECK THICKNESS VARIES FROM ABOUT $5\frac{1}{2}$ INCHES TO $7\frac{1}{2}$ INCHES. THE CONTRACTOR SHALL EXERCISE CARE IN REMOVING CONCRETE IN ORDER TO PREVENT UNNECESSARY UNBONDING OF REINFORCING STEEL.

SURFACE PREPARATION SHALL BE ACCORDING TO ARTICLE 2413.03, B AND C OF THE STANDARD SPECIFICATIONS. THE CONTRACTOR SHALL ENSURE THE VERTICAL EDGE OF THE STAGE 1 OVERLAY IS PREPARED FOR PLACEMENT OF THE NEW CONCRETE FOR STAGE 2 BY SANDBLASTING OR SHOT BLASTING, FOLLOWED BY AN AIR BLAST. ENSURE THIS CLEANING REMOVES ALL DIRT, OIL, AND OTHER FOREIGN MATERIAL. ENSURE IT REMOVES ALL UNSOUND CONCRETE, LAITANCE, OR LOOSE MATERIAL FROM THE SURFACE AND EDGES AGAINST WHICH THE SURFACE MIXTURE IS TO BE PLACED. THE CLEANING SHOULD ROUGHEN THE SURFACE IN ORDER TO PROVIDE SATISFACTORY BOND WITH THE SURFACING MIXTURE.

READY MIX TRUCKS ARE NOT ALLOWED ON THE PREPARED PORTION OF THE BRIDGE DECK.

THE LUMP SUM BID FOR "REMOVALS, AS PER PLAN" SHALL INCLUDE ALL COSTS ASSOCIATED WITH REMOVING THE EXISTING RAILING AND POSTS, PORTIONS OF THE WINGS, AND CUTTING OFF AND PAINTING OF THE EXISTING RAIL POST ANCHOR BOLTS IF REQUIRED. REMOVAL OF SCHEDULED ITEMS SHALL BE IN ACCORDANCE WITH SECTION 2401 OF THE SPECIFICATIONS. ANY DAMAGE TO ANY STEEL OR CONCRETE NOT TO BE REMOVED SHALL BE THE RESPONSIBILITY OF THE CONTRACTOR AND REPAIRED AT NO EXTRA COST TO THE STATE.

CONSTRUCTION SHALL BE DONE IN STAGES WITH AT LEAST ONE LANE TRAFFIC MAINTAINED AT ALL TIMES IN ACCORDANCE WITH "TRAFFIC CONTROL PLAN" NOTE.

SURFACE RAISE, AS SHOWN ON THE PLANS, SHALL BE CONSIDERED A MINIMUM. IN ORDER TO LIMIT THE ADDITIONAL DEAD LOAD SURFACE RAISE SHALL BE RESTRICTED TO A MAXIMUM OF $\frac{1}{2}$ INCHES MORE THAN SHOWN ON THE PLANS. PROFILE MAY BE ADJUSTED TO THE EXTENT POSSIBLE WITHIN THESE LIMITS.

THE PRICE BID FOR "RETROFIT CONCRETE BARRIER RAILING" SHALL INCLUDE THE COSTS OF SETTING BARS AS DOWELS IN THE BARRIER RAILING.

SPECIFICATIONS:

DESIGN: AASHTO SERIES 2002.

CONSTRUCTION: IOWA DEPARTMENT OF TRANSPORTATION STANDARD SPECIFICATIONS FOR HIGHWAY AND BRIDGE CONSTRUCTION, SERIES 2015, PLUS APPLICABLE GENERAL SUPPLEMENTAL SPECIFICATIONS, DEVELOPMENTAL SPECIFICATIONS, SUPPLEMENTAL SPECIFICATIONS AND SPECIAL PROVISIONS SHALL APPLY TO CONSTRUCTION WORK ON THIS PROJECT.

DESIGN STRESSES:

DESIGN STRESSES FOR THE FOLLOWING MATERIALS ARE IN ACCORDANCE WITH THE AASHTO STANDARD SPECIFICATIONS FOR HIGHWAY BRIDGES, SERIES 2002.

REINFORCING STEEL IN ACCORDANCE WITH SECTION 8, GRADE 60.

CONCRETE IN ACCORDANCE WITH SECTION 8, f'c = 4.0 KSI.

ESTIMATED BRIDGE QUANTITIES

ITEM NO.	ITEM CODE	ITEM	UNIT	TOTAL	AS BUILT QUANTITY
1	2401-6750001	REMOVALS, AS PER PLAN	LS	1.00	
2	2408-7800000	STRUCTURAL STEEL	LB	320	
3	2413-0698074	DECK REPAIR, CLASS A	SY	120.7	
4	2414-6431100	RETROFIT CONCRETE BARRIER RAILING	LF	136.0	
5	2533-4980005	MOBILIZATION	LS	1.00	
		ALTERNATE AA OPTION 1			
6	2413-0698066	DECK OVERLAY (CLASS O PCC)	SY	189.3	
		ALTERNATE AA OPTION 2			
7	2413-0698067	DECK OVERLAY (CLASS HPC-O PCC)	SY	189.3	

ESTIMATE REFERENCE INFORMATION:

ITEM NO.	DESCRIPTION
1	REMOVAL OF SCHEDULED ITEMS SHALL BE IN ACCORDANCE WITH SECTION 2401, OF THE STANDARD SPECIFICATIONS. ANY DAMAGE TO MATERIAL NOT TO BE REMOVED SHALL BE THE RESPONSIBILITY OF THE CONTRACTOR AND REPAIRED AT NO EXTRA COST TO THE STATE.
4	INCLUDES FURNISHING AND INSTALLING 1" DIAMETER PVC PIPE. INCLUDES 8.4 CY OF CLASS C OR CLASS BR STRUCTURAL CONCRETE AND 789 LBS OF GRADE 60 EPOXY COATED REINFORCING STEEL. IF PLACEMENT OF CONCRETE IS DONE BY THE SLIPFORMING METHOD, CLASS BR CONCRETE IS REQUIRED. CAST-IN-PLACE BARRIER RAILS SHALL USE CLASS C MIX. PRICE BID FOR THIS ITEM SHALL INCLUDE THE COST OF CAST-IN-PLACE FORMS IF REQUIRED FOR PLACEMENT OF THE CONCRETE.

SHOP DRAWING SUBMITTALS

SHOP DRAWINGS SHALL BE SUBMITTED FOR THE FOLLOWING ITEMS SHOWN IN THE TABLE BELOW. (NOTE ADDITIONAL SHOP DRAWINGS MAY BE REQUIRED IN ACCORDANCE WITH ARTICLE 1105.03 OF THE STANDARD SPECIFICATIONS.)

SUBMITTAL REQUIREMENTS FOR SHOP DRAWINGS SHOULD BE IN ACCORDANCE WITH ARTICLE 1105.03, OF THE STANDARD SPECIFICATIONS, FOR HIGHWAY AND BRIDGE CONSTRUCTION OF THE IOWA DEPARTMENT OF TRANSPORTATION.

SHOP DRAWINGS SHALL BE SUBMITTED WITH THE FOLLOWING NAMING CONVENTION:
(Paren)_County_DesignNumber_SubmittalDescription.pdf
Example: (090)_BlackHawk_Design915_DeckDrains.pdf

1	DRAIN EXTENSIONS

DESIGN HISTORY AT THIS SITE

DES. NO.	TYPE OF WORK
2134	ORIGINAL DESIGN
164	BRIDGE WIDENING
182	BRIDGE REPAIR
120	DECK OVERLAY

NOTE:
ROADWAY QUANTITIES SHOWN ELSEWHERE IN THESE PLANS.

TRAFFIC CONTROL PLAN
NOTE: THE ROADWAY WILL BE OPEN TO THRU TRAFFIC. REFER TO THE TRAFFIC CONTROL PLAN SHOWN ELSEWHERE IN THESE PLANS.

DESIGN FOR REPAIR TO 0° SKEW

36'-0 x 43'-0 STEEL I-BEAM BRIDGE

GENERAL NOTES AND QUANTITIES

STA. 491+31.50 (US 18) SEPTEMBER, 2019

CHICKASAW COUNTY

IOWA DEPARTMENT OF TRANSPORTATION - HIGHWAY DIVISION

DESIGN SHEET NO. 1 OF 6 FILE NO. 31500 DESIGN NO. 120

whks engineers + planners + land surveyors

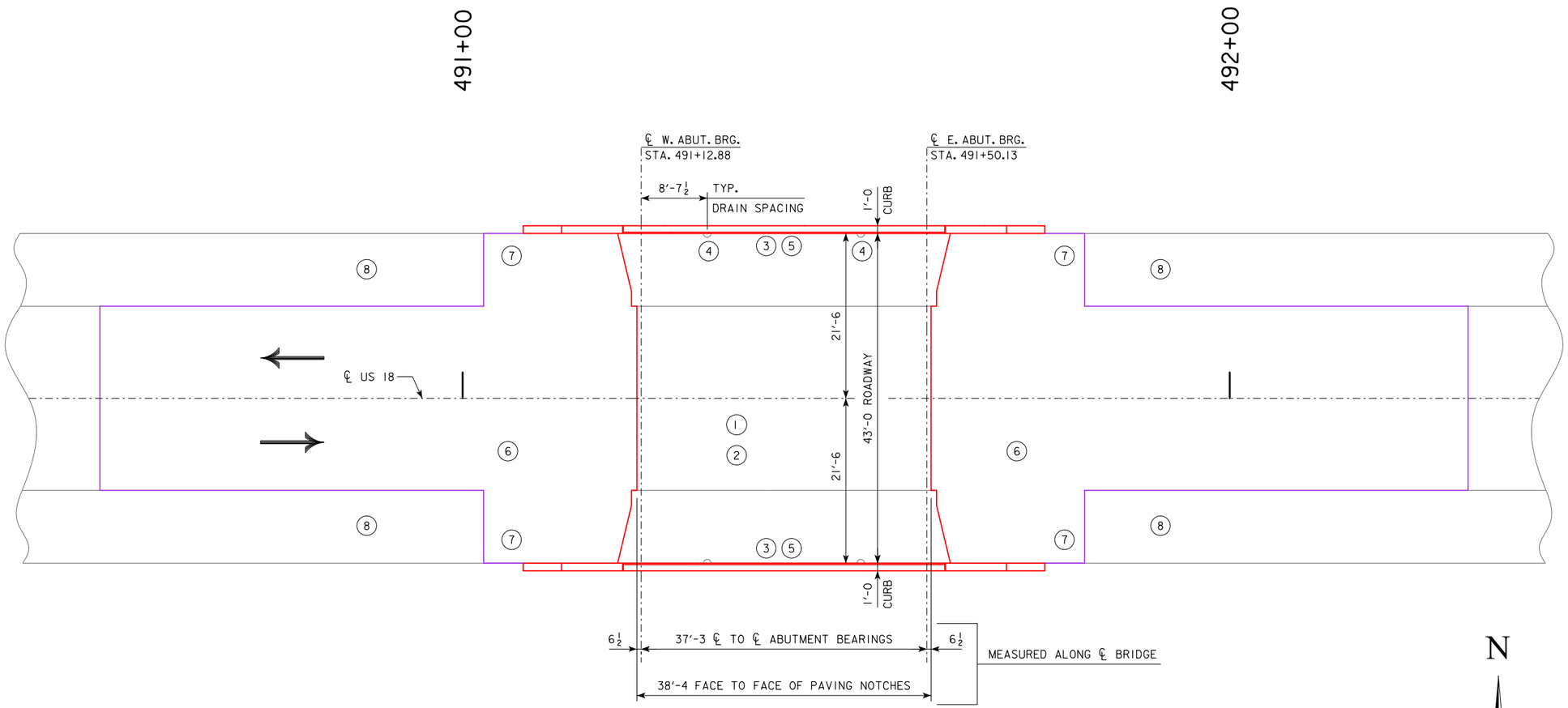

SITUATION PLAN

REPAIRS SHALL CONSIST OF:

1. DECK REPAIR, CLASS A.
2. BRIDGE DECK OVERLAY.
3. REMOVE EXISTING BRIDGE RAIL AND POSTS AND INSTALL RETROFIT BARRIER RAIL ON CURBS AND END SECTIONS ON WINGS.
4. REATTACH DECK DRAIN EXTENSIONS.
5. CLEAN AND SEAL INSIDE FACE OF CONCRETE CURBS.
6. REMOVE AND REPLACE APPROACH.
7. REMOVE AND REPLACE GUARDRAIL.
8. CONSTRUCT PAVED SHOULDERS IN FRONT OF GUARDRAIL.

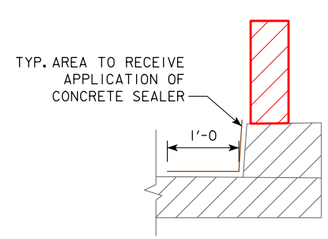

DETAIL OF CONCRETE SEALER AREA

LOCATION:

US 18 OVER BRANCH
LITTLE WAPSIPINICON RIVER
T-95N, R-13W
SECTIONS 3 & 10
DAYTON TOWNSHIP
CHICKASAW COUNTY
MAINT. NO. 1928.4S018
FHWA NO. 19640
LATITUDE 43.066086
LONGITUDE -92.371294

TRAFFIC ESTIMATE

2018 AADT	3240	V.P.D.
TRUCKS	13	%
TOTAL 20 YEAR ESAL's	1,200,000	

DESIGN FOR REPAIR TO 0° SKEW

36'-0 x 43'-0 STEEL I-BEAM BRIDGE

SITUATION PLAN

STA. 491+31.50 (US 18) SEPTEMBER, 2019

CHICKASAW COUNTY

IOWA DEPARTMENT OF TRANSPORTATION - HIGHWAY DIVISION

DESIGN SHEET NO. 2 OF 6 FILE NO. 31500 DESIGN NO. 120

whks engineers + planners + land surveyors

DESIGN TEAM JDK/RCM/LMG	CHICKASAW COUNTY	PROJECT NUMBER BRFN-018-7(64)--39-19	SHEET NUMBER 3

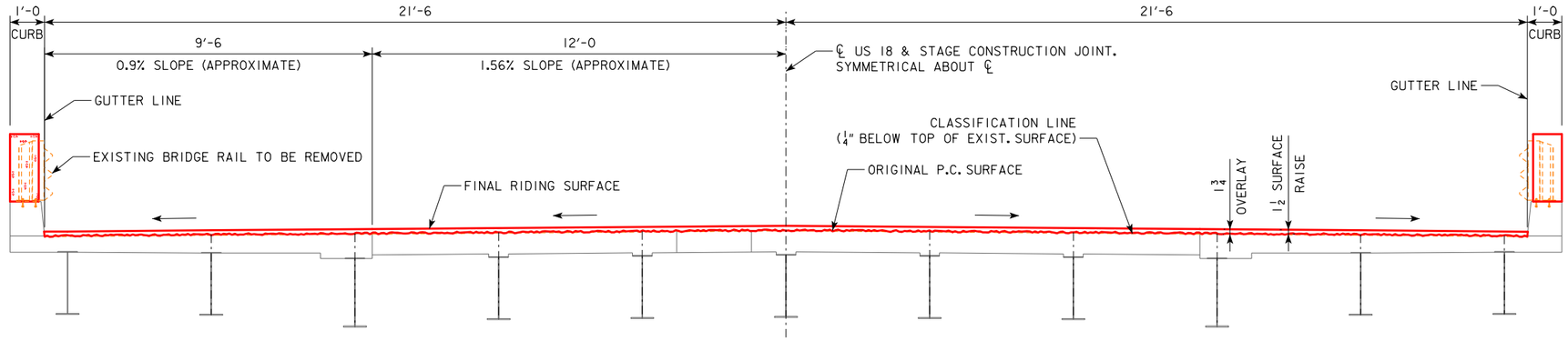

TYPICAL SECTION

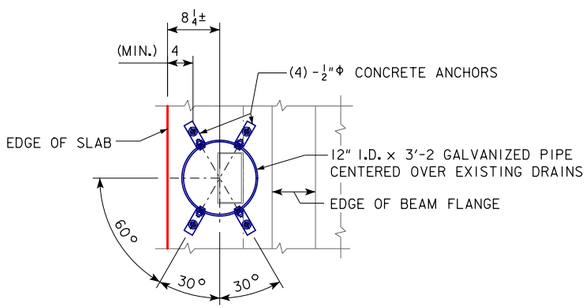

VIEW B-B

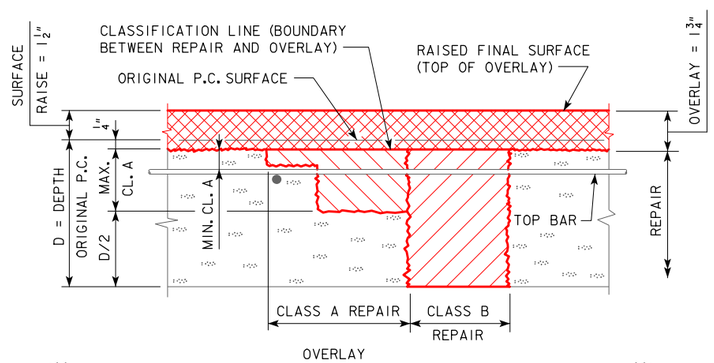

REPAIR AND OVERLAY DEFINITION

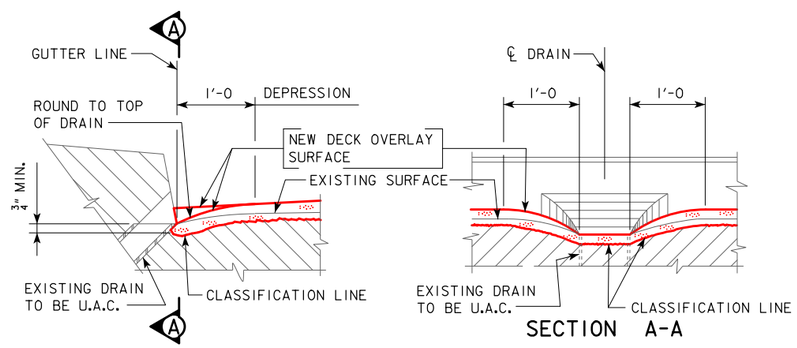

DECK REPAIR DETAIL AT DRAIN

(REQUIRED AT 4 LOCATIONS)

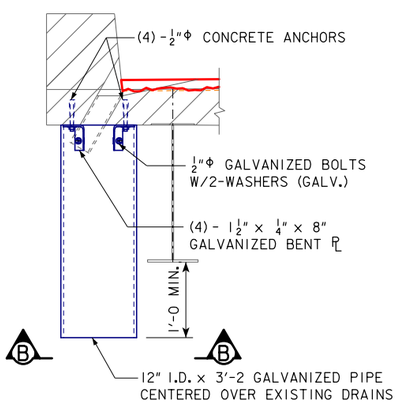

DRAIN EXTENSION REPLACEMENT DETAILS

(2 - REQUIRED AT NORTH DRAINS)

DRAIN EXTENSION NOTES:

DRAIN EXTENSIONS AND BENT PLATES ARE TO BE GALVANIZED AFTER FABRICATION ACCORDING TO SECTION 4100.07 OF THE STANDARD SPECIFICATIONS. 2 DRAIN EXTENSIONS ARE REQUIRED. WEIGHT OF ONE DRAIN EXTENSION = 160 LBS. WEIGHT OF DRAINS IS BASED ON STANDARD PIPE AND INCLUDES BENT PLATES.

THE CONTRACTOR SHALL PATCH SPALLED CONCRETE OUTSIDE OF THE AREA OF THE DRAIN EXTENSION PIPE TO FACILITATE DRAIN EXTENSION INSTALLATION.

THE STUD CONCRETE ANCHORS SHALL BE GALVANIZED AND HAVE A MINIMUM PULL OUT STRENGTH OF 8,000 POUNDS BASED ON 4,000 PSI CONCRETE.

ALL COSTS FOR FABRICATING AND INSTALLING DRAINS AS SHOWN, INCLUDING REMOVING EXISTING AND ALL MATERIAL, EQUIPMENT, AND LABOR, INCLUDING NECESSARY PATCHING, SHALL BE INCLUDED IN THE PRICE BID FOR "STRUCTURAL STEEL".

STRUCTURAL STEEL
2 DRAIN EXTENSIONS AT 160 LBS. EA. = 320 LBS.

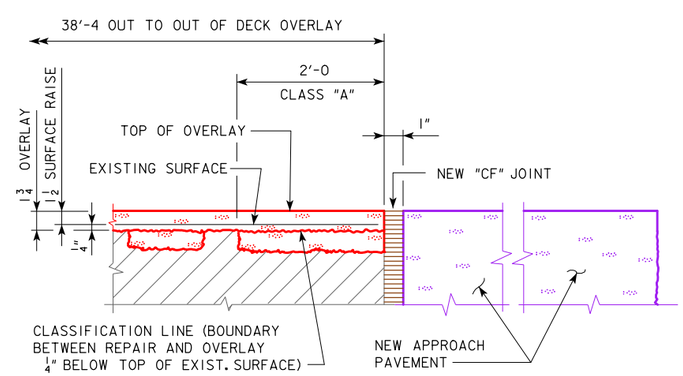

PART LONGITUDINAL SECTION ALONG ROADWAY

BOTH ABUTMENTS

NOTE:
THE 2'-0 CLASS "A" REPAIR AREA SHOWN AT THE JOINT SHALL BE REMOVED TO A MINIMUM DEPTH 1 INCH BELOW THE EXISTING TOP MAT OF REINFORCING. THE EXISTING BRIDGE DECK REINFORCING BARS SHALL BE CAREFULLY EXPOSED AND INCORPORATED INTO THE NEW CONSTRUCTION WORK.

whks
engineers + planners + land surveyors

DESIGN FOR REPAIR TO 0° SKEW

36'-0 x 43'-0 STEEL
I-BEAM BRIDGE

DECK REPAIR DETAILS

STA. 491+31.50 (US 18) SEPTEMBER, 2019

CHICKASAW COUNTY

IOWA DEPARTMENT OF TRANSPORTATION - HIGHWAY DIVISION

DESIGN SHEET NO. 3 OF 6 FILE NO. 31500 DESIGN NO. 120

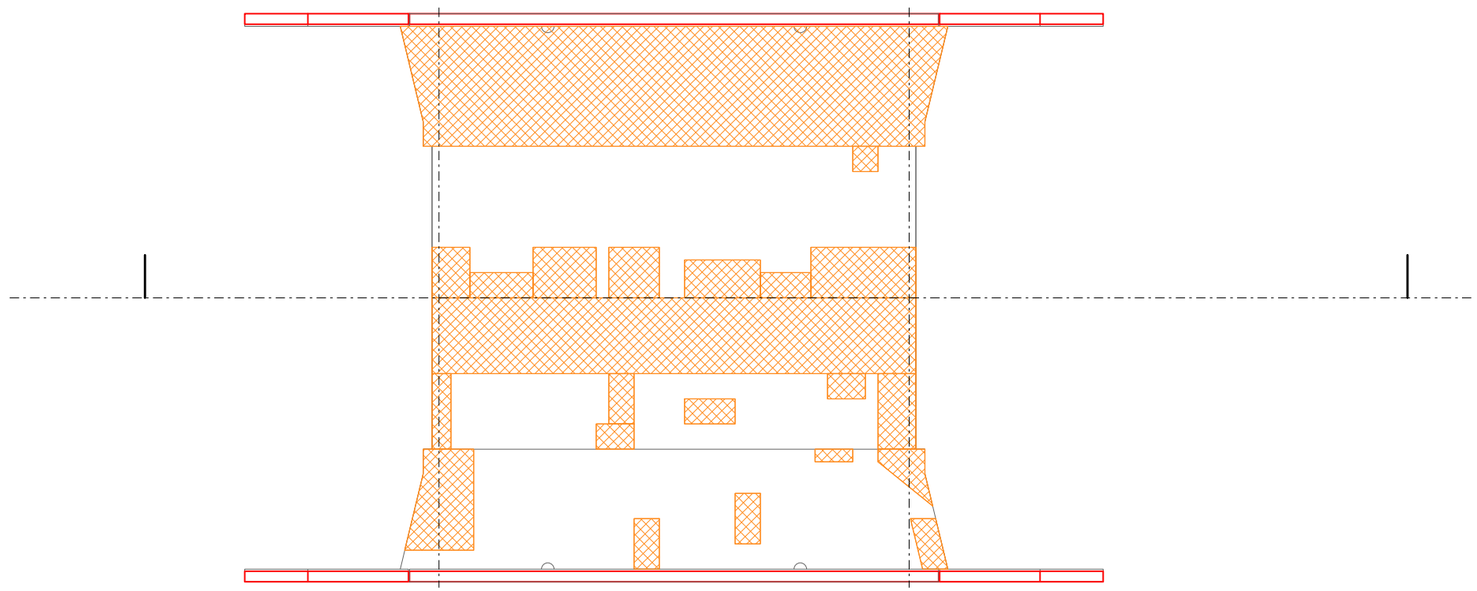

SURVEY PLOT
(APPROXIMATELY 870 SQ. FT.)

whks
engineers + planners + land surveyors

DESIGN FOR REPAIR TO 0° SKEW
36'-0 x 43'-0 STEEL
I-BEAM BRIDGE

SURVEY PLOT
STA. 491+31.50 (US 18) SEPTEMBER, 2019
CHICKASAW COUNTY
IOWA DEPARTMENT OF TRANSPORTATION - HIGHWAY DIVISION
DESIGN SHEET NO. 4 OF 6 FILE NO. 31500 DESIGN NO. 120

DESIGN TEAM JDK/RCM/LMG	CHICKASAW COUNTY	PROJECT NUMBER BRFN-018-7(64)--39-19	SHEET NUMBER 5

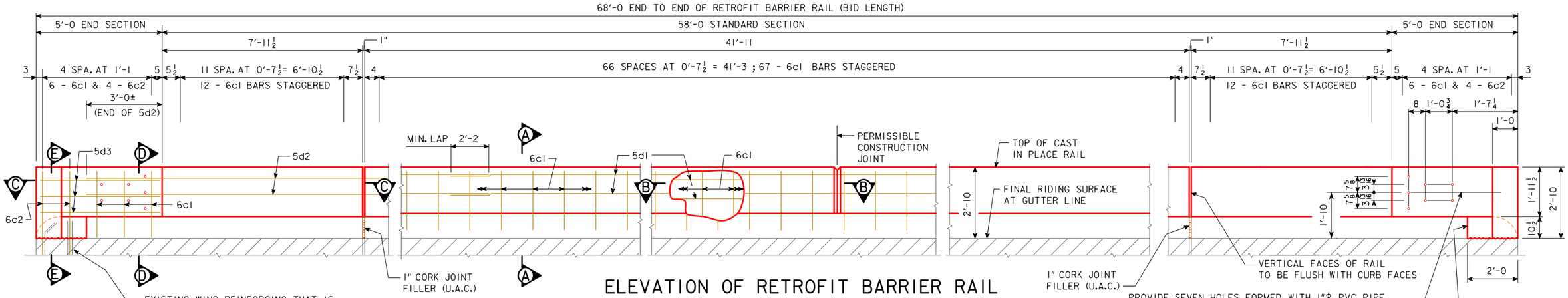

ELEVATION OF RETROFIT BARRIER RAIL

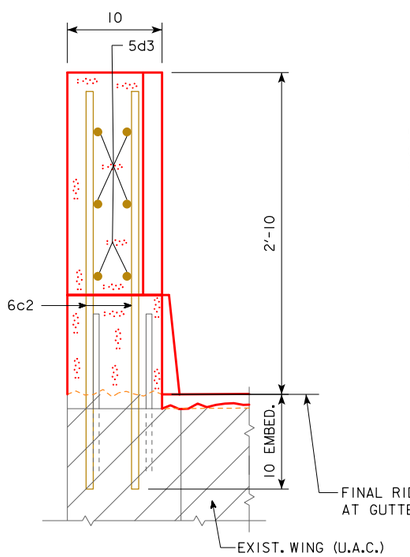

SECTION E-E

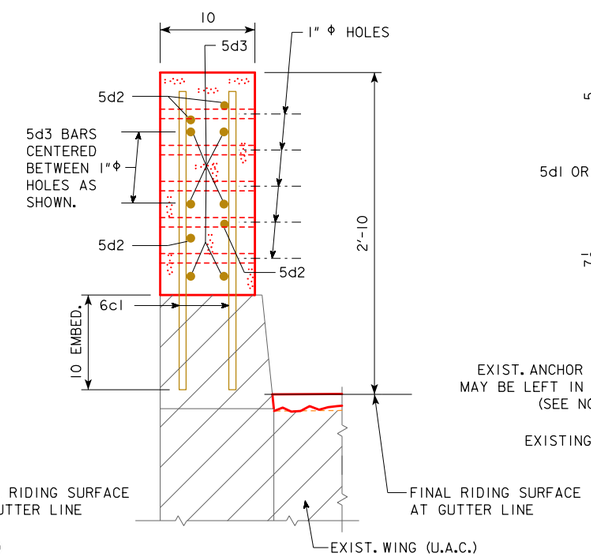

SECTION D-D

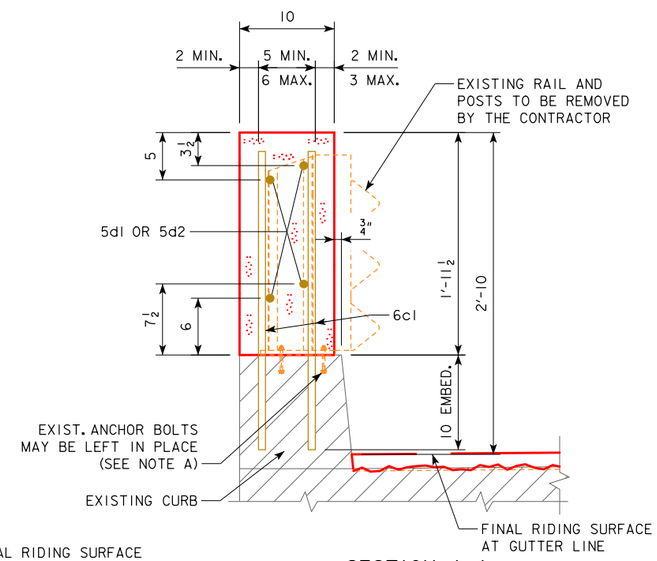

SECTION A-A

EPOXY REINFORCING STEEL- ONE RAIL

BAR	LOCATION	SHAPE	NO.	LENGTH	WEIGHT
6c1	STANDARD RAIL AND END SECTION, VERT.		105	2'-8	421
6c2	END SECTION, VERTICAL		8	3'-6	42
5d1	STANDARD RAIL, LONGIT.		4	41'-9	174
5d2	STANDARD RAIL, LONGIT.		8	11'-3	94
5d3	END SECTION, LONGIT.		12	4'-8	58
				TOTAL (LBS.)	789

NOTE A:
EXISTING RAIL IS TO BE REMOVED. ANY ANCHOR BOLTS THAT WILL HAVE AT LEAST 2" OF CONCRETE COVER WHEN ENCOMPASSED BY THE NEW BARRIER RAIL MAY BE LEFT IN PLACE AT THE CONTRACTORS OPTION SUBJECT TO THE APPROVAL OF THE ENGINEER. ANY ANCHOR BOLTS NOT HAVING THE 2" MIN. COVER SHALL BE CUT OFF FLUSH WITH OR SLIGHTLY BELOW THE TOP OF CURB AND ENDS OF NON STAINLESS STEEL BOLTS PAINTED WITH TWO COATS OF ZINC RICH PAINT.
STAINLESS STEEL ANCHOR BOLTS OUTSIDE THE AREA OF NEW BARRIER RAIL MAY BE LEFT IN PLACE AT CONTRACTORS OPTION SUBJECT TO APPROVAL OF THE ENGINEER. STAINLESS STEEL BOLTS NEED NOT BE PAINTED.
NON STAINLESS STEEL ANCHOR BOLTS OUTSIDE THE AREA OF NEW BARRIER RAIL SHALL BE CUT OFF FLUSH WITH OR SLIGHTLY BELOW TOP OF CURB SURFACE AND THE REMAINING EXPOSED ENDS PAINTED WITH TWO COATS OF ZINC RICH PAINT.

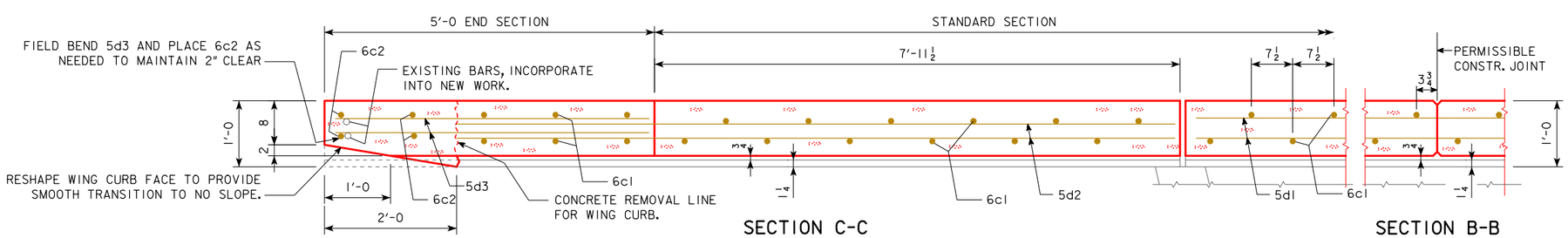

SECTION C-C
(SHOWING 6c1 PLACEMENT)

SECTION B-B
(SHOWING 6c1 PLACEMENT)

SEE DESIGN SHEET 6 FOR:
- RAIL JOINT DETAILS
- DOWEL SETTING NOTE
- RETROFIT BARRIER RAIL NOTES
- CONCRETE PLACEMENT SUMMARY

DESIGN FOR REPAIR TO 0° SKEW

36'-0 x 43'-0 STEEL I-BEAM BRIDGE

RETROFIT BARRIER RAIL DETAILS

STA. 491+31.50 (US 18) SEPTEMBER, 2019

CHICKASAW COUNTY

IOWA DEPARTMENT OF TRANSPORTATION - HIGHWAY DIVISION

DESIGN SHEET NO. 5 OF 6 FILE NO. 31500 DESIGN NO. 120

REVISED: 05-15 - REFERENCE TO "1"Φ PVC PIPE" WAS CHANGED FROM "1"Φ PLASTIC CONDUIT".
ENGLISHREPAIRRETROFITBRIDGES.DGN 1031E - THIS SHEET ISSUED 5-25-99.

DESIGN TEAM JDK/RCM/LMG	STANDARD SHEET 1031E (MODIFIED)	CHICKASAW COUNTY	PROJECT NUMBER BRFN-018-7(64)--39-19	SHEET NUMBER 6

RETROFIT BARRIER RAILING NOTES:

THE PERMISSIBLE CONSTRUCTION JOINTS ARE TO BE PLACED BETWEEN VERTICAL BARS AT A MINIMUM SPACING OF 20 FEET. CONSTRUCTION JOINT CONTACT SURFACES ARE TO BE COATED WITH AN APPROVED BOND BREAKER.

COST OF JOINT SEALER AND BOND BREAKER SHALL BE CONSIDERED INCIDENTAL TO OTHER CONSTRUCTION.

THE RETROFIT BARRIER RAIL IS TO BE BID ON A LINEAL FOOT BASIS MEASURED FROM END TO END OF RAIL. THE NUMBER OF LINEAL FEET OF RETROFIT BARRIER RAIL INSTALLED WILL BE PAID FOR AT THE CONTRACT PRICE PER LINEAL FOOT BASED ON PLAN QUANTITIES. PRICE BID FOR RETROFIT CONCRETE BARRIER RAILING SHALL BE FULL COMPENSATION FOR FURNISHING ALL MATERIAL (INCLUDING REINF. STEEL AND 1"Φ PVC PIPE) PLUS ALL OF THE EQUIPMENT AND LABOR REQUIRED TO ERECT THE RAIL IN ACCORDANCE WITH THESE PLANS AND CURRENT SPECIFICATIONS.

ALL RETROFIT BARRIER RAIL CONCRETE IS TO BE EITHER CLASS BR MIX OR CLASS C MIX.

CLASS BR CONCRETE SHALL BE USED FOR THE SLIP FORMING METHOD.

CLASS C CONCRETE SHALL BE USED FOR THE CAST-IN-PLACE METHOD. THE PRICE BID FOR THE CAST-IN-PLACE METHOD SHALL INCLUDE THE FORMWORK.

ALL REINFORCING STEEL IS TO BE GRADE 60 AND EPOXY COATED.

THE JOINT SEALER SHALL BE LIGHT GRAY NONSAG LATEX CAULKING SEALER MARKETED FOR OUTDOOR USE. NO TESTING OR CERTIFICATION IS REQUIRED.

THE PRICE BID FOR "REMOVALS AS PER PLAN" SHALL ALSO INCLUDE THE CUTTING OFF AND PAINTING OF THE EXISTING RAIL POST ANCHOR BOLTS IF REQUIRED.

EXISTING BRIDGE RAIL IS NOT TO BE REMOVED UNTIL AUTHORIZED BY THE ENGINEER.

DOWEL SETTING NOTE :

THE 6c1 & 6c2 BARS SHALL BE SET AS DOWELS IN DRILLED HOLES. HOLES ARE TO BE 10" DEEP. THE DOWELS SHALL BE INSTALLED IN ACCORDANCE WITH THE MANUFACTURER'S RECOMMENDATIONS. EITHER OF THE FOLLOWING SYSTEMS MAY BE USED AS A BONDING AGENT FOR VERTICAL DOWELS, BUT ONLY SYSTEM "A" MAY BE USED FOR HORIZONTAL DOWELS:

A. POLYMER GROUT SYSTEM SHALL BE IN ACCORDANCE WITH ARTICLE 2301.03, E, OF THE STANDARD SPECIFICATIONS.
B. HYDRAULIC CEMENT GROUT SYSTEMS. DRILLED HOLES ARE TO BE $2\frac{1}{2}$ TIMES THE DOWEL DIAMETER AND ARE TO BE BLOWN CLEAN WITH COMPRESSED AIR IMMEDIATELY PRIOR TO PLACING GROUT. THE HYDRAULIC CEMENT GROUT SHALL BE ONE OF THOSE APPROVED IN MATERIALS I.M. 491.13 AND SHALL BE USED IN ACCORDANCE WITH THE MANUFACTURER'S RECOMMENDATIONS.

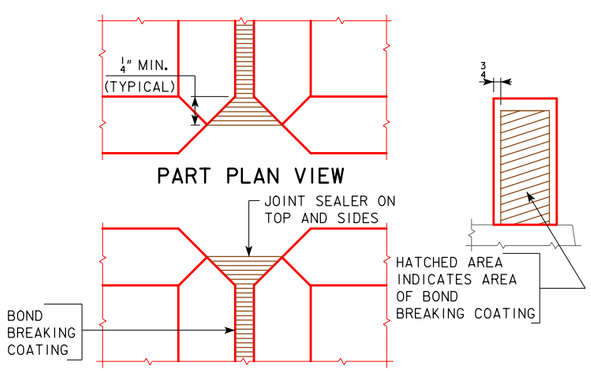

RETROFIT BARRIER RAIL JOINT DETAILS

CONCRETE PLACEMENT SUMMARY	
SECTION	TOTAL
STANDARD SECTION 116'-0 AT 0.06 CU. YDS. PER LIN. FT	7.0
END SECTIONS 4 AT 0.35 CU. YDS. PER SECTION	1.4
TOTAL (CU. YDS.)	8.4

DESIGN FOR REPAIR TO 0° SKEW

36'-0 x 43'-0 STEEL I-BEAM BRIDGE

RETROFIT BARRIER RAIL DETAILS

STA. 491+31.50 (US 18) SEPTEMBER, 2019

CHICKASAW COUNTY

IOWA DEPARTMENT OF TRANSPORTATION - HIGHWAY DIVISION

DESIGN SHEET NO. 6 OF 6 FILE NO. 31500 DESIGN NO. 120

REVISED 11-15 - MODIFIED "DESIGN HISTORY" TABLE TO STATE "(INCLUDES THIS DESIGN)".
REVISED 03-2017 - MODIFIED CONSTRUCTION: STANDARD SPECIFICATIONS BRIDGE CONSTRUCTION, SERIES TO 2015, (WAS 2012).
ENGLISHREPAIRRETROFITBRIDGES.DGN 1031T - THIS SHEET ISSUED 01-01.

INDEX OF SHEETS

No.	DESCRIPTION
A Sheets	**Title Sheets**
A.1	Title Sheet
B Sheets	**Typical Cross Sections and Details**
B.1 - 2	Typical Cross Sections and Details
C Sheets	**Quantities and General Information**
C.1	Project Description
C.1	Estimated Project Quantities
C.1	Estimate Reference Information
C.2	Standard Road Plans
C.2	Index of Tabulations
C.2	General Notes
C.3 - 6	Tabulations (beg. with tab. of incidentals if needed)
D Sheets	**Mainline Plan and Profile Sheets**
* D.1 - 2	US 18
J Sheets	**Traffic Control and Staging Sheets**
* J.1	Traffic Control Plan
* J.1	Staging Notes Stage
* J.1	511 Travel Restrictions
* J.2	Staging Typical Sheet
	* Color Plan Sheets

LICENSED PROFESSIONAL ENGINEER
BRANDYN G. CHEZICK
24712
IOWA

I hereby certify that this engineering document was prepared by me or under my direct personal supervision and that I am a duly licensed Professional Engineer under the laws of the State of Iowa.

Signature: 8/6/19 Date

Brandyn Geoffrey Chezick
Printed or Typed Name

My license renewal date is December 31, 2019

Pages or sheets covered by this seal: A.1, B.1-B.2, C.1-C.6, D.1-D.2, J.1-J.2

Design No. 120
File No. 31500

FILE NO.	ENGLISH	DESIGN TEAM **WHKS & CO.**	**CHICKASAW** COUNTY	PROJECT NUMBER **BRFN-018-7(64)--39-19**	SHEET NUMBER **A.1**

7156
Modified

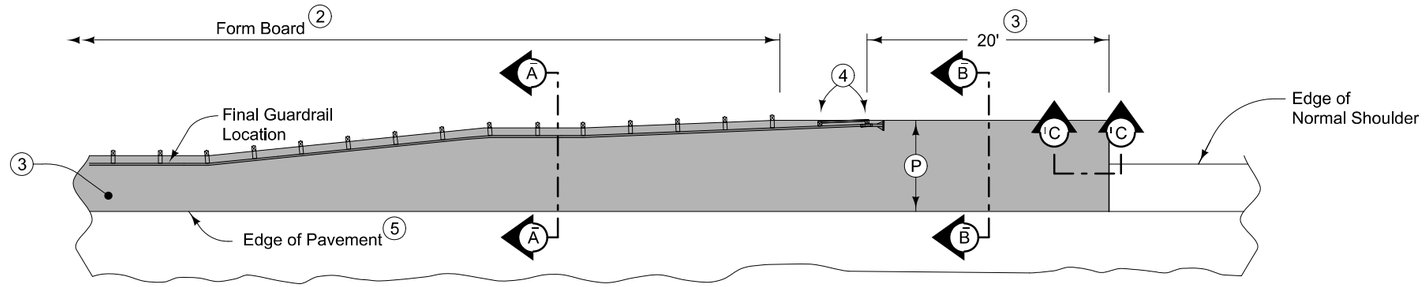

PLAN VIEW

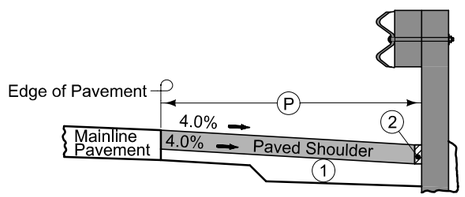

Section A-A

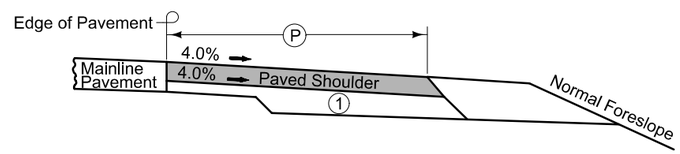

Section B-B

NEW CONSTRUCTION

9" HMA Paved Shoulder at guardrail. 8" PCC may be substituted with the following jointing layout:

Match mainline pavement joint spacing. When mainline pavement is 8" or greater in thickness, place additional transverse 'C' joints in shoulder at mid-panel of the mainline pavement. Place longitudinal 'C' joint at P/2 from edge of mainline pavement when P is greater than 10' wide. Terminate longitudinal joint at transverse joint less than 10' in length.

Compaction of HMA is required to face of guardrail post. Hand compaction will be allowed under guardrail. Removal and reinstallation of guardrail will be allowed with no additional payment.

Refer to Tabulation 112-9 for shoulder quantities.

1. For subgrade treatment, refer to other details in the plan.
2. PCC option only: When guardrail posts are installed prior to construction of PCC paved shoulder, fasten form board to the face of guardrail posts for the length shown. Refer to note 4 for final 2 posts.
3. Continue paved shoulder to existing paved shoulder or 20 feet beyond the center of the first post.
4. Shoulder may be notched for final 2 posts or post sleeves may be installed through pavement. Do not drive posts through pavement.
5. 'KT-1 joint for PCC shoulder.
   'B' joint for HMA shoulder.

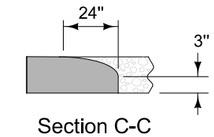

Section C-C
Roll down at granular shoulder or earth.

PAVED SHOULDER AT GUARDRAIL

Design No. 120
File No. 31500

FILE NO.	ENGLISH	DESIGN TEAM WHKS & CO.	CHICKASAW COUNTY	PROJECT NUMBER BRFN-018-7(64)--39-19	SHEET NUMBER B.1

4:45:20 PM 8/5/2019 bchezick L:\Dept\6\8500.04 Bridge Overlays\Chickasaw 120\Roadway\CADD Files\Sheet Files\SHT_19018064B01.dgn

8212
10-16-12

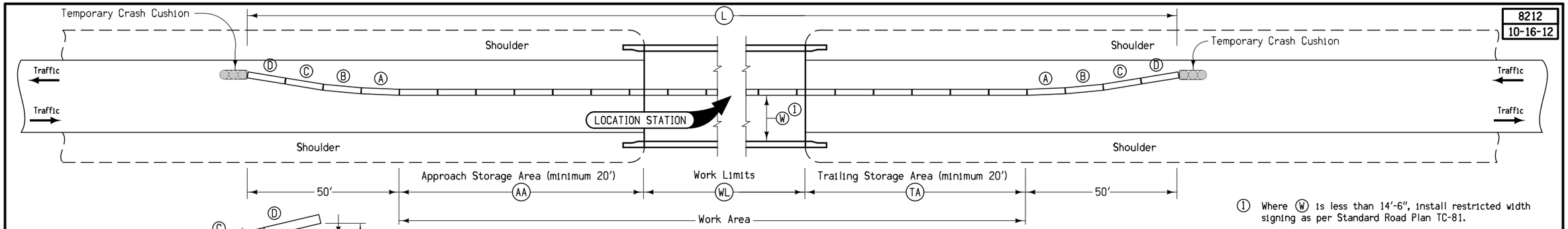

1 Where W is less than 14'-6", install restricted width signing as per Standard Road Plan TC-81.

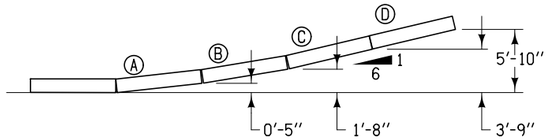

BARRIER OFFSETS FOR FLARE SECTIONS

Station	Side	AA	WL	TA	L	Anchored	W (1)	Remarks
		Feet	Feet	Feet	Feet	X	Ft-Inches	
491+31.50	EB Rt	26.05	178.33	26.05	330.43		17-7½"	Stage 2 26 Sections
491+31.50	WB Lt	26.05	178.33	26.05	330.43		17-7½"	Stage 3 26 Sections

TEMPORARY CONCRETE BARRIER LAYOUT for Two-Way Traffic

WHKS-1

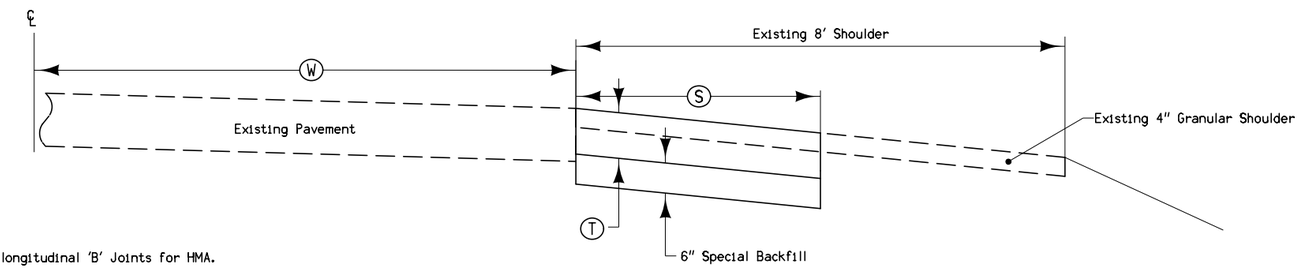

Outside Shoulders

Note:

1). Use longitudinal 'B' Joints for HMA.

2). Use longitudinal 'BT-1' or 'BT-5' Joints for PCC.
Use transverse 'C' Joints for PCC.

SHOULDER STRENGTHENING ALTERNATIVES

Location		Pavement Alternates		Existing Pavement	Width of Strengthening	6" Special Backfill	Shoulder Strengthening	Removal of Pavement	Class 13 Excavation	Remarks
		HMA	PCC							
Station To Station		T	T	W	S					
		Inches	Inches	Feet	Feet	Tons	SY	SY	CY	
487+66.43	489+12.33	8	8	12	4	20.4	64.8		21.6	Stage 1 WB
487+66.43	489+12.33	8	8	12	4	20.4	64.8		21.6	Stage 1 EB
491+50.67	495+96.57	8	8	12	4	48.4	153.7		51.2	Stage 1 EB
493+24.45	495+96.57	8	8	12	4	24.2	76.7		25.6	Stage 1 WB
						113.4	360.0		120.0	Total

Design No. 120
File No. 31500

FILE NO.	ENGLISH	DESIGN TEAM WHKS & CO.	CHICKASAW COUNTY	PROJECT NUMBER BRFN-018-7(64)--39-19	SHEET NUMBER B.2

100-1D
10-18-05

PROJECT DESCRIPTION

This project is for a bridge deck overlay along US 18 over the East Branch of the Little Wapsipinicon River. The project will involve bridge approach reconstruction, paved shoulder construction, shoulder strengthening, guardrail installation, and grading.

100-0A
10-28-97

ESTIMATED ROADWAY QUANTITIES
(1 DIVISION PROJECT)

Item No.	Item Code	Item	Unit	Total	As Built Qty.
1	2102-0425070	SPECIAL BACKFILL	TON	297.5	
2	2102-2625000	EMBANKMENT-IN-PLACE	CY	140	
3	2122-5500090	PAVED SHOULDER, HOT MIX ASPHALT MIXTURE, 9 IN.	SY	526.4	
4	2122-7450080	SHOULDER STRENGTHENING, OPTIONAL HOT MIX ASPHALT MIXTURE OR PORTLAND	SY	360	
		CEMENT CONCRETE, 8 IN.			
5	2123-7450020	SHOULDER FINISHING, EARTH	STA	5.2	
6	2213-2713300	EXCAVATION, CLASS 13, FOR WIDENING	CY	284.4	
7	2301-0690202	BRIDGE APPROACH, BR-202	SY	456.4	
8	2412-0000100	LONGITUDINAL GROOVING IN CONCRETE	SY	575.9	
9	2505-4008120	REMOVAL OF STEEL BEAM GUARDRAIL	LF	350	
10	2505-4008300	STEEL BEAM GUARDRAIL	LF	100	
11	2505-4008410	STEEL BEAM GUARDRAIL BARRIER TRANSITION SECTION, BA-201	EACH	4	
12	2505-4021010	STEEL BEAM GUARDRAIL END ANCHOR, BOLTED	EACH	4	
13	2505-4021720	STEEL BEAM GUARDRAIL TANGENT END TERMINAL, BA-205	EACH	4	
14	2510-6745850	REMOVAL OF PAVEMENT	SY	446.7	
15	2526-8285000	CONSTRUCTION SURVEY	LS	1	
16	2527-9263109	PAINTED PAVEMENT MARKINGS, WATERBORNE OR SOLVENT-BASED	STA	19.57	
17	2527-9263131	WET, RETROREFLECTIVE REMOVABLE TAPE MARKINGS	STA	3.3	
18	2527-9263180	PAVEMENT MARKINGS REMOVED	STA	19.57	
19	2528-8400048	TEMPORARY BARRIER RAIL, CONCRETE	LF	650	
20	2528-8400256	TEMPORARY TRAFFIC SIGNALS	EACH	1	
21	2528-8445110	TRAFFIC CONTROL	LS	1	
22	2528-8445113	FLAGGERS	EACH	SEE PROPOSAL	
23	2551-0000110	TEMP CRASH CUSHION	EACH	4	
24	2602-0000320	PERIMETER AND SLOPE SEDIMENT CONTROL DEVICE, 20 IN. DIA.	LF	1000	
25	2602-0000071	REMOVAL OF PERIMETER AND SLOPE SEDIMENT DEVICE	LF	1000	

100-4A
10-29-02

ESTIMATE REFERENCE INFORMATION

Item No.	Item Code	Description
1	2102-0425070	**SPECIAL BACKFILL**
		Item is for paved shoulder and shoulder strengthening construction. See Detail 7156 Modified on Sheet B.1,
		Detail WHKS-1 on Sheet B.2, and Tab. 112-9 on Sheet C.6. Bid item is increased by 5% for irregularities.
-	-	-
2	2102-2625000	**EMBANKMENT-IN-PLACE**
		Item is for shoulder grading adjacent to steel beam guardrail installation. See Tab. 107-23 on Sheet C.3.
		Bid item does not include shrinkage.
-	-	-
3	2122-5500090	**PAVED SHOULDER, HOT MIX ASPHALT MIXTURE, 9 IN.**
		Item is for paved shoulders adjacent to steel beam guardrail installation. See Detail 7156 Modified on
		Sheet B.1 and Tab. 112-9 on Sheet C.6.
-	-	-
4	2122-7450080	**SHOULDER STRENGTHENING, OPTIONAL HOT MIX ASPHALT MIXTURE OR PORTLAND CEMENT CONCRETE, 8 IN.**
		See Detail WHKS-1 on Sheet B.2.
-	-	-
5	2123-7450020	**SHOULDER FINISHING, EARTH**
		Item is for shaping earth material at shoulders adjacent to guardrail. See Tab. 112-9 on Sheet C.6.
-	-	-
6	2213-2713300	**EXCAVATION, CLASS 13, FOR WIDENING**
		Item is for removal of existing granular shoulder and shoulder subbase material. See Detail WHKS-1 on Sheet B.2
		for material removed for shoulder strengthening and Tab. 112-9 on Sheet C.6 for material removed for paved
		shoulder adjacent to guardrail. Removal of paved shoulder materail shall be payed for as "Removal of Pavement".
-	-	-
7	2301-0690202	**BRIDGE APPROACH, BR-202**
		See Tab. 112-6 on Sheet C.6.
-	-	-
8	2412-0000100	**LONGITUDINAL GROOVING IN CONCRETE**
		See Tab. 100-28 on Sheet C.3.
-	-	-
9	2505-4008120	**REMOVAL OF STEEL BEAM GUARDRAIL**
		See Tab. 110-7A on Sheet C.5.
-	-	-
10	2505-4008300	**STEEL BEAM GUARDRAIL**
11	2505-4008410	**STEEL BEAM GUARDRAIL BARRIER TRANSITION SECTION, BA-201**
12	2505-4021010	**STEEL BEAM GUARDRAIL END ANCHOR, BOLTED**
13	2505-4021720	**STEEL BEAM GUARDRAIL TANGENT END TERMINAL, BA-205**

100-4A
10-29-02

ESTIMATE REFERENCE INFORMATION

Item No.	Item Code	Description
		See Tab. 108-8A on Sheet C.4.
-	-	-
14	2510-6745850	**REMOVAL OF PAVEMENT**
		See Tab. 110-1 on Sheet C.5. See Tab. 102-5 on Sheet C.3 for existing pavement information.
-	-	-
15	2526-8285000	**CONSTRUCTION SURVEY**
-	-	-
16	2527-9263109	**PAINTED PAVEMENT MARKINGS, WATERBORNE OR SOLVENT-BASED**
17	2527-9263131	**WET, RETROREFLECTIVE REMOVABLE TAPE MARKINGS**
18	2527-9263180	**PAVEMENT MARKINGS REMOVED**
		See Tab. 108-22 on Sheet C.4.
-	-	-
19	2528-8400048	**TEMPORARY BARRIER RAIL, CONCRETE**
		See Detail 8212 on Sheet B.2 and Tab. 108-33 on Sheet C.5.
-	-	-
20	2528-8400256	**TEMPORARY TRAFFIC SIGNALS**
		See Tab. 108-28 on Sheet C.5.
-	-	-
21	2528-8445110	**TRAFFIC CONTROL**
		See Sheet J.1.
-	-	-
22	2528-8445113	**FLAGGERS**
-	-	-
23	2551-0000110	**TEMP CRASH CUSHION**
		See Detail 8212 on Sheet B.2 and Tab. 108-30 on Sheet C.5.
-	-	-
24	2602-0000320	**PERIMETER AND SLOPE SEDIMENT CONTROL DEVICE, 20 IN. DIA.**
25	2602-0000071	**REMOVAL OF PERIMETER AND SLOPE SEDIMENT DEVICE**
		See Tab. 100-19 on Sheet C.3. The tabulation includes estimated locations for placemenet of Perimeter and Slope
		Sediment Control Device, 20 In. Dia." to address possible erosion during construction. Verify the specific
		locations with the Engineer prior to beginning placement. Bid item includes 25% additional quantity for field
		adjustments and replacements. Use Perimeter and Slope Sediment Control Devices fabricated using wood excelsior.
-	-	-

Design No. 120
File No. 31500

105-4
10-18-11

STANDARD ROAD PLANS

The following Standard Road Plans apply to construction work on this project.

Number	Date	Title
BA-200	04-16-19	Steel Beam Guardrail Components
BA-201	04-18-17	Steel Beam Guardrail Barrier Transition Section (MASH TL-3)
BA-202	10-20-15	Steel Beam Guardrail Bolted End Anchor
BA-205	04-19-16	Steel Beam Guardrail Tangent End Terminal (MASH TL-3)
BA-250	10-18-16	Steel Beam Guardrail Installation at Concrete Barrier or Bridge End Post (MASH TL-3)
BA-401	10-15-19	Temporary Barrier Rail (Precast Concrete)
BA-500	04-19-16	Temporary Crash Cushions Sand Barrel
BR-202	10-17-17	Double Reinforced 10" Approach with Variable Depth Paving Notch
BR-211	10-17-17	Bridge Approach (Abutting PCC or Composite Pavement)
DR-306	10-16-18	Precast Concrete Headwall for Subdrain Outlets
EC-204	04-18-17	Perimeter and Slope Sediment Control Devices
EC-502	04-21-15	Seeding in Rural Areas
EW-301	10-20-15	Guardrail Grading
PM-110	10-16-18	Line Types
PV-101	04-16-19	Joints
SI-173	04-19-16	Object Markers
SI-211	10-18-16	Object Marker and Delineator Placement with Guardrail
TC-1	10-15-19	Work Not Affecting Traffic (Two-Lane or Multi-Lane)
TC-202	04-21-15	Work Within 15 ft of Traveled Way
TC-213	10-15-19	Lane Closure with Flaggers
TC-217	10-18-16	Lane Closure with Signals and TBR

232-3A
04-16-19

EROSION CONTROL (RURAL SEEDING)

Following the completion of work in a disturbed area and according to the seeding dates in Section 2601 of the Standard Specifications, place seed, fertilizer, and mulch on the disturbed area lying 8 feet adjacent to shoulder and median as follows:

Place seed and fertilize according to the requirements of Article 2601.03,C,3 and Section 4169 of the Standard Specifications.

Place mulch according to the requirements of Articles 2601.03,E,2,a and 4169.07,A of the Standard Specifications.

Preparing the seedbed, furnishing and applying seed, fertilizer, and mulch are all incidental to mobilization and will not be paid for separately.

232-3C
04-16-19

EROSION CONTROL (NATIVE GRASS SEEDING)

Following the completion of work in a disturbed area and according to the seeding dates in Section 2601 of the Standard Specifications, place seed and mulch on the disturbed area lying 8 feet or more beyond the shoulder as follows:

SEED MIX:

Big bluestem (Andropogon geradii)	6 lbs. PLS/Acre (7.0 kg/ha)
Indiangrass (Sorghastrum nutans)	6 lbs. PLS/Acre (7.0 kg/ha)
Little bluestem (Schizachyrium scoparium)	6 lbs. PLS/Acre (7.0 kg/ha)
Partridge Pea (Chamaecrista fasciculata)	4 lbs. PLS/Acre (4.5 kg/ha)
Sideoats grama (Bouteloua curtipendula)	4 lbs. PLS/Acre (4.5 kg/ha)
Canada wildrye (Elymus canadensis)	2 lbs. PLS/Acre (2.2 kg/ha)
Switchgrass (Panicum virgatum)	1 lbs. PLS/Acre (1.1 kg/ha)
Oats (Avena sativa)	32 lbs./Acre (36.0 kg/ha)

Furnish Big bluestem, Indiangrass, Canada wildrye and Little bluestem that is debearded or equal to facilitate the application of seed.

Furnish seed certified as Source Identified Class (Yellow Tag) Source G0-Iowa. Oats are excluded from this requirement.

Place seed according to the requirements of Article 4169.02 of the Standard Specifications.

Place mulch according to the requirements of Articles 2601.03,E,2,a and 4169.07,A of the Standard Specifications.

Preparing the seedbed, furnishing and applying seed and mulch are incidental to mobilization and will not be paid for seperately.

111-25
10-18-11

INDEX OF TABULATIONS

Tabulation	Tabulation Title	Sheet No.
A Sheets		
	INDEX OF SHEETS	A.1
C Sheets		
100-0A	ESTIMATED ROADWAY QUANTITIES (1 DIVISION PROJECT)	C.1
100-1D	PROJECT DESCRIPTION	C.1
100-4A	ESTIMATE REFERENCE INFORMATION	C.1 - C.1
100-19	PERIMETER AND SLOPE SEDIMENT CONTROL DEVICE	C.3
100-28	LONGITUDINAL GROOVING	C.3
102-5	EXISTING PAVEMENT	C.3
105-4	STANDARD ROAD PLANS	C.2
107-23	GRADING FOR GUARDRAIL INSTALLATIONS	C.3
108-8A	STEEL BEAM GUARDRAIL AT CONCRETE BARRIER OR BRIDGE RAIL END SECTION	C.4
108-22	PAVEMENT MARKING LINE TYPES	C.4
108-28	TEMPORARY TRAFFIC SIGNALS	C.5
108-30	CRASH CUSHIONS	C.5
108-33	TEMPORARY BARRIER RAIL	C.5
110-1	REMOVAL OF PAVEMENT	C.5
110-7A	REMOVAL OF STEEL BEAM GUARDRAIL	C.5
111-25	INDEX OF TABULATIONS	C.2
112-6	BRIDGE APPROACH SECTION	C.6
112-9	SHOULDERS	C.6
J Sheets		
108-23A	TRAFFIC CONTROL PLAN	J.1
108-25	511 TRAVEL RESTRICTIONS	J.1
108-26A	STAGING NOTES	J.1

Design No. 120
File No. 31500

100-19
04-19-16

PERIMETER AND SLOPE SEDIMENT CONTROL DEVICE

Possible Standards: EC-204

Location			Length of Installation			Remarks
Begin Station	End Station	Side	9 inch Dia LF	12 inch Dia LF	20 inch Dia LF	
489+57.00	490+98.00	Lt			180.0	Stage 2
491+65.00	493+56.00	Lt			220.0	Stage 2
489+07.00	490+98.00	Rt			220.0	Stage 3
491+65.00	493+06.00	Rt			180.0	Stage 3
					800.0	Total
					200.0	25% Maintanence
					1000.0	Total Bid Quantity

100-28
10-19-10

LONGITUDINAL GROOVING

Location	Total SY	Remarks
491+12.33	203.9	West Approach
491+31.50	168.0	Bridge
491+50.67	203.9	East Approach
	575.9	Total

102-5
04-18-17

EXISTING PAVEMENT

No.	Location					Year	Type	Project Number	Surface		Base		Subbase		Removal		Coarse Aggregate			Reinforcement	Remarks
	County	Route	Dir. of Travel	Begin Ref. Loc. Sign	End Ref. Loc. Sign				Type	Depth IN	Type	Depth IN	Type	Depth IN	Type	Depth IN	Source	Type	Durability Class	Type	
1	HICKASAW	US 18	Both	227.56	230.3	1935	PCCP	Fa-160	PCC	10-7-10											
2						1959	HMA	Df-76(6)	HMA	3											
3						1983	HMA	FR-18-7(31)--2G-19	HMA	1.5	HMA	1.5			Mill	1.5					
4						2004	HMA	NHSN-18-7(49)--2R-19	HMA	2	HMA	2									

107-23
10-18-11

GRADING FOR GUARDRAIL INSTALLATIONS

(1) Lane(s) to which the installation is adjacent.

Refer to EW-301

Location				Foreslope at Guardrail	Dimensions (Feet)									Earthwork		Remarks
No.	(1) Direction of Traffic	Station	Side		X1	Y1	X2	Y2	X3	Y3	X4	Y4	Z	Excavation Class 10 CY	Embankment In Place CY	
1	WB	490+97.08	Lt	3:1	38.9	5.0					88.5	7.0	49.5		30.0	Stage 2
2	WB	491+65.92	Lt	3:1	88.6	5.0					138.5	7.0	49.5		40.0	Stage 2
3	EB	490+97.08	Rt	3:1	88.6	5.0					138.5	7.0	49.5		40.0	Stage 3
4	EB	491+65.92	Rt	3:1	38.9	5.0					88.5	7.0	49.5		30.0	Stage 3
															140.0	Total

Design No. 120
File No. 31500

STEEL BEAM GUARDRAIL AT CONCRETE BARRIER OR BRIDGE RAIL END SECTION

Possible Standards: BA-200, BA-201, BA-202, BA-205, BA-206, BA-210, BA-211, BA-221, BA-225, BA-250, BA-260, LS-625, LS-626, LS-630, LS-635, SI-172, SI-173 and SI-211.

(1) Lane(s) to which the obstacle is adjacent.
(2) Not a bid item. Incidental to guardrail installation.

Location					Layout Lengths				Long-Span System		Delineators and Object Markers (2)					Bid Items											
					BA-250, BA-260, LS-630, or LS-635															BA-250 or LS-630					BA-260 or LS-635		
No.	Direction of Traffic	(1) Side O = Outside M = Median	Station	Offset	VT1	VF	VT2	ET			SI-211	Delineator SI-172 Type 1	Object Marker SI-173 Type 2	Type 3		Bolted End Anchor		Post Adapter	Steel Beam Guardrail	Barrier Transition Section	End Terminal Tangent	End Terminal Flared	End Terminal Tangent	End Terminal Flared	Barrier Transition Section	End Terminal Tangent	Remarks
									BA-211			White	OM2-2	OM3-L	OM3-R	BA-202		BA-210	BA-200	BA-201	BA-205	BA-206	LS-625	LS-626	BA-221	BA-225	
				FT	LF	LF	LF	LF	STATION	TYPE	TYPE	EACH	EACH	EACH	EACH	TYPE	EACH	EACH	LF	EACH	EACH	EACH	EACH	EACH	EACH	EACH	
1	WB	O	490+97.08	-21.5	40.625			47.7			3			1		B	1		0.0	1	1						Stage 2
2	WB	O	491+65.92	-21.5	90.625			47.7			3				1	B	1		50.0	1	1						Stage 2
3	EB	O	490+97.08	-21.5	90.625			47.7			3				1	B	1		50.0	1	1						Stage 3
4	EB	O	491+65.92	-21.5	40.625			47.7			3			1		B	1		0.0	1	1						Stage 3
																	4		100.0	4	4						Total

PAVEMENT MARKING LINE TYPES

See PM-110

*BCY4 - Place on the same side of the roadway to match existing markings near the project.
**NPY4 - For estimating purposes only. No Passing Zone Lines will be located in the field.
***MNY4 - Factor of 1.00 as value includes number of 4-inch passes to cover median nose area.

BCY4: Broken Centerline (Yellow) @ 0.25
DCY4: Double Centerline (Yellow) @ 2.00
NPY4: No Passing Zone Line (Yellow) @ 1.25
BLW4: Broken Lane Line (White) @ 0.25
ELW4: Edge Line Right (White) @ 1.00
ELY4: Edge Line Left (Yellow) @ 1.00
SLW2: Stop Line (White) @ 6.00

Location								Length by Line Type (Unfactored)															Remarks
Road ID	Station to Station		Dir. of Travel	Marking Type	Side L	Side C	Side R	BCY4*	DCY4	NPY4**	BLW4	ELW4	ELY4	SLW2									
								STA	STA	STA	STA	STA	STA	STA	STA	STA	STA	STA	STA	STA	STA	STA	
US 18	487+66.43	494+96.57	BOTH	Removal of Paint	X							7.30											Prior to Stage 2
	487+66.43	494+96.57	BOTH	Removal of Paint		X		7.30															Prior to Stage 2
	487+66.43	487+66.43	BOTH	Waterborne/Solvent Paint			X							0.12									Stage 2
	492+46.57	493+31.57	BOTH	Waterborne/Solvent Paint		X						0.85											Stage 2
	493+31.57	494+96.57	BOTH	Wet Retroreflective Removable Tape	X							1.65											Stage 2
	494+96.57	494+96.57	BOTH	Waterborne/Solvent Paint	X									0.12									Stage 2
	492+46.57	493+31.57	BOTH	Removal of Paint		X						0.85											Stage 3
	493+31.57	494+96.57	BOTH	Removal of Removable Tape	X							1.65											Stage 3
	487+66.43	494+96.57	BOTH	Removal of Paint			X					7.30											Stage 3
	487+66.43	489+31.43	BOTH	Wet Retroreflective Removable Tape			X					1.65											Stage 3
	489+31.43	490+16.43	BOTH	Waterborne/Solvent Paint		X						0.85											Stage 3
	487+66.43	494+96.57	BOTH	Waterborne/Solvent Paint	X							7.30											Stage 3
	487+66.43	487+66.43	BOTH	Removal of Paint			X							0.12									After Stage 3
	487+66.43	489+31.43	BOTH	Removal of Removable Tape			X					1.65											After Stage 3
	489+31.43	490+16.43	BOTH	Removal of Paint		X						0.85											After Stage 3
	494+96.57	494+96.57	BOTH	Removal of Paint	X									0.12									After Stage 3
	487+66.43	494+96.57	BOTH	Waterborne/Solvent Paint		X		7.30															After Stage 3
	487+66.43	494+96.57	BOTH	Waterborne/Solvent Paint			X					7.30											After Stage 3
				Factored Total: Waterborne/Solvent Paint				1.83	-	-	-	16.30	-	1.44	-	-	-	-	-	-	-	-	
				Factored Total: Wet Retroreflective Removable Tape				-	-	-	-	3.30	-	-	-	-	-	-	-	-	-	-	
				Factored Total: Removal of Paint				1.83	-	-	-	16.30	-	1.44	-	-	-	-	-	-	-	-	
				Factored Total: Removal of Removable Tape				-	-	-	-	3.30	-	-	-	-	-	-	-	-	-	-	
				Bid Quantity: Painted Pavement Markings, Waterborne or Solvent-Based							19.57												
				Bid Quantity: Wet Retroreflective Removable Tape Markings							3.30												
				Bid Quantity: Pavement Markings Removed							19.57												
				Incidental Removal of Removable Tape							3.30												

Design No. 120
File No. 31500

108-28
08-01-08

TEMPORARY TRAFFIC SIGNALS

No.	Location Station	Type: One Lane Traffic	Type: Haul Road	Type: Intersection	Remarks
1	491+31.50	X			Stage 2 & 3
		1			Total

108-30
04-16-13

CRASH CUSHIONS

* Bid Item
(1) Lane(s) to which the installation is adjacent.
(2) Complete this section when using the Temporary Crash Cushion bid item and Earthwork is needed for Sand Barrel placement. Refer to BA-500

No.	(1) Direction of Traffic	Location Station	Side	Obstacle Width (FT)	Crash Cushion (Select One)*: Temporary	Temporary Redirective	Temporary Severe Use	Permanent	Permanent Severe Use	Sand Barrel Details (2): V Length (FT)	W Length (FT)	X Length (FT)	Y Length (FT)	Z Length (FT)	Earthwork*: Excavation Class 10 (CY)	Embankment in Place (CY)	Spare Parts Kit (Select One)*: Permanent (EACH)	Permanent Severe Use (EACH)	Obstacle Description	Remarks
1	EB	489+65.28	Lt	1.88	1						24.25	5.25	3.25	12.00					Temporary Barrier Rail	Stage 2
2	EB	492+97.72	Lt	1.88	1						24.25	5.25	3.25	12.00					Temporary Barrier Rail	Stage 2
3	WB	489+65.28	Rt	1.88	1						24.25	5.25	3.25	12.00					Temporary Barrier Rail	Stage 3
4	WB	492+97.72	Rt	1.88	1						24.25	5.25	3.25	12.00					Temporary Barrier Rail	Stage 3
					4															Total

108-33
10-15-19

TEMPORARY BARRIER RAIL

Possible Standards: BA-401 Possible Detail: 560-7

* Not a bid item. Anchorage requirements are based on TBR locations shown in the plans. TBR alignments that vary from what is shown in the plans may result in additional TBR sections requiring anchorage.

No.	Station to Station		Length (LF)	(Select One): Concrete BA-401	Steel 560-7	Anchored* (Y/N)	Modular Glare Screen System (Y/N)	Remarks
1	489+65.28	492+97.72	325.0	X		No	No	Stage 2
2	489+65.28	492+97.72	325.0	X		No	No	Stage 3
			650.0					Total

110-1
04-16-13

REMOVAL OF PAVEMENT

Refer to Tabulation 102-5

* Not a Bid Item

Begin Station	End Station	Side	Pavement Type	Area (SY)	Saw Cut* (LF)	Remarks
489+88.47	490+42.33	Lt	HMA	23.9	4.0	Stage 2 existing shoulder strengthening
490+42.33	491+12.33	Lt	PCC	113.6	11.0	Stage 2 existing west approach pavement
491+50.67	492+20.67	Lt	HMA/PCC	93.3	11.0	Stage 2 existing east approach pavement
490+42.33	491+12.33	Rt	PCC	113.6	13.0	Stage 3 existing west approach pavement
491+50.67	491+70.67	Rt	HMA/PCC	8.8	4.0	Stage 3 shoulder strengthening constructed in Stage 1.
491+50.67	492+20.67	Rt	HMA/PCC	93.3	13.0	Stage 3 existing east approach pavement
				446.7	56.0	Total

110-7A
04-17-12

REMOVAL OF STEEL BEAM GUARDRAIL

(1) Lane(s) to which the installation is adjacent.
(2) Includes length of End Terminals and End Anchors.

No.	(1) Direction of Traffic	Location: Station to Station		Side	Removal of Guardrail (2) (LF)
1	WB	490+44.00	492+19.00	Lt	175.0
2	EB	490+44.00	492+19.00	Rt	175.0
			Total		350.0

Design No. 120
File No. 31500

BRIDGE APPROACH SECTION

Refer to the BR Series.

* Not a bid item

Location				Approach Pavement					Standard Road Plans BR Series			Subdrain					*	*	*	
Bridge Station	End	Skew Ahead Degrees		(T) Thickness	Pay Length	Non-Reinf. Pavement Area	Single-Reinf. Pavement Area	Double-Reinf. Pavement Area	Approach	Fixed or Movable Abutment	Abutting Pavement	* Perforated Subdrain 4"	* Subdrain Outlet		* Porous Backfill	* Class 'A' Crushed Stone Backfill	Modified Subbase	Polymer Grid	Special Backfill	Remarks
		LEFT	RIGHT	Inches	FT	SY	SY	SY				LF	STA	Side	CY	CY	TON	SY	TON	
491+31.50	Near			10.0	70.0	40.0	26.7	47.4	BR-202	Movable	BR-211	23.0			1.1		131.290	135.8		Stage 2 west approach
491+31.50	Far			10.0	70.0	40.0	26.7	47.4	BR-202	Movable	BR-211	23.0			1.1		131.290	135.8		Stage 2 east approach
491+31.50	Near			10.0	70.0	40.0	26.7	47.4	BR-202	Movable	BR-211	32.0	490+41.93	Rt	1.1	0.2	131.290	135.8		Stage 3 west approach
491+31.50	Far			10.0	70.0	40.0	26.7	47.4	BR-202	Movable	BR-211	32.0	492+00.27	Rt	1.1	0.2	131.290	135.8		Stage 3 east approach
								456.4				110.0			4.4	0.4	525.160	543.2		Total

SHOULDERS

(1) Lane(s) to which the shoulder is adjacent.
(2) Bid Item
(3) Applies only for Paved Shoulders constructed on project with existing granular shoulders.
(4) Does not include shrink.

Calculations assume a HMA unit weight (lbs/cf) of 145, a Special Backfill unit weight (lbs/cf) of 140, and a Granular Shoulder unit weight (lbs/cf) of 140.

Location					Quantities																			
Road Identification	(1) Direction Of Traffic	Station to Station		Side	(P) Width	(G) Width	(L) Length	Class 13 (3) Excavation	Hot Mix Asphalt		Binder	Paved Shoulder	Reinforced Paved Shoulder	Special Backfill HMA Alternate		Special Backfill PCC Alternate		Modified Subbase	Granular Shoulder		Earth Shoulder Construction Alternates			Remarks
					FT	FT	FT	CY (2)	TON	TON/STA	TONS	SY (2)	SY (2)	TON (2)	TON/STA	TON (2)	TON/STA	CY (2)	TON (2)	TON/STA	STA (2)	HMA CY (4)	PCC CY (4)	
US 18	WB	489+88.47	490+08.47	Lt	12.5		20.0	4.5	13.674	68.368	0.820	27.8		9.3	46.3						0.2			Stage 2
	WB	490+08.47	490+58.14	Lt	12.5 to 10.5		49.7	19.1	31.257	62.930	1.875	63.5		21.3	42.8						0.5			Stage 2
	WB	490+58.14	490+92.33	Lt	10.5		34.2	15.5	19.657	57.493	1.179	39.9		13.5	39.3						0.3			Stage 2
	WB	491+70.67	492+54.78	Lt	10.5		84.1	39.1	48.357	57.493	2.901	98.1		33.1	39.3						0.8			Stage 2
	WB	492+54.78	493+04.45	Lt	10.5 to 12.5		49.7	19.1	31.257	62.930	1.875	63.5		21.3	42.8						0.5			Stage 2
	WB	493+04.45	493+24.45	Lt	12.5		20.0					27.8									0.2			Stage 2
	EB	489+38.55	489+58.55	Rt	8.5		20.0	3.7	9.324	46.618	0.559	18.9		6.5	32.3						0.2			Stage 3
	EB	489+58.55	490+08.22	Rt	8.5 to 6.5		49.7	9.9	20.454	41.180	1.227	41.4		14.3	28.8						0.5			Stage 3
	EB	490+08.22	490+92.33	Rt	6.5		84.1	23.6	30.063	35.743	1.804	60.7		21.3	25.3						0.8			Stage 3
	EB	491+70.67	492+04.78	Rt	6.5		34.1	9.3	12.192	35.743	0.732	24.6		8.6	25.3						0.3			Stage 3
	EB	492+04.78	492+54.45	Rt	6.5 to 8.5		49.7	16.1	20.454	41.180	1.227	41.4		14.3	28.8						0.5			Stage 3
	EB	492+54.45	492+74.45	Rt	8.5		20.0	4.5	9.324	46.618	0.559	18.9		6.5	32.3						0.2			Stage 3
								164.4				526.4		169.9							5.2			Total

Design No. 120
File No. 31500

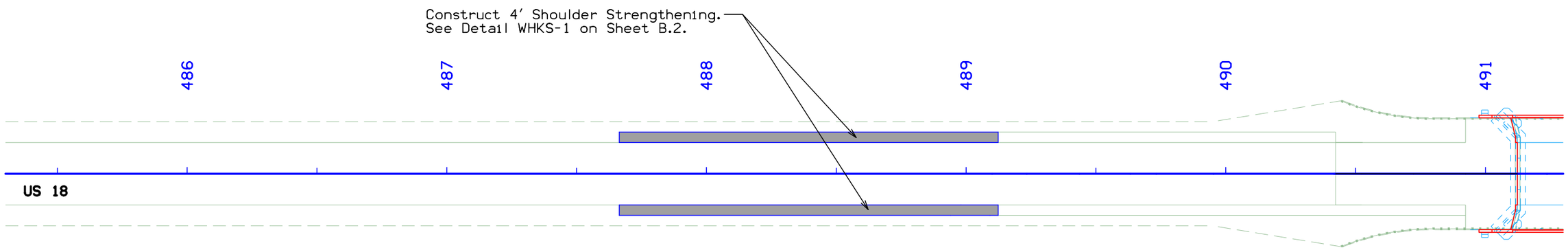

LEGEND

- Pavement Removal
- Proposed Approach Pavement
- Proposed Shoulder Pavement
- Previously Constructed Pavement
- Proposed Guardrail Grading

0 FEET 20

Stage 1 Construction

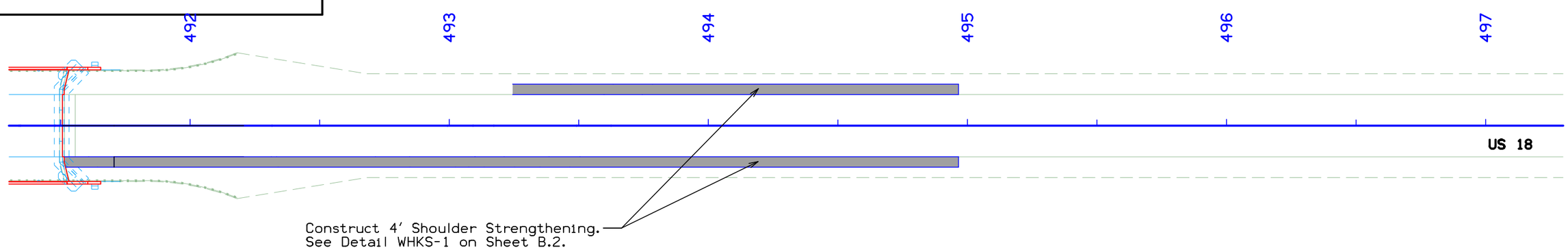

0 FEET 20

Stage 1 Construction

Design No. 120
File No. 31500

FILE NO.	ENGLISH	DESIGN TEAM WHKS & CO.	CHICKASAW COUNTY	PROJECT NUMBER BRFN-018-7(64)--39-19	SHEET NUMBER D.1

4:58:42 PM 8/5/2019 bchezick L:\Dept\6\8500.04 Bridge Overlays\Chickasaw 120\Roadway\CADD Files\Sheet Files\SHT_19018064D01.dgn

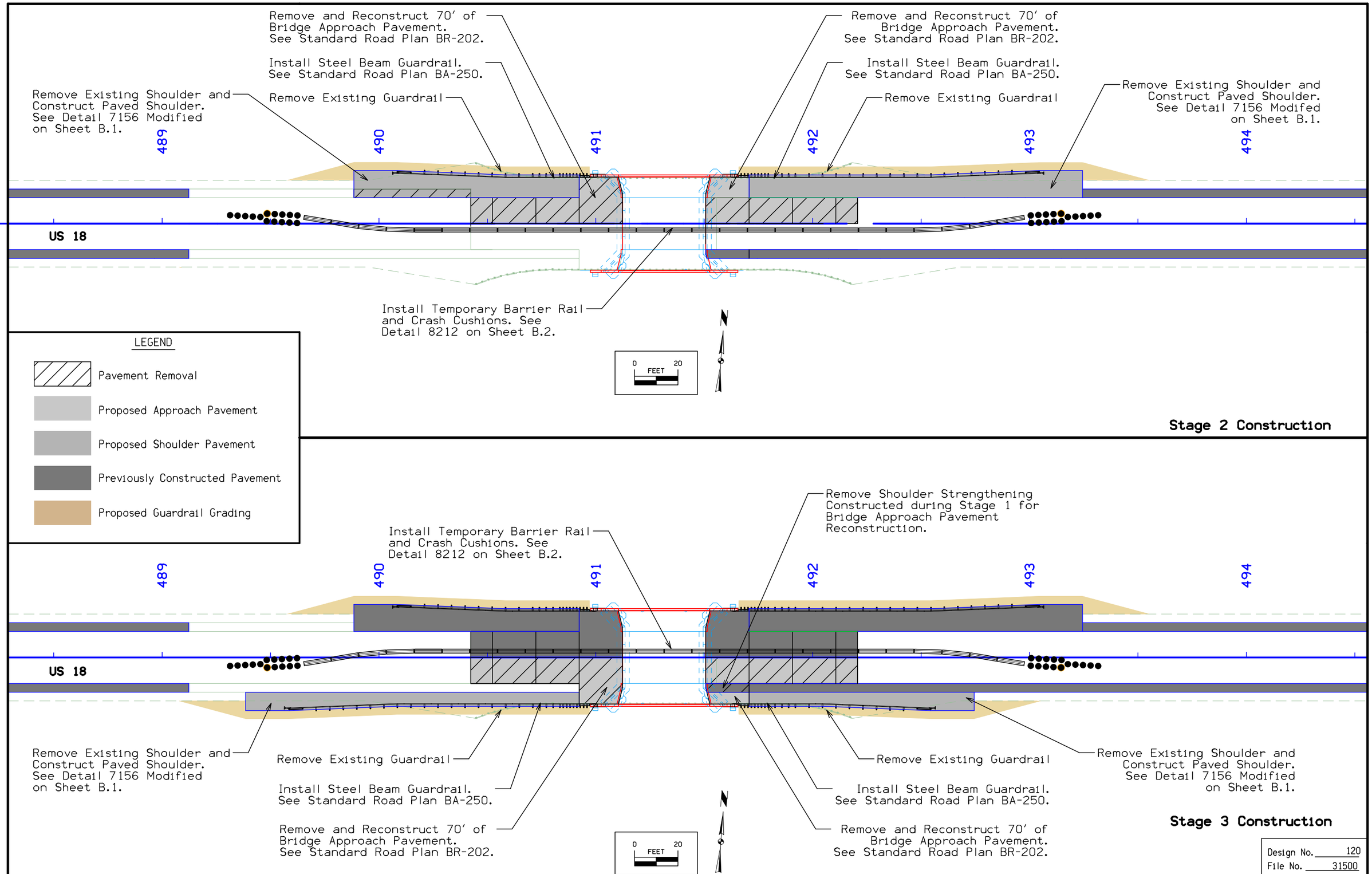

Design No. 120
File No. 31500

FILE NO.	ENGLISH	DESIGN TEAM WHKS & CO.	CHICKASAW COUNTY	PROJECT NUMBER BRFN-018-7(64)--39-19	SHEET NUMBER D.2

8:51:14 AM 8/6/2019 bchezick L:\Dept\6\8500.04 Bridge Overlays\Chickasaw 120\Roadway\CADD Files\Sheet Files\SHT_19018064D01.dgn

108-23A
08-01-08

TRAFFIC CONTROL PLAN

Maintain one lane traffic at all times. See staging notes for additional details.

108-26A
08-01-08

STAGING NOTES

STAGE 1:
Traffic Control:
Traffic Control to utilize the applicable Standard Road Plans for Traffic Control that are listed in Tab 105-4 on Sheet C.2.

Construction:
Construct shoulder strengthening as noted on Sheet D.1.

STAGE 2:
Traffic Control:
Maintain traffic utilizing the applicable Standard Road Plans for Traffic Control that are listed in Tab 105-4 on Sheet C.2.

Construction:
Left guardrail removal and installation, left paved shoulder construction and grading, and left 21.5' of bridge approach pavement reconstruction as noted on Sheet D.2. Construct left 21.5' of bridge deck overlay as noted in Sheets 1-6.

STAGE 3:
Traffic Control:
Maintain traffic utilizing the applicable Standard Road Plans for Traffic Control that are listed in Tab 105-4 on Sheet C.2.

Construction:
Right guardrail removal and installation, right paved shoulder construction and grading, and right 21.5' of bridge approach pavement reconstruction as noted on Sheet D.2. Construct right 21.5' of bridge deck overlay as noted in Sheets 1-6.

108-25
10-21-14

511 TRAVEL RESTRICTIONS

Route	Direction	County	Location Description	Feature Crossed	Object Type	Maint. Bridge No., Structure ID, or FHWA No.	Type of Restriction	Existing Measurement	Construction Measurement	Construction Measurement as Signed	Projected As Built Measurement	Remarks
US 18	EB/WB	Chickasaw	Bridge over the East Branch of the Little Wapsipinicon River	Bridge	Traffic Control Device	19640	Horizontal	43'-0"	17'-7 1/2"	16'-7"	43'-0"	Stg. 2
US 18	EB/WB	Chickasaw	Bridge over the East Branch of the Little Wapsipinicon River	Bridge	Traffic Control Device	19640	Horizontal	43'-0"	17'-7 1/2"	16'-7"	43'-0"	Stg. 3

Design No. 120
File No. 31500

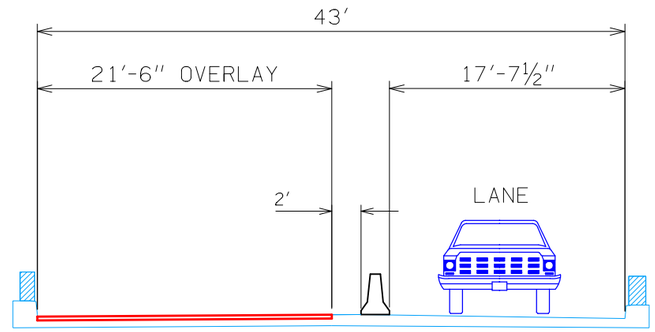

US 18

STAGE 3
(LOOKING UP STATION)

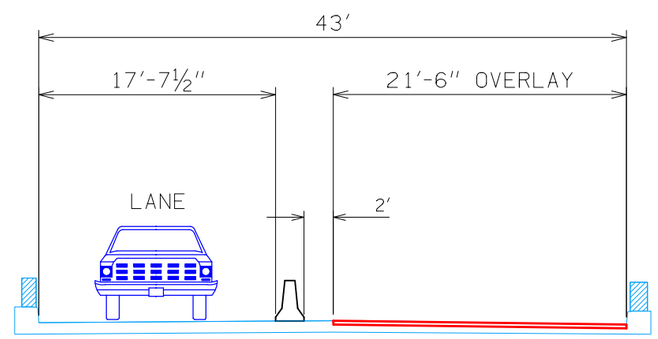

US 18

STAGE 2
(LOOKING UP STATION)

Staging Typical Section

Design No. 120
File No. 31500

FILE NO.	ENGLISH	DESIGN TEAM **WHKS & CO.**	**CHICKASAW** COUNTY	PROJECT NUMBER **BRFN-018-7(64)--39-19**	SHEET NUMBER **J.2**

5:01:26 PM 8/5/2019 bchezick L:\Dept\6\8500.04 Bridge Overlays\Chickasaw 120\Roadway\CADD Files\Sheet Files\SHT_19018064J01.dgn