BRIDGE REPLACEMENT – PPCB
BROS–SWAP–C067(87)––SE–67

LETTING DATE 11/19/19

TRAFFIC CONTROL PLAN

THIS ROAD WILL BE CLOSED TO THROUGH TRAFFIC DURING CONSTRUCTION. LOCAL TRAFFIC TO ADJACENT PROPERTIES WILL BE MAINTAINED AS PROVIDED FOR IN ARTICLE 1107.08 OF THE CURRENT STANDARD SPECIFICATIONS. TEMPORARY TRAFFIC CONTROL DEVICES FOR THE DETOUR ROUTE WILL BE PROVIDED, INSTALLED, AND MAINTAINED BY THE COUNTY.

SECTION 404 PERMIT AND CONDITIONS

281–1
10–18–16

CONSTRUCT THIS PROJECT ACCORDING TO THE REQUIREMENTS OF U.S. ARMY CORPS OF ENGINEERS NATIONWIDE PERMIT NO. 14, PERMIT NO. CEMVR–OD–P–2019–0551. A COPY OF THIS PERMIT IS AVAILABLE FROM THE IOWA DOT WEBSITE (http://www.envpermits.iowadot.gov/). THE U.S. ARMY CORPS OF ENGINEERS RESERVES THE RIGHT TO VISIT THE SITE WITHOUT PRIOR NOTICE.

PERMITS

THIS PROJECT IS COVERED BY IOWA DNR FLOODPLAIN CONSTRUCTION PERMIT NO. FP2019–120.

THIS PROJECT IS COVERED BY THE IOWA DEPARTMENT OF NATURAL RESOURCES NPDES GENERAL PERMIT NO. 2. THE CONTRACTOR SHALL CARRY OUT THE TERMS AND CONDITIONS OF GENERAL PERMIT NO. 2 AND THE STORM WATER POLLUTION PREVENTION PLAN WHICH IS A PART OF THESE CONTRACT DOCUMENTS. REFER TO SECTION 2602 OF THE STANDARD SPECIFICATIONS FOR ADDITIONAL INFORMATION.

DRAWING APPROVAL

ALL SHOP DRAWINGS THAT REQUIRE APPROVAL SHALL BE APPROVED BY THE MONONA COUNTY ENGINEER.

ADDRESS: 610 IOWA AVE., POB 236
ONAWA, IOWA 51040
TELEPHONE: (712)433–2284
EMAIL: Mocoeng@mononacounty.org

THESE SHOP DRAWINGS SHALL NOT BE SENT TO IOWA D.O.T. OFFICE OF BRIDGE DESIGN.

IOWADOT
Highway Division

PLANS OF PROPOSED IMPROVEMENTS ON THE

SECONDARY ROAD SYSTEM
MONONA COUNTY

PROJECT NO. BROS–SWAP–C067(87)––SE–67
BRIDGE REPLACEMENT – PPCB
E46 (245TH ST.) OVER SOLDIER RIVER

SCALES: AS NOTED

REFER TO THE PROPOSAL FORM FOR LIST OF APPLICABLE SPECIFICATIONS.

	TOTAL SHEETS
	18
PROJECT NUMBER	
BROS–SWAP–C067(87)––SE–67	
R.O.W. PROJECT NUMBER	
PROJECT IDENTIFICATION NUMBER	
FHWA STRUCTURE NO. 249830	

INDEX OF SHEETS

NO.	DESCRIPTION
A1	TITLE SHEET
C1	ESTIMATED PROJECT QUANTITIES
C1–2	ESTIMATED REFERENCE INFORMATION
C3	TABULATIONS
D1	PLAN AND PROFILE
G1	SURVEY SHEET
Q1	SOILS SHEET
R1–2	POLLUTION PREVENTION PLAN
U1–4	DETAIL SHEETS
V1	SITUATION PLAN
W1–3	CROSS SECTIONS – ROADWAY
X1	CROSS SECTIONS – CHANNEL

STANDARD ROAD PLANS

STANDARD ROAD PLANS ARE LISTED ON PLAN SHEET C1.

STANDARD BRIDGE PLANS

STANDARD BRIDGE PLANS ARE LISTED ON PLAN SHEET C1.

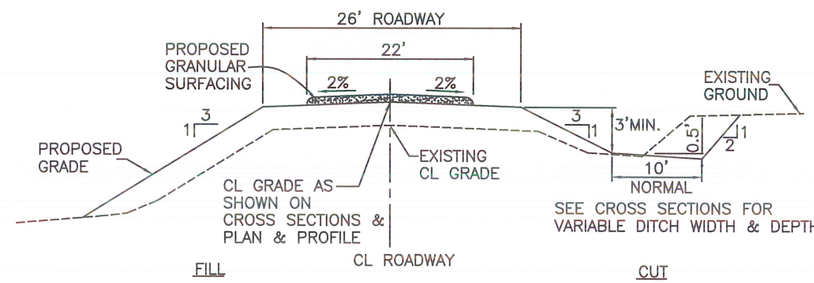

TYPICAL CROSS SECTION
NOT TO SCALE

STA. 28+36
PROPOSED 201'–4 x 24' PPCB BRIDGE
0° SKEW RT. AHEAD
B.O.P. STA. 26+97
E.O.P. STA. 36+00

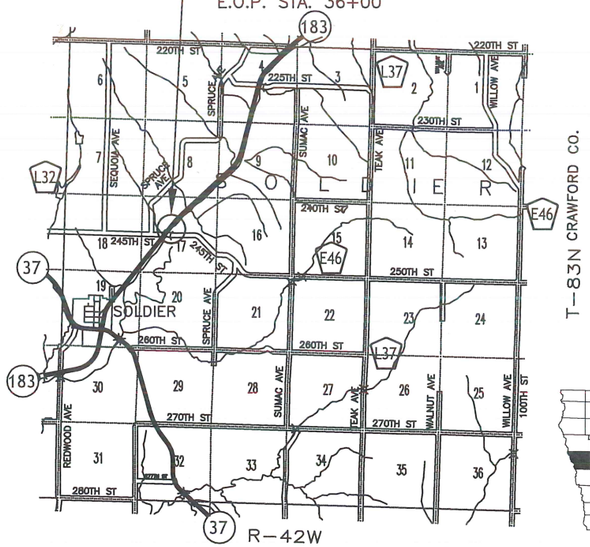

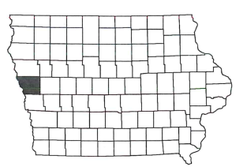

MONONA COUNTY

SUNDQUIST ENGINEERING, P.C.
910 7TH STREET, ONAWA, IA 51040
P712 423 3131 F712 433 3134
SUNDQUISTENGINEERING.COM

LOCATION MAP SCALE
0 1 2 3
SCALE IN MILES

IOWA ONE CALL
CALL BEFORE YOU DIG!
1-800-292-8989
www.iowaonecall.com
811 Know what's below. Call before you dig.

UTILITY CONTACT

LONG LINES BROADBAND
MILES PATTON
Phone: 712–271–5550
Email: mpatton@longlines.biz

04–30–02		101–4
DESIGN DATA RURAL		
2016 AADT	60	V.P.D.
2040 AADT	90	V.P.D.
201X DHV	X	V.P.H.
TRUCKS	X	%
TOTAL		
DESIGN ESALs		

Approved

BOARD OF SUPERVISORS

INDEX OF SEALS

SHEET NO.	NAME	TYPE
A1	PATRICK E. MOUW	PRIMARY SIGNATURE BLOCK
Q1	JED A. McINERNEY	GEOTECHNICAL DESIGN

MILEAGE SUMMARY

LOCATION	LIN. FT.	MILES
BOP STA. 26+97 TO EOP STA. 36+00	903.00	
DEDUCT BRIDGE AT STA. 28+36	201.33	
NET LENGTH OF ROADWAY	701.67	0.133

Approved

8/16/19
MONONA COUNTY ENGINEER DATE

LICENSED PROFESSIONAL ENGINEER PATRICK E. MOUW 20839 IOWA

I HEREBY CERTIFY THAT THIS ENGINEERING DOCUMENT WAS PREPARED BY ME OR UNDER MY DIRECT PERSONAL SUPERVISION AND THAT I AM A DULY LICENSED PROFESSIONAL ENGINEER UNDER THE LAWS OF THE STATE OF IOWA.

8/16/19
PATRICK E. MOUW, P.E. #20839 DATE

MY LICENSE RENEWAL DATE IS DECEMBER 31, 2019.

PAGES OR SHEETS COVERED BY THIS SEAL:
ALL EXCEPT Q1

DESIGN TEAM: PEM/TJG/TKK	ENGLISH	SE PROJECT NO. : 12219	FHWA NO. 249830	MONONA COUNTY	PROJECT NUMBER BROS–SWAP–C067(87)––SE–67	SHEET NUMBER A1

MONONA COUNTY

ESTIMATED PROJECT QUANTITIES

100–1A
07–15–97

Item No.	Item Code	Item	Unit	Total	As Built Qty.
1	2101–0850001	CLEARING AND GRUBBING	ACRE	0.6	
2	2102–2625000	EMBANKMENT–IN–PLACE	CY	3868.0	
3	2102–2710070	EXCAVATION, CLASS 10, ROADWAY AND BORROW	CY	2073.0	
4	2104–2710020	EXCAVATION, CLASS 10, CHANNEL	CY	609.8	
5	2105–8425015	TOPSOIL, STRIP, SALVAGE AND SPREAD	CY	1317.0	
6	2312–8260201	GRANULAR SURFACING ON ROAD, CLASS C GRAVEL	TON	334.9	
7	2401–6745625	REMOVAL OF EXISTING BRIDGE	LS	1.00	
8	2402–2720000	EXCAVATION, CLASS 20	CY	95	
9	2402–2721000	EXCAVATION, CLASS 21	CY	232	
10	2403–0100010	STRUCTURAL CONCRETE (BRIDGE)	CY	402.8	
11	2404–7775000	REINFORCING STEEL	LB	80805	
12	2407–0551363	BEAMS, PRETENSIONED PRESTRESSED CONCRETE, C63	EACH	8	
13	2407–0551371	BEAMS, PRETENSIONED PRESTRESSED CONCRETE, C71	EACH	4	
14	2408–7800000	STRUCTURAL STEEL	LB	3234	
15	2414–6424124	CONCRETE OPEN RAILING, TL–4	LF	432.7	
16	2417–1040030	CULVERT, CORRUGATED METAL ENTRANCE PIPE, 30 IN. DIA.	LF	42	
17	2501–0201057	PILES, STEEL, HP 10 X 57	LF	3180	
18	2501–6335010	PREBORED HOLES	LF	160	
19	2507–3250005	ENGINEERING FABRIC	SY	697.2	
20	2507–6800021	REVETMENT, CLASS B	TON	694.0	
21	2507–6875002	REVETMENT, REMOVE AND REPLACE	CY	37.1	
22	2518–6910000	SAFETY CLOSURE	EACH	2	
23	2524–9100030	OBJECT MARKER, TYPE 3	EACH	4	
24	2526–8285000	CONSTRUCTION SURVEY	LS	1	
25	2528–8445110	TRAFFIC CONTROL	LS	1.00	
26	2533–4980005	MOBILIZATION	LS	1.00	
27	2601–2634100	MULCHING	ACRE	1.5	
28	2601–2636015	NATIVE GRASS SEEDING	ACRE	0.2	
29	2601–2636043	SEEDING AND FERTILIZING (RURAL)	ACRE	1.3	
30	2602–0000020	SILT FENCE	LF	1143.8	
31	2602–0000030	SILT FENCE FOR DITCH CHECKS	LF	60.0	
32	2602–0010010	MOBILIZATIONS, EROSION CONTROL	EACH	1	

STANDARD ROAD PLANS

105–4
10–18–11

The following Standard Road Plans apply to construction work on this project.

NUMBER	DATE	TITLE
EC–201	10–15–19	SILT FENCE
EW–101	10–17–17	EMBANKMENT AND REBUILDING EMBANKMENTS
EW–102	10–20–15	ALLOWABLE PLACEMENT OF UNSUITABLE SOIL IN EMBANKMENTS
EW–501	10–20–15	RURAL ENTRANCE
SI–173	04–19–16	OBJECT MARKERS
TC–1	10–15–19	WORK NOT AFFECTING TRAFFIC (TWO–LANE OR MULTI–LANE)
TC–202	04–21–15	WORK WITHIN 15 FT OF TRAVELED WAY
TC–211	10–15–19	LANE CLOSURE ON LOW VOLUME ROADWAY
TC–252	04–19–16	ROUTES CLOSED TO TRAFFIC

INDEX OF TABULATIONS

111–25
10–18–11

Tabulation	Tabulation Title	Sheet No.
100–1A	ESTIMATED PROJECT QUANTITIES	C1
100–4A	ESTIMATE REFERENCE INFORMATION	C1–2
100–17	TABULATION OF SILT FENCE	C3
100–18	TABULATION OF SILT FENCES FOR DITCH CHECKS	C3
102–3	ACCESS POINTS AND SAFETY RAMPS	C3
105–4	STANDARD ROAD PLANS	C1
107–29	TABULATION OF TEMPLATE QUANTITIES AND ADJUSTMENTS	C3
108–13A	SAFETY CLOSURES	C3
110–12A	POLLUTION PREVENTION PLAN	R1–2
110–17	CLEARING AND GRUBBING	C3
111–25	INDEX OF TABULATIONS	C1
	PLACEMENT OF QUANTITIES	C3
	STANDARD BRIDGE PLANS	C1

STANDARD BRIDGE PLANS

Standard	Issued	Revised
H24–01–06	DECEMBER, 2006	05–13
H24–01A–06	DECEMBER, 2006	05–13
H24–02–06	DECEMBER, 2006	05–13
H24–03–06	DECEMBER, 2006	06–12
H24–04–06	DECEMBER, 2006	06–12
H24–06–06	DECEMBER, 2006	10–16
H24–08–06	DECEMBER, 2006	01–12
H24–09–06	DECEMBER, 2006	07–15
H24–10–06	DECEMBER, 2006	12–10
H24–36–06	DECEMBER, 2006	12–10
H24–37–06	DECEMBER, 2006	01–10
H24–38–06	DECEMBER, 2006	01–10
H24–39–06	DECEMBER, 2006	07–10
H24–40–06	DECEMBER, 2006	12–10
H24–41–06	DECEMBER, 2006	09–12
H24–50–06	DECEMBER, 2006	10–16
H24–52–06	DECEMBER, 2006	09–16
H24–83–06	DECEMBER, 2006	09–16

ESTIMATE REFERENCE INFORMATION

100–4A
10–29–02

Item No.	Item Code	Description
1	2101–0850001	CLEARING AND GRUBBING REFER TO TAB. 110–17.
2	2102–2625000	EMBANKMENT–IN–PLACE REFER TO TAB. 107–29. MATERIAL IS TO BE PROVIDED BY THE CONTRACTOR.
3	2102–2710070	EXCAVATION, CLASS 10, ROADWAY AND BORROW REFER TO TAB. 107–29. TYPE "A" COMPACTION WILL BE REQUIRED. BORROW MAY BE OBTAINED FROM SUITABLE CLASS 20, CLASS 21 AND CLASS 10 CHANNEL EXCAVATIONS. NO PAYMENT FOR OVERHAUL WILL BE ALLOWED. EXISTING SLOPES THAT ARE TO RECEIVE EMBANKMENT, REGARDLESS OF THEIR HEIGHT, SHALL BE PREPARED IN ACCORDANCE WITH ARTICLE 2107.03, C, 2, OF THE STANDARD SPECIFICATIONS. PAYMENT FOR THIS ITEM WILL BE AT PLAN QUANTITY. CROSS SECTIONS WILL NOT BE TAKEN AFTER EXCAVATION FOR THE PURPOSE OF DETERMINING ACTUAL QUANTITIES.
4	2104–2710020	EXCAVATION, CLASS 10, CHANNEL REFER TO TAB. 107–29. EXCESS MATERIAL AND UNSUITABLE MATERIAL NOT DESIRABLE TO BE INCORPORATED INTO THE WORK INVOLVED ON THIS PROJECT SHALL BECOME THE PROPERTY OF THE CONTRACTOR AND SHALL BE HAULED FROM THE SITE. THE COST OF HAULING AND DISPOSING OF THIS MATERIAL SHALL BE INCLUDED IN AND CONSIDERED INCIDENTAL TO THE PRICE BID FOR CLASS 10 CHANNEL EXCAVATION. NO PAYMENT FOR OVERHAUL WILL BE ALLOWED. QUANTITY INCLUDES EXCAVATION REQUIRED TO INSTALL REVETMENT. QUANTITY INCLUDES EXCAVATION REQUIRED TO TRANSITION PROPOSED CHANNEL SLOPES INTO EXISTING SLOPES WITHIN THE LIMITS SHOWN ON PLAN SHEET V1. EXISTING SLOPES THAT ARE TO RECEIVE EMBANKMENT, REGARDLESS OF THEIR HEIGHT, SHALL BE PREPARED IN ACCORDANCE WITH ARTICLE 2107.03, C, 2, OF THE STANDARD SPECIFICATIONS. PAYMENT FOR THIS ITEM WILL BE AT PLAN QUANTITY. CROSS SECTIONS WILL NOT BE TAKEN AFTER EXCAVATION FOR THE PURPOSE OF DETERMINING ACTUAL QUANTITIES.
5	2105–8425015	TOPSOIL, STRIP, SALVAGE AND SPREAD STRIPPING SHALL BE 6 INCH DEPTH. PLACEMENT DEPTH SHALL BE NO LESS THAN 4 INCHES. QUANTITY CONSIDERS A SHRINKAGE FACTOR OF 40%. EXTRA MATERIAL SHALL BE WASTED ON FORESLOPES.
6	2312–8260201	GRANULAR SURFACING ON ROAD, CLASS C GRAVEL MATERIAL SHALL BE SPREAD BY THE CONTRACTOR AND THE CONTRACT UNIT PRICE PER TON SHALL INCLUDE THE COST OF SPREADING GRANULAR SURFACING ON ROADWAY SURFACE. RATE OF APPLICATION SHALL BE 2520 TONS PER MILE.
8	2402–2720000	EXCAVATION, CLASS 20
9	2402–2721000	EXCAVATION, CLASS 21 REFER TO DETAILS ON PLAN SHEET U1.
10	2403–0100010	STRUCTURAL CONCRETE (BRIDGE) REFER TO TABULATION ON PLAN SHEET C3. WING ARMORING WILL NOT BE UTILIZED AT THIS STRUCTURE. ITEM INCLUDES CERTIFIED PLANT INSPECTION IN ACCORDANCE WITH SECTION 2521 OF THE STANDARD SPECIFICATIONS. AT WEST END OF BRIDGE, DO NOT CONSTRUCT BARRIER RAIL END SECTIONS, END SECTION FOOTINGS, ABUTMENT DIAPHRAGM EXTENSION SECTIONS, AND 2X8 BEVELED KEYWAYS FOR CONNECTION OF END SECTION FOOTINGS TO ABUTMENT DIAPHRAGM WING EXTENSIONS AND ABUTMENT EXTENSIONS. NO CONSTRUCTION EQUIPMENT HAVING AN AXLE LOAD GREATER THAN 20,000 POUNDS OR A GROSS VEHICLE WEIGHT GREATER THAN 80,000 POUNDS SHALL BE OPERATED ON THE NEWLY CONSTRUCTED BRIDGE UNLESS LOADED ON A LEGAL TRAILER.
11	2404–7775000	REINFORCING STEEL REFER TO TABULATION ON PLAN SHEET C3.
12	2407–0551363	BEAMS, PRETENSIONED PRESTRESSED CONCRETE, C63
13	2407–0551371	BEAMS, PRETENSIONED PRESTRESSED CONCRETE, C71 VENT HOLES SHALL BE CAST IN EVERY BEAM. REFER TO VENT HOLE DETAIL ON PLAN SHEET U2.
14	2408–7800000	STRUCTURAL STEEL REFER TO TABULATION ON PLAN SHEET C3.
15	2414–6424124	CONCRETE OPEN RAILING, TL–4 REFER TO DETAILS ON PLAN SHEET U3.
16	2417–1040030	CULVERT, CORRUGATED METAL ENTRANCE PIPE, 30 IN. DIA. REFER TO TAB. 102–3. ALL CORRUGATED METAL PIPE LARGER THAN 12 INCHES IN DIAMETER SHALL BE ANNULAR, RIVETED PIPE. "SPIRAL" PIPE WILL NOT BE ALLOWED FOR PIPE DIAMETERS LARGER THAN 12 INCHES. MINIMUM BAND WIDTH SHALL BE 24 INCHES.
17	2501–0201057	PILES, STEEL, HP 10 X 57 WAVE EQUATION ANALYSIS WILL BE USED AT THE TIME OF PILE DRIVING TO DETERMINE PILE BEARING. THE CONTRACTOR SHALL SUBMIT ADEQUATE HAMMER INFORMATION SO THAT THE PROPER ANALYSIS CAN BE PERFORMED. REFER TO PLAN SHEET U4.

ESTIMATE REFERENCE INFORMATION

100–4A
10–29–02

Item No.	Item Code	Description
19	2507–3250005	ENGINEERING FABRIC MATERIAL SHALL BE AS SPECIFIED FOR EMBANKMENT EROSION CONTROL IN ACCORDANCE WITH ARTICLE 4196.01, B, 3, OF THE STANDARD SPECIFICATIONS. MATERIAL SHALL BE JOINED BY OVERLAPPING A MINIMUM OF 18 INCHES. REFER TO DETAILS ON PLAN SHEET U1. THE QUANTITY OF ENGINEERING FABRIC FOR WHICH PAYMENT WILL BE MADE, WHEN PLACED AS SHOWN IN THE CONTRACT DOCUMENTS, WILL BE THE QUANTITY SHOWN IN THE CONTRACT DOCUMENTS IN SQUARE YARDS. MATERIAL USED FOR LAP JOINTS IS INCIDENTAL.
20	2507–6800021	REVETMENT, CLASS B REFER TO DETAILS ON PLAN SHEET U1. IF BROKEN CONCRETE IS USED, INDIVIDUAL PIECES SHALL NOT EXCEED 3 FEET IN ANY DIMENSION. DEWATERING REQUIRED TO INSTALL REVETMENT SHALL BE INCLUDED IN AND CONSIDERED INCIDENTAL TO THE PRICE BID FOR THIS ITEM. THE CONTRACTOR WILL BE RESPONSIBLE FOR REMOVAL OF ALL REMNANTS OF REVETMENT STOCKPILES FROM FARM FIELDS UTILIZED BY CONTRACTOR IN THE PROJECT AREA. THIS WORK WILL BE INCLUDED IN AND CONSIDERED INCIDENTAL TO THE PRICE BID FOR THIS ITEM.
21	2507–6875002	REVETMENT, REMOVE AND REPLACE ITEM INCLUDES REMOVING ALL EXISTING REVETMENT WITHIN THE LIMITS OF THE PROPOSED REVETMENT. QUANTITY IS BASED ON AN ESTIMATED THICKNESS OF 1 FOOT. STOCKPILE MATERIAL FOR USE ON THIS PROJECT. REMOVAL AND DISPOSAL OF EXISTING ENGINEERING FABRIC, IF PRESENT, SHALL BE CONSIDERED INCIDENTAL TO THIS ITEM. PLACE MATERIAL ON WEST CHANNEL BANK UPSTREAM OF PROPOSED REVETMENT TO PROVIDE SMOOTH TRANSITION TO PROPOSED BRIDGE OPENING. THE QUANTITY OF REVETMENT, REMOVE AND REPLACE FOR WHICH PAYMENT WILL BE MADE, WHEN PLACED AS SHOWN IN THE CONTRACT DOCUMENTS, WILL BE THE QUANTITY SHOWN IN THE CONTRACT DOCUMENTS IN CUBIC YARDS. FOR REVETMENT, REMOVE AND REPLACE THE CONTRACTOR WILL BE PAID THE CONTRACT UNIT PRICE PER CUBIC YARD. THIS PAYMENT SHALL BE FULL COMPENSATION FOR FURNISHING ALL MATERIAL, EQUIPMENT AND LABOR AND FOR PERFORMANCE OF ALL WORK NECESSARY FOR REMOVING AND STOCKPILING THE EXISTING REVETMENT AND REPLACEMENT OF THE REVETMENT.
22	2518–6910000	SAFETY CLOSURE REFER TO TAB. 108–13A.
23	2524–9100030	OBJECT MARKER, TYPE 3 INSTALL ONE MARKER AT THE END OF EACH ROUNDED END POST OR, IF NO ROUNDED END POST IS PRESENT, AT THE END OF THE CONCRETE OPEN RAIL. INSIDE EDGE OF THE MARKER SHALL BE IN LINE WITH THE INNER EDGE OF THE END POST OR CONCRETE OPEN RAIL. THE ENGINEER WILL COUNT EACH OBJECT MARKER INSTALLED. PAYMENT WILL BE THE CONTRACT UNIT PRICE FOR EACH OBJECT MARKER COUNTED. PAYMENT IS FULL COMPENSATION FOR FURNISHING, FABRICATING AND ERECTING THE OBJECT MARKERS COMPLETE, INCLUDING POSTS AND MARKER SIGNS, FURNISHING ALL NECESSARY FITTINGS AND ATTACHMENTS, AND ALL LABOR NECESSARY TO COMPLETE THE WORK.
28	2601–2636015	NATIVE GRASS SEEDING SEED ALL AREAS OF DISTURBED CHANNEL BANKS THAT DO NOT RECEIVE REVETMENT.
29	2601–2636043	SEEDING AND FERTILIZING (RURAL) SEED AND FERTILIZE ALL DISTURBED AREAS OUTSIDE THE CHANNEL THAT DO NOT RECEIVE GRANULAR SURFACING.
30	2602–0000020	SILT FENCE REFER TO TAB. 100–17. THE TABULATION INCLUDES ESTIMATED LOCATIONS FOR PLACEMENT OF SILT FENCE TO ADDRESS POSSIBLE EROSION DURING CONSTRUCTION. VERIFY THE SPECIFIC LOCATIONS WITH THE ENGINEER PRIOR TO BEGINNING PLACEMENT. BID ITEM INCLUDES 25% ADDITIONAL QUANTITY FOR FIELD ADJUSTMENT AND REPLACEMENTS.
31	2602–0000030	SILT FENCE FOR DITCH CHECKS REFER TO TAB. "CHECKS." THE TABULATION INCLUDES ESTIMATED LOCATIONS FOR PLACEMENT OF "SILT FENCE FOR DITCH CHECKS" TO ADDRESS EROSION TO BE ENCOUNTERED DURING CONSTRUCTION. VERIFY THE SPECIFIC LOCATIONS WITH THE ENGINEER PRIOR TO BEGINNING PLACEMENT. BID ITEM INCLUDES 50% ADDITIONAL QUANTITY FOR FIELD ADJUSTMENTS AND REPLACEMENTS.

GENERAL NOTES

IT SHALL BE THE CONTRACTOR'S RESPONSIBILITY TO MAKE ALL NECESSARY ARRANGEMENTS WITH ADJACENT PROPERTY OCCUPANTS FOR RESTRAINING LIVESTOCK FROM ENTERING THE RIGHT–OF–WAY DURING CONSTRUCTION.

CONTRACTOR IS TO USE DUE CAUTION IN WORKING OVER AND AROUND ALL TILE LINES. BREAKS IN THE TILE LINE DUE TO THE CONTRACTOR'S CARELESSNESS ARE TO BE REPLACED AT CONTRACTOR'S EXPENSE WITHOUT COST TO THE CONTRACTING AUTHORITY. ANY TILE LINES BROKEN OR DISTURBED BY CUT LINES WILL BE REPLACED AS DIRECTED BY THE ENGINEER IN CHARGE OF CONSTRUCTION AND AT THE CONTRACTING AUTHORITY'S EXPENSE.

TEMPORARY TRAFFIC CONTROL DEVICES FOR THE DETOUR ROUTE WILL BE PROVIDED, INSTALLED, AND MAINTAINED BY THE CONTRACTING AUTHORITY.

ALL BORROW AREAS, STOCKPILE AREAS, HAUL ROADS, AND AREAS USED FOR EQUIPMENT ON THIS PROJECT REQUIRE SUBSOIL TILLAGE TO AN AVERAGE DEPTH OF 16 TO 20 INCHES PRIOR TO PLACEMENT OF TOPSOIL AND/OR STABILIZING CROP SEEDING. COMPLETE THIS TILLAGE AT 3 FOOT MAXIMUM CENTERS AND AT RIGHT ANGLES TO THE FINISHED SLOPE.

USE TILLAGE EQUIPMENT EQUIPPED WITH AN ARROWHEAD TYPE SHOE THAT WILL PROVIDE LATERAL DISPLACEMENT AND LIMIT THE MOVEMENT OF THE SUBSOIL TO THE SURFACE. OBTAIN THE ENGINEER'S APPROVAL FOR THE EQUIPMENT. THIS WORK IS INCIDENTAL TO OTHER WORK ON THE PROJECT.

FOLLOWING THE SUBSOIL TILLAGE, THE AREA IS TO REMAIN IN A "LOOSENED" CONDITION. ADDITIONAL COMPACTION OR THE OPERATION OF HEAVY EQUIPMENT, OTHER THAN REQUIRED FOR TOPSOIL PLACEMENT AND SHAPING, WILL NOT BE ALLOWED ON AREAS WHICH HAVE BEEN RECEIVED SUBSOIL TILLAGE.

A THOROUGH ASBESTOS INSPECTION OF THE EXISTING BRIDGE HAS BEEN PERFORMED. NO ASBESTOS WAS FOUND.

04–18–17 232–10

ANY LIVING, DEAD, CUT OR FALLEN MATERIAL OF THE ASH (FRAXINUS SPP.) INCLUDING TREES, NURSERY STOCK, LOGS, FIREWOOD, STUMPS, ROOTS, BRANCHES, AND COMPOSTED OR UNCOMPOSTED ASH CHIPS CAN BE FREELY MOVED WITHIN THE YELLOW AREAS OF THE MOST RECENT FEDERAL EAB QUARANTINE & AUTHORIZED TRANSIT.

http://www.aphis.usda.gov/plant_health/plant_pest_pest_info/emeraldash_b/downloads/eab_quarantine_map.pdf.

OBTAIN APPROPRIATE COMPLIANCE AGREEMENTS FROM USDA APHIS PPQ PRIOR TO MOVING ANY OF THE ABOVE LISTED ASH ARTICLES TO AREAS OUTSIDE THE YELLOW ZONE ON THE MAP.

FOR QUESTIONS, CONCERNS, AND GENERAL ASSISTANCE, CONTACT:

USDA APHIS PPQ, IOWA OFFICE, 515–414–3295

OR

IOWA DEPARTMENT OF AGRICULTURE & LAND STEWARDSHIP
515–725–1470
Entomology@IowaAgriculture.gov

09–27–94 271–9

A SCRAPE SAMPLE WAS TAKEN FROM ONE AREA OF THIS BRIDGE TO GET AN INDICATION OF THE EXISTENCE OF THE LEVEL OF TOTAL CHROMIUM AND TOTAL LEAD. ANALYSIS OF TOTAL LEAD ON THIS SAMPLE WAS 2,120 PARTS PER MILLION (PPM). ANALYSIS OF TOTAL CHROMIUM ON THIS SAMPLE WAS 20,300 PPM. THESE ANALYSES SHOW THE EXISTENCE OF THESE TWO TOXIC CONSTITUENTS. LEVELS INDICATED BY THESE TESTS COULD CREATE CONDITIONS ABOVE REGULATORY LIMITS FOR HEALTH AND SAFETY REQUIREMENTS. NO OTHER CONSTITUENTS WERE ANALYZED. THE BIDDER SHOULD NOT RELY ON THE CONTRACTING AUTHORITY'S TESTING AND ANALYSIS FOR ANY PURPOSE OTHER THAN AS AN INDICATION OF THE EXISTENCE OF THESE TWO TOXIC CONSTITUENTS.

PLACEMENT OF QUANTITIES
201'–4 x 24' PPCB BRIDGE

Item	Unit	Piers	Superstructure & Abutments	Total
STRUCTURAL CONCRETE (BRIDGE)	CY	174.8	228.0	402.8
REINFORCING STEEL	LB	21038	59767	80805
STRUCTURAL STEEL	LB	–	3234	3234

TABULATION OF SILT FENCES

100–17
04–20–10

Refer to EC–201

Location			Length	Remarks
Begin Station	End Station	Side	LF	
26+97	27+35	R	88	
26+97	27+35	L	82	
30+00	36+00	R	745	
SUBTOTAL			915.0	
+25% FOR REPLACEMENTS			228.8	
TOTAL			1143.8	

TABULATION OF SILT FENCES FOR DITCH CHECKS

100–18
MODIFIED

Possible Standard: EC–201

Type	Location		Length	Remarks
	Station	Side	LF	
1	30+00	L	20	
1	33+00	L	20	
	TOTAL		40	TABULATED QUANTITY
	TOTAL +50%		60	BID QUANTITY

ACCESS POINTS AND SAFETY RAMPS

102–3
MODIFIED

Refer to Cross–Sections

Length of unclassified pipe calculated is based on using Reinforced Concrete Pipe.

(1) Refer to MI–210
(2) Refer to EW–501.
(3) Refer to EW–501 OR EW–502.
* Predetermined for access point not constructed with this project.

Location		Type		(1)(2)	(2)	Pipe Culvert (3)					Driveway Surfacing Material	Remarks
Station	Side	A, B, C, Safety Ramp, or Predetermined*	(W)	(PR)	(SR)	(H)	Size	Pipe Length	Lt.	Rt.		
			FT	FT	FT	FT	IN	LF	LF	LF	TON	
30+65	L	C	20			2.5	30	42	21.6	20.4		

SAFETY CLOSURES

108–13A
08–01–08

Refer to Section 2518 of the Standard Specifications

Station	Closure Type		Remarks
	Road Qty.	Hazard Qty.	
27+00		1	WEST END
36+50		1	EAST END
TOTAL		2	

TABULATION OF TEMPLATE QUANTITIES AND ADJUSTMENTS

107–29
04–15–14

Refer to EW–101 and EW–102

STATION	CUT			FILL				TOPSOIL			
	[1]	[2]	[3]	[4]	[5]	[6]	[7]	[8]	[9]	[10]	[11]
			[1]–[2]		[4]*1.35		[3]–[5]–[6]			[9]*1.4	[8]–[10]
	TOTAL CUT	TOPSOIL SAVED –C	CLASS 10 SUITABLE CUT	TOTAL FILL	TOTAL FILL ADJUSTED WITH 35% SWELL	ADD QUANTITY +F	TOTAL CUT MINUS FILL WITH 35% SWELL	TOPSOIL STRIP AND STOCKPILE CUT	TOPSOIL FILL	TOPSOIL FILL WITH 40% SWELL	TOPSOIL CUT MINUS TOPSOIL FILL WITH SWELL
26+97.06	39	39	0	383	517		–517	39	26	36	3
27+35.33											
29+36.67	526	194	332	1050	1418		–1086	194	130	182	12
30+00	1235	385	850	1230	1661	155 ENT	–966	385	257	360	25
31+00	736	252	484	903	1219		–735	252	168	235	17
32+00	362	148	214	398	537		–323	148	99	139	9
33+00	213	118	95	150	203		–108	118	79	111	7
34+00	191	122	69	119	161		–92	122	81	113	9
35+00	88	59	29	52	70		–41	59	40	56	3
36+00											
	3390	1317	2073	4285	5786	155	–3868	1317	880	1232	85

CLEARING AND GRUBBING

110–17
MODIFIED

Location		Work and Material Type	All other Materials		Estimated Quantities			Remarks
Station to Station or Ref. Loc. Sign to Ref. Loc. Sign or Description	Direction of Travel		Length	Width	Units	Area	Herbicide Application	
			FT	FT	Units	Acres	Each	
27+35 – 27+93	E	TREES – CLEAR AND GRUB				0.1		WEST SIDE OF CHANNEL
28+88 – 30+33	E	TREES – CLEAR AND GRUB				0.5		EAST SIDE OF CHANNEL
				TOTAL		0.6		

PARCEL NUMBER	PROPERTY OWNER
1	GARY D. POHLMAN, JUDY J. POHLMAN
2	RICK L. MOORE, BRADLEY D. MOORE, MICHELLE R. MOORE
3	DONALD MARTZ

⊕S-1 SOIL BORING

LIMITS OF CLEARING & GRUBBING

SOLDIER TWP.
T-83N R-42W

PI STA. 32+45.78
Δ = 33°12'53"
D = 12°54'16"
T = 132.42'
L = 257.39'
E = 19.33'
R = 444.00'
e = 8%
l = 165'
x = 41'
d.s.=40 mph

STA. 30+65, 76' RT.
F. ENT.
30"x30' CMP
CONTRACTOR TO REMOVE
EXISTING STRUCTURE AND
FURNISH AND PLACE @
STA. 30+65 LT.
30"x42' CMP
20' TOP
W/2:1 F.S.

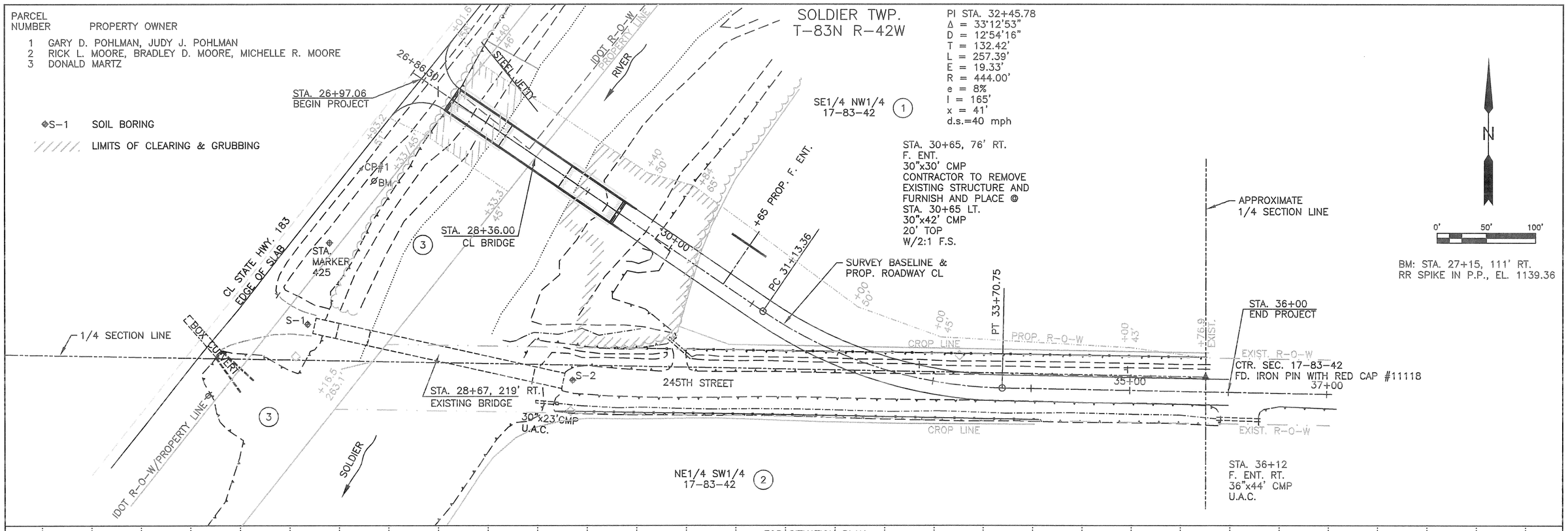

BM: STA. 27+15, 111' RT.
RR SPIKE IN P.P., EL. 1139.36

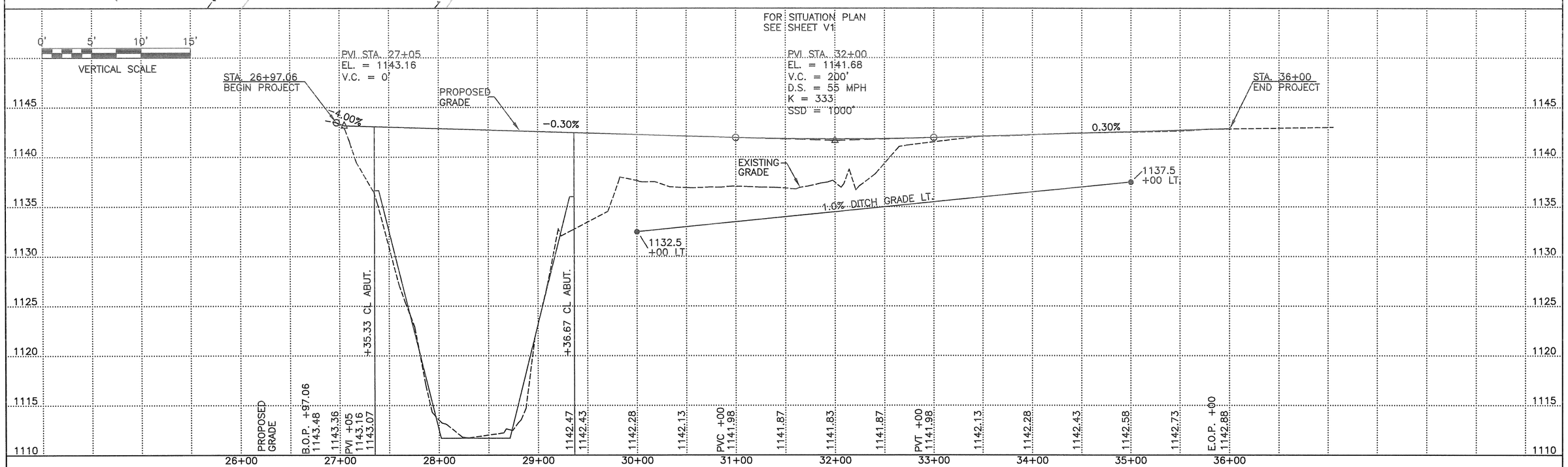

REV:

SUNDQUIST ENGINEERING, P.C. | 910 7TH STREET, ONAWA, IA 51040 P712 423 3131 F712 433 3134 SUNDQUISTENGINEERING.COM

SE PROJECT NO. 12219 DATE: 06/19 DRAWN BY: TKK REVIEWED BY: TJG APPROVED BY: PEM

MONONA COUNTY PROJECT NO. BROS-SWAP-C067(87)--SE-67

SHEET D1

GENERAL INFORMATION
THIS SURVEY IS IN ENGLISH UNITS.

BENCH MARKS	ELEVATION
STA. 27+15, 111' RT. RR SPIKE IN P.P.	1139.36

N

UNLESS NOTED:
ALL TIES ARE HORIZONTAL DISTANCES

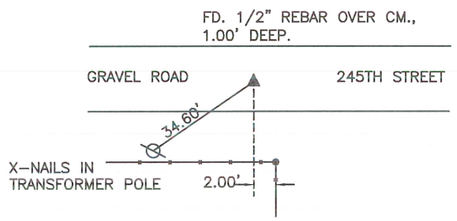

E1/4 CORNER SEC. 18-83-42
Y=3471741.71 X=4304585.95

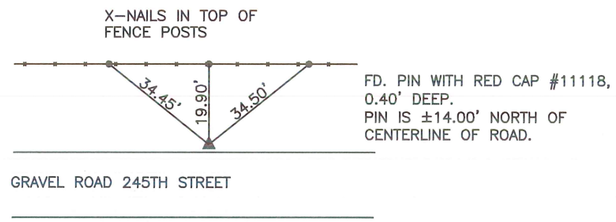

CENTER SEC. 17-83-42
Y=3471692.74 X=4307213.43

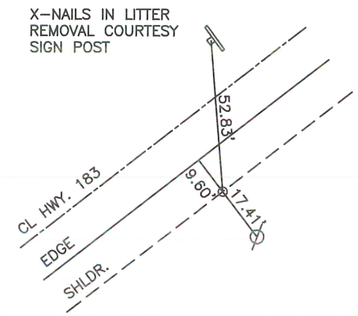

CONTROL POINT #1
Y=3471902.00 X=4306360.40

ALIGNMENT COORDINATES

101-16
10-20-09

Name	Location	Point on Tangent			Begin Spiral			Begin Curve			Simple Curve PI or Master PI of SCS			End Curve			End Spiral		
		Station	Coordinates		Station	Coordinates		Station	Coordinates		Station	Coordinates		Station	Coordinates		Station	Coordinates	
			Y (Northing)	X (Easting)		Y (Northing)	X (Easting)		Y (Northing)	X (Easting)		Y (Northing)	X (Easting)		Y (Northing)	X (Easting)		Y (Northing)	X (Easting)
245TH ST.		26+86.30	3471999.19	4306412.37				31+13.36	3471758.64	4306765.24	32+45.78	3471684.05	4306874.66	33+70.75	3471681.58	4307007.06			
		36+00.00	3471677.31	4307236.27															

DETAILS OF REFERENCE INFORMATION

All References Plumb Distances
(unless otherwise noted)

POLLUTION PREVENTION PLAN

110–12L
10–16–18

This project is regulated by the requirements of the Iowa Department of Natural Resources (DNR) National Pollutant Discharge Elimination System (NPDES) General Permit No. 2 OR an Iowa Department of Natural Resources (DNR) National Pollutant Discharge Elimination System (NPDES) individual storm water permit. The Contractor shall carry out the terms and conditions of this permit and the Pollution Prevention Plan (PPP).

This Base PPP includes information on Roles and Responsibilities, Project Site Description, Controls, Maintenance Procedures, Inspection Requirements, Non–Storm Water Controls, Potential Sources of Off Right–of–Way Pollution, and Definitions. This plan references other documents rather than repeating the information contained in the documents. A copy of this Base Pollution Prevention Plan, amended as needed per plan revisions or by contract modification, will be readily available for review.

All contractors shall conduct their operations in a manner that controls pollutants, minimizes erosion, and prevents sediments from entering waters of the state and leaving the highway right–of–way. The prime contractor shall be responsible for compliance and implementation of the PPP for their entire contract. This responsibility shall be further shared with subcontractors whose work is a source of potential pollution as defined in this PPP.

I. ROLES AND RESPONSIBILITIES

A. Designer:
1. Prepares Base PPP included in the project plan.
2. Prepares Notice of Intent (NOI) submitted to Iowa DNR.
3. Is signature authority on the Base PPP.

B. Contractor:
1. Signs a co–permittee certification statement adhering to the requirements of the NPDES permit and this PPP. All co–permittees are legally required under the Clean Water Act and the Iowa Administrative Code to ensure compliance with the terms and conditions of this PPP.
2. Designates a Water Pollution Control Manager (WPCM), who has the duties and responsibilities as defined in Section 2602 of the Standard Specifications.
3. Submits an Erosion Control Implementation Plan (ECIP) and ECIP updates according to Section 2602 of the Standard Specifications.
4. Installs and maintains appropriate controls. This work may be subcontracted.
5. Supervises and implements good housekeeping practices.
6. Conducts joint required inspections of the site with inspection staff. When Contractor is not mobilized on site, Contractor may delegate this responsibility to a trained or certified subcontractor. Contracting Authority also may waive joint inspection requirement during winter shutdown. In both circumstances, WPCM (or trained or certified delegate from the Contractor) is still responsible to review and sign inspection reports.

Complies with training and certification requirements of Section 2602 of the Standard Specifications.

C. Subcontractors:
1. Sign a co–permittee certification statement adhering to the requirements of the NPDES permit and this PPP if responsible for sediment or erosion controls or involved in land disturbing activities. All co–permittees are legally required under the Clean Water Act and the Iowa Administrative Code to ensure compliance with the terms and conditions of this PPP.
2. Implement good housekeeping practices.

D. RCE/Project Engineer:
1. Is Project Storm Water Manager.
2. Takes actions necessary to ensure compliance with storm water requirements including, where appropriate, issuing stop work orders, and directing additional inspections at construction project sites that are experiencing problems with achieving permit compliance.
3. Orders the taking of measures to cease, correct, prevent, or minimize the consequences of non–compliance with the storm water requirements of the Applicable Permit.
4. Supervises all work necessary to meet storm water requirements at the Project, including work performed by contractors and subcontractors.
5. Requires employees, contractors, and subcontractors to take appropriate responsive action to comply with storm water requirements, including requiring any such person to cease or correct a violation of storm water requirements, and to order or recommend such other actions as necessary to meet storm water requirements.
6. Is familiar with the Project PPP and storm water site map.
7. Is the point of contact for the Project for regulatory officials, Inspector, contractors, and subcontractors regarding storm water requirements.
8. Is signature authority on Notice of Discontinuation.

E. Inspector:
1. Updates PPP whenever there is a change in design, construction, operation, or maintenance which has a significant effect on the discharge of pollutants from the project.
2. Maintains an up–to–date record that identifies contractors and subcontractors as co–permittees.
3. Makes these plans available to the DNR upon their request.
4. Conducts joint required inspections of the site with the contractor/subcontractor.
5. Completes an inspection report after each inspection.
6. Is signature authority on storm water inspection reports.

II. PROJECT SITE DESCRIPTION

A. This Pollution Prevention Plan (PPP) is for the construction of a Monona County Bridge on county road 245th St. over Soldier River.

B. This PPP covers approximately 3.2 acres with an estimated 1.9 acres being disturbed. The portion of the PPP covered by this contract has 1.9 acres disturbed.

C. The PPP is located in an area of one soil association (Monona–Ida–Napier). The estimated weighted average runoff coefficient number for this PPP after completion will be 0.24.

D. Storm Water Site Map – Multiple sources of information comprise the base storm water site map including:
1. Drainage patterns – Plan and Profile sheets and Situation plans.
2. Proposed Slopes – Cross Sections.
3. Areas of Soil Disturbance – Construction limits shown on Plan and Profile sheets.
4. Location of Structural Controls – Tabulations on C sheets.
5. Locations of Non–structural Controls – Tabulations on C sheets.
6. Locations of Stabilization Practices – Generally within construction limits shown on Plan and Profile sheets.
7. Surface Waters (including wetlands) – Project Location Map and Plan and Profile sheets.
8. Locations where Storm Water is Discharged – Plan and Profile sheets.

E. The base storm water site map is amended by contract modifications and progress payments (fieldbook entries) of completed erosion control work. Also, due to project phasing, erosion and sediment controls shown on project plans may not be installed until needed, based on site conditions. For example, silt fence ditch checks will typically not be installed until the ditch has been installed. Installed locations may also be modified from tabulation locations by field staff. Installed locations will be documented by fieldbook entries.

F. Runoff from this work will flow into Soldier River.

POLLUTION PREVENTION PLAN

110–12L
10–16–18

III. CONTROLS

A. The Contractor's ECIP specified in Article 2602.03 of the Standard Specifications for accomplishment of storm water controls should clearly describe the intended sequence of major activities, and for each activity define the control measure and the timing during the construction process that the measure will be implemented.

B. Preserve vegetation in areas not needed for construction.

C. Sections 2601 and 2602 of the Standard Specifications define requirements to implement erosion and sediment control measures. Actual quantities used and installed locations may vary from the Base PPP and amendment of the plan will be documented via fieldbook entries or by contract modification. Additional erosion and sediment control items may be required as determined by the inspector and/or contractor during storm water monitoring inspections. If the work involved is not applicable to any contract tems, the work will be paid for according to Article 1109.03 paragraph B of the Standard Specifications.

1. EROSION AND SEDIMENT CONTROLS

a. Stabilization Practices
1) Site plans will ensure that existing vegetation or natural buffers are preserved where attainable and disturbed portions of the site will be stabilized.
2) Initialize stabilization of disturbed areas immediately after clearing, grading, excavating, or other earth disturbing activities have:
a) Permanently ceased on any portion of the site, or
b) Temporarily ceased on any portion of the site and will not resume for a period exceeding 14 calendar days.
3) Staged permanent and/or temporary stabilizing seeding and mulching shall be completed as the disturbed areas are completed. Incomplete areas shall be stabilized according to paragraph III, C, 1, a, 2, b above.
4) Permanent and Temporary Stabilization practices to be used for this project are located in the Estimated Project Quantities (100–0A, 100–1A, or 100–1C) and Estimate Reference Information (100–4A) located in the C sheets. Typical drawings detailing construction of the practices to be used on this project are referenced in the Standard Road Plans Tabulation (105–4) in the C sheets.
5) Preservation of existing vegetation within right–of–way or easements will act as vegetative buffer strips.
6) Preservation of topsoil: Bid items to be used for this project are located in the Estimated Project Quantities (100–0A, 100–1A, or 100–1C) and Estimate Reference Information (100–4A) located in the C sheets. Additional information may be found in Tabulations in the C or T sheets or is referenced in Section 2105 of Standard Specifications.

b. Structural Practices
1) Structural practices will be implemented to divert flows from exposed soils and detain or otherwise limit runoff and the discharge of pollutants from exposed areas of the site. Additionally, structural practices may include: silt basins that provide 3600 cubic feet of storage per acre drained or equivalent sediment controls, outlet structures that withdraw water from surface when discharging basins, and controls to direct storm water to vegetated areas.
2) Structural practices to be used for this project are located in the Estimated Project Quantities (100–0A, 100–1A, or 100–1C) and Estimate Reference Information (100–4A) located in the C sheets, as well as all other item specific Tabulations. Typical drawings detailing construction of the devices to be used on this project can be found in the B sheets or are referenced in the Standard Road Plans Tabulation (105–4) located in the C sheets.

c. Storm Water Management
1) Measures shall be installed during the construction process to control pollutants in storm water discharges that will occur after construction operations have been completed. This may include velocity dissipation devices at discharge locations and along length of outfall channel as necessary to provide a non–erosion velocity flow from structure to water course. If included with this project, these items are located in the Estimated Project Quantities (100–0A, 100–1A, or 100–1C) and Estimate Reference Information (100–4A) located on the C sheets of the plan, as well as all other item specific Tabulations. Typical drawings detailing construction of the practices to be used on this project are referenced in the Standard Road Plans Tabulation (105–4) in the C sheets. The installation of these devices may be subject to Section 404 of the Clean Water Act.

2. OTHER CONTROLS

a. Contractor disposal of unused construction materials and construction material wastes shall comply with applicable state and local waste disposal, sanitary sewer, or septic system regulations. In the event of a conflict with other governmental laws, rules and regulations, the more restrictive applicable laws, rules or regulations shall apply.
1) Vehicle Entrances and Exits – Construct and maintain entrances and exits to prevent tracking of sediments onto roadways.
2) Material Delivery, Storage and Use – Implement practices to prevent discharge of construction materials during delivery, storage, and use.
3) Stockpile Management – Install controls to reduce or eliminate pollution of storm water from stockpiles of soil and paving.
4) Waste Disposal – Do not discharge any materials, including building materials, into waters of the state, except as authorized by a Section 404 permit.
5) Spill Prevention and Control – Implement chemical spill and leak prevention and response procedures to contain and clean–up spills and prevent material discharges to the storm drain system and waters of the state.
6) Concrete Residuals and Washout Wastes – Waste shall not be discharged to a surface water and is not allowed to adversely affect a water of the state. Designate temporary concrete washout facilities for rinsing out concrete trucks. Provide directions to truck drivers where designated washout facilities are located. Designated washout areas should be located at least 50 feet away from storm drains, streams or other water bodies. Care should be taken to ensure these facilities do not overflow during storm events.
7) Concrete Grooving/Grinding Slurry - Do not discharge slurry to a waterbody or storm drain. Slurry may be applied on foreslopes or removed from the project.
8) Vehicle and Equipment Storage and Maintenance Areas – Perform on site fueling and maintenance in accordance with all environment laws such as proper storage of on site fuels and proper disposal of used engine oil or other fluids on site. Employ washing practices that prevent contamination of surface and ground water from wash water. Wash waters must be treated in a sediment basin or alternative control that provides equivalent or better treatment prior to discharge.
9) Litter Management – Ensure employees properly dispose of litter. Minimize exposure of trash if exposure to precipitation or storm water would result in a discharge of pollutants.
10) Dewatering - Properly treat water to remove suspended sediment before it re–enters a waterbody or discharges off–site. Measures are also to be taken to prevent scour erosion at dewatering discharge point.

3. APPROVED STATE OR LOCAL PLANS

During the course of this construction, it is possible that situations will arise where unknown materials will be encountered. When such situations are encountered, they will be handled according to all federal, state, and local regulations in effect at the time.

IV. MAINTENANCE PROCEDURES

The Contractor is required to maintain all temporary erosion and sediment control measures in proper working order, including cleaning, repairing, or replacing them throughout the contract period. This shall begin when the features have lost 50% of their capacity.

V. INSPECTION REQUIREMENTS

A. Inspections shall be made jointly by the Contractor and the Contracting Authority at least once every seven calendar days. Storm water monitoring inspections will include:
   1. Date of the inspection.
   2. Summary of the scope of the inspection.
   3. Name and qualifications of the personnel making the inspection.
   4. Review of erosion and sediment control measures within disturbed areas for the effectiveness in preventing impacts to receiving waters.
   5. Major observations related to the implementation of the PPP.
   6. Identification of corrective actions required to maintain or modify erosion and sediment control measures.

B. Include storm water monitoring inspection reports in the Amended PPP. Incorporate any additional erosion and sediment control measures determined as a result of the inspection. Immediately begin corrective actions on all deficiencies found within 3 calendar days of the inspection and complete within 7 calendar days following the inspection. If it is determined that making the corrections less than 72 hours after the inspection is impracticable, it should be documented why it is impracticable and indicate an estimated date by which the corrections will be made.

VI. NON–STORM WATER DISCHARGES

This includes subsurface drains (i.e. longitudinal and standard subdrains) and slope drains. The velocity of the discharge from these features may be controlled by the use of headwalls or blocks, Class A stone, erosion stone or other appropriate materials. This also includes uncontaminated groundwater from dewatering operations, which will be controlled as discussed in Section III of the PPP.

VII. POTENTIAL SOURCES OF OFF RIGHT–OF–WAY (ROW) POLLUTION

Silts, sediment, and other forms of pollution may be transported onto highway right–of–way (ROW) as a result of a storm event. Potential sources of pollution located outside highway ROW are beyond the control of this PPP. Pollution within highway ROW will be conveyed and controlled per this PPP.

VIII. DEFINITIONS

A. Base PPP – Initial Pollution Prevention Plan.
B. Amended PPP – May include Plan Revisions or Contract Modifications for new items, storm water monitoring inspection reports, and fieldbook entries made by the inspector.
C. IDR – Inspector's Daily Report – this contains the inspector's daily diary and bid item postings.
D. Controls – Methods, practices, or measures to minimize or prevent erosion, control sedimentation, control storm water, or minimize contaminants from other types of waste or materials. Also called Best Management Practices (BMPs).
E. Signature Authority – Representative authorized to sign various storm water documents.

CERTIFICATION STATEMENT

I certify under penalty of law that this document and all attachments were prepared under my direction or supervision in accordance with a system designed to assure that qualified personnel properly gathered and evaluated the information submitted. Based on my inquiry of the person or persons who manage the system, or those persons directly responsible for gathering the information, the information submitted is, to the best of my knowledge and belief, true, accurate, and complete. I am aware that there are significant penalties for submitting false information, including the possibility of fine and imprisonment for knowing violations.

Signature	Signature
Dustin Wallis	
Printed or Typed Name	Printed or Typed Name

POLLUTION PREVENTION PLAN

110–12L
10–16–18

LOG OF EXPLORATORY BORING

Sheet 1 of 1

Job Number: G5670
Project: L17-2 Bridge Replacement
Date Started: 3/25/19
Date Completed: 3/25/19

Boring No.: S-1
Boring Location: Monona County, IA
Drill Type: Hollow Stem
Ground Elev.: 1141.5

Shelby Tube; Standard Split Spoon; Water Level ATD; Modified California; Grab Sample; Water Level After 24-Hours

Depth in Feet	SOIL DESCRIPTION	USCS	Blow Counts SPT (N) Blows/Foot
	10-Inch Gravel Layer		4-9-14 N= 23
	FIRM SILTY CLAY, Dark Brown, Fill		5-11-11 N= 22
5			
10			3-2-4 N= 6
15	SOFT SILTY CLAY, Yellowish Gray	CL	2-2-2 N= 4
20	(Oxidized)		2-1-2 N= 3
25	(Dark Gray, Sand Lense)		1-2-2 N= 4
30	(Organics)		1-1-2 N= 3
35	GRAVELY SAND, Yellowish Gray	SW	5-15-18 N= 33
40			15-17-18 N= 35
45	FIRM GLACIAL CLAY, Dark Gray	CL	8-6-6 N= 12
50			4-4-6 N= 10
55			3-4-5 N= 9
60			2-5-7 N= 12
65			2-4-6 N= 10
70	FIRM-VERY FIRM GLACIAL CLAY, Dark Gray	CL	2-5-8 N= 13
75			2-5-8 N= 13
80	VERY FIRM GLACIAL CLAY, Dark Gray	CL	32-16-19 N= 35
85			7-15-18 N= 33
90	FIRM-VERY FIRM GLACIAL CLAY, Dark Gray	CL	5-6-7 N= 13
95			4-7-8 N= 15
100			3-6-10 N= 16
105	VERY FIRM GLACIAL CLAY, Dark Gray	CL	5-8-12 N= 20

END OF BORING AT 105 FEET
FREE WATER WAS ENCOUNTERED AT 30 FEET AT TIME OF DRILLING

Columns: Graphic Log; Sample Type; Moisture Content, %; Dry Density (PCF); % Saturation; Hand Penetrometer (TSF); Unconfined Comp. Strength (TSF); Liquid Limit %; Plastic Limit %; Plasticity Index %; Resistivity (Ohm-m)

LOG OF BORING GEOTLOGY CERTIFIED TESTING.GDT 3/26/19

LOG OF EXPLORATORY BORING

Sheet 1 of 1

Job Number: G5670
Project: L17-2 Bridge Replacement
Date Started: 3/26/19
Date Completed: 3/26/19

Boring No.: S-2
Boring Location: Monona County, IA
Drill Type: Hollow Stem
Ground Elev.: 1141.2

Shelby Tube; Standard Split Spoon; Water Level ATD; Modified California; Grab Sample; Water Level After 24-Hours

Depth in Feet	SOIL DESCRIPTION	USCS	Blow Counts SPT (N) Blows/Foot
	8-Inch Gravel Layer		4-4-5 N= 9
	FIRM SILTY CLAY, Dark Brown, Fill		3-5-7 N= 12
5			
10	STIFF SILTY CLAY, Dark Brown	CL	2-3-3 N= 6
15	SOFT SILTY CLAY, Light Brownish Gray	CL	0-1-1 N= 2
20			0-1-2 N= 3
25	(Oxidized)		0-1-2 N= 3
30	(Wood Debris)		0-1-2 N= 3
35	FINE SAND, Medium Gray	SP	2-4-5 N= 9
40	GRAVELY SAND, Brownish Gray	SW	9-11-9 N= 20
45	FIRM GLACIAL CLAY, Dark Gray	CL	4-3-5 N= 8
50			2-4-4 N= 8
55			2-3-4 N= 7
60			2-3-4 N= 7
65			3-4-6 N= 10
70			2-4-5 N= 9
75			4-5-8 N= 13
80	VERY FIRM GLACIAL CLAY, Light Gray	CL	7-10-19 N= 29
85	FIRM-VERY FIRM GLACIAL CLAY, Light Gray	CL	3-5-8 N= 13
90			3-5-7 N= 12
95	VERY FIRM GLACIAL CLAY, Dark Gray	CL	6-7-11 N= 18
100			5-8-11 N= 19
105	(Medium Gray and Gray Brown)		4-9-13 N= 22

END OF BORING AT 106.5 FEET
FREE WATER WAS ENCOUNTERED AT 30 FEET AT TIME OF DRILLING

Columns: Graphic Log; Sample Type; Moisture Content, %; Dry Density (PCF); % Saturation; Hand Penetrometer (TSF); Unconfined Comp. Strength (TSF); Liquid Limit %; Plastic Limit %; Plasticity Index %; Resistivity (Ohm-m)

LOG OF BORING GEOTLOGY CERTIFIED TESTING.GDT 3/26/19

GEOTECHNICAL INFORMATION PROVIDED HEREWITH IS THE SOLE RESPONSIBILITY OF CERTIFIED TESTING SERVICES, INC., WHOSE GEOTECHNICAL REPORT DATED MARCH 28, 2019, COMPLETE WITH THE LICENSED ENGINEER'S SEAL AND CERTIFICATION, IS AVAILABLE FOR VIEWING.

SOUNDING DATA

NOTE: THESE SOUNDINGS WERE MADE FOR DESIGN PURPOSES AND ARE NOT GUARANTEED FOR CONSTRUCTION.

SOUNDINGS WERE TAKEN ON MARCH 25, & 26, 2019.

SEE SHEET D1 FOR BORING LOCATIONS.

LICENSED PROFESSIONAL ENGINEER JED A. MCINERNEY 22686 IOWA

I HEREBY CERTIFY THAT THIS ENGINEERING DOCUMENT WAS PREPARED BY ME OR UNDER MY DIRECT PERSONAL SUPERVISION AND THAT I AM A DULY LICENSED PROFESSIONAL ENGINEER UNDER THE LAWS OF THE STATE OF IOWA.

Jed A. McInerney 7-23-2019
JED A. McINERNEY, P.E. #22686 DATE

MY LICENSE RENEWAL DATE IS DECEMBER 31, 2020.
PAGES OR SHEETS COVERED BY THIS SEAL:
Q1

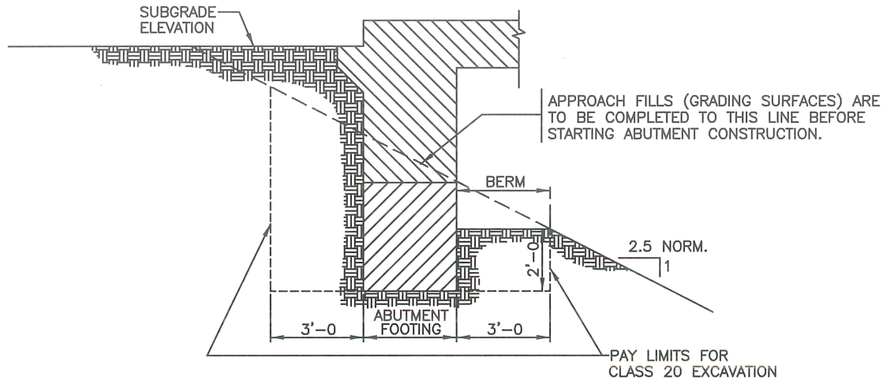

CLASS 20 EXCAVATION DETAIL

NOT TO SCALE

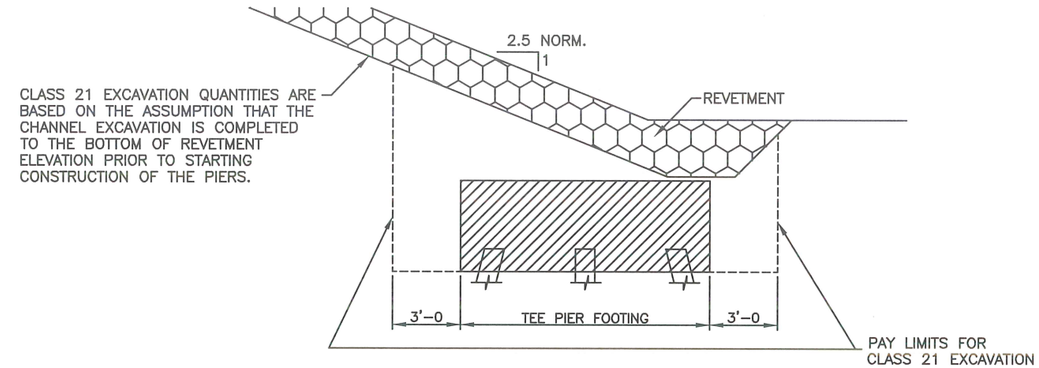

CLASS 21 EXCAVATION DETAIL

NOT TO SCALE

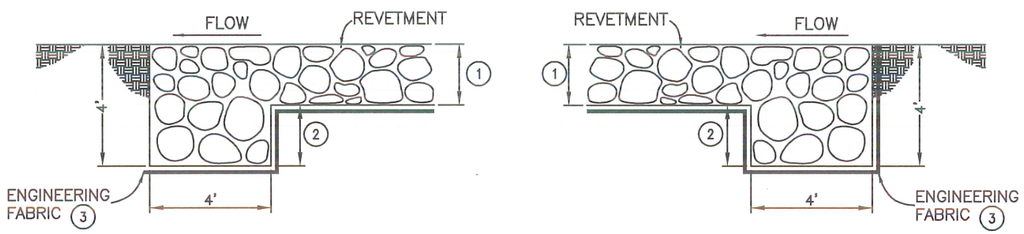

1. 2.5' ACROSS CHANNEL BOTTOM 2.0' ON SIDE SLOPES
2. 1.5' ACROSS CHANNEL BOTTOM 2.0' ON SIDE SLOPES
3. OMIT ENGINEERING FABRIC ACROSS CHANNEL BOTTOM

TYPICAL DOWNSTREAM

TYPICAL UPSTREAM

SECTION B–B

ROCK–FILLED CUTOFF TRENCH DETAILS

CONTINUOUS ACROSS BOTTOM WIDTH AND SIDE SLOPES
NO SCALE

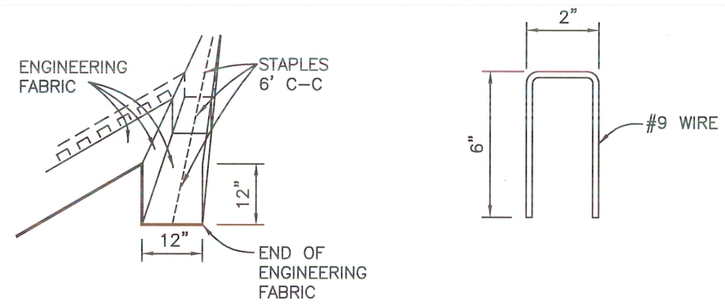

DETAIL OF TRENCH

STAPLE

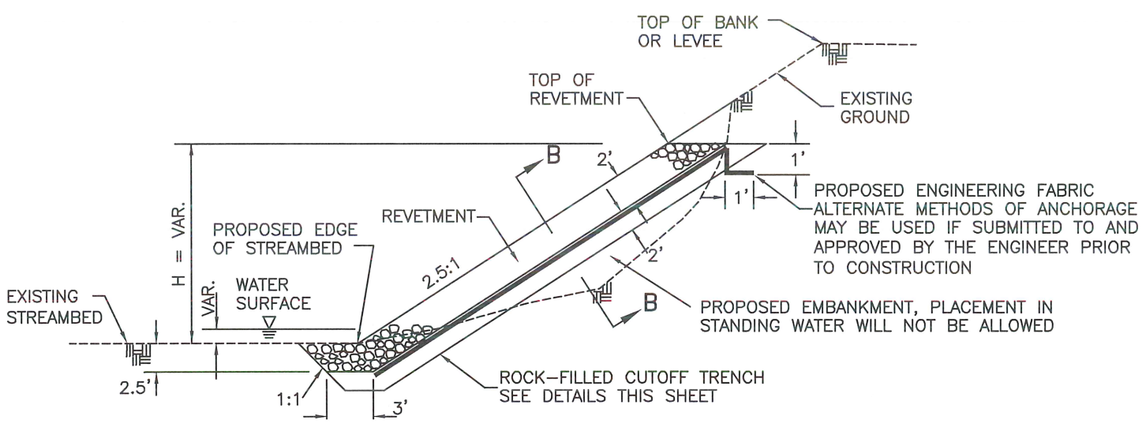

TYPICAL HALF–CHANNEL BANK STABILIZATION SECTION

REFER TO CHANNEL CROSS SECTIONS FOR TOP OF REVETMENT ELEVATIONS
NO SCALE

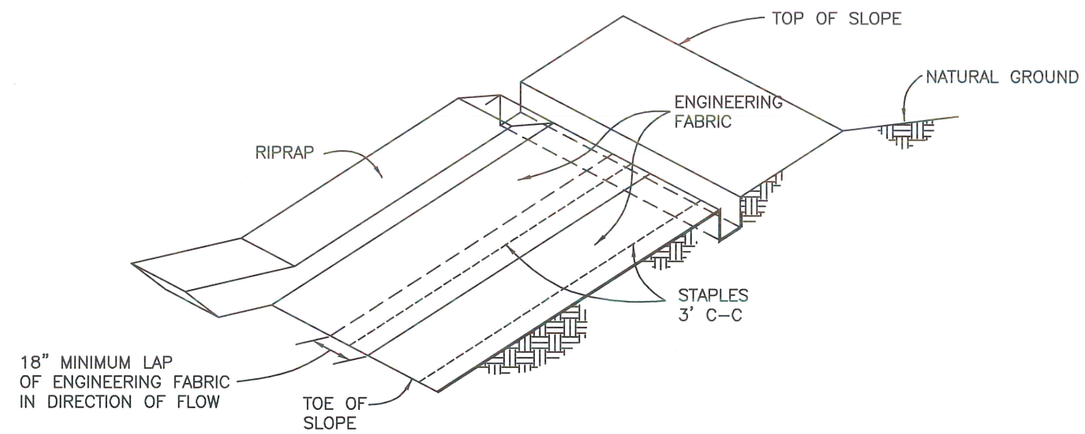

EXCAVATE 12"x12" TRENCH ALONG TOP OF REVETMENT. PLACE END OF ENGINEERING FABRIC STRIPS INTO TRENCH WITH STAPLES AS SHOWN. BACKFILL WITH THE EXCAVATED MATERIAL AND COMPACT. THE ENGINEER MAY PERMIT THE USE OF THE WHEELS OF PNEUMATIC–TIRED EQUIPMENT FOR CONSOLIDATING THE TRENCH BACKFILL MATERIAL.

DETAILS OF PLACEMENT OF ENGINEERING FABRIC

NO SCALE

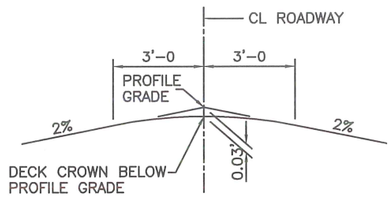

CROWN TEMPLATE

NO SCALE

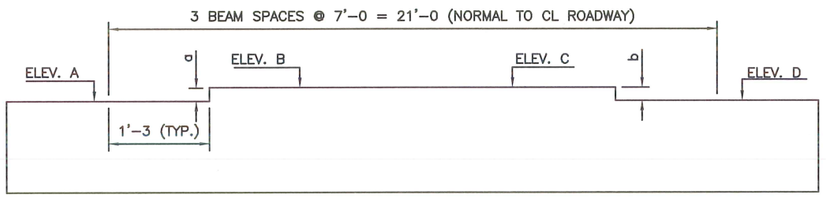

ABUTMENT & PIER STEP DIAGRAM

LOOKING UP STATIONING
NOT TO SCALE

ABUTMENT WING ELEVATIONS

LOCATION	ELEVATION "A"	ELEVATION "B"	ELEVATION "C"
NW ABUT.	1142.82	1142.85	–
SW ABUT.	1142.82	1142.85	–
NE ABUT.	1142.23	1142.20	1142.18
SE ABUT.	1142.23	1142.20	1142.18

NOTE:
REFER TO PLAN SHEET H24–08–06 FOR LOCATION OF WING ELEVATIONS A, B AND C. ELEVATIONS ARE AT EDGE OF SLAB.

TABLE OF ABUTMENT & PIER STEPS

LOCATION	a	b
W. ABUTMENT	0.14	0.14
W. PIER	0.14	0.14
E. PIER	0.14	0.14
E. ABUTMENT	0.14	0.14

TABLE OF ABUTMENT & PIER ELEVATIONS

LOCATON	ELEV. A	ELEV. B	ELEV. C	ELEV. D
W. ABUTMENT	1138.13	1138.27	1138.27	1138.13
W. PIER	1138.02	1138.16	1138.16	1138.02
E. PIER	1137.55	1137.69	1137.69	1137.55
E. ABUTMENT	1137.53	1137.67	1137.67	1137.53

LOW STEP 1137.53

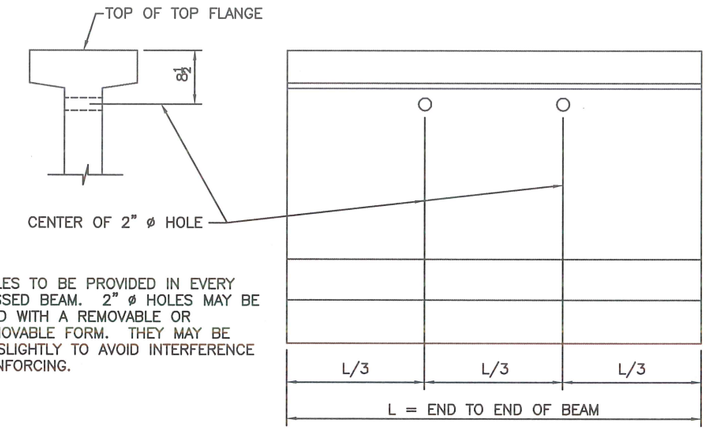

NOTE:
2" ø HOLES TO BE PROVIDED IN EVERY PRESTRESSED BEAM. 2" ø HOLES MAY BE PRODUCED WITH A REMOVABLE OR NON–REMOVABLE FORM. THEY MAY BE SHIFTED SLIGHTLY TO AVOID INTERFERENCE WITH REINFORCING.

VENT HOLE DETAIL

NOT TO SCALE

TOP OF SLAB ELEVATIONS

LOCATION	CL W. ABUT. BRG.								CL W. PIER BEARINGS									CL E. PIER BEARINGS									CL E. ABUT. BRG.
	1	2	3	4	5	6	7	8	9	10	11	12	13	14	15	16	17	18	19	20	21	22	23	24	25	26	27
N. GUTTER LINE	1142.83	1142.81	1142.78	1142.76	1142.74	1142.71	1142.69	1142.67	1142.64	1142.64	1142.61	1142.58	1142.56	1142.53	1142.50	1142.48	1142.45	1142.42	1142.42	1142.39	1142.37	1142.35	1142.32	1142.30	1142.28	1142.25	1142.23
BEAM LINE A	1142.86	1142.84	1142.81	1142.79	1142.77	1142.74	1142.72	1142.70	1142.67	1142.67	1142.64	1142.61	1142.59	1142.56	1142.53	1142.51	1142.48	1142.45	1142.45	1142.42	1142.40	1142.38	1142.35	1142.33	1142.31	1142.28	1142.26
BEAM LINE B	1143.00	1142.98	1142.95	1142.93	1142.91	1142.88	1142.86	1142.84	1142.81	1142.81	1142.78	1142.75	1142.73	1142.70	1142.67	1142.65	1142.62	1142.59	1142.59	1142.56	1142.54	1142.52	1142.49	1142.47	1142.45	1142.42	1142.40
CROWN LINE	1143.04	1143.02	1142.99	1142.97	1142.95	1142.92	1142.90	1142.88	1142.85	1142.85	1142.82	1142.79	1142.77	1142.74	1142.71	1142.69	1142.66	1142.63	1142.63	1142.60	1142.58	1142.56	1142.53	1142.51	1142.49	1142.46	1142.44
BEAM LINE C	1143.00	1142.98	1142.95	1142.93	1142.91	1142.88	1142.86	1142.84	1142.81	1142.81	1142.78	1142.75	1142.73	1142.70	1142.67	1142.65	1142.62	1142.59	1142.59	1142.56	1142.54	1142.52	1142.49	1142.47	1142.45	1142.42	1142.40
BEAM LINE D	1142.86	1142.84	1142.81	1142.79	1142.77	1142.74	1142.72	1142.70	1142.67	1142.67	1142.64	1142.61	1142.59	1142.56	1142.53	1142.51	1142.48	1142.45	1142.45	1142.42	1142.40	1142.38	1142.35	1142.33	1142.31	1142.28	1142.26
S. GUTTER LINE	1142.83	1142.81	1142.78	1142.76	1142.74	1142.71	1142.69	1142.67	1142.64	1142.64	1142.61	1142.58	1142.56	1142.53	1142.50	1142.48	1142.45	1142.42	1142.42	1142.39	1142.37	1142.35	1142.32	1142.30	1142.28	1142.25	1142.23

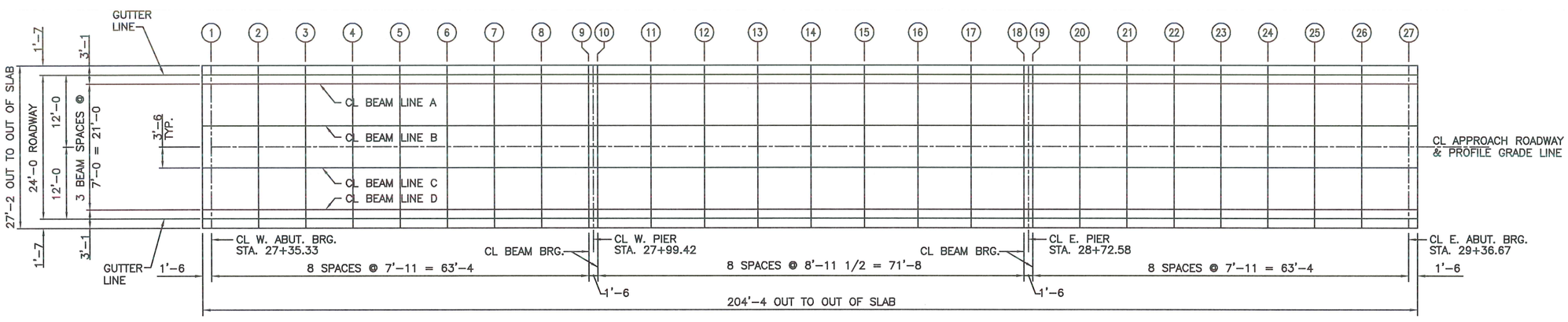

TOP OF SLAB ELEVATION LAYOUT

0' 10' 20' 30'

TOP OF SLAB ELEVATIONS

REINFORCING STEEL–TWO OPEN RAILS

BRIDGE LENGTH			201'–4		
BAR	LOCATION	SHAPE	NO.	LENGTH	WEIGHT
6c1	VERTICAL, END SECTION & ABUT. DIAPH. EXT.	—	84	VARIES	572
6c3	VERTICAL, END SECTION	⌐	8	VARIES	39
4c4	VERTICAL HOOPS, END SECTION	⊓	6	2'–10	11
4c5	VERT. HOOPS, END SEC. & ABUT. DIAPH. EXT.	⊓	26	3'–1	53
4c6	VERTICAL HOOPS, END SECTION	⊓	4	VARIES	6
6d1	HORIZONTAL, END SECTION–BACK FACE	—	10	VARIES	77
6d2	HORIZONTAL, END SECTION–TRAFFIC FACE	⌣	14	VARIES	119
6d3	HORIZONTAL, END SECTION–BACK FACE	—	2	7'–1	21
6d4	HORIZONTAL, END SECTION–TRAFFIC FACE	⌣	2	7'–2	22
5d3	HORIZONTAL, ABUT. DIAPH. EXT.–BOTH FACES (EAST END)	—	24	7'–2	180
5d3	WING FOOTING–TRAFFIC FACE (WEST END)	—	4	4'–10	20
6h1	LONGITUDINAL, OPEN RAIL	—	24	40'–0	2,884
6h2	LONGITUDINAL, OPEN RAIL, ENDS	—	12	30'–4	1,093
6j1	VERTICAL DOWELS, OPEN RAIL	⌐	440	4'–0	2,644
4j2	HOOP, INTERIOR POST	▭	400	4'–9	1,269
4j3	HOOP, OPEN RAIL	▭	680	5'–5	2,460
4j4	HOOP, END POST	▭	32	6'–7	141
4t1	WING FOOTING TIE BARS (EAST END)	⊓	8	VARIES	10
4t2	WING FOOTING TIE BARS	⊓	40	1'–11	51
TOTAL LBS. (INCLUDE WITH SUPERSTRUCTURE REINFORCING)					11,672

BENT BAR DETAILS

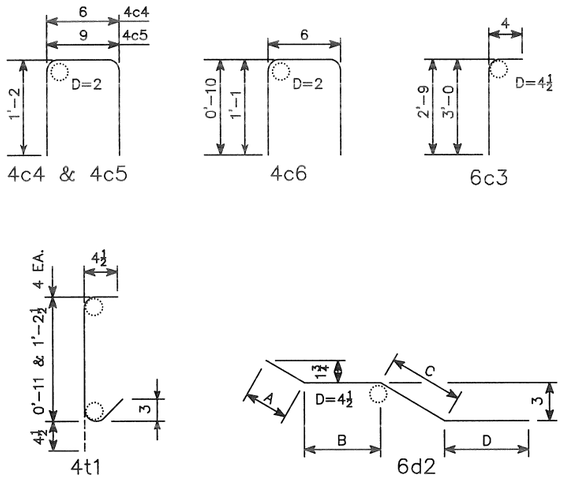

6d2 VARIABLE LENGTHS							
SHAPE	NO.	A	B	C	D	LENGTH	WEIGHT
⌣	6	10¾	2'–0	1'–7½	2'–2½	6'–8¾	60.7
⌣	2	1½	2'–0	1'–7½	2'–2½	5'–11½	17.9
⌣	2	0	1'–3	1'–7½	2'–2½	5'–1	15.3
⌣	2	0	7½	1'–7½	2'–2½	4'–5½	13.4
⌣	2	0	0	1'–6¼	2'–2½	3'–8¾	11.2
TOTAL	14						118.5

NOTE:
ALL DIMENSIONS ARE OUT TO OUT. D = PIN DIAMETER.

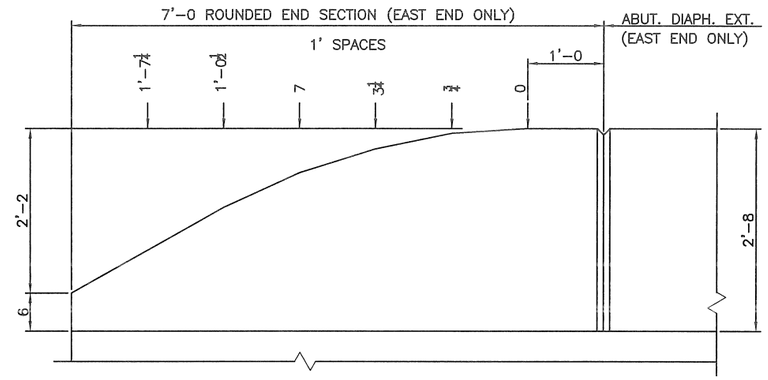

PART ELEVATION

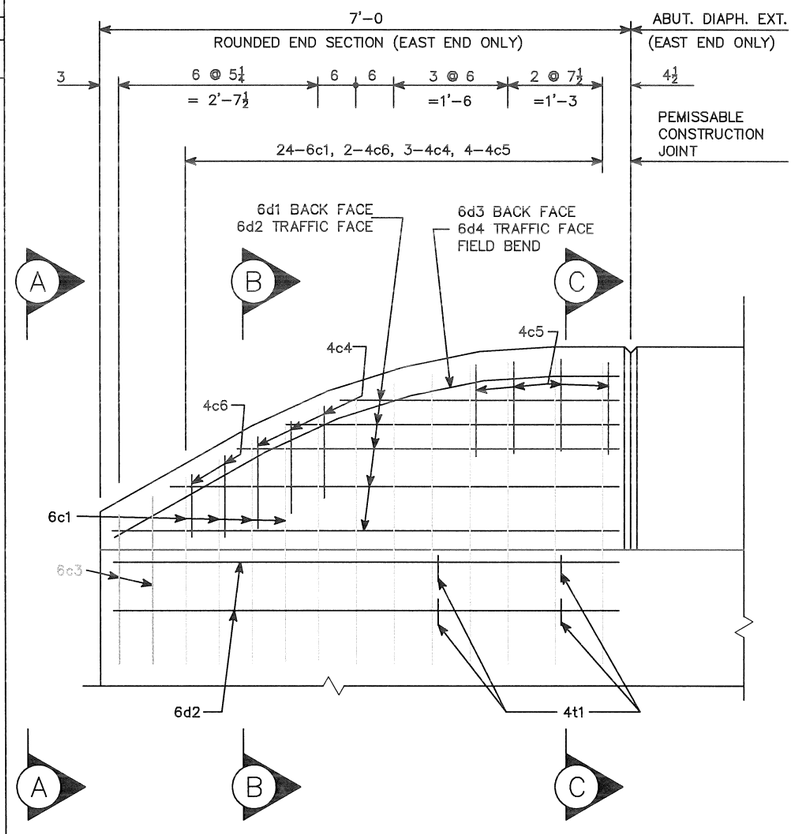

ELEVATION OF ROUNDED END SECTION

CONCRETE PLACEMENT SUMMARY – C.Y.

BRIDGE LENGTH		201'–4
OPEN RAIL SECTION	2 @ 0.077 CU. YDS. PER FT.	31.7
OPEN RAIL–ROUNDED END SECTION	2 @ 0.504 CU. YDS.	1.1
OPEN RAIL–ABUT. DIAPH. SECTION	2 @ 0.107 CU. YDS. PER FT.	1.1
OPEN RAIL–END POSTS	4 @ 0.11 CU. YDS.	0.4
OPEN RAIL–INTERIOR POSTS	2 x "E" @ 0.07 CU. YDS.	3.5
	TOTAL (C.Y.)	37.8

FOR "E" SEE SHEET H24–39–06.

NOTE:
ROUNDED END SECTION AS DETAILED ON THIS SHEET SHALL BE USED INSTEAD OF END SECTION SHOWN ON STD. SHEETS H24–39–06 AND H24–40–06. REFER TO STD. SHEETS H24–39–06 AND H24–40–06 FOR ADDITIONAL DETAILS.

LISTED BARS

BAR 6c1
12 BARS AT 4'–9
36 BARS AT 4'–11
36 BARS VAR. – 4 EA. LGTH.
3'–3, 3'–6, 3'–9, 3'–11,
4'–2, 4'–4, 4'–6, 4'–7, 4'–8

BAR 6c3
4 AT 3'–1
4 AT 3'–4

BAR 4c6
2 AT 2'–2
2 AT 2'–8

BAR 6d1
10 BARS VAR. – 2 EA. LGTH.
3'–8, 4'–5, 5'–0, 5'–11, 6'–8

BAR 6d2
SEE TABLE THIS SHEET

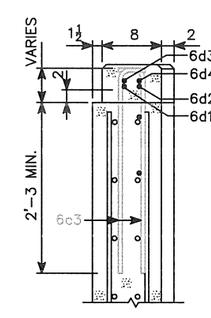

VIEW A–A

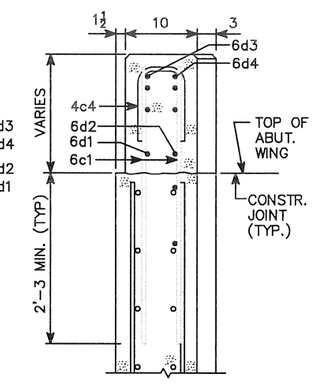

SECTION B–B

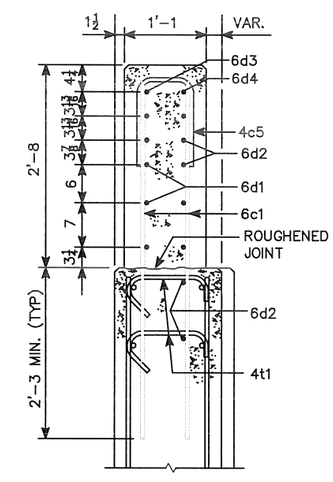

SECTION C–C

ROUNDED END SECTION DETAILS

REINFORCING BAR LIST

ONE SUPERSTRUCTURE AND TWO ABUTMENTS

		℄–℄ ABUT. BRG.	201'–4		
		℄–℄ BEAM BRG.	63'–4	71'–8	63'–4
		BEAM SERIES	C BEAM		
BAR	LOCATION	SHAPE	NO.	LENGTH	WEIGHT
6a1	SLAB TRANSV. TOP & BOTT.		489	26'–10	19,708
5b1	SLAB LONGITUDINAL, TOP & BOTT.		244	40'–0	10,180
5b2	SLAB LONGITUDINAL, TOP & BOTT., ENDS		122	26'–2	3,330
6b3	SLAB LONGITUDINAL, TOP @ PIERS		—	—	—
7b3	SLAB LONGITUDINAL, TOP @ PIERS		50	18'–0	1,840
8b3	SLAB LONGITUDINAL, TOP @ PIERS		—	—	—
5d1	PIER DIAPH. ENDS		12	3'–6	44
5d2	PIER & ABUT. DIAPH. LONGIT.		54	6'–1	343
5d3	PIER & ABUT. DIAPH. LONGIT.		18	5'–2	97
5d4	PIER DIAPH. LONGIT.		2	23'–9	50
5d5	ABUT. DIAPH. ENDS		12	5'–0	63
5d6	ABUT. DIAPH. LONGIT. B.F.		8	26'–9	223
5d7	PAVING NOTCH LONGIT.		4	26'–9	112
5d8	ABUT. DIAPH. WING EXT. LONGIT. (WEST END)		12	10'–9	135
5d8	ABUT. DIAPH. WING EXT. LONGIT. (EAST END)		12	7'–8	96
5d9	ABUT. DIAPH. WING EXT. LONGIT. (WEST END)		12	10'–8	134
5d9	ABUT. DIAPH. WING EXT. LONGIT. (EAST END)		12	7'–8	96
5e1	PIER DIAPH. HOOPS		24	10'–8	267
5e2	PIER DIAPH. TIES ENDS		4	2'–7	11
5e3	PIER DIAPH. TIES		24	2'–9	69
5e4	PIER DIAPH. HOOPS ENDS		4	10'–6	44
8f1	ABUT. FOOTING LONGIT.		18	27'–0	1,298
8f3	ABUT. EXTENSION LONGIT.		16	10'–1	431
8f4	ABUT. EXTENSION LONGIT.		16	8'–6	363
8g1	ABUT. VERT.		88	6'–8	1,566
8g3	ABUT. DIAPH. VERT. B.F.		38	15'–9	1,598
6g4	ABUT. DIAPH. WING EXT. VERT.		40	6'–0	360
5h1	ABUT. WING HORIZ. B.F.		18	6'–8	125
5h2	ABUT. TO WING ANCHOR		6	4'–11	31
5h3	ABUT. WING HORIZ. TRAFFIC FACE		18	6'–9	127
5h4	ABUT. TO WING ANCHOR		6	4'–11	31
5j1	TOP OF SLAB TRANSV. (AT RAIL)		488	6'–3	3,181
5k1	PAVING NOTCH		42	4'–9	208
5k2	PAVING NOTCH		42	3'–5	150
5p1	ABUTMENT HOOPS (WOOD/STEEL)		76	10'–6	832
5p2	ABUTMENT HOOPS		24	10'–8	267
6p3	ABUT. BOTT. AT PILES		24	6'–8	240
5r1	PAVING BLOCK LIFTING LOOPS		8	2'–10	24
5s1	WING VERT.		32	6'–11	231
4t1	UNDER BEAMS AT ABUTMENTS		8	4'–9	25
#2	PILE SPIRAL (WOOD/STEEL)		16	38'–6	103
	SPIRAL SPACERS, L 7/8 x 7/8 x 1/8 x 0.70 (WOOD/STL.)		48	1'–10	62
	OPEN RAIL				11,672
	TOTAL W/ WOOD PILES				
	TOTAL W/ STEEL H–PILES				59,767

REFER TO STANDARD BRIDGE PLAN H24–10–06 FOR BENT BAR DETAILS.

GENERAL LRFD PILE NOTE:

THIS PROJECT USES THE LOAD AND RESISTANCE FACTOR DESIGN (LRFD) METHODOLOGY FOR DETERMINING PILE CONTRACT LENGTH AND NOMINAL AXIAL BEARING RESISTANCE. NOMINAL AXIAL BEARING RESISTANCES WILL BE LARGER THAN BEARING VALUES IN THE PAST, BUT CONSTRUCTION CONTROL BLOW COUNTS WILL BE APPROXIMATELY THE SAME. A WEAP ANALYSIS AND BEARING GRAPH WILL BE PROVIDED BY THE ENGINEER THAT GIVES THE RELATIONSHIP BETWEEN REQUIRED NOMINAL AXIAL BEARING RESISTANCE AND BLOW COUNT.

WEST ABUTMENT PILE DESIGN NOTES:

THE CONTRACT LENGTH OF 80 FEET FOR THE WEST ABUTMENT PILES IS BASED ON A COHESIVE SOIL CLASSIFICATION, A TOTAL FACTORED AXIAL LOAD PER PILE (PU) OF 128 KIPS, AND A GEOTECHNICAL RESISTANCE FACTOR (PHI) OF 0.65.

THE NOMINAL AXIAL BEARING RESISTANCE FOR CONSTRUCTION CONTROL WAS DETERMINED FROM A COHESIVE SOIL CLASSIFICATION AND A GEOTECHNICAL RESISTANCE FACTOR (PHI) OF 0.77. PILES ARE ASSUMED TO BE DRIVEN FROM A START ELEVATION AT THE BOTTOM OF PREBORE.

WEST ABUTMENT PILE DRIVING NOTE:

THE REQUIRED NOMINAL AXIAL BEARING RESISTANCE FOR WEST ABUTMENT PILES IS 83 TONS AT END OF DRIVE. IF RETAPS ARE NECESSARY TO ACHIEVE BEARING, THE REQUIRED NOMINAL AXIAL BEARING RESISTANCE IS 98 TONS AT ONE–DAY OR LATER RETAPS. THE PILE CONTRACT LENGTH SHALL BE DRIVEN AS PER PLAN UNLESS PILES REACH REFUSAL. IN NO CASE SHALL A PILE BE EMBEDDED LESS THAN 15 FEET. CONSTRUCTION CONTROL REQUIRES A WEAP ANALYSIS WITH BEARING GRAPH.

WEST PIER PILE DESIGN NOTES:

THE CONTRACT LENGTH OF 65 FEET FOR THE WEST PIER PILES IS BASED ON A COHESIVE SOIL CLASSIFICATION, A TOTAL FACTORED AXIAL LOAD PER PILE (PU) OF 142 KIPS, AND A GEOTECHNICAL RESISTANCE FACTOR (PHI) OF 0.65.

THE NOMINAL AXIAL BEARING RESISTANCE FOR CONSTRUCTION CONTROL WAS DETERMINED FROM A COHESIVE SOIL CLASSIFICATION AND A GEOTECHNICAL RESISTANCE FACTOR (PHI) OF 0.77. PILES ARE ASSUMED TO BE DRIVEN FROM A START ELEVATION AT THE BOTTOM OF FOOTING.

WEST PIER PILE DRIVING NOTE:

THE REQUIRED NOMINAL AXIAL BEARING RESISTANCE FOR WEST PIER PILES IS 93 TONS AT END OF DRIVE. IF RETAPS ARE NECESSARY TO ACHIEVE BEARING, THE REQUIRED NOMINAL AXIAL BEARING RESISTANCE IS 109 TONS AT ONE–DAY OR LATER RETAPS. THE PILE CONTRACT LENGTH SHALL BE DRIVEN AS PER PLAN UNLESS PILES REACH REFUSAL. IN NO CASE SHALL A PILE BE EMBEDDED LESS THAN 10 FEET. CONSTRUCTION CONTROL REQUIRES A WEAP ANALYSIS WITH BEARING GRAPH.

EAST PIER PILE DESIGN NOTES:

THE CONTRACT LENGTH OF 65 FEET FOR THE EAST PIER PILES IS BASED ON A COHESIVE SOIL CLASSIFICATION, A TOTAL FACTORED AXIAL LOAD PER PILE (PU) OF 142 KIPS, AND A GEOTECHNICAL RESISTANCE FACTOR (PHI) OF 0.65.

THE NOMINAL AXIAL BEARING RESISTANCE FOR CONSTRUCTION CONTROL WAS DETERMINED FROM A COHESIVE SOIL CLASSIFICATION AND A GEOTECHNICAL RESISTANCE FACTOR (PHI) OF 0.77. PILES ARE ASSUMED TO BE DRIVEN FROM A START ELEVATION AT THE BOTTOM OF FOOTING.

EAST PIER PILE DRIVING NOTE:

THE REQUIRED NOMINAL AXIAL BEARING RESISTANCE FOR EAST PIER PILES IS 92 TONS AT END OF DRIVE. IF RETAPS ARE NECESSARY TO ACHIEVE BEARING, THE REQUIRED NOMINAL AXIAL BEARING RESISTANCE IS 109 TONS AT ONE–DAY OR LATER RETAPS. THE PILE CONTRACT LENGTH SHALL BE DRIVEN AS PER PLAN UNLESS PILES REACH REFUSAL. IN NO CASE SHALL A PILE BE EMBEDDED LESS THAN 10 FEET. CONSTRUCTION CONTROL REQUIRES A WEAP ANALYSIS WITH BEARING GRAPH.

EAST ABUTMENT PILE DESIGN NOTES:

THE CONTRACT LENGTH OF 90 FEET FOR THE EAST ABUTMENT PILES IS BASED ON A COHESIVE SOIL CLASSIFICATION, A TOTAL FACTORED AXIAL LOAD PER PILE (PU) OF 128 KIPS, AND A GEOTECHNICAL RESISTANCE FACTOR (PHI) OF 0.65.

THE NOMINAL AXIAL BEARING RESISTANCE FOR CONSTRUCTION CONTROL WAS DETERMINED FROM A COHESIVE SOIL CLASSIFICATION AND A GEOTECHNICAL RESISTANCE FACTOR (PHI) OF 0.77. PILES ARE ASSUMED TO BE DRIVEN FROM A START ELEVATION AT THE BOTTOM OF PREBORE.

EAST ABUTMENT PILE DRIVING NOTE:

THE REQUIRED NOMINAL AXIAL BEARING RESISTANCE FOR EAST ABUTMENT PILES IS 83 TONS AT END OF DRIVE. IF RETAPS ARE NECESSARY TO ACHIEVE BEARING, THE REQUIRED NOMINAL AXIAL BEARING RESISTANCE IS 98 TONS AT ONE–DAY OR LATER RETAPS. THE PILE CONTRACT LENGTH SHALL BE DRIVEN AS PER PLAN UNLESS PILES REACH REFUSAL. IN NO CASE SHALL A PILE BE EMBEDDED LESS THAN 15 FEET. CONSTRUCTION CONTROL REQUIRES A WEAP ANALYSIS WITH BEARING GRAPH.

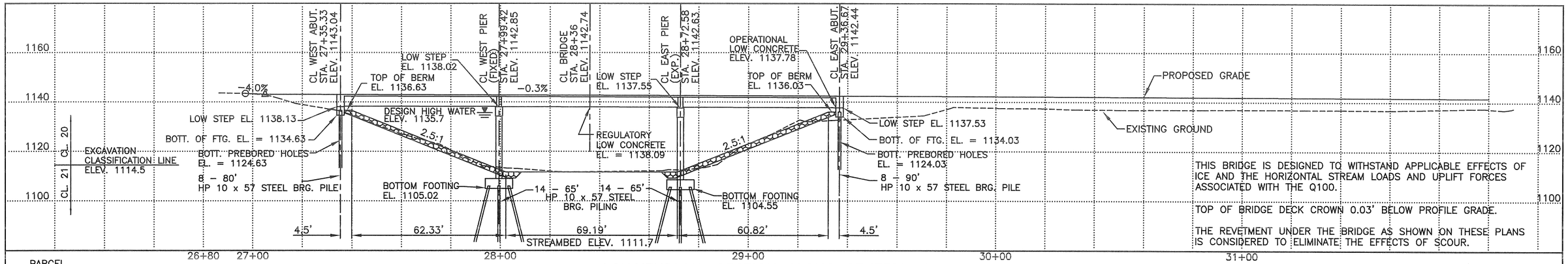

THIS BRIDGE IS DESIGNED TO WITHSTAND APPLICABLE EFFECTS OF ICE AND THE HORIZONTAL STREAM LOADS AND UPLIFT FORCES ASSOCIATED WITH THE Q100.

TOP OF BRIDGE DECK CROWN 0.03' BELOW PROFILE GRADE.

THE REVETMENT UNDER THE BRIDGE AS SHOWN ON THESE PLANS IS CONSIDERED TO ELIMINATE THE EFFECTS OF SCOUR.

LONGITUDINAL SECTION ALONG CENTERLINE

PARCEL NUMBER	PROPERTY OWNER
1	GARY D. POHLMAN, JUDY J. POHLMAN
2	RICK L. MOORE, BRADLEY D. MOORE, MICHELLE R. MOORE
3	DONALD MARTZ

BM: STA. 27+15, 111' RT. RR SPIKE IN P.P., EL. 1139.36

0' 20' 40' 60'

EXISTING BRIDGE
EXISTING REVETMENT
PROPOSED CLASS B REVETMENT (TO EXTEND 3 FEET BEYOND EDGE OF BRIDGE DECK)

STA. 28+67, 219' RT., EXISTING 258'x16.1' STEEL THRU TRUSS W/3 STEEL BEAM APPROACH SPANS, TIMBER DECK, AND STEEL TRESTLE PILES TO BE REMOVED FROM THE PROJECT RIGHT-OF-WAY. CONTRACTOR SHALL CONSTRUCT 201'-4 X 24' PPCB BRIDGE, SKEW 0° AT STA. 28+36. D.A. = 257 SQ. MI.

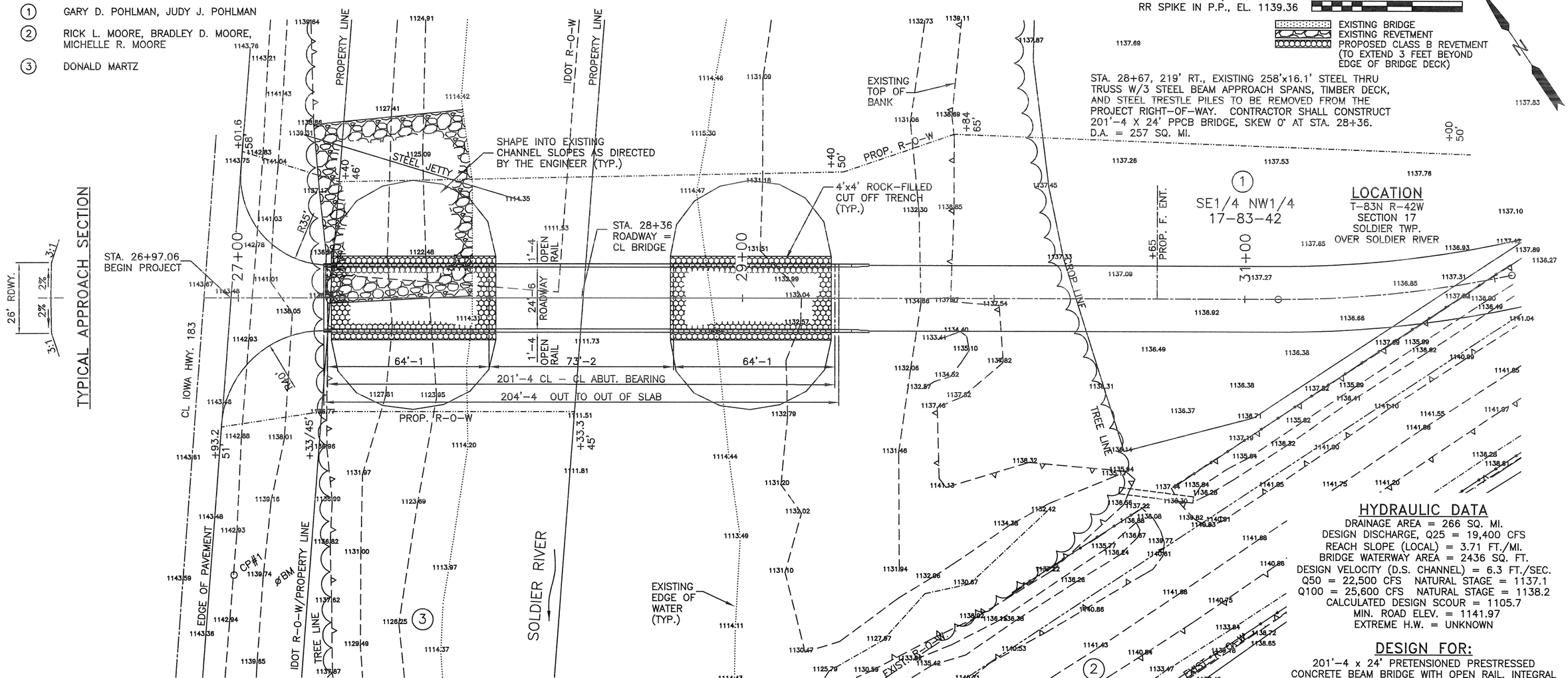

LOCATION

T-83N R-42W
SECTION 17
SOLDIER TWP.
OVER SOLDIER RIVER

HYDRAULIC DATA

DRAINAGE AREA = 266 SQ. MI.
DESIGN DISCHARGE, Q25 = 19,400 CFS
REACH SLOPE (LOCAL) = 3.71 FT./MI.
BRIDGE WATERWAY AREA = 2436 SQ. FT.
DESIGN VELOCITY (D.S. CHANNEL) = 6.3 FT./SEC.
Q50 = 22,500 CFS NATURAL STAGE = 1137.1
Q100 = 25,600 CFS NATURAL STAGE = 1138.2
CALCULATED DESIGN SCOUR = 1105.7
MIN. ROAD ELEV. = 1141.97
EXTREME H.W. = UNKNOWN

DESIGN FOR:

201'-4 x 24' PRETENSIONED PRESTRESSED CONCRETE BEAM BRIDGE WITH OPEN RAIL, INTEGRAL ABUTMENTS & TEE PIERS
STA. 28+36, SKEW 0°
MONONA COUNTY
PROJECT NO. BROS-SWAP-C067(87)--SE-67

SITUATION PLAN

REV.:

SUNDQUIST ENGINEERING, P.C. | 910 7TH STREET, ONAWA, IA 51040 | P712 423 3131 F712 433 3134 SUNDQUISTENGINEERING.COM

SE PROJECT NO. 12219 DATE: 06/19 DRAWN BY: TKK REVIEWED BY: TJG APPROVED BY: PEM

MONONA COUNTY PROJECT NO. BROS-SWAP-C067(87)--SE-67 SHEET VI

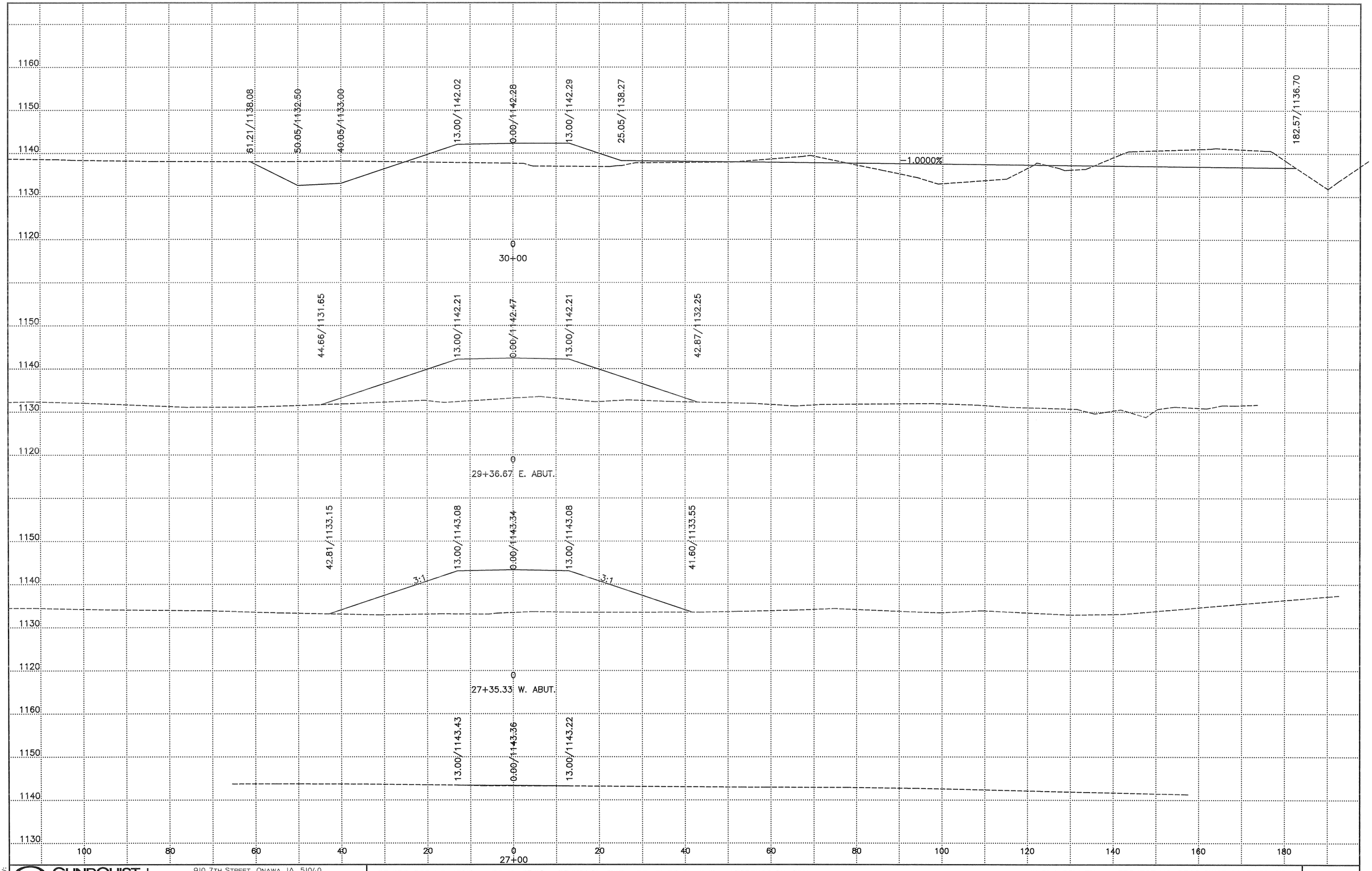

REV:

SUNDQUIST ENGINEERING, P.C. | 910 7TH STREET, ONAWA, IA 51040 P712 423 3131 F712 433 3134 SUNDQUISTENGINEERING.COM

SE PROJECT NO. 12219 DATE: 07/19 DRAWN BY: TKK REVIEWED BY: TJG APPROVED BY: PEM

MONONA COUNTY PROJECT NO. BROS-SWAP-C067(87)--SE-67 SHEET WI

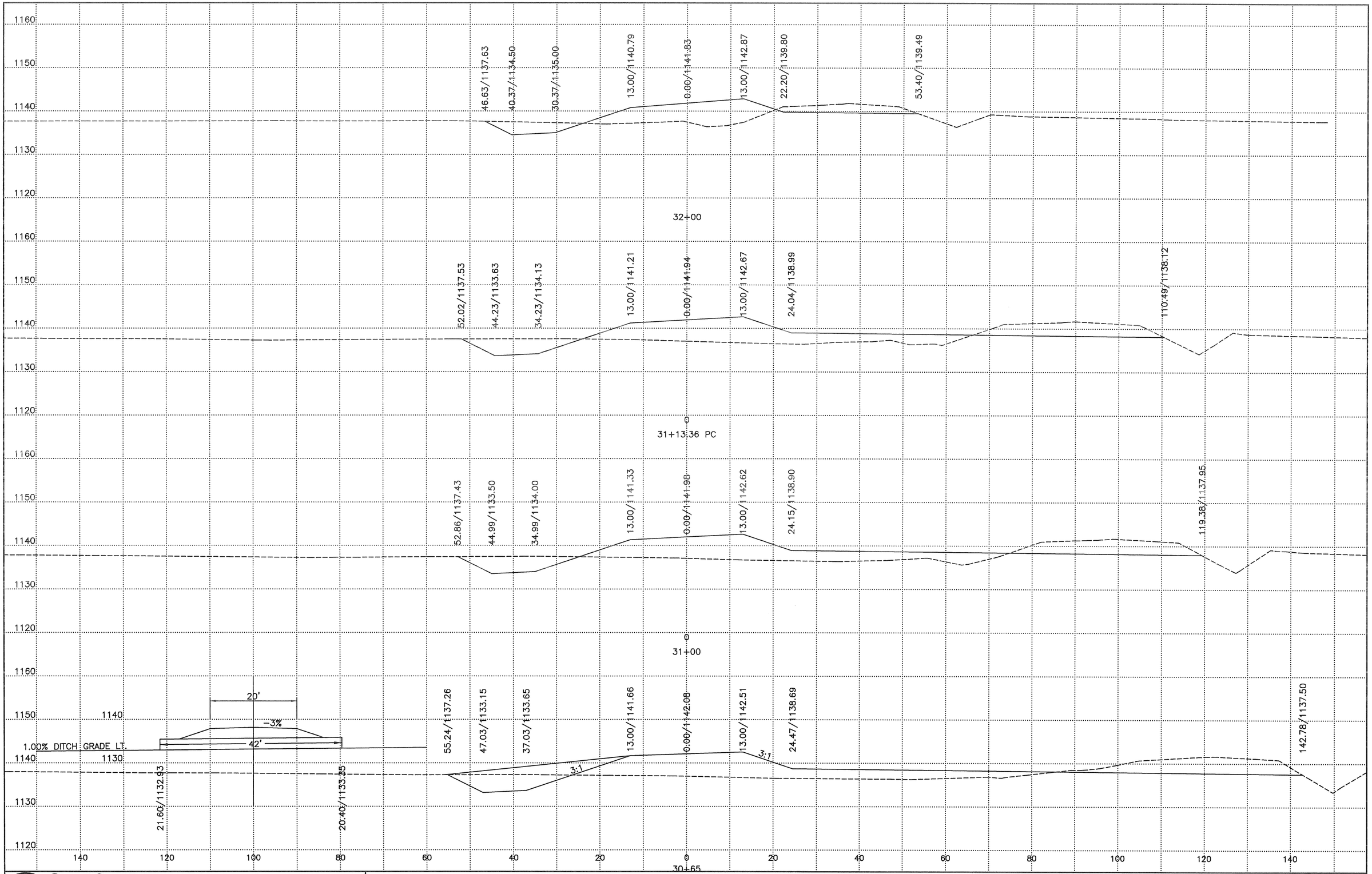

REV:

SUNDQUIST ENGINEERING, P.C. | 910 7TH STREET, ONAWA, IA 51040 P712 423 3131 F712 433 3134 SUNDQUISTENGINEERING.COM

SE PROJECT NO. 12219 DATE: 07/19 DRAWN BY: TKK REVIEWED BY: TJG APPROVED BY: PEM

MONONA COUNTY PROJECT NO. BROS-SWAP-C067(87)--SE-67 SHEET W2

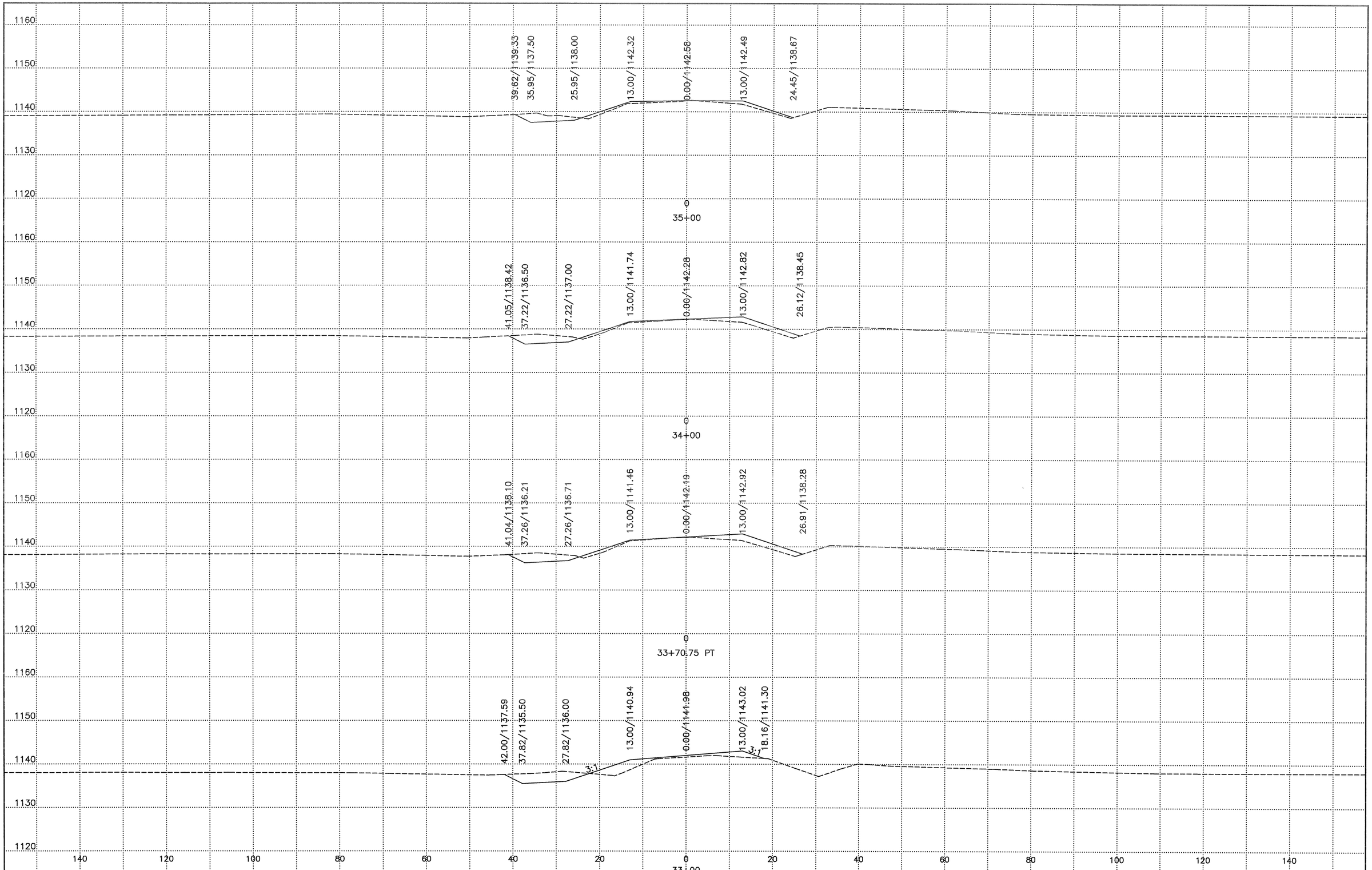

REV:

SUNDQUIST ENGINEERING, P.C. | 910 7TH STREET, ONAWA, IA 51040 P712 423 3131 F712 433 3134 SUNDQUISTENGINEERING.COM

SE PROJECT NO. 12219 DATE: 07/19 DRAWN BY: TKK REVIEWED BY: TJG APPROVED BY: PEM

MONONA COUNTY PROJECT NO. BROS-SWAP-C067(87)--SE-67 SHEET W3

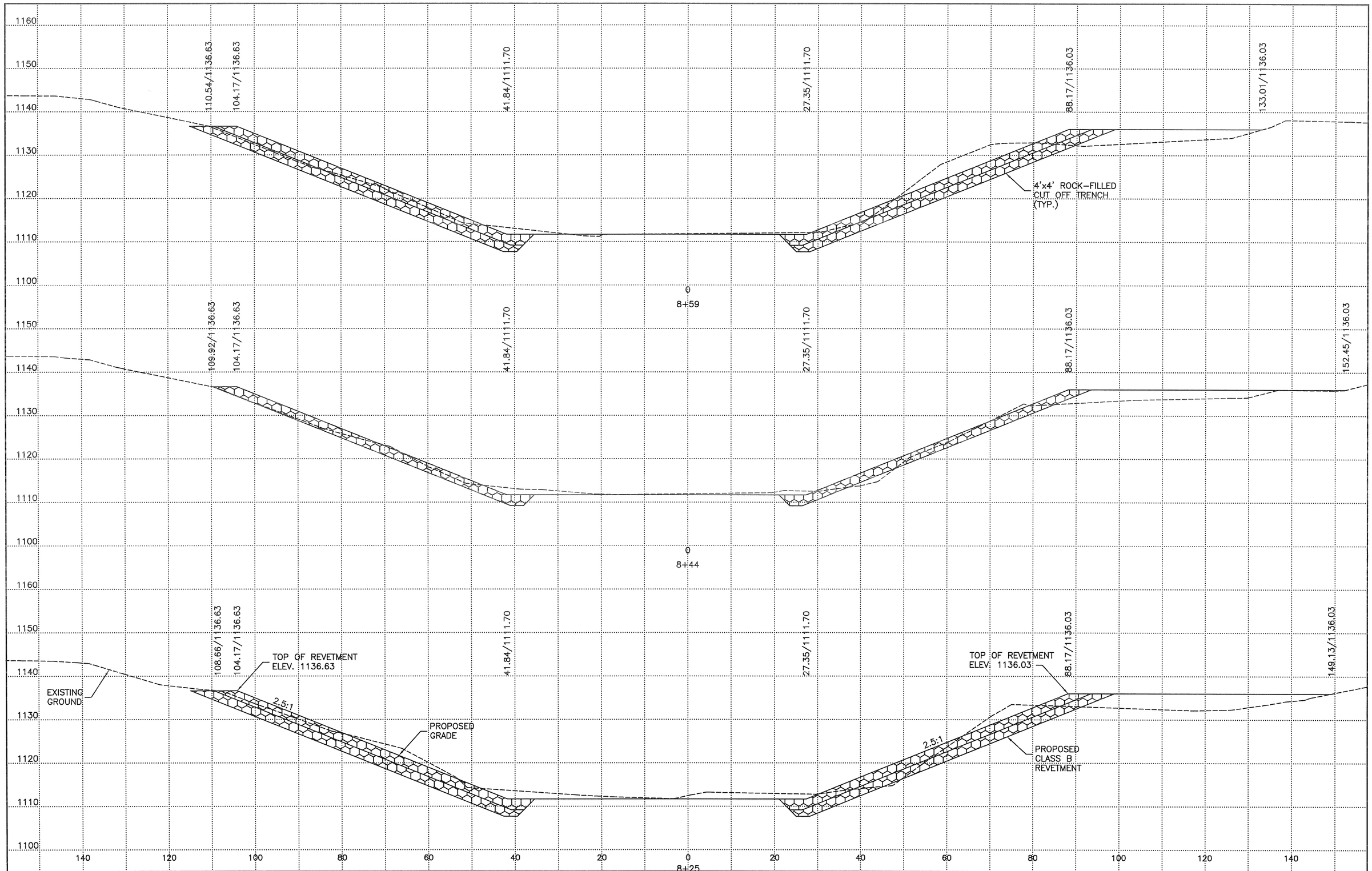

REV:

SUNDQUIST ENGINEERING, P.C. | 910 7TH STREET, ONAWA, IA 51040 P712 423 3131 F712 433 3134 SUNDQUISTENGINEERING.COM

SE PROJECT NO. 12219 DATE: 07/19 DRAWN BY: TKK REVIEWED BY: TJG APPROVED BY: PEM

MONONA COUNTY PROJECT NO. BROS-SWAP-C067(87)--SE-67 SHEET XI