BRIDGE DECK OVERLAY
BRFN-028-2(44)--39-77

LETTING DATE
11-19-2019

POLK COUNTY

POLK COUNTY - DESIGN 420

LEGEND

- INTERSTATE ROUTE
- FREEWAY OR EXPRESSWAY ROUTE (30)
- U.S. NUMBERED ROUTE (6)
- BUSINESS ROUTE (61)
- STATE NUMBERED ROUTE (44)
- UNSIGNED ROUTE (461)
- COUNTY NUMBERED ROUTE (R38)
- SECONDARY ROAD OR ADJOINING CITY STREET
- CITY STREET
- PARK, INSTITUTION, OR FEDERAL ROAD
- RAILROAD
- CORPORATION LINE
- SECTION LINE
- CUL-DE-SAC
- SECTION, TOWNSHIP & RANGE NUMBERS — 9, T-81N, R-30W

IOWA DOT
Highway Division

PLANS OF PROPOSED IMPROVEMENTS ON THE

PRIMARY ROAD SYSTEM

POLK COUNTY

BRIDGE DECK OVERLAY

IA 28 OVER WALNUT CREEK

0.4 MI. SOUTH OF I-235 IN DES MOINES

THE IOWA DEPARTMENT OF TRANSPORTATION STANDARD SPECIFICATIONS FOR HIGHWAY AND BRIDGE CONSTRUCTION, SERIES 2015, PLUS APPLICABLE GENERAL SUPPLEMENTAL SPECIFICATIONS, DEVELOPMENTAL SPECIFICATIONS, SUPPLEMENTAL SPECIFICATIONS AND SPECIAL PROVISIONS SHALL APPLY TO CONSTRUCTION WORK ON THIS PROJECT.

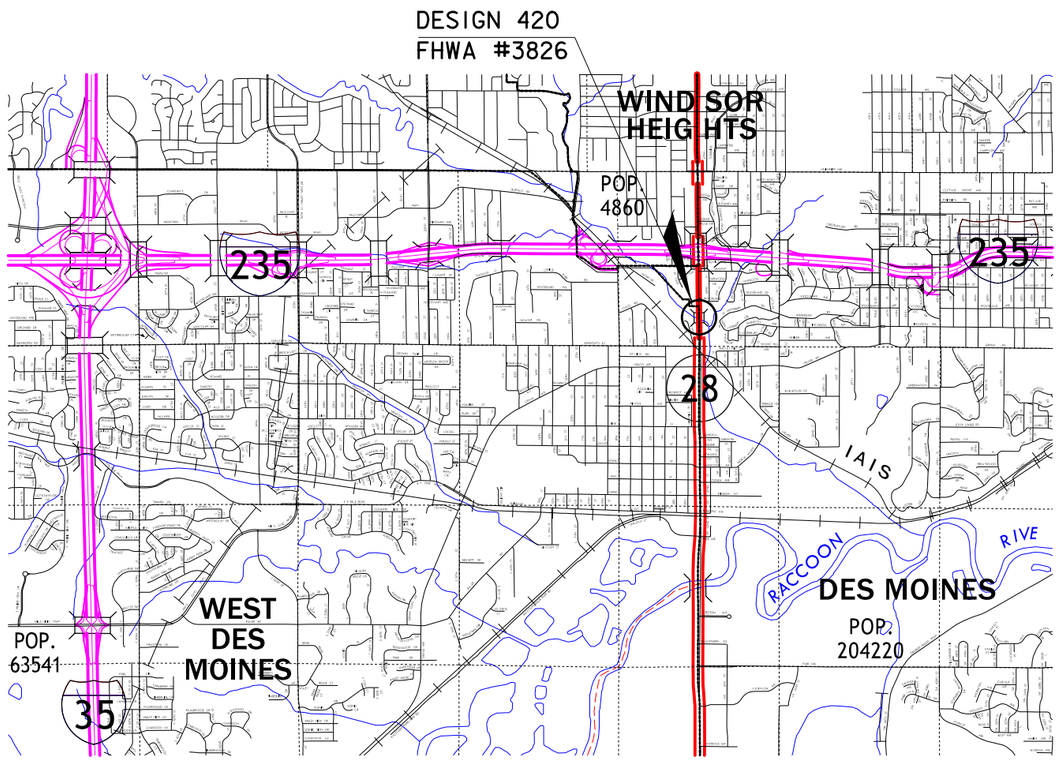

LOCATION MAP
(PART CITY OF DES MOINES)

PROJECT DIRECTORY NAME: 7702801015

	TOTAL SHEETS
	37

PROJECT NUMBER
BRFN-028-2(44)--39-77
R.O.W. PROJECT NUMBER
PROJECT IDENTIFICATION NUMBER
15-77-028-010

INDEX OF SHEETS

NO.	DESCRIPTION
1	TITLE SHEET
2	ESTIMATE SHEET - DESIGN 420
2-16	DESIGN 420
C.1	ESTIMATE SHEET FOR ROADWAY
A.1-U.3	ROADWAY SHEETS

REVISIONS

IOWA ONE CALL
1-800-292-8989
www.iowaonecall.com
811 Know what's below. Call before you dig.

STANDARD ROAD PLANS

STANDARD ROAD PLANS ARE LISTED ON SHEET NUMBER C.2

DESIGN DATA URBAN

2018 AADT	27,500	V.P.D.
TRUCKS	4	%
Total 20-YR ESALs	3,200,000	

INDEX OF SEALS

SHEET NO.	NAME	TYPE
1	JOSHUA J. OPHEIM	STRUCTURAL DESIGN
A.1	BRIAN J. BIRKLAND	ROADWAY DESIGN

STRUCTURAL DESIGN

LICENSED PROFESSIONAL ENGINEER Joshua J. Opheim 20567 IOWA

I hereby certify that this engineering document was prepared by me or under my direct personal supervision and that I am a duly licensed Professional Engineer under the laws of the State of Iowa.

Signature: Joshua J. Opheim — Date: 8-13-2019

Printed or Typed Name: Joshua J. Opheim

My license renewal date is December 31, 2020

Pages or sheets covered by this seal: SHEETS 1 THRU 16

GENERAL NOTES:

THIS DESIGN IS FOR REPAIRS TO THE EXISTING 243'-0 x 55'-0 PRETENSIONED PRESTRESSED CONCRETE BEAM BRIDGE WITH 5'-0 SIDEWALK ON IA 28 OVER WALNUT CREEK IN POLK COUNTY.

ELECTRONIC COPIES OF ORIGINAL DESIGN PLANS AND REPAIR PLANS WILL BE MADE AVAILABLE TO THE CONTRACTOR AS PART OF THE E-FILES SUPPLIED WITH THE CONTRACT DOCUMENTS.

SEE DESIGN SHEET 2 FOR LIST OF REPAIR ITEMS.

FAINT LINES ON PLANS INDICATE THE EXISTING STRUCTURE.

ALL DIMENSIONS AND DETAILS SHOWN ON THESE PLANS PERTINENT TO NEW CONSTRUCTION SHALL BE VERIFIED IN THE FIELD BY THE CONTRACTOR BEFORE STARTING CONSTRUCTION.

THESE BRIDGE PLANS LABEL ALL REINFORCING STEEL WITH ENGLISH NOTATION (5a1 is $\frac{5}{8}$ inch diameter bar). ENGLISH REINFORCING STEEL RECEIVED IN THE FIELD MAY DISPLAY THE FOLLOWING "BAR DESIGNATION". THE "BAR DESIGNATION" IS THE STAMPED IMPRESSION ON THE REINFORCING BARS, AND IS EQUIVALENT TO THE BAR DIAMETER IN MILLIMETERS.

ENGLISH SIZE	3	4	5	6	7	8	9	10	11
BAR DESIGNATION	10	13	16	19	22	25	29	32	36

MINIMUM CLEAR DISTANCE FROM FACE OF CONCRETE TO NEAR REINFORCING BAR IS TO BE 2" UNLESS OTHERWISE NOTED OR SHOWN.

ALL REINFORCING BARS AND BARS NOTED AS DOWELS SUPPLIED FOR THIS STRUCTURE SHALL BE DEFORMED REINFORCEMENT UNLESS OTHERWISE NOTED OR SHOWN.

THE CITY AND UTILITY COMPANIES WHOSE FACILITIES ARE SHOWN ON THE PLANS OR KNOWN TO BE WITHIN THE CONSTRUCTION LIMITS SHALL BE NOTIFIED BY THE BRIDGE CONTRACTOR OF THE STARTING DATE.

NO PRELIMINARY DECK SURVEY IS SHOWN, THE PLAN QUANTITY FOR "CLASS A DECK REPAIR" IS ESTIMATED AS 86.2 SY BASED ON HAND SOUNDING OF THE DECK PLUS 25% INCREASE FOR ESTIMATING PURPOSES. THIS INCLUDES: 62.0 SY AT VARIOUS LOCATIONS ALONG THE NORTHBOUND LANES AND 24.2 SY AT VARIOUS LOCATIONS ALONG THE SOUTHBOUND LANES. THE ACTUAL QUANTITY IS DETERMINED BY THE ENGINEER AT THE TIME OF REPAIR. ACTUAL SPALLED AND HOLLOW AREAS AS DETERMINED BY THE ENGINEER SHALL BE REPAIRED.

PRESENT DECK THICKNESS IS ABOUT $8\frac{1}{2}$ INCHES, INCLUDING EXISTING OVERLAY. THE CONTRACTOR SHALL EXERCISE CARE IN REMOVING CONCRETE IN ORDER TO PREVENT UNNECESSARY UNBONDING OF REINFORCING STEEL.

THE BRIDGE DECK IS COVERED WITH A $1\frac{3}{4}$ INCH THICK PORTLAND CEMENT CONCRETE OVERLAY. THE CONTRACTOR SHALL NOTE THE REDEFINING OF THE CLASSIFICATION LINE (BOUNDARY BETWEEN REPAIR AND OVERLAY) FOR THIS PROJECT DUE TO THE EXISTING $1\frac{3}{4}$ INCH OVERLAY. THE CLASSIFICATION LINE WILL BE DEFINED AS 2 INCHES BELOW THE TOP OF EXISTING OVERLAY. THIS WILL NECESSITATE THE REMOVAL OF THE EXISTING BRIDGE DECK OVERLAY BEFORE PLACING THE PROPOSED NEW BRIDGE DECK OVERLAY.

ALL COSTS ASSOCIATED WITH THE REMOVAL OF THE EXISTING OVERLAY SHALL BE INCLUDED IN THE BID ITEM "REMOVAL OF EXISTING P.C.C. OVERLAY". REMOVAL OF EXISTING OVERLAY SHALL BE COMPUTED IN SQUARE YARDS FROM THE MEASUREMENT OF AREAS REMOVED. THE CONTRACTOR WILL BE PAID THE CONTRACT PRICE PER SQUARE YARD FOR FURNISHING ALL EQUIPMENT AND LABOR NECESSARY TO REMOVE THE CONCRETE TO WITHIN $\frac{1}{4}$ INCH ABOVE THE CLASSIFICATION LINE. ALL COSTS, INCLUDING FURNISHING EQUIPMENT AND LABOR, ASSOCIATED WITH REMOVAL OF THE NEXT $\frac{1}{4}$ INCH OF CONCRETE (TO THE CLASSIFICATION LINE) SHALL BE INCLUDED IN THE BID ITEM "DECK OVERLAY".

UPON COMPLETION OF THE REMOVAL OF CONCRETE DOWN TO THE CLASSIFICATION LINE, THE ENGINEER SHALL DETERMINE THE AREAS OF BRIDGE DECK TO BE REPAIRED AS "DECK REPAIR, CLASS A". ACTUAL HOLLOW AREAS, AS DETERMINED BY THE ENGINEER, SHALL BE REPAIRED.

CONSTRUCTION SHALL BE DONE IN STAGES WITH AT LEAST ONE LANE TRAFFIC MAINTAINED AT ALL TIMES IN ACCORDANCE WITH "TRAFFIC CONTROL PLAN" NOTE.

THE LUMP SUM BID FOR "REMOVALS, AS PER PLAN" SHALL INCLUDE ALL COSTS ASSOCIATED WITH REMOVING THE EXISTING SEPARATION RAIL, PORTIONS OF THE WEST WINGS, AND END POSTS AT THE EAST SIDEWALK. REMOVAL OF SCHEDULED ITEMS SHALL BE IN ACCORDANCE WITH SECTION 2401 OF THE SPECIFICATIONS. ANY DAMAGE TO ANY STEEL OR CONCRETE NOT TO BE REMOVED SHALL BE THE RESPONSIBILITY OF THE CONTRACTOR AND REPAIRED AT NO EXTRA COST TO THE STATE.

whks
engineers + planners + land surveyors

AREAS OF CURB INDICATED ON THE "CURB REPAIR AREA DETAILS SHEET" OR DESIGNATED BY THE ENGINEER ARE TO BE REPAIRED USING CONCRETE REPAIR NOTES AND DETAILS INCLUDED IN THESE PLANS.

SURFACE PREPARATION SHALL BE ACCORDING TO ARTICLE 2413.03, B AND C OF THE STANDARD SPECIFICATIONS. THE CONTRACTOR SHALL ENSURE THE VERTICAL EDGE OF THE STAGE 1 OVERLAY IS PREPARED FOR PLACEMENT OF THE NEW CONCRETE FOR STAGE 2 BY SANDBLASTING OR SHOT BLASTING, FOLLOWED BY AN AIR BLAST. ENSURE THIS CLEANING REMOVES ALL DIRT, OIL, AND OTHER FOREIGN MATERIAL. ENSURE IT REMOVES ALL UNSOUND CONCRETE, LAITANCE, OR LOOSE MATERIAL FROM THE SURFACE AND EDGES AGAINST WHICH THE SURFACE MIXTURE IS TO BE PLACED. THE CLEANING SHOULD ROUGHEN THE SURFACE IN ORDER TO PROVIDE SATISFACTORY BOND WITH THE SURFACING MIXTURE.

THE CONTRACTOR'S ATTENTION IS DIRECTED TO THE EXISTING CONDUIT IN THE WEST CURB AND EAST SIDEWALK/WINGS. IN ORDER TO ENSURE THE EXISTING CONDUITS ARE NOT DAMAGED DURING PLACEMENT OF THE CAST-IN-PLACE BARRIER RAIL, THE CONTRACTOR SHALL BE REQUIRED TO DO THE FOLLOWING:

1. PHYSICALLY LOCATE THE CONDUIT AT APPROXIMATELY 50 FOOT INTERVALS PRIOR TO DRILLING ANY HOLES FOR $\frac{3}{4}$" DIAMETER DOWEL BARS.

2. AFTER COMPLETION OF DRILLING FOR THE $\frac{3}{4}$" DOWEL BARS AND PRIOR TO PLACEMENT OF THE DOWELS, PROVE TO THE INSPECTOR BY A REASONABLE METHOD THE USABILITY OF THE CONDUIT HAS NOT BEEN COMPROMISED.

COST OF THESE OPERATIONS WILL BE CONSIDERED INCIDENTAL TO THE COST OF THE CAST-IN-PLACE BARRIER RAIL. ANY DAMAGE TO THE CONDUIT OR WIRING BY THE CONTRACTOR WILL BE THE RESPONSIBILITY OF THE CONTRACTOR AND REPAIRED AT NO EXTRA COST TO THE STATE.

READY MIX TRUCKS ARE NOT ALLOWED ON THE PREPARED PORTION OF THE BRIDGE DECK.

THE INTERIOR FACES OF THE EXISTING CONCRETE CURBS ARE TO BE CLEANED AND SEALED IN ACCORDANCE WITH ARTICLE 2403.03, P, OF THE STANDARD SPECIFICATIONS. ALL COSTS ASSOCIATED WITH CLEANING AND SEALING OF THE CONCRETE CURBS SHALL BE INCLUDED IN THE UNIT PRICE BID ITEM 'DECK OVERLAY'

THE BID ITEM "REMOVAL OF EXISTING HANDRAIL + END POST" SHALL INCLUDE ALL COSTS ASSOCIATED WITH DISMANTLING THE EXISTING WEST ALUMINUM HANDRAIL (APPROXIMATELY 245.5 L.F. AND 2 END POSTS ON THE WEST CURB). THE HANDRAILS ARE TO BECOME THE PROPERTY OF THE CONTRACTOR.

KEYWAY DIMENSIONS SHOWN ON THE PLANS ARE BASED ON NOMINAL DIMENSIONS UNLESS STATED OTHERWISE. IN ADDITION, THE BEVEL USED ON THE KEYWAY SHALL BE LIMITED TO A MAXIMUM OF 10 DEGREES FROM VERTICAL.

THE BRIDGE CONTRACTOR SHALL DRESS UP THE SLOPES AROUND THE WINGS WHICH ARE DISTURBED DURING CONSTRUCTION. THIS WORK SHALL BE CONSIDERED INCIDENTAL AND NO EXTRA PAYMENT WILL BE MADE.

A SCRAPE SAMPLE WAS TAKEN FROM THE EXISTING DECK DRAINS TO GET AN INDICATION OF THE EXISTENCE OF AND LEVEL OF TOTAL LEAD AND TOTAL CHROMIUM. ANALYSIS OF TOTAL LEAD ON THIS SAMPLE WAS 170,000 PARTS PER MILLION (PPM). ANALYSIS OF TOTAL CHROMIUM ON THIS SAMPLE WAS 3100 PPM. THESE ANALYSES SHOW THE EXISTENCE OF THESE TWO TOXIC CONSTITUENTS. LEVELS INDICATED BY THESE TESTS COULD CREATE CONDITIONS ABOVE REGULATORY LIMITS FOR HEALTH AND SAFETY REQUIREMENTS. NO OTHER CONSTITUENTS WERE ANALYZED. THE BIDDER SHOULD NOT RELY ON THE IOWA DOT $\frac{5}{32}$S TESTING AND ANALYSIS FOR ANY PURPOSE OTHER THAN AS AN INDICATION OF THE EXISTENCE OF THESE TWO TOXIC CONSTITUENTS.

SPECIFICATIONS:

DESIGN: AASHTO SERIES 2002.

CONSTRUCTION: IOWA DEPARTMENT OF TRANSPORTATION STANDARD SPECIFICATIONS FOR HIGHWAY AND BRIDGE CONSTRUCTION, SERIES 2015, PLUS APPLICABLE GENERAL SUPPLEMENTAL SPECIFICATIONS, DEVELOPMENTAL SPECIFICATIONS, SUPPLEMENTAL SPECIFICATIONS AND SPECIAL PROVISIONS SHALL APPLY TO CONSTRUCTION WORK ON THIS PROJECT.

DESIGN STRESSES:

DESIGN STRESSES FOR THE FOLLOWING MATERIALS ARE IN ACCORDANCE WITH THE AASHTO STANDARD SPECIFICATIONS FOR HIGHWAY BRIDGES, SERIES 2002.

REINFORCING STEEL IN ACCORDANCE WITH SECTION 8, GRADE 60.
CONCRETE IN ACCORDANCE WITH SECTION 8, f'c = 4.0 KSI.
STRUCTURAL STEEL IN ACCORDANCE WITH SECTION 10, ASTM A709 GRADE 36 OR GRADE 50 (AASHTO M270 GRADE 36 OR GRADE 50).

ESTIMATED BRIDGE QUANTITIES

ITEM NO.	ITEM CODE	ITEM	UNIT	TOTAL	AS BUILT QUANTITY
1	2401-6745636	REMOVAL OF EXISTING HANDRAIL AND END POSTS	LS	1.00	
2	2401-6750001	REMOVALS, AS PER PLAN	LS	1.00	
3	2402-2720000	EXCAVATION, CLASS 20	CY	15	
4	2403-0100000	STRUCTURAL CONCRETE (MISCELLANEOUS)	CY	2.8	
5	2404-7775005	REINFORCING STEEL, EPOXY COATED	LB	8325	
6	2413-0698074	DECK REPAIR, CLASS A	SY	107.8	
7	2414-6425410	CONCRETE BARRIER, REINFORCED, SEPARATION	LF	256.2	
8	2414-6425420	CONCRETE BARRIER, PARAPET	LF	260.0	
9	2414-6444100	STEEL PIPE PEDESTRIAN HAND RAILING	LF	278	
10	2426-6772016	CONCRETE REPAIR	SF	220	
11	2499-2300026	DRAIN EXTENSIONS	EACH	18	
12	2507-2638650	BRIDGE WING ARMORING - EROSION STONE	SY	17.1	
13	2510-6745640	REMOVAL OF EXISTING P.C. OVERLAY	SY	1504.0	
14	2533-4980005	MOBILIZATION	LS	1.00	
15	2599-9999005	CONCRETE BARRIER END SECTION	EACH	4	
16	2599-9999009	PEDESTRIAN RAIL MODIFICATION	LF	246.0	
		ALTERNATE AA OPTION 1			
17	2413-0698066	DECK OVERLAY (CLASS O PCC)	SY	1504.0	
		ALTERNATE AA OPTION 2			
18	2413-0698067	DECK OVERLAY (CLASS HPC-O PCC)	SY	1504.0	

ESTIMATE REFERENCE INFORMATION:

ITEM NO.	DESCRIPTION
2	REMOVAL OF SCHEDULED ITEMS SHALL BE IN ACCORDANCE WITH SECTION 2401, OF THE STANDARD SPECIFICATIONS. ANY DAMAGE TO MATERIAL NOT TO BE REMOVED SHALL BE THE RESPONSIBILITY OF THE CONTRACTOR AND REPAIRED AT NO EXTRA COST TO THE STATE.
8	INCLUDES 534 LBS. OF GALVANIZED STRUCTURAL STEEL AND ANCHORS FOR JUNCTION BOX COVER PLATES. INCLUDES THE COST OF LOCATING AND VERIFYING USABILITY OF EXISTING CONDUIT IN THE BRIDGE CURB.
12	INCLUDES FURNISHING AND PLACING ENGINEERING FABRIC, EROSION STONE, AND ALL REQUIRED EXCAVATING, SHAPING AND COMPACTING FOR WING ARMORING.
15	EACH CONCRETE BARRIER END SECTION WILL BE PAID AT THE CONTRACT UNIT PRICE. MEASUREMENT WILL BE BASED ON PLAN QUANTITY. PAYMENT SHALL INCLUDE ALL MATERIAL AND LABOR, EXCEPT REINFORCING STEEL, REQUIRED FOR INSTALLATION AS PER PLAN.
16	PEDESTRIAN RAIL MODIFICATION WILL BE MEASURED END TO END OF RAIL BASED ON PLAN QUANTITY. PAYMENT PER LINEAR FOOT SHALL INCLUDE ALL MATERIAL AND LABOR, INCLUDING FIELD VERIFICATION OF DIMENSIONS, TO FABRICATE AND FIELD INSTALL THE RAIL AS PER PLAN.
17 & 18	INCLUDES CLEANING EXISTING CURBS AND FURNISHING AND PLACING CONCRETE SEALER.

ROADWAY QUANTITIES SHOWN ELSEWHERE IN THESE PLANS.

TRAFFIC CONTROL PLAN:
THE ROADWAY WILL BE OPEN TO TRAFFIC DURING CONSTRUCTION. REFER TO THE TRAFFIC CONTROL PLAN SHOWN ELSEWHERE IN THESE PLANS.

SHOP DRAWING SUBMITTALS

SHOP DRAWINGS SHALL BE SUBMITTED FOR THE FOLLOWING ITEMS SHOWN IN THE TABLE BELOW. (NOTE ADDITIONAL SHOP DRAWINGS MAY BE REQUIRED IN ACCORDANCE WITH ARTICLE 1105.03 OF THE STANDARD SPECIFICATIONS.)

SUBMITTAL REQUIREMENTS FOR SHOP DRAWINGS SHOULD BE IN ACCORDANCE WITH ARTICLE 1105.03, OF THE STANDARD SPECIFICATIONS, FOR HIGHWAY AND BRIDGE CONSTRUCTION OF THE IOWA DEPARTMENT OF TRANSPORTATION.

SHOP DRAWINGS SHALL BE SUBMITTED WITH THE FOLLOWING NAMING CONVENTION:
(Paren)_County_DesignNumber_SubmittalDescription.pdf
Example: (090)_Blackhawk_Design915_DeckDrains.pdf

1	PEDESTRIAN RAIL MODIFICATIONS
2	DRAIN EXTENSIONS
3	STEEL PIPE PEDESTRIAN HAND RAIL

DESIGN HISTORY AT THIS SITE

DES. NO.	TYPE OF WORK
-	ORIGINAL DESIGN
3482	DECK OVERLAY
420	RE-OVERLAY

DESIGN FOR REPAIRS TO 15° SKEW

243'-0 x 55'-0 PRETENSIONED PRESTRESSED CONCRETE BEAM BRIDGE

80'-9 END SPANS 81'-6 INTERIOR SPAN

GENERAL NOTES AND QUANTITIES

STA. 36+02.00 (IA. 28) SEPTEMBER, 2019

POLK COUNTY

IOWA DEPARTMENT OF TRANSPORTATION - HIGHWAY DIVISION

DESIGN SHEET NO. 1 OF 15 FILE NO. 31486 DESIGN NO. 420

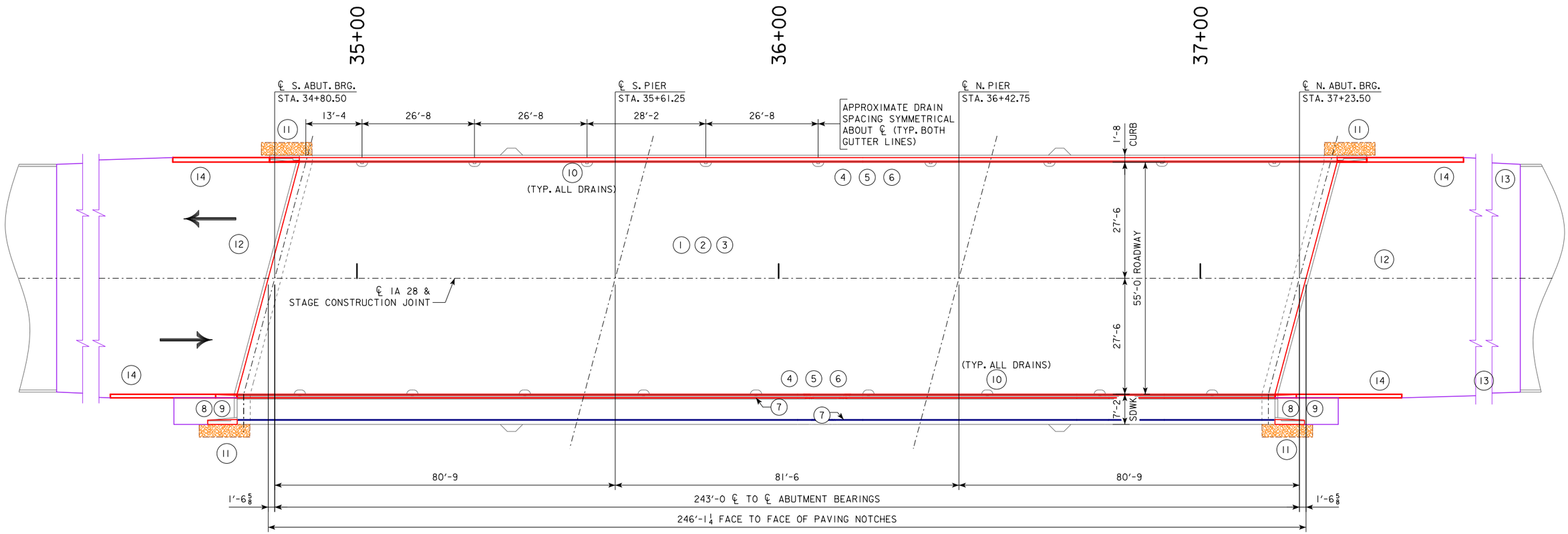

SITUATION PLAN

REPAIRS SHALL CONSIST OF:

1. REMOVAL OF EXISTING OVERLAY.
2. DECK REPAIR, CLASS A.
3. BRIDGE DECK RE-OVERLAY.
4. PERFORM CONCRETE REPAIR.
5. CLEAN AND SEAL CONCRETE CURBS.
6. REMOVE EXISTING RAIL AND INSTALL RETROFIT CONCRETE BARRIER RAIL.
7. MODIFY EXTERIOR SIDEWALK RAIL AND INSTALL STEEL PIPE PEDESTRIAN HAND RAIL.
8. REMOVE AND REPLACE END POSTS.
9. INSTALL SIDEWALK APPROACH PANELS.
10. REMOVE PORTION OF DECK DRAINS AND INSTALL DRAIN EXTENSIONS.
11. INSTALL WING ARMORING.
12. REMOVE AND REPLACE APPROACH.
13. INSTALL NEW INTAKES.
14. INSTALL TAPERED APPROACH BARRIERS.

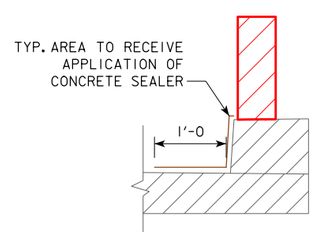

DETAIL OF CONCRETE SEALER AREA
(WEST RAIL SHOWN, EAST RAIL SIMILAR)

LOCATION:

IA. 28 OVER WALNUT CREEK
T-78N, R-25W
SECTION 2
DES MOINES TOWNSHIP
POLK COUNTY
CITY OF DES MOINES / WEST DES MOINES
MAINT. NO. 7717.8S028
FHWA NO. 3826
LATITUDE 41.586813
LONGITUDE -93.703431

TRAFFIC ESTIMATE

2018 AADT	27,500	V.P.D.
TRUCKS	4	%
TOTAL 20-YR ESALs	3,200,000	

DESIGN FOR REPAIRS TO 15° SKEW

243'-0 x 55'-0 PRETENSIONED PRESTRESSED CONCRETE BEAM BRIDGE

80'-9 END SPANS 81'-6 INTERIOR SPAN

SITUATION PLAN

STA. 36+02.00 (IA. 28) SEPTEMBER, 2019

POLK COUNTY

IOWA DEPARTMENT OF TRANSPORTATION - HIGHWAY DIVISION

DESIGN SHEET NO. 2 OF 15 FILE NO. 31486 DESIGN NO. 420

whks engineers + planners + land surveyors

DESIGN TEAM JO/JK/TA	POLK COUNTY	PROJECT NUMBER BRFN-028-2(44)--39-77	SHEET NUMBER 3

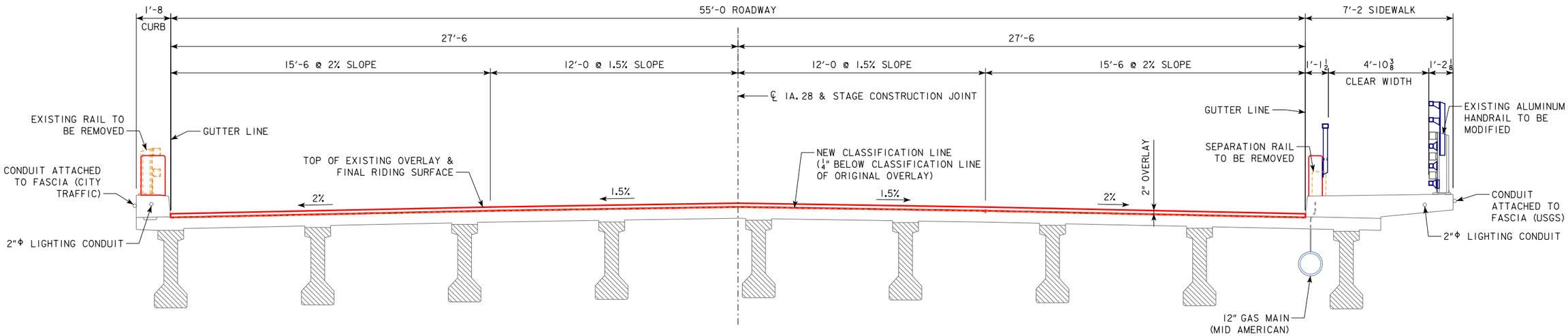

TYPICAL SECTION

(LOOKING NORTH)

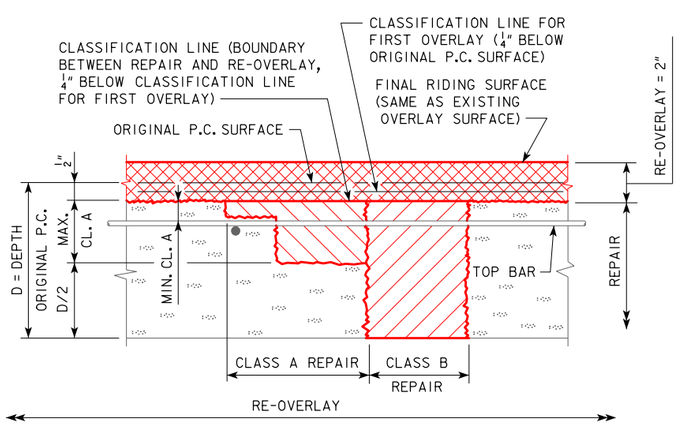

REPAIR AND RE-OVERLAY DEFINITION

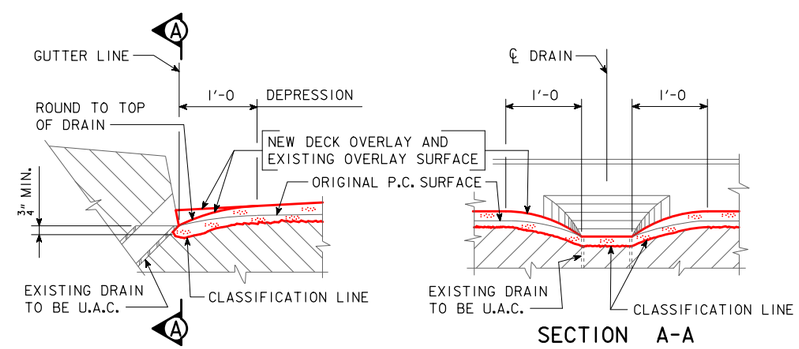

DECK REPAIR DETAIL AT DRAIN (EAST CURB)

(REQUIRED AT 9 LOCATIONS)

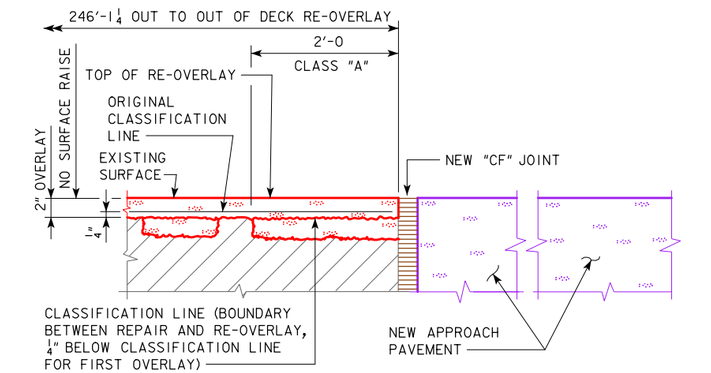

PART LONGITUDINAL SECTION ALONG ROADWAY

BOTH ABUTMENTS

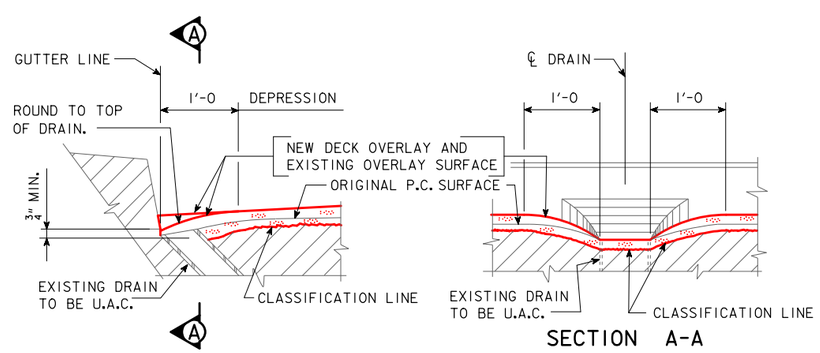

DECK REPAIR DETAIL AT DRAIN (WEST CURB)

(REQUIRED AT 9 LOCATIONS)

NOTE:
THE 2'-0 CLASS "A" REPAIR AREA SHOWN AT THE JOINT SHALL BE REMOVED TO A MINIMUM DEPTH 1 INCH BELOW THE EXISTING TOP MAT OF REINFORCING. THE EXISTING BRIDGE DECK REINFORCING BARS SHALL BE CAREFULLY EXPOSED AND INCORPORATED INTO THE NEW CONSTRUCTION WORK.

whks
engineers + planners + land surveyors

DESIGN FOR REPAIRS TO 15° SKEW

243'-0 x 55'-0 PRETENSIONED PRESTRESSED CONCRETE BEAM BRIDGE

80'-9 END SPANS 81'-6 INTERIOR SPAN

DECK REPAIR DETAILS

STA. 36+02.00 (IA. 28) SEPTEMBER, 2019

POLK COUNTY

IOWA DEPARTMENT OF TRANSPORTATION - HIGHWAY DIVISION

DESIGN SHEET NO. 3 OF 15 FILE NO. 31486 DESIGN NO. 420

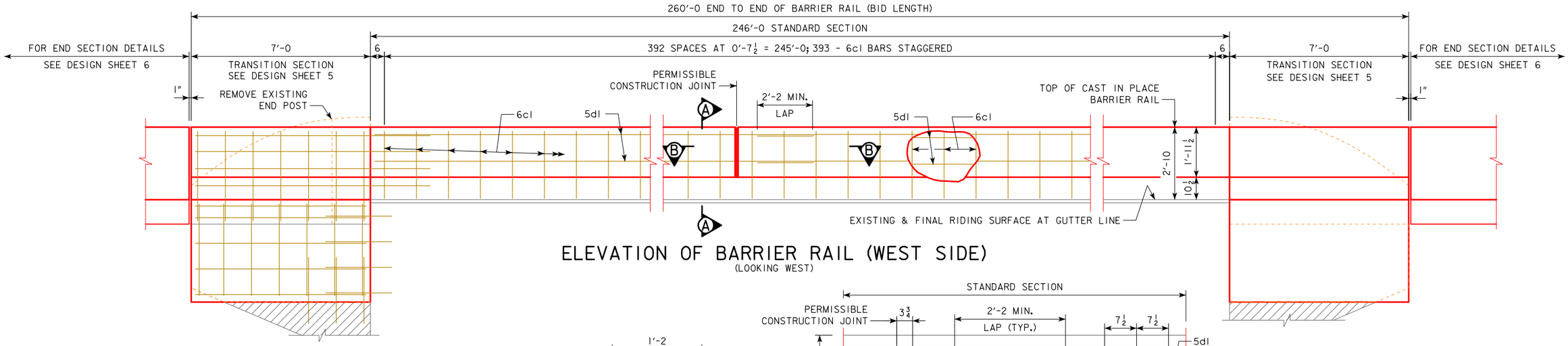

ELEVATION OF BARRIER RAIL (WEST SIDE)

(LOOKING WEST)

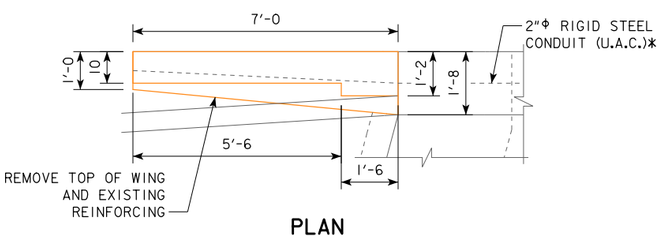

PLAN

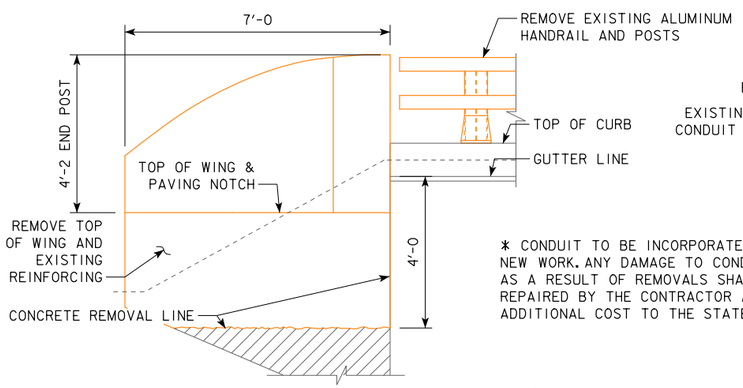

ELEVATION

REMOVAL DETAILS

(WEST SIDE ONLY, TYP. BOTH END SECTIONS)

* CONDUIT TO BE INCORPORATED INTO NEW WORK. ANY DAMAGE TO CONDUIT AS A RESULT OF REMOVALS SHALL BE REPAIRED BY THE CONTRACTOR AT NO ADDITIONAL COST TO THE STATE.

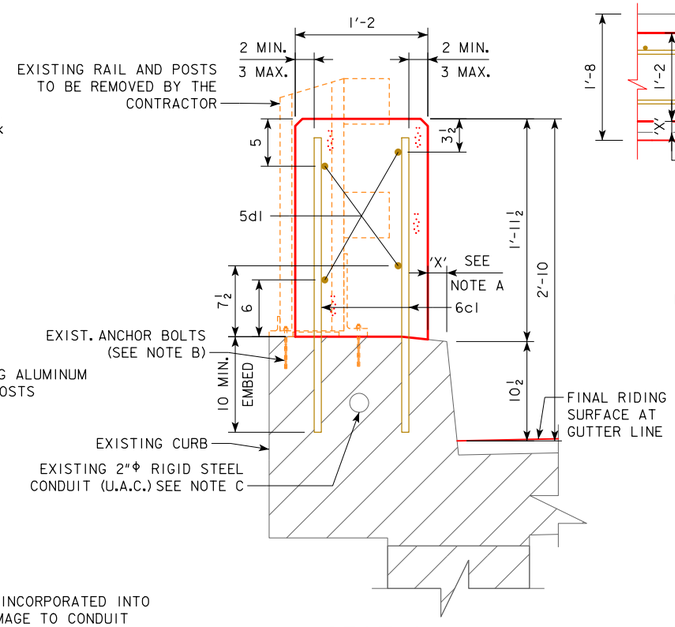

SECTION A-A

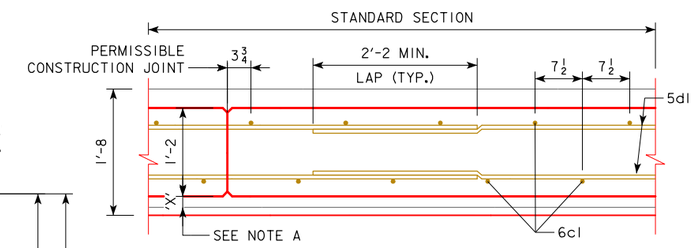

SECTION B-B

NOTE:
SEE DESIGN SHEET 7 FOR BARRIER RAILING NOTES.

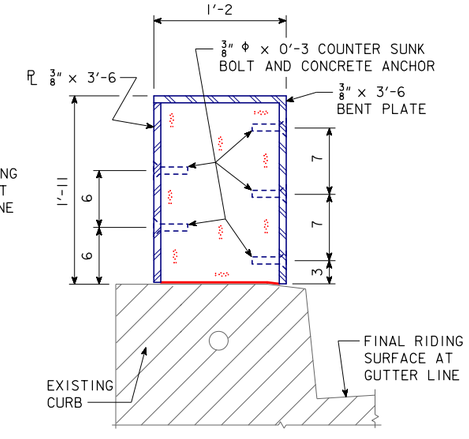

SECTION E-E

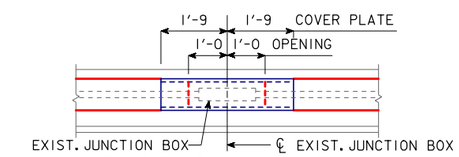

PART PLAN VIEW

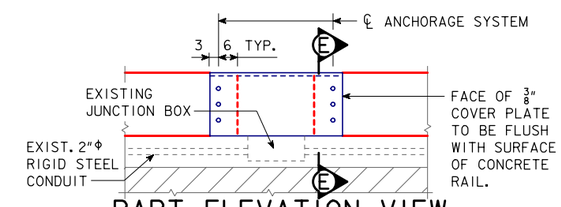

PART ELEVATION VIEW

THE RETROFIT RAIL SHALL BE GAPPED AT EXISTING JUNCTION BOXES AS DETAILED. THE VERTICAL BARS SHALL BE SHIFTED AS REQUIRED AND THE LONGITUDINAL BARS SHALL BE FIELD CUT AS REQUIRED. CUT ENDS OF LONGITUDINAL BARS SHALL BE PATCHED WITH EPOXY. A ⅜" GALVANIZED PLATE SHALL FIT OVER THE GAPPED AREA IN THE RAIL AND SHALL BE HELD IN PLACE WITH COUNTERSUNK BOLTS AND CONCRETE ANCHORS. THE COST OF THE GALVANIZED PLATES AND ANCHORAGE SYSTEM SHALL BE INCIDENTAL TO THE COST OF THE RETROFIT RAIL.

REQUIRED AT TWO EXISTING JUNCTION BOXES.

NOTE A:
ON WEST RAIL OF BRIDGE, DIMENSION "X" SHALL BE A MINIMUM OF 1" AND A MAXIMUM OF 3", BUT MUST BE CONSTANT FOR FULL LENGTH OF BRIDGE, HOWEVER APPROXIMATELY 10 LINEAR FEET AT EITHER END OF STANDARD RAIL SECTION SHALL BE TRANSITIONED TO 1¾" AT END SECTION AS SHOWN.

NOTE B:
EXISTING RAIL IS TO BE REMOVED. ANY ANCHOR BOLTS THAT WILL HAVE AT LEAST 2" OF CONCRETE COVER WHEN ENCOMPASSED BY THE NEW BARRIER RAIL MAY BE LEFT IN PLACE AT THE CONTRACTORS OPTION SUBJECT TO THE APPROVAL OF THE ENGINEER. ANY ANCHOR BOLTS NOT HAVING THE 2" MIN. COVER SHALL BE CUT OFF FLUSH WITH OR SLIGHTLY BELOW THE TOP OF CURB AND ENDS OF NON STAINLESS STEEL BOLTS PAINTED WITH TWO COATS OF ZINC RICH PAINT.
STAINLESS STEEL ANCHOR BOLTS OUTSIDE THE AREA OF NEW BARRIER RAIL MAY BE LEFT IN PLACE AT CONTRACTORS OPTION SUBJECT TO APPROVAL OF THE ENGINEER. STAINLESS STEEL BOLTS NEED NOT BE PAINTED.

NOTE C:
THE CONTRACTOR'S ATTENTION IS DIRECTED TO THE EXISTING CONDUIT IN THE BRIDGE CURBS. IN ORDER TO ENSURE THE EXISTING CONDUITS AND/OR ELECTRICAL SERVICE (IF PRESENT) ARE NOT DAMAGED DURING PLACEMENT OF THE CONCRETE BARRIER RAILING, THE CONTRACTOR SHALL BE REQUIRED TO DO THE FOLLOWING:

1. PHYSICALLY LOCATE THE CONDUIT AT APPROXIMATELY 50 FOOT INTERVALS PRIOR TO DRILLING ANY HOLES FOR ¾" DIAMETER DOWEL BARS.
2. AFTER COMPLETION OF DRILLING FOR THE ¾" DOWEL BARS AND PRIOR TO PLACEMENT OF THE DOWELS, PROVE TO THE INSPECTOR BY A REASONABLE METHOD THE USABILITY OF THE CONDUIT HAS NOT BEEN COMPROMISED.

COST OF THESE OPERATIONS WILL BE CONSIDERED INCIDENTAL TO THE COST OF THE RETROFIT CONCRETE BARRIER RAILING. ANY DAMAGE TO THE CONDUIT OR WIRING BY THE CONTRACTOR WILL BE THE RESPONSIBILITY OF THE CONTRACTOR AND REPAIRED AT NO EXTRA COST TO THE STATE.

whks
engineers + planners + land surveyors

DESIGN FOR REPAIRS TO 15° SKEW

243'-0 x 55'-0 PRETENSIONED PRESTRESSED CONCRETE BEAM BRIDGE

80'-9 END SPANS — 81'-6 INTERIOR SPAN

WEST RAIL DETAILS

STA. 36+02.00 (IA. 28) — SEPTEMBER, 2019

POLK COUNTY

IOWA DEPARTMENT OF TRANSPORTATION - HIGHWAY DIVISION

DESIGN SHEET NO. 4 OF 15 FILE NO. 31486 DESIGN NO. 420

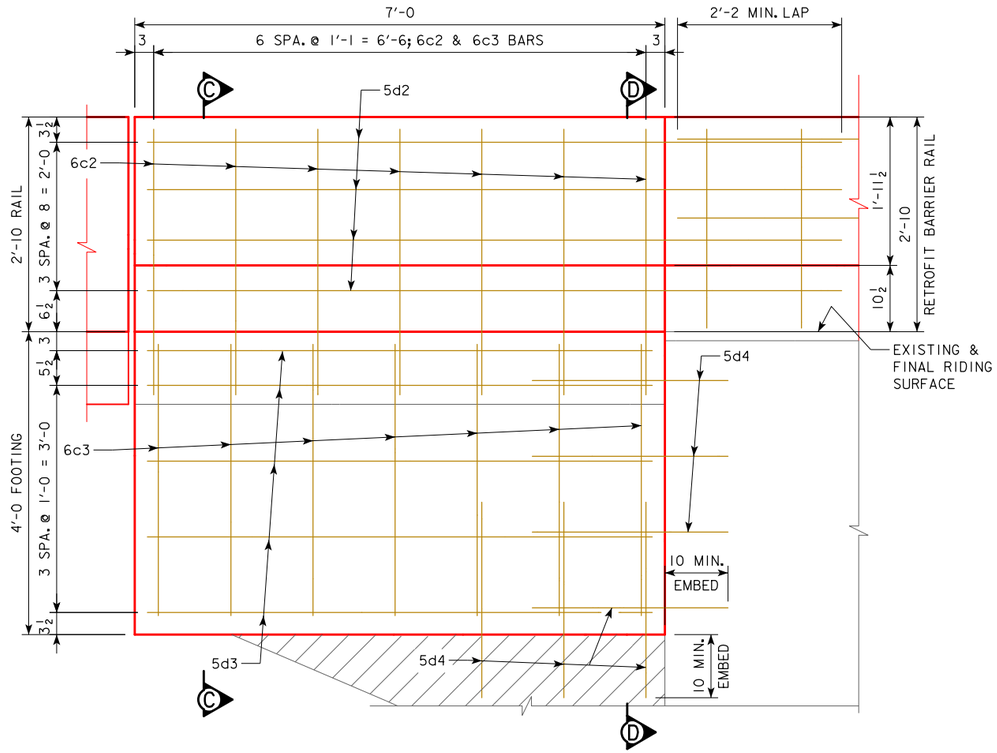

WEST RAIL TRANSITION SECTION & FOOTING ELEVATION
(SW RAIL SHOWN, NW RAIL SIMILAR)

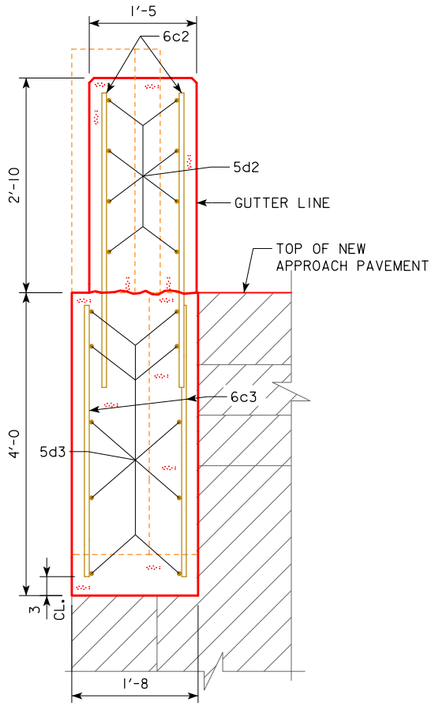

SECTION C-C

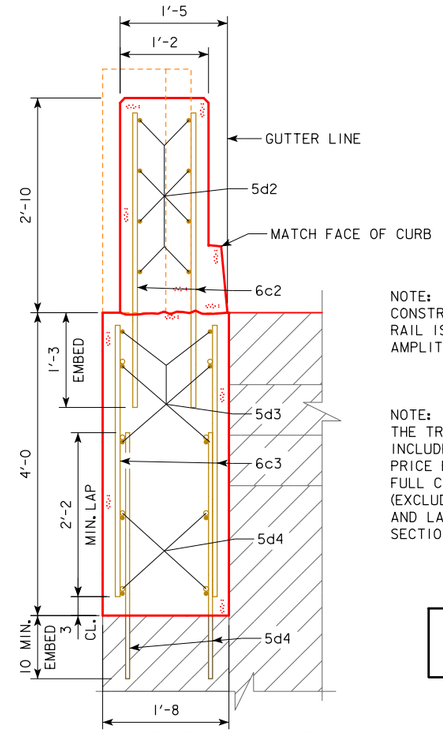

SECTION D-D

NOTE:
CONSTRUCTION JOINT BETWEEN FOOTING AND RAIL IS ROUGHENED CONCRETE (¼" MIN. AMPLITUDE, CLEAN AND FREE OF LAITANCE).

NOTE:
THE TRANSITION SECTIONS AND FOOTINGS ARE TO BE INCLUDED IN THE BID FOR "CONCRETE BARRIER, PARAPET". PRICE BID FOR "CONCRETE BARRIER, PARAPET" SHALL BE FULL COMPENSATION FOR FURNISHING ALL MATERIAL (EXCLUDING REINFORCING STEEL), CONCRETE, EQUIPMENT, AND LABOR REQUIRED TO CONSTRUCT THE TRANSITION SECTIONS.

NOTE:
SEE DESIGN SHEET 7 FOR BARRIER RAILING NOTES.

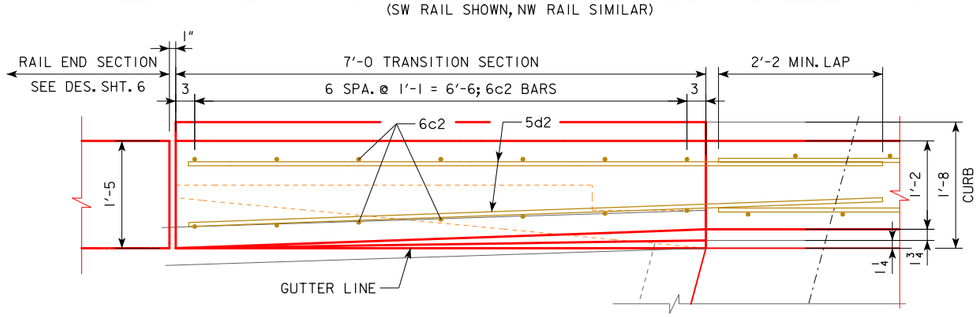

TRANSITION SECTION PLAN

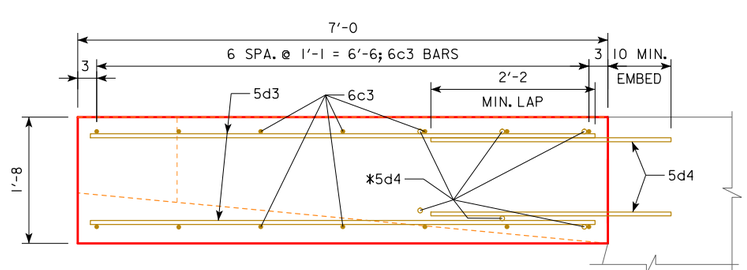

FOOTING PLAN

* - MAINTAIN 2" MIN. CLEAR BETWEEN 5d4 DOWELS AND EDGE OF EXISTING WING

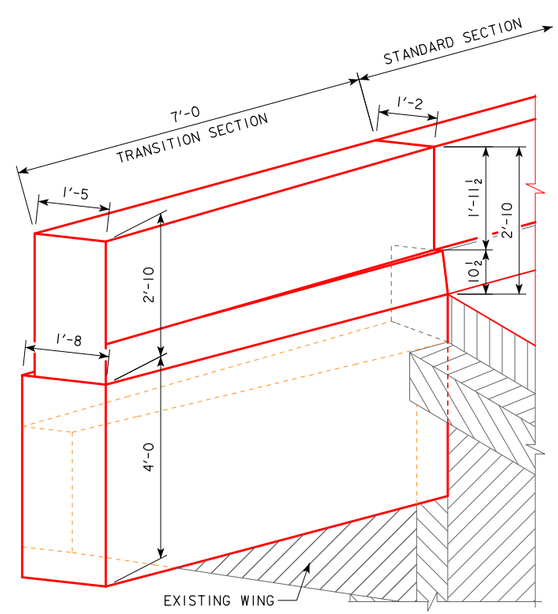

END SECTION TRANSITION & FOOTING
(EXISTING END POST REMOVAL NOT SHOWN)

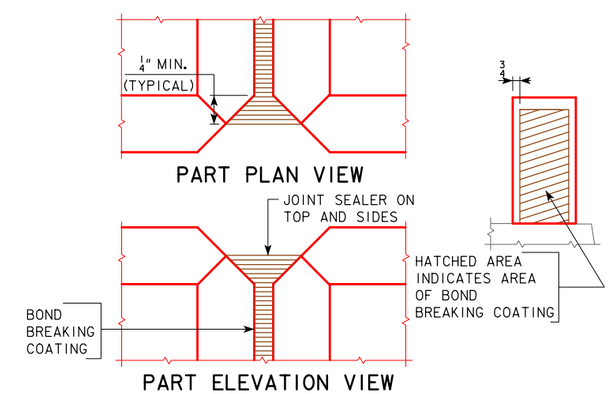

BARRIER RAIL JOINT DETAILS

DESIGN FOR REPAIRS TO 15° SKEW

243'-0 x 55'-0 PRETENSIONED PRESTRESSED CONCRETE BEAM BRIDGE

80'-9 END SPANS 81'-6 INTERIOR SPAN

WEST RAIL DETAILS

STA. 36+02.00 (IA. 28) SEPTEMBER, 2019

POLK COUNTY

IOWA DEPARTMENT OF TRANSPORTATION - HIGHWAY DIVISION

DESIGN SHEET NO. 5 OF 15 FILE NO. 31486 DESIGN NO. 420

whks engineers + planners + land surveyors

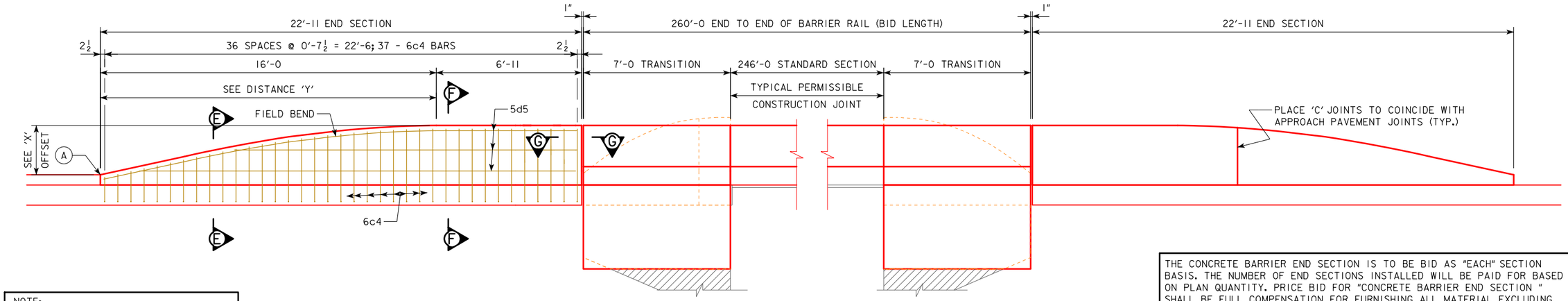

NOTE:
VERTICAL AND HORIZONTAL BARS FOR END SECTION TO BE FIELD CUT TO FIT.

THE CONCRETE BARRIER END SECTION IS TO BE BID AS "EACH" SECTION BASIS. THE NUMBER OF END SECTIONS INSTALLED WILL BE PAID FOR BASED ON PLAN QUANTITY. PRICE BID FOR "CONCRETE BARRIER END SECTION " SHALL BE FULL COMPENSATION FOR FURNISHING ALL MATERIAL EXCLUDING EPOXY COATED REINFORCING, CONCRETE, EQUIPMENT, AND LABOR REQUIRED TO CONSTRUCT THE END SECTIONS.

ELEVATION OF WEST BARRIER RAIL END SECTIONS

(LOOKING WEST)

OFFSETS FOR ROUNDED BARRIER TOP

NORTH END SIMILAR

'Y' = DISTANCE FROM (A)	1'-0	2'-0	3'-0	4'-0	5'-0	6'-0	7'-0	8'-0	9'-0	10'-0	11'-0	12'-0	13'-0	14'-0	15'-0	16'-0
'X' = OFFSET TO ROUNDED TOP	2.13	1.91	1.70	1.48	1.26	1.06	0.87	0.70	0.54	0.42	0.30	0.20	0.12	0.06	0.02	0.00

NOTE:
SEE DESIGN SHEET 7 FOR BARRIER RAILING NOTES.

SEE ROADWAY SHEETS IN THESE PLANS FOR APPROACH PAVEMENT DETAILS.

EPOXY COATED REINFORCING STEEL

BAR	LOCATION	SHAPE	NO.	LENGTH	WEIGHT
6c1	VERTICAL. STANDARD SECTION, DOWEL	—	393	2'-7	1,525
6c2	VERTICAL, TRANSITION SECTION	—	28	3'-11	165
6c3	VERTICAL, TRANSITION SECTION FOOTING	—	28	3'-7	151
6c4	VERTICAL, END SECTION	L	74	4'-4	482
5d1	HORIZONTAL, STANDARD SECTION	—	28	37'-0	1,081
5d2	HORIZONTAL, TRANSITION SECTION	—	16	9'-2	153
5d3	HORIZONTAL, TRANSITION SECTION FTG.	—	20	6'-8	139
5d4	TRANSITION SECTION FTG. DOWEL	—	28	3'-3	95
5d5	HORIZONTAL, END SECTION	—	12	22'-7	283
				TOTAL (LBS)	4,074

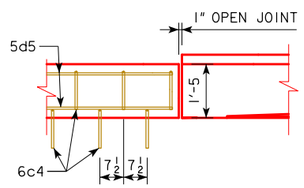

SECTION G-G

DOWEL SETTING NOTE :

THE 6c1 & 5d4 BARS SHALL BE SET AS DOWELS IN DRILLED HOLES. HOLES ARE TO BE 10" DEEP. THE DOWELS SHALL BE INSTALLED IN ACCORDANCE WITH THE MANUFACTURER'S RECOMMENDATIONS. EITHER OF THE FOLLOWING SYSTEMS MAY BE USED AS A BONDING AGENT FOR VERTICAL DOWELS, BUT ONLY SYSTEM "A" MAY BE USED FOR HORIZONTAL DOWELS:

A. POLYMER GROUT SYSTEM SHALL BE IN ACCORDANCE WITH ARTICLE 2301.03, E, OF THE STANDARD SPECIFICATIONS.
B. HYDRAULIC CEMENT GROUT SYSTEMS. DRILLED HOLES ARE TO BE 2½ TIMES THE DOWEL DIAMETER AND ARE TO BE BLOWN CLEAN WITH COMPRESSED AIR IMMEDIATELY PRIOR TO PLACING GROUT. THE HYDRAULIC CEMENT GROUT SHALL BE ONE OF THOSE APPROVED IN MATERIALS I.M. 491.13 AND SHALL BE USED IN ACCORDANCE WITH THE MANUFACTURER'S RECOMMENDATIONS.

THE PRICE BID FOR 'CONCRETE BARRIER, PARAPET" SHALL INCLUDE ALL COSTS OF SETTING BARS AS DOWELS IN EXISTING CONCRETE.

CONCRETE PLACEMENT QUANTITY

LOCATION	TOTAL
STANDARD SECTION, 246 LF @ 0.084 CY/FT	20.7
END SECTIONS, 2 @ 2.7 CY EA.	5.4
TRANSITION SECTIONS, 2 @ 0.97 EA.	1.9
TRANSITION SECTION FOOTINGS, 2 @ 1.73 CY EA.	3.5
(FOR INFORMATION ONLY) TOTAL (CU. YDS.)	31.5

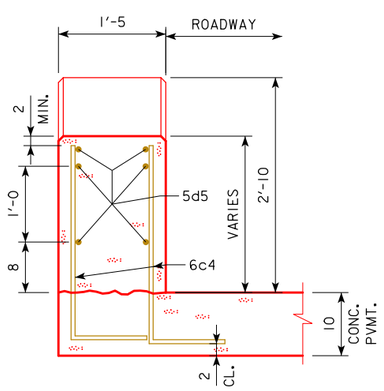

SECTION E-E

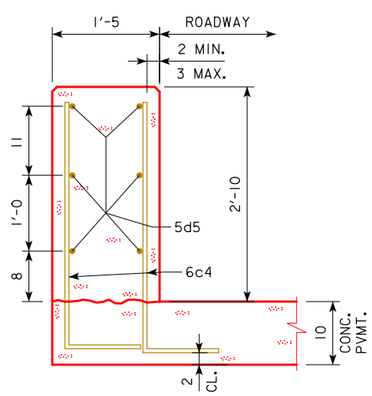

SECTION F-F

NOTE:
CONSTRUCTION JOINT BETWEEN RAIL AND APPROACH PAVEMENT IS TO BE ROUGHENED TO ¼" MIN. AMPLITUDE, CLEANED, AND FREE OF LAITANCE.

BENT BAR DETAILS

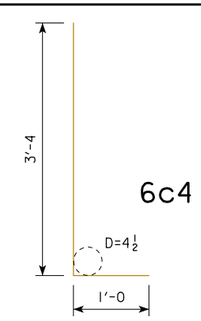

NOTE:
ALL DIMENSIONS ARE OUT TO OUT.
D = PIN DIA

BARRIER RAIL QUANTITY

LOCATION	UNITS	QUANTITY
CONCRETE BARRIER, PARAPET	LF	260.0

whks
engineers + planners + land surveyors

DESIGN FOR REPAIRS TO 15° SKEW

243'-0 x 55'-0 PRETENSIONED PRESTRESSED CONCRETE BEAM BRIDGE

80'-9 END SPANS 81'-6 INTERIOR SPAN

WEST RAIL DETAILS

STA. 36+02.00 (IA. 28) SEPTEMBER, 2019

POLK COUNTY

IOWA DEPARTMENT OF TRANSPORTATION - HIGHWAY DIVISION

DESIGN SHEET NO. 6 OF 15 FILE NO. 31486 DESIGN NO. 420

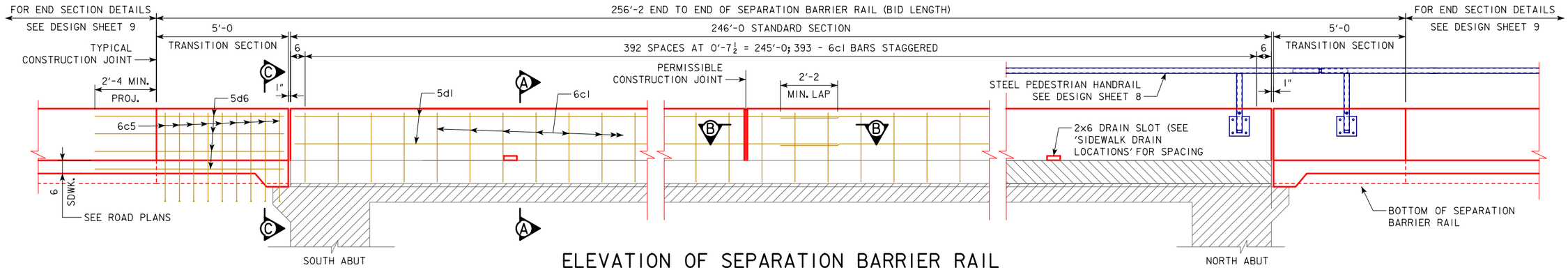

ELEVATION OF SEPARATION BARRIER RAIL

(LOOKING WEST - SIDEWALK SIDE)

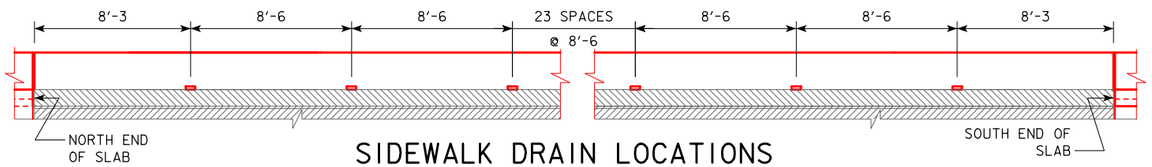

SIDEWALK DRAIN LOCATIONS

NOTE; DECK DRAIN SLOTS SHALL NOT USE PVC OR OTHER STAY-IN-PLACE FORMWORK

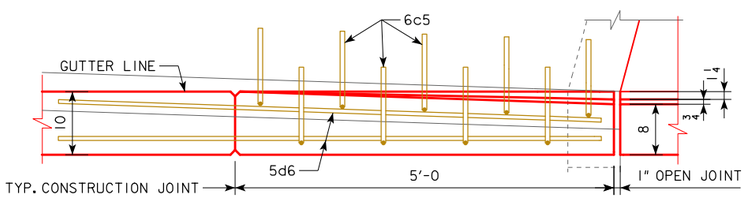

TRANSITION SECTION PLAN

NOTE:
CONSTRUCTION JOINT BETWEEN RAIL AND APPROACH PAVEMENT IS TO BE ROUGHENED TO ¼" MIN. AMPLITUDE, CLEANED, AND FREE OF LAITANCE.

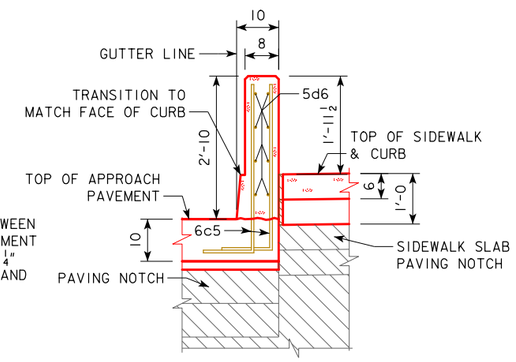

SECTION C-C

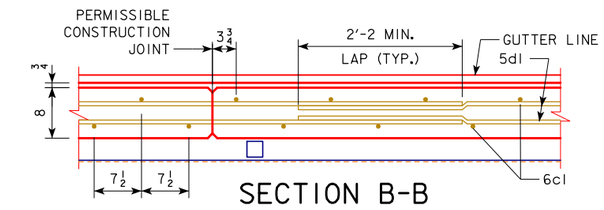

SECTION B-B

BARRIER RAIL NOTES

MINIMUM CLEAR DISTANCE FROM FACE OF CONCRETE TO NEAR REINFORCING BAR IS TO BE 2" UNLESS OTHERWISE NOTED OR SHOWN.

THE PERMISSIBLE CONSTRUCTION JOINTS ARE TO BE PLACED BETWEEN VERTICAL BARS AT A MINIMUM SPACING OF 20 FEET AND SHALL BE SPACED A MINIMUM OF 1 FOOT FROM ℄ OF ANY HANDRAIL POST. CONSTRUCTION JOINT CONTACT SURFACES ARE ARE TO BE COATED WITH AN APPROVED BOND BREAKER.

COST OF THE JOINT SEALER AND BOND BREAKER SHALL BE CONSIDERED INCIDENTAL TO OTHER CONSTRUCTION..

ALL BARRIER RAIL CONCRETE IS TO BE EITHER CLASS BR MIX OR CLASS C MIX.

CLASS BR CONCRETE SHALL BE USED FOR THE SLIP FORM METHOD.

CLASS C CONCRETE SHALL BE USED FOR THE CAST-IN-PLACE METHOD. THE PRICE BID FOR THE CAST-IN-PLACE METHOD SHALL INCLUDE THE FORMWORK.

ALL REINFORCING STEEL IS TO BE GRADE 60 AND EPOXY COATED.

THE BARRIER RAIL IS TO BE BID ON A LINEAL FOOT BASIS MEASURED FROM END TO END OF RAIL. THE NUMBER OF LINEAL FEET OF BARRIER RAIL INSTALLED WILL BE PAID FOR AT THE CONTRACT PRICE PER LINEAL FOOT BASED ON PLAN QUANTITIES. PRICE BID FOR CONCRETE BARRIER RAILING SHALL BE FULL COMPENSATION FOR FURNISHING ALL MATERIAL (EXCLUDING REINFORCING STEEL) AND ALL OF THE EQUIPMENT AND LABOR REQUIRED TO ERECT THE RAIL IN ACCORDANCE WITH THESE PLANS AND CURRENT SPECIFICATIONS.

THE JOINT SEALER SHALL BE LIGHT GRAY NONSAG LATEX CAULKING SEALER MARKETED FOR OUTDOOR USE. NO TESTING OR CERTIFICATION IS REQUIRED.

TOP OF THE BARRIER RAIL IS TO BE PARALLEL TO THE THEORETICAL ℄ GRADE.

EXISTING BRIDGE RAIL IS NOT TO BE REMOVED UNTIL AUTHORIZED BY THE ENGINEER.

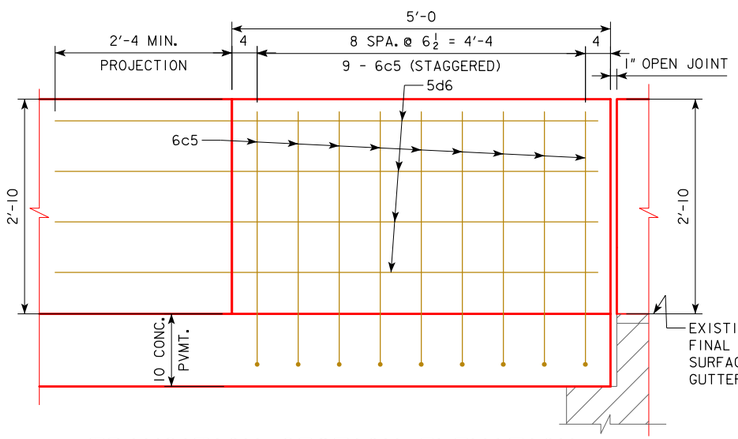

TRANSITION SECTION ELEVATION

(TRAFFIC FACE SHOWN)

NOTE:
SEE DESIGN SHEET 5 FOR BARRIER RAIL JOINT DETAILS.

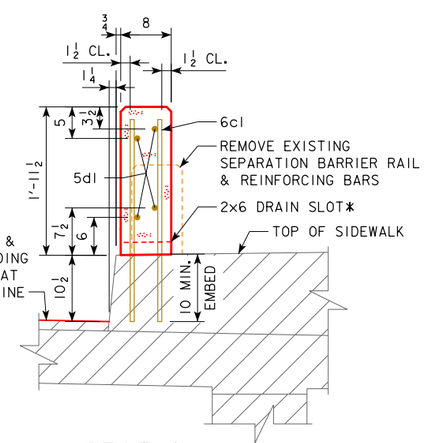

SECTION A-A

* SHIFT REINFORCING AS REQUIRED TO CLEAR DRAIN SLOTS
(STEEL PIPE PEDESTRIAN HANDRAIL NOT SHOWN)

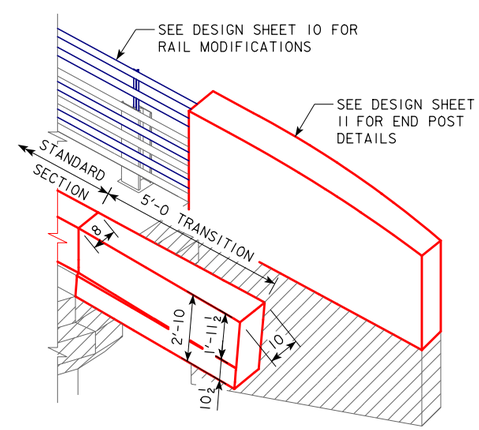

END SECTION TRANSITION

(PEDESTRIAN HAND RAIL AND TAPERED END SECTION NOT SHOWN)

whks
engineers + planners + land surveyors

DESIGN FOR REPAIRS TO 15° SKEW

243'-0 x 55'-0 PRETENSIONED PRESTRESSED CONCRETE BEAM BRIDGE

80'-9 END SPANS 81'-6 INTERIOR SPAN

SEPARATION RAIL DETAILS

STA. 36+02.00 (IA. 28) SEPTEMBER, 2019

POLK COUNTY

IOWA DEPARTMENT OF TRANSPORTATION - HIGHWAY DIVISION

DESIGN SHEET NO. 7 OF 15 FILE NO. 31486 DESIGN NO. 420

DESIGN TEAM JO/JK/TA	POLK COUNTY	PROJECT NUMBER BRFN-028-2(44)--39-77	SHEET NUMBER 8

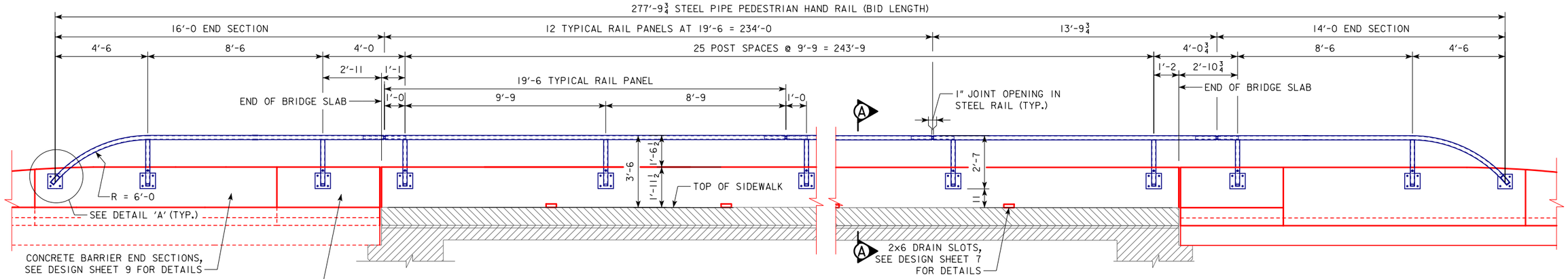

ELEVATION OF STEEL PEDESTRIAN HAND RAIL
(LOOKING WEST)

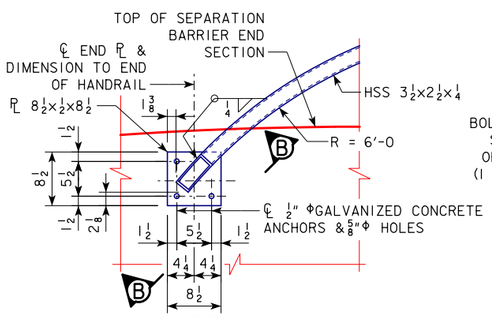

DETAIL 'A'

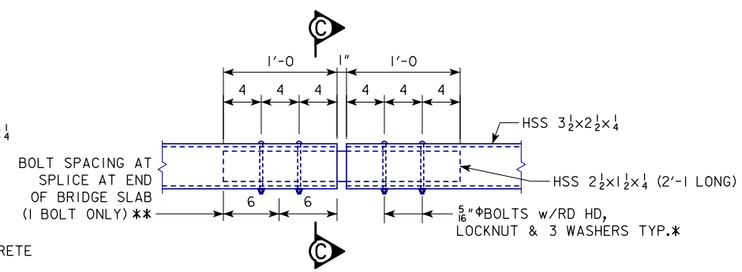

RAIL SPLICE DETAIL

NOTE:
* SPACE INNER SLEEVE FROM OUTER TUBE WITH GALVANIZED STANDARD WASHERS ABOVE AND BELOW SLEEVE AT EACH BOLT.HOLES IN INNER SLEEVE TO BE OVERSIZED (½"Φ).
** HOLE AT SPLICE AT END OF BRIDGE SLAB TO BE SLOTTED ½x 1¼

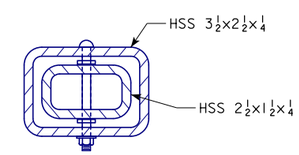

SECTION C-C

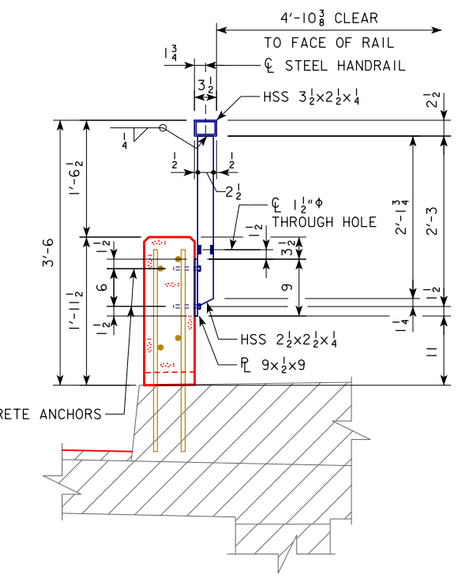

SECTION A-A

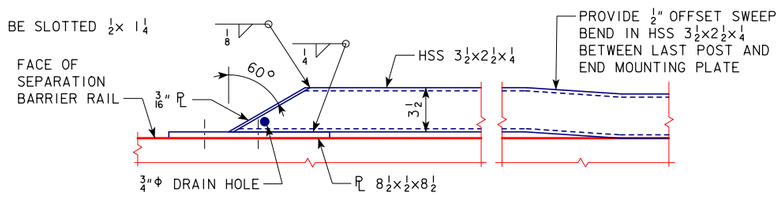

SECTION B-B

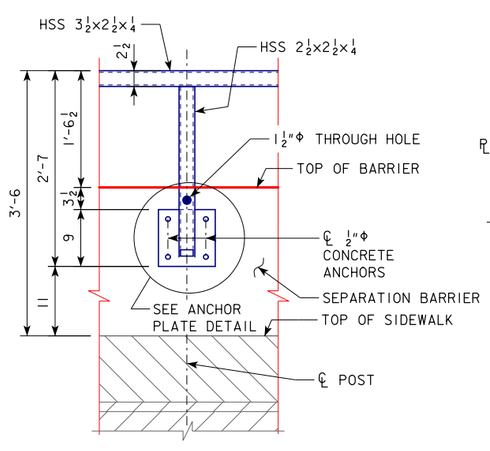

PART ELEVATION

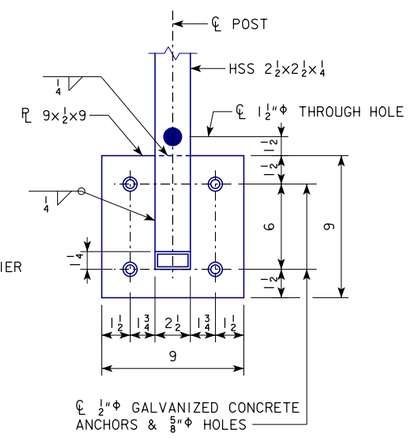

ANCHOR PLATE DETAIL

STEEL PEDESTRIAN HAND RAIL NOTES:

THE STRUCTURAL STEEL PEDESTRIAN HAND RAIL IS TO BE BID ON A LINEAL FOOT BASIS MEASURED END TO END OF RAIL. THE PRICE BID FOR "STEEL PIPE PEDESTRIAN HAND RAIL" SHALL BE FULL COMPENSATION FOR FURNISHING ALL MATERIAL, INCLUDING ANCHOR BOLTS AND SHIMS, AND ALL OF THE EQUIPMENT AND LABOR REQUIRED TO ERECT THE RAIL IN ACCORDANCE WITH THESE PLANS AND SPECIFICATIONS.

THE MATERIAL FOR HOLLOW STRUCTURAL SECTIONS SHALL MEET THE REQUIREMENTS OF ASTM A500, GRADE B. STEEL PLATES AND SHIMS SHALL MEET THE REQUIREMENTS OF ASTM A-36. PANELS AND END SECTIONS SHALL BE GALVANIZED, AFTER FABRICATION, IN ACCORDANCE WITH THE REQUIREMENTS OF ASTM A-123.

ENDS OF RAIL SECTIONS ARE TO BE SAWED OR MILLED. ALL CUT ENDS ARE TO BE TRUE, SMOOTH, AND FREE OF BURRS OR RAGGED EDGES.

NO PAINTING WILL BE REQUIRED.

THE CONCRETE ANCHORS SHALL BE GALVANIZED AND HAVE A MINIMUM PULL OUT STRENGTH OF 8000 POUNDS BASED ON 3500 PSI CONCRETE.

FOR DETAILS OF SEPARATION BARRIER RAIL SEE DESIGN SHEET 7.

RAIL QUANTITIES

ITEM	UNITS	QUANTITY
STEEL PIPE PEDESTRIAN HAND RAILING	LF	278

DESIGN FOR REPAIRS TO 15° SKEW

243'-0 x 55'-0 PRETENSIONED PRESTRESSED CONCRETE BEAM BRIDGE

80'-9 END SPANS 81'-6 INTERIOR SPAN

STEEL PEDESTRIAN HAND RAIL

STA. 36+02.00 (IA. 28) SEPTEMBER, 2019

POLK COUNTY

IOWA DEPARTMENT OF TRANSPORTATION - HIGHWAY DIVISION

DESIGN SHEET NO. 8 OF 15 FILE NO. 31486 DESIGN NO. 420

whks engineers + planners + land surveyors

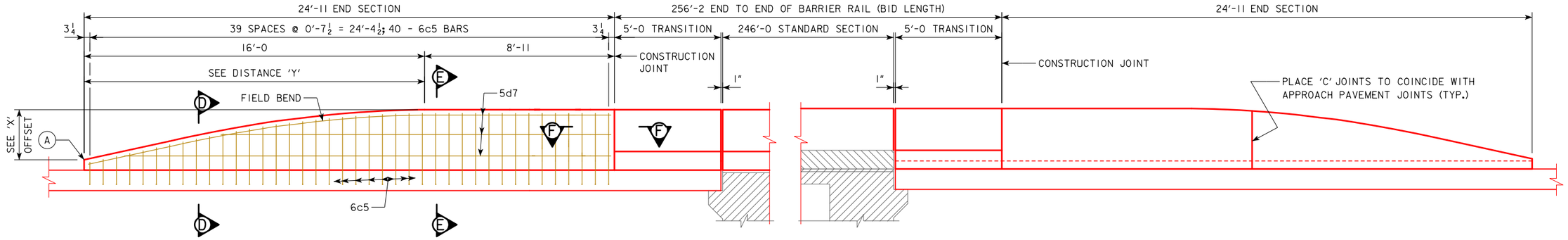

ELEVATION OF SEPARATION BARRIER RAIL END SECTIONS

(LOOKING EAST - ROADWAY SIDE)

NOTE: VERTICAL AND HORIZONTAL BARS FOR END SECTION TO BE FIELD CUT TO FIT.

THE CONCRETE BARRIER END SECTION IS TO BE BID AS "EACH" SECTION BASIS. THE NUMBER OF END SECTIONS INSTALLED WILL BE PAID FOR BASED ON PLAN QUANTITY. PRICE BID FOR "CONCRETE BARRIER END SECTION " SHALL BE FULL COMPENSATION FOR FURNISHING ALL MATERIAL EXCLUDING EPOXY COATED REINFORCING, CONCRETE, EQUIPMENT, AND LABOR REQUIRED TO CONSTRUCT THE END SECTIONS.

OFFSETS FOR ROUNDED BARRIER TOP

SOUTH END SIMILAR

'Y' = DISTANCE FROM (A)	1'-0	2'-0	3'-0	4'-0	5'-0	6'-0	7'-0	8'-0	9'-0	10'-0	11'-0	12'-0	13'-0	14'-0	15'-0	16'-0
'X' = OFFSET TO ROUNDED TOP	2.13	1.91	1.70	1.48	1.26	1.06	0.87	0.70	0.54	0.42	0.30	0.20	0.12	0.06	0.02	0.00

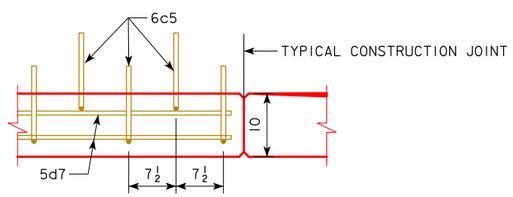

SECTION F-F

DOWEL SETTING NOTE :

THE 6c1 BARS SHALL BE SET AS DOWELS IN DRILLED HOLES. HOLES ARE TO BE 10" DEEP. THE DOWELS SHALL BE INSTALLED IN ACCORDANCE WITH THE MANUFACTURER'S RECOMMENDATIONS. EITHER OF THE FOLLOWING SYSTEMS MAY BE USED AS A BONDING AGENT FOR VERTICAL DOWELS, BUT ONLY SYSTEM "A" MAY BE USED FOR HORIZONTAL DOWELS:

A. POLYMER GROUT SYSTEM SHALL BE IN ACCORDANCE WITH ARTICLE 2301.03, E, OF THE STANDARD SPECIFICATIONS.
B. HYDRAULIC CEMENT GROUT SYSTEMS. DRILLED HOLES ARE TO BE 2 1/2 TIMES THE DOWEL DIAMETER AND ARE TO BE BLOWN CLEAN WITH COMPRESSED AIR IMMEDIATELY PRIOR TO PLACING GROUT. THE HYDRAULIC CEMENT GROUT SHALL BE ONE OF THOSE APPROVED IN MATERIALS I.M. 491.13 AND SHALL BE USED IN ACCORDANCE WITH THE MANUFACTURER'S RECOMMENDATIONS.

THE PRICE BID FOR 'CONCRETE BARRIER RAIL, REINFORCED, SEPARATION" SHALL INCLUDE ALL COSTS OF SETTING BARS AS DOWELS IN EXISTING CONCRETE.

EPOXY COATED REINFORCING STEEL

BAR	LOCATION	SHAPE	NO.	LENGTH	WEIGHT
6c1	VERTICAL, STANDARD SECTION, DOWEL	—	393	2'-7	1,525
6c5	VERTICAL, END SECTION & TRANSITION SECTION	L	98	4'-4	638
5d1	HORIZONTAL, STANDARD SECTION	—	28	37'-0	1,081
5d6	HORIZONTAL, TRANSITION SECTION	—	16	7'-2	120
5d7	HORIZONTAL, END SECTION	—	12	24'-7	308
				TOTAL (LBS)	3,672

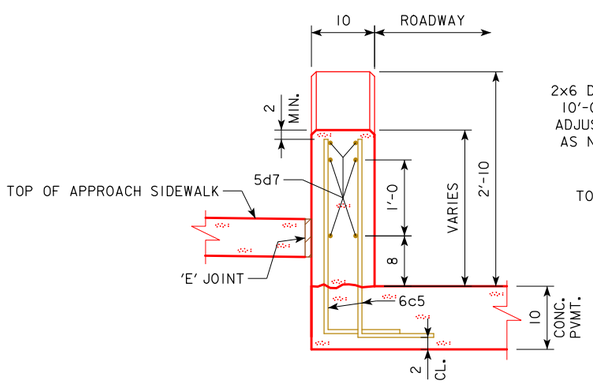

SECTION D-D

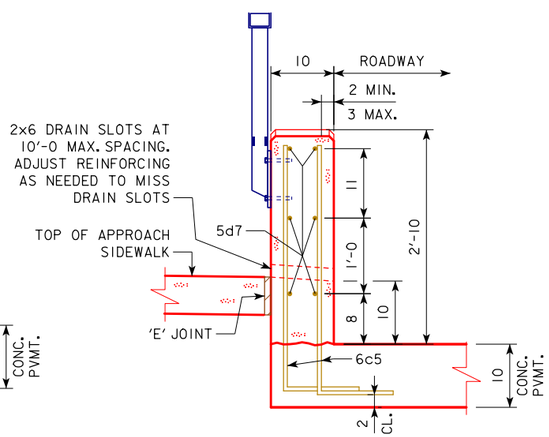

SECTION E-E

NOTE:
SEE DESIGN SHEET 7 FOR BARRIER RAILING NOTES.

SEE ROADWAY SHEETS IN THESE PLANS FOR APPROACH PAVEMENT DETAILS.

BENT BAR DETAILS

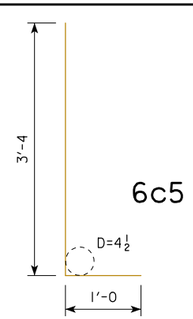

NOTE:
ALL DIMENSIONS ARE OUT TO OUT.
D = PIN DIA

CONCRETE PLACEMENT QUANTITY

LOCATION	TOTAL
STANDARD SECTION, 246 LF @ 0.048 CY/FT	11.8
END SECTIONS, 2 @ 1.8 CY EA.	3.6
TRANSITION SECTIONS, 2 @ 0.4 CY EA.	0.8
(FOR INFORMATION ONLY) TOTAL (CU. YDS.)	16.2

SEPARATION RAIL QUANTITY

LOCATION	UNITS	QUANTITY
CONCRETE BARRIER, REINFORCED, SEPARATION	LF	256.2

whks
engineers + planners + land surveyors

NOTE:
SEE ROADWAY SHEETS IN THESE PLANS FOR APPROACH PAVEMENT DETAILS.

NOTE:
CONSTRUCTION JOINT BETWEEN RAIL AND APPROACH PAVEMENT IS TO BE ROUGHENED TO 1/4" MIN. AMPLITUDE, CLEANED, AND FREE OF LAITANCE.

DESIGN FOR REPAIRS TO 15° SKEW

243'-0 x 55'-0 PRETENSIONED PRESTRESSED CONCRETE BEAM BRIDGE

80'-9 END SPANS 81'-6 INTERIOR SPAN

SEPARATION RAIL DETAILS

STA. 36+02.00 (IA. 28) SEPTEMBER, 2019

POLK COUNTY

IOWA DEPARTMENT OF TRANSPORTATION - HIGHWAY DIVISION

DESIGN SHEET NO. 9 OF 15 FILE NO. 31486 DESIGN NO. 420

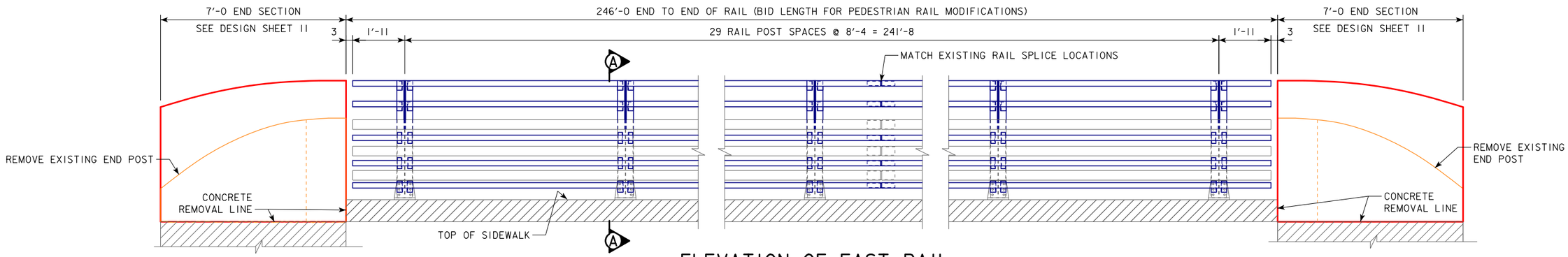

ELEVATION OF EAST RAIL
(LOOKING EAST)

ALL NEW RAIL MEMBERS AND PARTS MUST BE FABRICATED TO FIT EXISTING MEMBERS. THE CONTRACTOR SHALL TAKE APPROPRIATE CARE TO MEASURE THE LOCATIONS OF EACH EXISTING POST AND EXISTING HOLE LOCATIONS PRIOR TO FABRICATION OF NEW RAIL MEMBERS AND RAIL CONNECTION DETAILS.

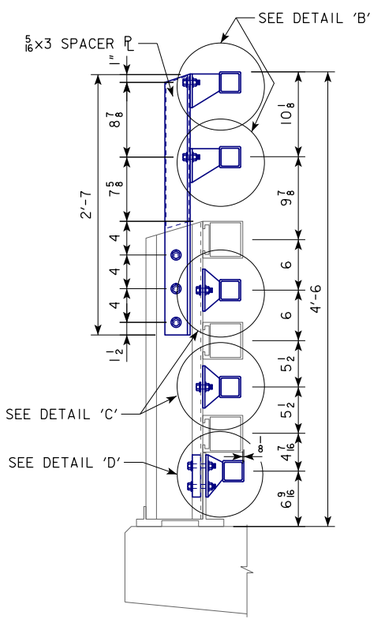

SECTION A-A

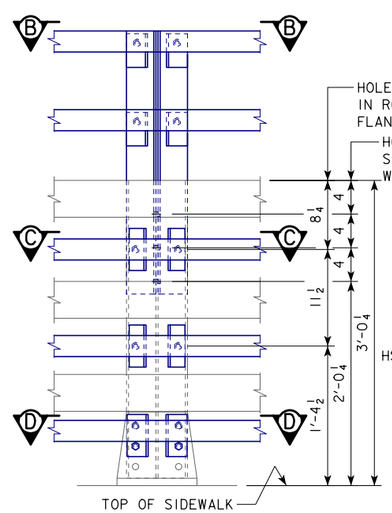

TYPICAL RAIL AND POST DETAILS

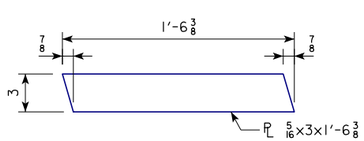

SPACER PLATE DETAIL

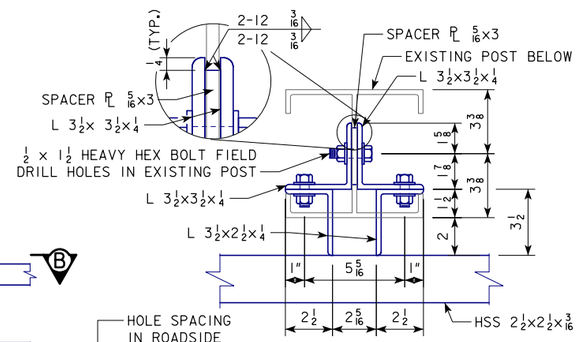

SECTION B-B

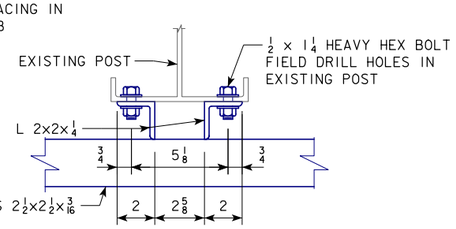

SECTION C-C

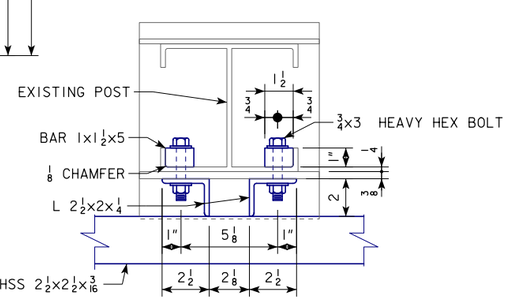

SECTION D-D

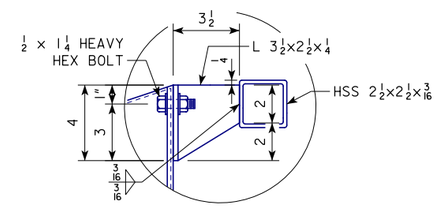

DETAIL B

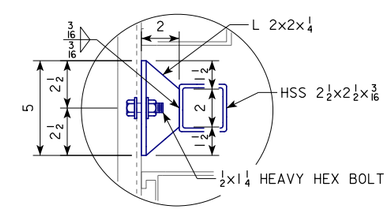

DETAIL C

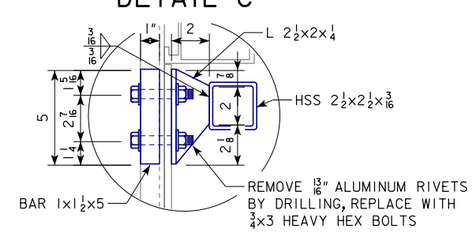

DETAIL D

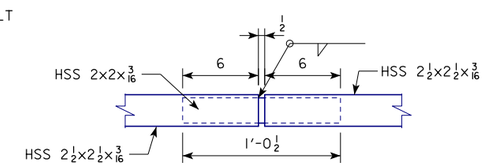

TYPICAL RAIL SPLICE DETAIL

RAIL QUANTITIES

ITEM	UNITS	QUANTITY
PEDESTRIAN RAIL MODIFICATION	LF	246.0

PEDESTRIAN RAIL MODIFICATION NOTES:

ALL WORK AND MATERIALS FOR PEDESTRIAN RAIL MODIFICATIONS SHALL BE IN ACCORDANCE WITH SECTION 2408 OF THE STANDARD SPECIFICATIONS AND AS NOTED IN THESE PLANS.

THE PEDESTRIAN RAIL MODIFICATION IS TO BE BID ON A LINEAL FOOT BASIS MEASURED END TO END OF RAIL. THE PRICE BID FOR BRIDGE RAIL SHALL BE FULL COMPENSATION FOR FURNISHING ALL MATERIAL, INCLUDING BOLTS, WASHERS AND PLATES, AND ALL OF THE EQUIPMENT AND LABOR REQUIRED TO VERIFY DIMENSIONS, FABRICATE MEMBERS, AND ERECT THE RAIL IN ACCORDANCE WITH THESE PLANS AND SPECIFICATIONS.

THE MATERIAL FOR HSS RAILS, AND SPLICE TUBES SHALL BE STANDARD STEEL HSS MEETING THE REQUIREMENTS OF ASTM A1085 OR ASTM A500, GRADE B. PLATES AND ANGLES SHALL BE STANDARD STEEL MEETING THE REQUIREMENTS OF ASTM A709 GRADE 36. BOLTS, NUTS AND WASHERS SHALL BE NON-HIGH STRENGTH STEEL MEETING THE REQUIREMENTS OF A307, GRADE A OR B FOR BOLTS, A563, GRADE C FOR NUTS AND F436 FOR WASHERS.

ALL NEW STEEL PARTS SHALL BE GALVANIZED, AFTER FABRICATION, IN ACCORDANCE WITH THE REQUIREMENTS OF ASTM A123. FASTENERS SHALL BE GALVANIZED IN ACCORDANCE WITH THE REQUIREMENTS OF ASTM F2329.

ENDS OF RAIL SECTIONS ARE TO BE SAWED OR MILLED. ALL CUT ENDS ARE TO BE TRUE, SMOOTH, AND FREE OF BURRS OR RAGGED EDGES.

NO PAINTING WILL BE REQUIRED.

FOR DETAILS OF CONCRETE END SECTION SEE DESIGN SHEET 11 OF THESE PLANS.

whks
engineers + planners + land surveyors

DESIGN FOR REPAIRS TO 15° SKEW

243'-0 x 55'-0 PRETENSIONED PRESTRESSED CONCRETE BEAM BRIDGE

80'-9 END SPANS — 81'-6 INTERIOR SPAN

PEDESTRIAN RAIL MODIFICATIONS

STA. 36+02.00 (IA. 28) — SEPTEMBER, 2019

POLK COUNTY

IOWA DEPARTMENT OF TRANSPORTATION - HIGHWAY DIVISION

DESIGN SHEET NO. 10 OF 15 FILE NO. 31486 DESIGN NO. 420

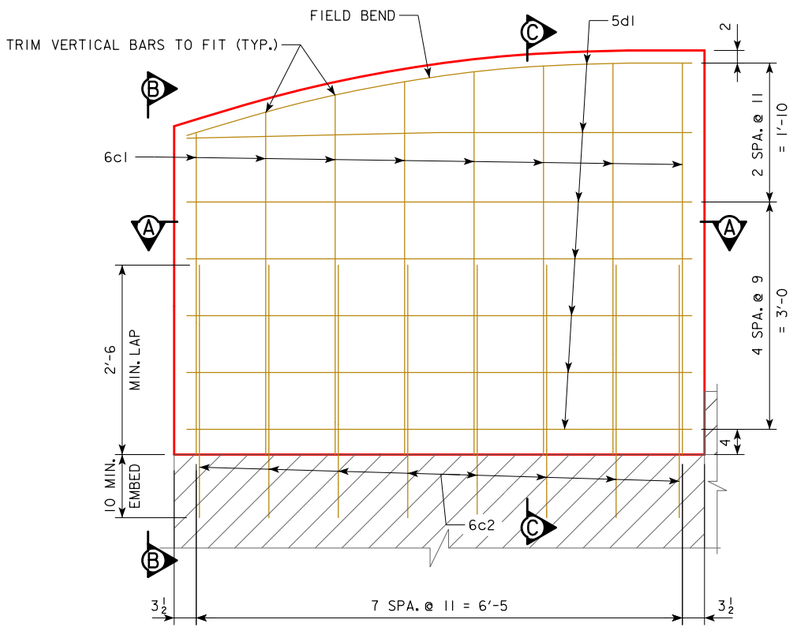

END SECTION ELEVATION
(WITH REINFORCING (TYP. BOTH END SECTIONS)

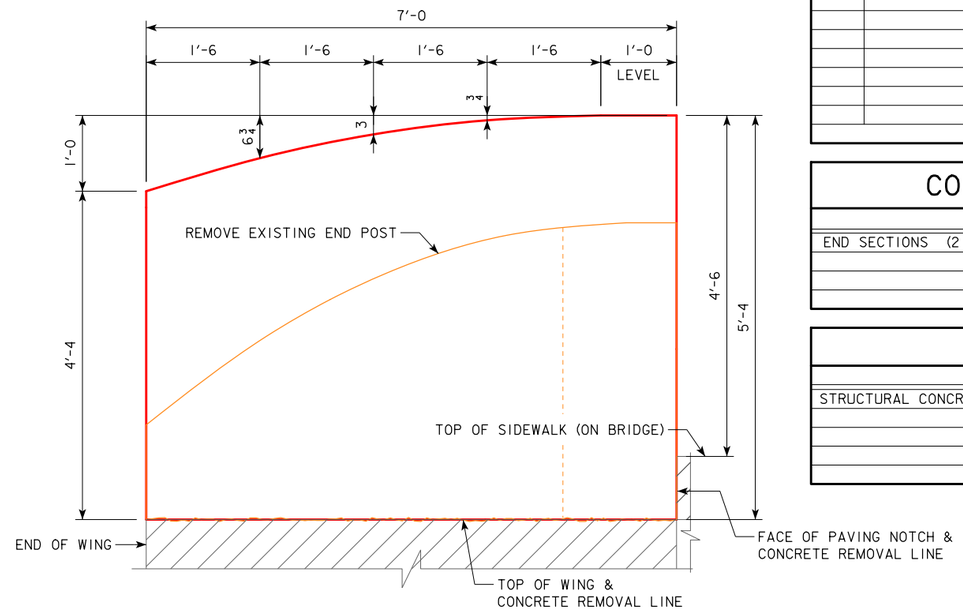

END SECTION ELEVATION
(REQUIREDAT NE & SE WINGS)

EPOXY COATED REINF. STEEL - 2 END SECTIONS

BAR	LOCATION	SHAPE	NO.	LENGTH	WEIGHT
6c1	END SECTION, VERTICAL		32	VARIES	224
6c2	END SECTION, VERTICAL, DOWELS		32	3'-4	160
5d1	END SECTION, HORIZONTAL		28	6'-8	195
				TOTAL (LBS)	579

CONCRETE PLACEMENT QUANTITY

LOCATION	TOTAL
END SECTIONS (2 @ 1.4 CY)	2.8
TOTAL (CY)	2.8

ESTIMATED QUANTITIES

ITEM	UNITS	QUANTITY
STRUCTURAL CONCRETE (MISC.)	CY	2.8

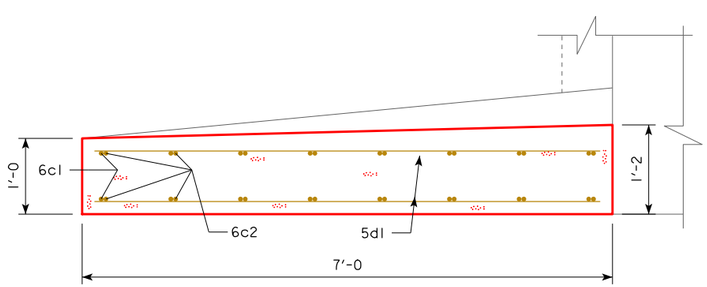

SECTION A-A

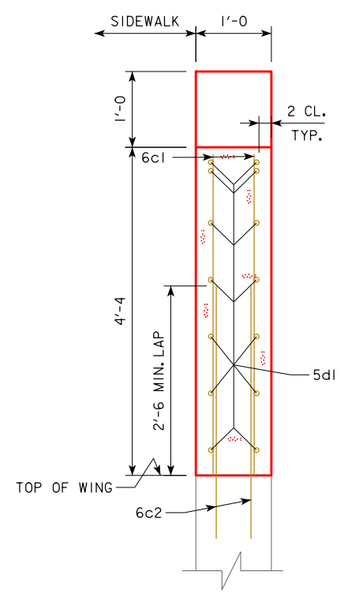

VIEW B-B

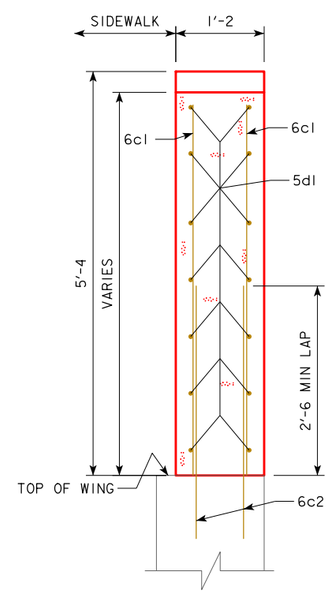

SECTION C-C

DOWEL SETTING NOTE:

THE 6c2 BARS SHALL BE SET AS DOWELS IN DRILLED HOLES. HOLES ARE TO BE 10" DEEP. THE DOWELS SHALL BE INSTALLED IN ACCORDANCE WITH THE MANUFACTURER'S RECOMMENDATIONS. EITHER OF THE FOLLOWING SYSTEMS MAY BE USED AS A BONDING AGENT FOR VERTICAL DOWELS, BUT ONLY SYSTEM "A" MAY BE USED FOR HORIZONTAL DOWELS:

A. POLYMER GROUT SYSTEM IN ACCORDANCE WITH STANDARD SPECIFICATIONS.

B. HYDRAULIC CEMENT GROUT SYSTEMS. DRILLED HOLES ARE TO BE 2 Φ TIMES THE DOWEL DIAMETER AND ARE TO BE BLOWN CLEAN WITH COMPRESSED AIR IMMEDIATELY PRIOR TO PLACING GROUT. THE HYDRAULIC CEMENT GROUT SHALL BE ONE OF THOSE APPROVED IN MATERIALS I.M. 491.13 AND SHALL BE USED IN ACCORDANCE WITH THE MANUFACTURER'S RECOMMENDATIONS.

THE PRICE BID FOR 'STRUCTURAL CONCRETE (MISC.)" SHALL INCLUDE ALL COSTS OF SETTING BARS AS DOWELS IN EXISTING CONCRETE.

whks
engineers + planners + land surveyors

DESIGN FOR REPAIRS TO 15° SKEW

243'-0 x 55'-0 PRETENSIONED PRESTRESSED CONCRETE BEAM BRIDGE

80'-9 END SPANS 81'-6 INTERIOR SPAN

PED. RAIL CONCRETE END SECTIONS

STA. 36+02.00 (IA. 28) SEPTEMBER, 2019

POLK COUNTY

IOWA DEPARTMENT OF TRANSPORTATION - HIGHWAY DIVISION

DESIGN SHEET NO. 11 OF 15 FILE NO. 31486 DESIGN NO. 420

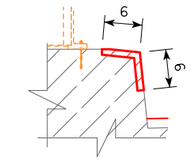

TYPICAL CORNER REPAIR

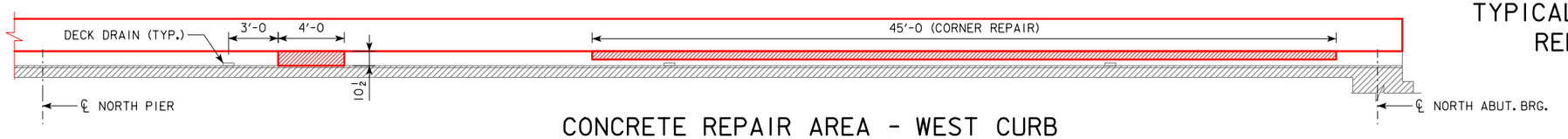

CONCRETE REPAIR AREA - WEST CURB
(NORTH SPAN, LOOKING WEST)

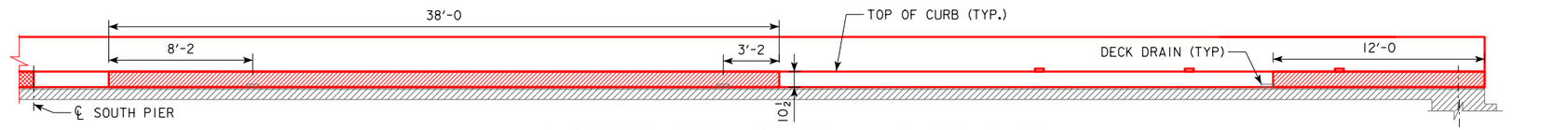

CONCRETE REPAIR AREA - EAST CURB
(SOUTH SPAN, LOOKING EAST)

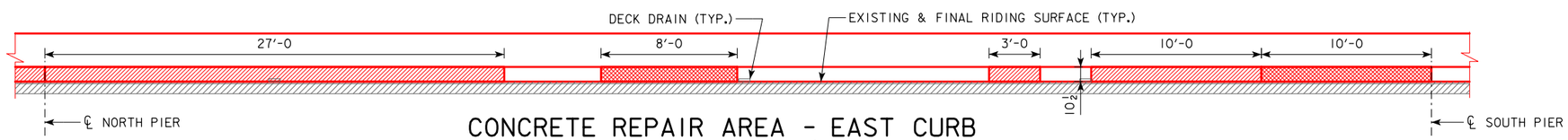

CONCRETE REPAIR AREA - EAST CURB
(CENTER SPAN, LOOKING EAST)

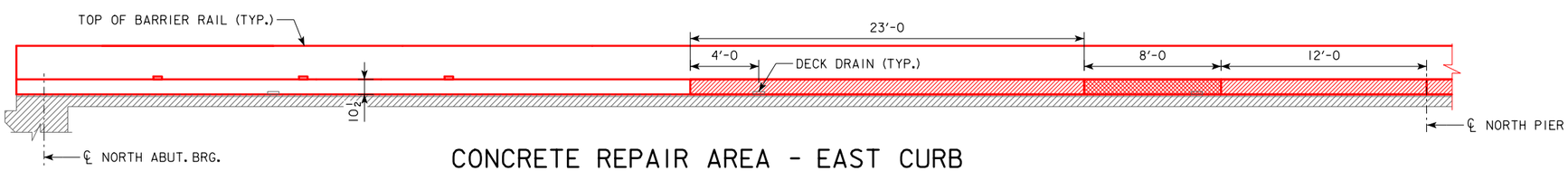

CONCRETE REPAIR AREA - EAST CURB
(NORTH SPAN, LOOKING EAST)

LEGEND

1	INDICATES SHALLOW REPAIR
2	INDICATES REGULAR REPAIR

NOTE:

ALL REPAIR AREAS ARE APPROXIMATE BASED ON AN APRIL 2017 FIELD EXAM. ACTUAL SPALLED AND HOLLOW AREAS, AS DETERMINED BY THE ENGINEER, SHALL BE REPAIRED.

whks
engineers + planners + land surveyors

DESIGN FOR REPAIRS TO 15° SKEW

243'-0 x 55'-0 PRETENSIONED PRESTRESSED CONCRETE BEAM BRIDGE

80'-9 END SPANS 81'-6 INTERIOR SPAN

CURB REPAIR AREA DETAILS

STA. 36+02.00 (IA. 28) SEPTEMBER, 2019

POLK COUNTY

IOWA DEPARTMENT OF TRANSPORTATION - HIGHWAY DIVISION

DESIGN SHEET NO. 12 OF 15 FILE NO. 31486 DESIGN NO. 420

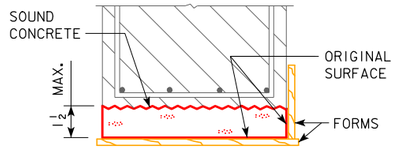

SHALLOW REPAIR BOTTOM SURFACE

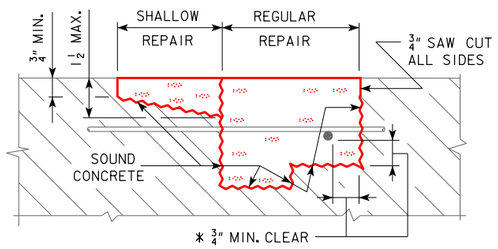

REPAIR DEFINITION

* INDICATES CLEARANCE FOR AN UN-BONDED REBAR.

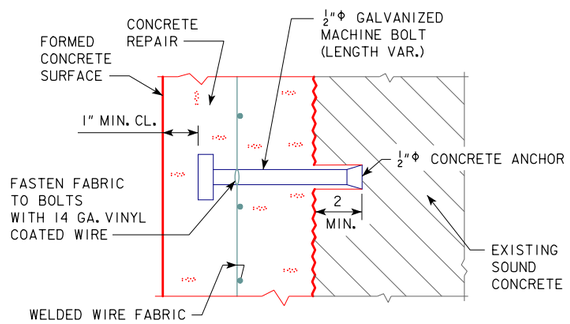

ANCHOR DETAIL

FOR SPACING AND USE OF CONCRETE ANCHORS AND WWF SEE THE REPAIR NOTES.

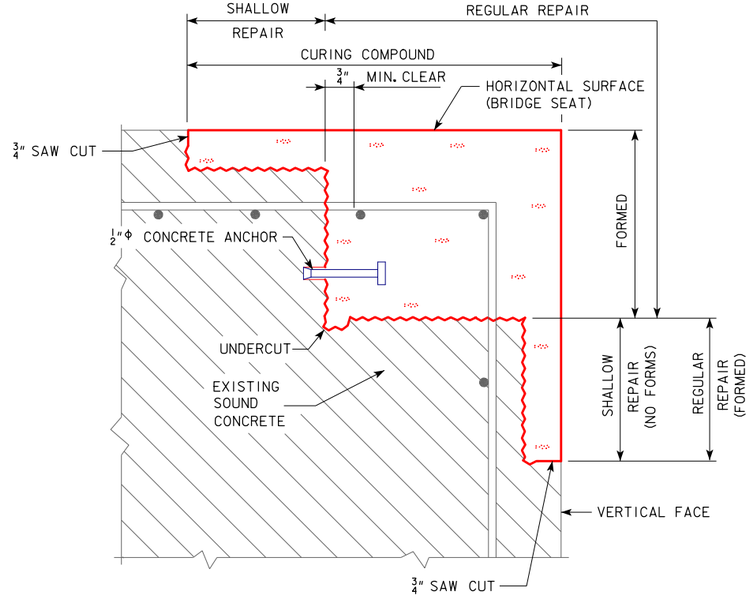

CORNER REPAIR

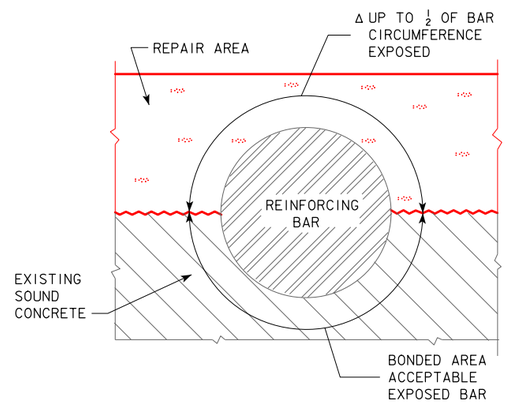

Δ IF MORE THAN ½ OF THE REBAR IS EXPOSED IT SHALL BE TREATED AS AN UN-BONDED REBAR.

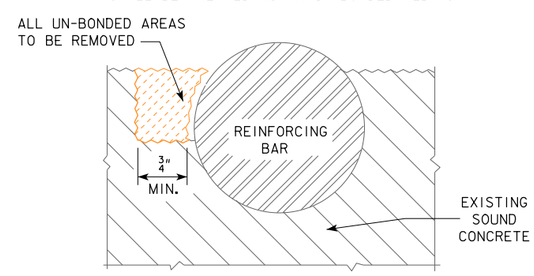

CONCRETE REMOVAL ADJACENT TO REINFORCING

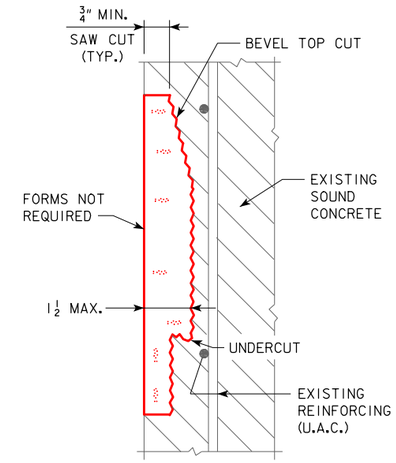

SHALLOW REPAIR VERTICAL FACE

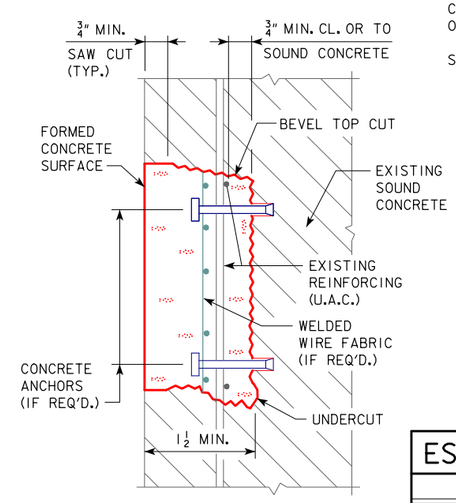

REGULAR REPAIR VERTICAL FACE

REPAIR NOTES:

THE SPALLED AND HOLLOW AREAS OF THIS BRIDGE AS NOTED AND SHOWN IN THESE PLANS SHALL BE REPAIRED AS FOLLOWS:

ALL THE COSTS OF EQUIPMENT AND MATERIALS REQUIRED TO REPAIR THE SPALLED AND HOLLOW AREAS OF THIS BRIDGE SHALL BE INCLUDED IN THE PRICE BID FOR "CONCRETE REPAIR".

THE PRICE BID FOR "CONCRETE REPAIR" SHALL INCLUDE THE COST OF ALL CONCRETE ANCHORS AND WELDED WIRE FABRIC REQUIRED BY THE PLANS.

THE ENGINEER SHALL DETERMINE AND OUTLINE BY VISUAL AND AUDIBLE INSPECTION THE ACTUAL AREAS OF THE CONCRETE REPAIRS. THE CONTRACTOR SHALL BE PAID FOR THE ACTUAL AMOUNT OF REPAIRS MADE ON A SQUARE FOOT BASIS BASED ON THE PRICE BID PER SQUARE FOOT.

ALL EXISTING REINFORCING BARS THAT ARE EXPOSED BY CONCRETE REMOVAL SHALL BE CLEANED AND CAREFULLY INCORPORATED INTO THE NEW WORK, EXCEPT BADLY DETERIORATED EXISTING REINFORCING WHICH SHALL BE REPLACED AS DIRECTED BY THE ENGINEER.

THE CONCRETE ANCHORS REQUIRED SHALL HAVE A MINIMUM PULL OUT OF 5000 LBS. BASED ON 4000 PSI CONCRETE. AN ANCHOR MEETING THE REQUIREMENTS OF IOWA D.O.T. MATERIALS I.M. 453.09 AND THE PULL OUT LOAD ABOVE IS REQUIRED. THE ANCHORS SHALL BE GALVANIZED AND SHALL BE INSTALLED ACCORDING TO RECOMMENDATIONS OF THE MANUFACTURER. THE COST OF FURNISHING AND INSTALLING THE CONCRETE ANCHORS SHALL BE INCLUDED IN THE PRICE BID FOR "CONCRETE REPAIR".

THE WELDED WIRE FABRIC SHALL BE ASTM A185 AND GALVANIZED AS PER ASTM A-641. THE WWF WIRES SHALL BE SPACED 3 x 3 OR 4 x 4 AND THE WIRES SHALL HAVE A NOMINAL AREA OF 0.014 TO 0.029 SQUARE INCHES INCLUSIVE, EXAMPLE "WWF 3 x 3 - W1.4 x W2.9".

WHERE REINFORCEMENT HAS BEEN EXPOSED AND CLEARANCE AROUND THE PERIPHERY OF THE EXISTING BAR IS PROVIDED NO SUPPLEMENTAL REINFORCING IS REQUIRED, EXCEPT WHERE EXISTING REINFORCEMENT DENSITY AND PATTERN ARE SUCH THAT INDIVIDUAL OPEN SPACES BETWEEN BARS ARE OF 1.5 SQUARE FOOT OR LARGER. FOR THIS CONDITION ½"Φ CONCRETE ANCHORS AND WELDED WIRE FABRIC SHALL BE INSTALLED AT THE RATE OF ONE CONCRETE ANCHOR WITH WWF PER EACH 1.5 SQUARE FEET OF AREA WITHIN EACH OPEN SPACE.

REPAIRING THE STRUCTURAL CONCRETE SHALL BE IN ACCORDANCE WITH SECTION 2426, OF THE STANDARD SPECIFICATIONS.

CONCRETE PLACEMENT QUANTITIES

MARK	TYPE	UNITS	QUANTITY
1	SHALLOW REPAIR	SQ. FT.	197
2	REGULAR REPAIR	SQ. FT.	23
		TOTAL (SQ. FT.)	220

ESTIMATED CONCRETE REPAIR QUANTITIES

DESCRIPTION	UNITS	AMOUNT
CONCRETE REPAIR	SQ. FT.	220

DESIGN FOR REPAIRS TO 15° SKEW

243'-0 x 55'-0 PRETENSIONED PRESTRESSED CONCRETE BEAM BRIDGE

80'-9 END SPANS 81'-6 INTERIOR SPAN

CONCRETE REPAIR DETAILS

STA. 36+02.00 (IA. 28) SEPTEMBER, 2019

POLK COUNTY

IOWA DEPARTMENT OF TRANSPORTATION - HIGHWAY DIVISION

DESIGN SHEET NO. 13 OF 15 FILE NO. 31486 DESIGN NO. 420

REVISED 10-14 - DELETED ALL REFERENCES TO GROUT. SECTION 2426 COVERS THIS REQUIREMENT AND DOESN'T NEED TO STATED ON THE PLANS.
ENGLISHREPAIRRETROFITBRIDGES.DGN 1045 - THIS SHEET REDRAWN 9-27-90.

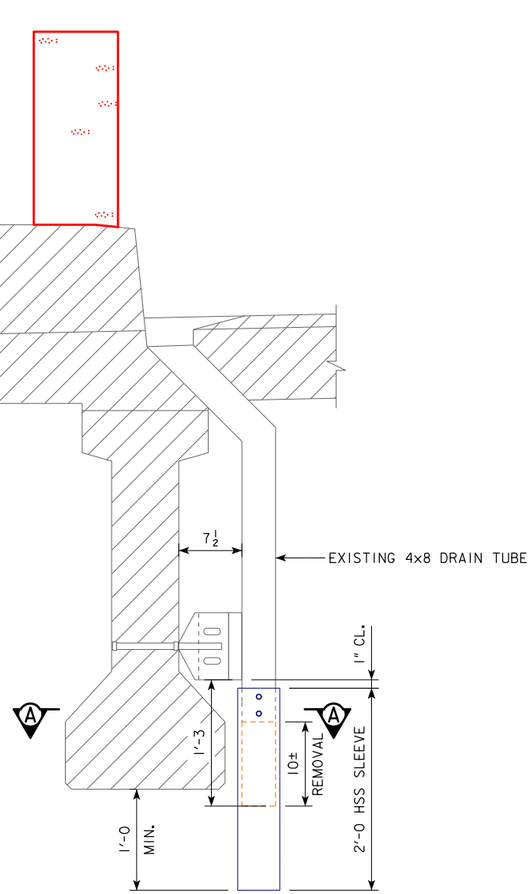

WEST DRAINS

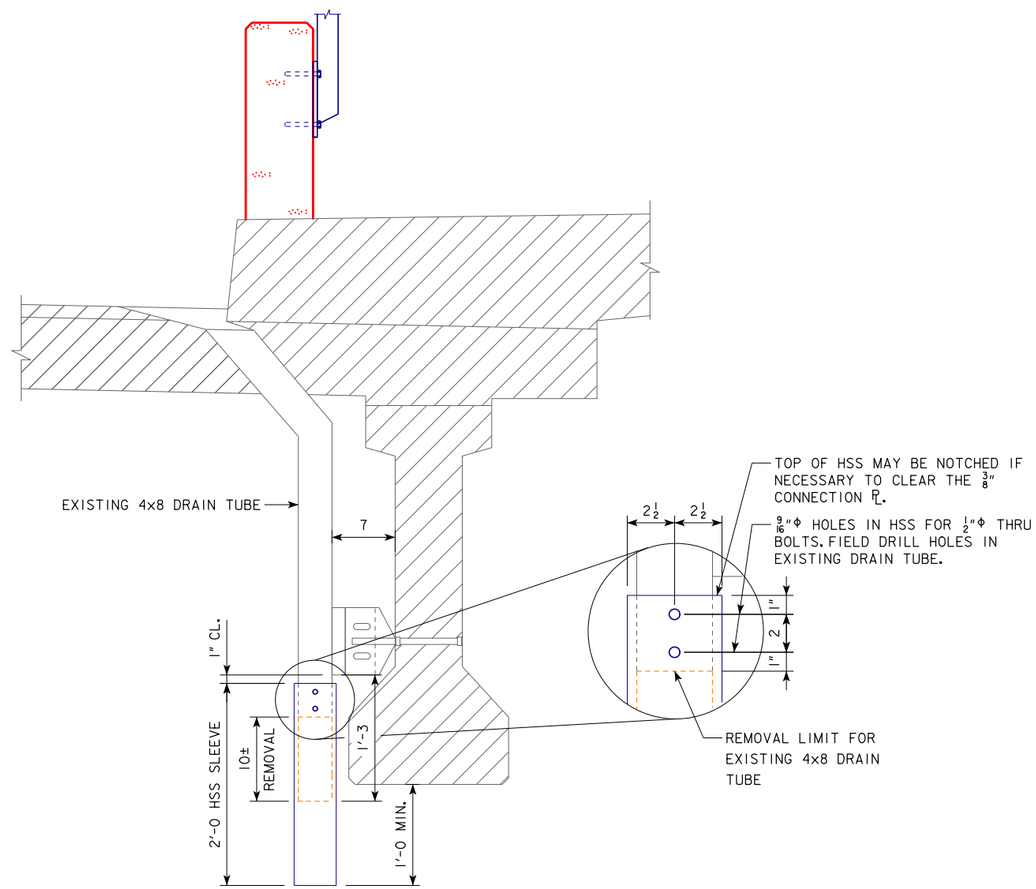

EAST DRAINS

PART ELEVATION SHOWING DECK DRAIN EXTENSIONS

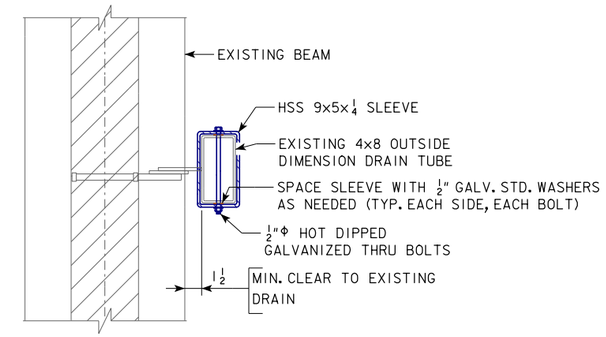

SECTION A-A

DECK DRAIN EXTENSION NOTES:

ALL DIMENSIONS TO FABRICATE STRUCTURAL STEEL SHALL BE VERIFIED IN THE FIELD BY THE CONTRACTOR PRIOR TO FABRICATION OF THE STEEL.

BOTTOM OF EXISTING DRAINS WHICH ARE DAMAGED OR CORRODED SHALL BE REMOVED. THERMAL CUTTING IS NOT PERMITTED NEAR THE 12" GAS MAIN ON THE EAST SIDE. LENGTH OF REMOVAL IS PERMITTED TO BE ADJUSTED AS NECESSARY WITH APPROVAL OF THE ENGINEER.

HSS SHALL MEET THE REQUIREMENTS OF ASTM A1085 OR ASTM A500 GRADE B. BOLTS SHALL MEET THE REQUIREMENTS OF ASTM A307. NUTS AND WASHERS SHALL BE ACCORDING TO ARTICLE 4153.06, B, OF THE STANDARD SPECIFICATIONS.

DRAIN EXTENSIONS SHALL BE GALVANIZED AFTER FABRICATION IN ACCORDANCE WITH ASTM A123.

WEIGHT OF EACH DRAIN EXTENSION = 46 LB INCLUDING BOLTS.

MEASUREMENT FOR DRAIN EXTENSIONS WILL BE BY COUNT FOR EACH DRAIN EXTENSION. 18 DECK DRAIN EXTENSIONS REQUIRED (9 EACH SIDE OF THE BRIDGE). SEE SITUATION PLAN FOR LOCATIONS. PAYMENT FOR DRAIN EXTENSIONS WILL BE THE CONTRACT UNIT PRICE FOR THE TOTAL NUMBER OF DRAIN EXTENSIONS INSTALLED. PAYMENT SHALL BE FULL COMPENSATION FOR REMOVALS AND ALL MATERIALS AND LABOR REQUIRED TO INSTALL THE DRAIN EXTENSIONS.

whks
engineers + planners + land surveyors

DESIGN FOR REPAIRS TO 15° SKEW

243'-0 x 55'-0 PRETENSIONED PRESTRESSED CONCRETE BEAM BRIDGE

80'-9 END SPANS 81'-6 INTERIOR SPAN

DECK DRAIN EXTENSIONS

STA. 36+02.00 (IA. 28) SEPTEMBER, 2019

POLK COUNTY

IOWA DEPARTMENT OF TRANSPORTATION - HIGHWAY DIVISION

DESIGN SHEET NO. 14 OF 15 FILE NO. 31486 DESIGN NO. 420

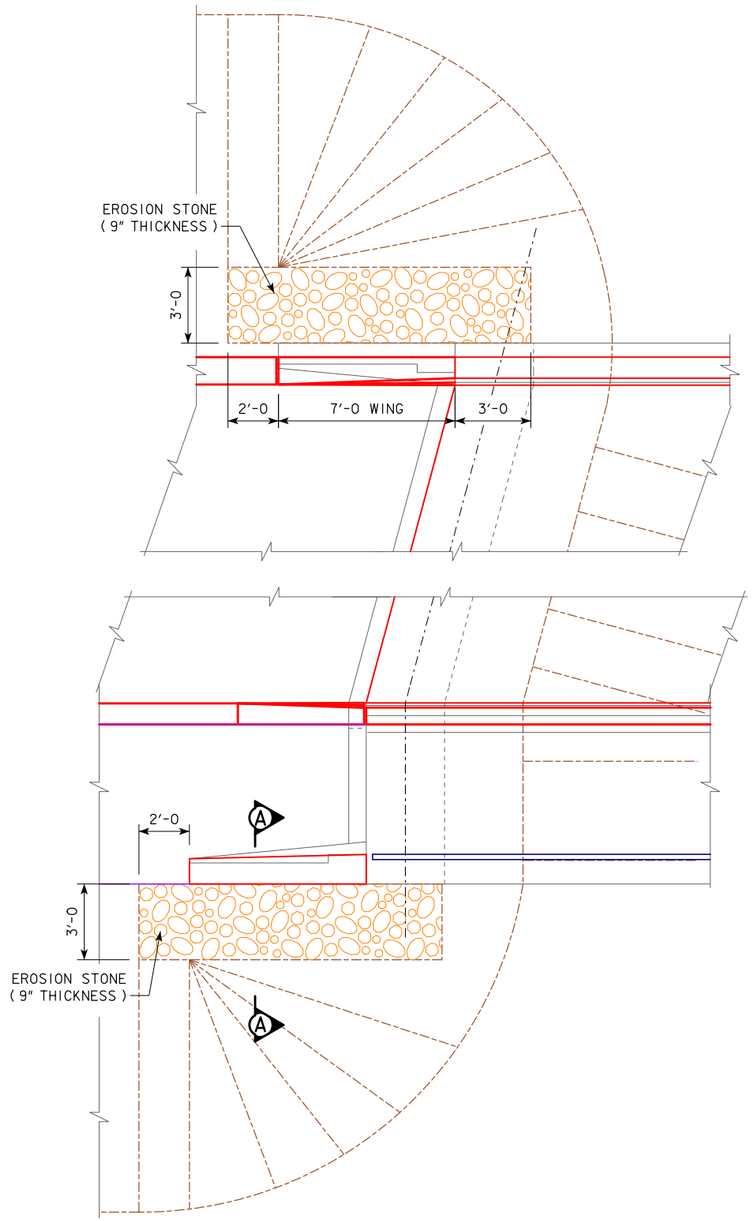

TOP VIEW OF WING ARMORING
(SOUTH ABUTMENT SHOWN, NORTH ABUTMENT SIMILAR)

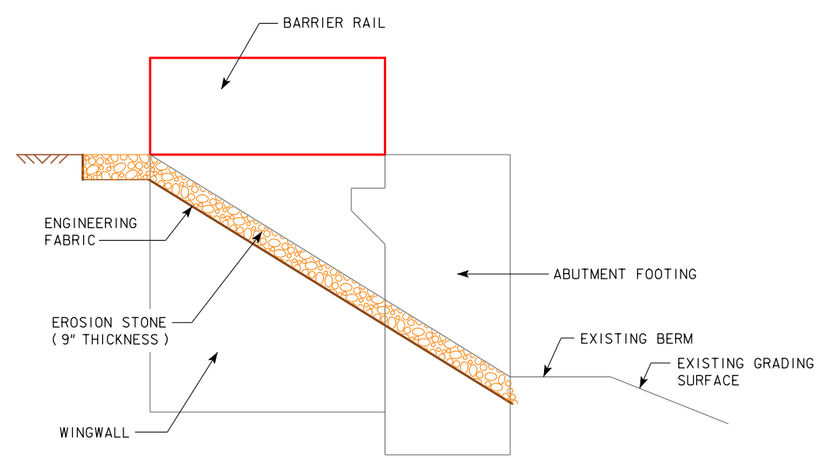

PROFILE VIEW OF WING ARMORING

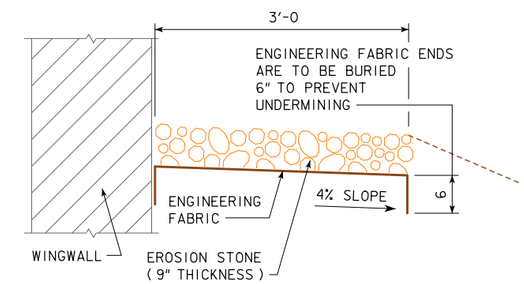

SECTION A-A

GENERAL NOTES:

EROSION STONE SHALL BE PLACED ALONG THE SIDES OF THE WINGS AND ABUTMENT FOOTING AS SHOWN IN SECTION A-A. THIS IS TYPICAL AT EACH CORNER OF THE BRIDGE UNLESS OTHERWISE NOTED IN THE PLANS. THE EROSION STONE AT THESE LOCATIONS SHALL BE UNDERLAYED WITH ENGINEERING FABRIC IN ACCORDANCE WITH ARTICLE 4196.01, B, 3, OF THE STANDARD SPECIFICATIONS.

THE EROSION STONE SHALL BE IN ACCORDANCE WITH SECTION 4130, OF THE STANDARD SPECIFICATIONS. MATERIAL PASSING THE 3 INCH SCREEEN BUT 100% RETAINED ON A 1 INCH SCREEN MAY BE USED AS CHOKE STONE.

THE EROSION STONE SHALL BE DEPOSITED, SPREAD, CONSOLIDATED AND SHAPED BY MECHANICAL OR HAND METHODS THAT WILL PROVIDE UNIFORM 9" DEPTH AND DENSITY AND PROVIDE UNIFORM SURFACE APPEARANCE.

PAYMENT FOR THE BRIDGE WING ARMORING WILL BE BID PER SQUARE YARD. COST WILL INCLUDE ENGINEERING FABRIC, EROSION STONE, EXCAVATION, SHAPING, AND COMPACTION TO DIMENSIONS SHOWN IN THESE PLANS. BID ITEM SHALL BE "BRIDGE WING ARMORING - EROSION STONE".

whks
engineers + planners + land surveyors

DESIGN FOR REPAIRS TO 15° SKEW

243'-0 x 55'-0 PRETENSIONED PRESTRESSED CONCRETE BEAM BRIDGE

80'-9 END SPANS 81'-6 INTERIOR SPAN

BRIDGE WING ARMORING

STA. 36+02.00 (1A. 28) SEPTEMBER, 2019

POLK COUNTY

IOWA DEPARTMENT OF TRANSPORTATION - HIGHWAY DIVISION

DESIGN SHEET NO. 15 OF 15 FILE NO. 31486 DESIGN NO. 420

INDEX OF SHEETS

No.	DESCRIPTION
A Sheets	**Title Sheets**
A.1	Roadway Title Sheet
B Sheets	**Typical Cross Sections and Details**
B.1	Typical Cross Sections and Details
C Sheets	**Quantities and General Information**
C.1	Project Description
C.1	Estimated Roadway Quantities
C.1	Estimate Reference Information
C.1	Index of Tabulations
C.2	Standard Road Plans
C.2	General Notes
C.2 - 4	Tabulations
D Sheets	**Mainline Plan and Profile Sheets**
* D.1	IA 28 Plan Sheet
J Sheets	**Traffic Control and Staging Sheets**
J.1	Traffic Control Plan
J.1	Staging Notes
J.1	511 Travel Restrictions
J.2	Staging Typical Cross Sections
* J.3 - 6	Staging and Traffic Control Sheets Stage 1
* J.7 - 10	Staging and Traffic Control Sheets Stage 2
M Sheets	**Storm Sewer Sheets**
M.1	Storm Sewer Tabulations
U Sheets	**500 Series, Mod.Stds. and Detail Sheets**
* U.1 - 2	Modified BR-202
* U.3	Detail 570-5, Erosion Control for Intake Well

* Color Plan Sheets

LICENSED PROFESSIONAL ENGINEER
BRIAN J. BIRKLAND
17375
IOWA

I hereby certify that this plan was prepared by me or under my direct personal supervision and that I am a duly licensed Professional Engineer under the laws of the State of Iowa.

Signature: Brian J. Birkland Date: 8-13-19

Printed or Typed Name: Brian J. Birkland

My license renewal date is December 31, 2020

Pages or sheets covered by this seal: A.1, B.1, C.1-C.4, D.1, J.1-J.10, M.1, U.1-U.3

whks
engineers + planners + land surveyors

Design No. 420
File No. 31486

FILE NO. 31486	ENGLISH	DESIGN TEAM WHKS & CO.	POLK COUNTY	PROJECT NUMBER BRFN-028-2(44)--39-77	SHEET NUMBER A.1

3:23:50 PM 8/13/2019 bbirkland K:\8500.04\Polk420-IA28overWalnutCreek\Plans\77028044.dsn

8212
MODIFIED

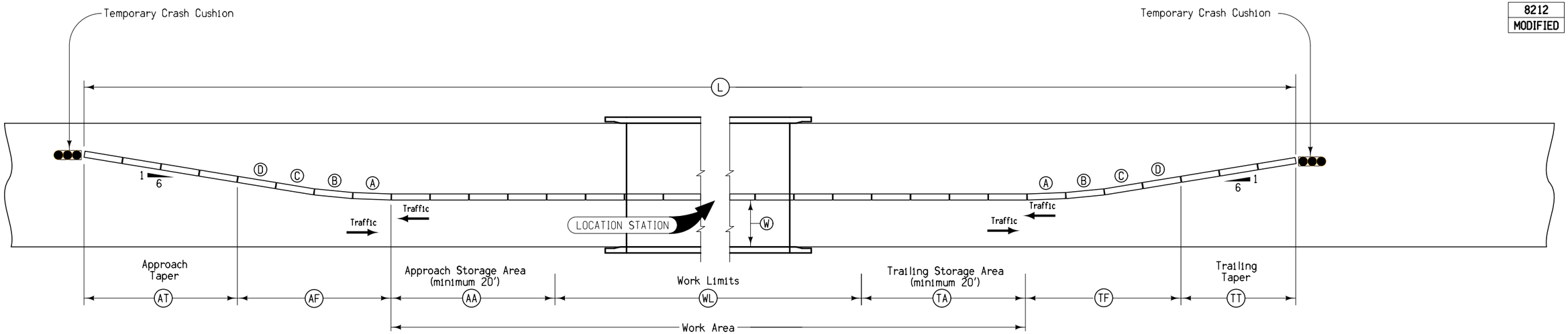

Notes:

The location station is centered in the work area and is the bridge center Station.
Barrier lengths include the gaps between TBR sections.

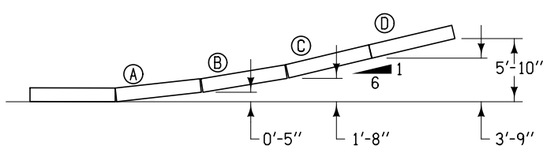

BARRIER OFFSETS FOR FLARE SECTIONS

Station	Side	AT	AF	AA	WL	TA	TF	TT	L	Anchored	W	Remarks
		Feet	Feet	Feet	Feet	Feet	Feet	Feet	Feet	X	Feet	
36+02.00	Lt.	50.3	51.1	24.4	385.5	25.0	51.1	50.3	637.7	X	24.6	Stage 1: 50 - 12.5' TBR Sections
36+02.00	Rt.	50.3	51.1	24.4	385.5	25.0	51.1	50.3	637.7	X	24.6	Stage 2: 50 - 12.5' TBR Sections

TEMPORARY CONCRETE BARRIER LAYOUT
for Two-Way Traffic

whks
engineers + planners + land surveyors

100-1D
10-18-05

PROJECT DESCRIPTION

This project is for bridge and roadway repairs for the 246' x 55' PPCB Bridge on Ia. 28 over Walnut Creek, 0.4 mi S of I-235.

100-0A
10-28-97

ESTIMATED ROADWAY QUANTITIES
(1 DIVISION PROJECT)

Item No.	Item Code	Item	Unit	Total	As Built Qty.
1	2102-0425071	SPECIAL BACKFILL	CY	2.9	
2	2301-0690202	BRIDGE APPROACH, BR-202	SY	847.9	
3	2412-0000100	LONGITUDINAL GROOVING IN CONCRETE	SY	2189.8	
4	2435-0250700	INTAKE, SW-507	EACH	2	
5	2503-0114215	STORM SEWER GRAVITY MAIN, TRENCHED, REINFORCED CONCRETE PIPE (RCP),	LF	12.0	
		2000D (CLASS III), 15 IN.			
6	2510-6745850	REMOVAL OF PAVEMENT	SY	827.7	
7	2510-6750600	REMOVAL OF INTAKES AND UTILITY ACCESSES	EACH	2	
8	2511-6745900	REMOVAL OF SIDEWALK	SY	5.6	
9	2511-7526006	SIDEWALK, P.C. CONCRETE, 6 IN.	SY	17.6	
10	2518-6910000	SAFETY CLOSURE	EACH	4	
11	2526-8285000	CONSTRUCTION SURVEY	LS	1.00	
12	2527-9263109	PAINTED PAVEMENT MARKING, WATERBORNE OR SOLVENT-BASED	STA	77.34	
13	2527-9263131	WET RETROREFLECTIVE REMOVABLE TAPE MARKINGS	STA	24.66	
14	2527-9263180	PAVEMENT MARKINGS REMOVED	STA	61.24	
15	2528-8400048	TEMPORARY BARRIER RAIL, CONCRETE	LF	1250.0	
16	2528-8445110	TRAFFIC CONTROL	LS	1.00	
17	2528-9109020	TEMPORARY LANE SEPARATOR SYSTEM	LF	3012.0	
18	2602-0000312	PERIMETER AND SLOPE SEDIMENT CONTROL DEVICE, 12 IN. DIA.	LF	400.0	
19	2602-0000320	PERIMETER AND SLOPE SEDIMENT CONTROL DEVICE, 20 IN. DIA.	LF	100.0	
20	2602-0000350	REMOVAL OF PERIMETER AND SLOPE SEDIMENT CONTROL DEVICE	LF	500.0	
21	2602-0000400	TEMPORARY INTAKE OR MANHOLE COVER ASSEMBLY	EACH	2	
22	2602-0000410	MAINTENANCE OF TEMPORARY INTAKE OR MANHOLE COVER ASSEMBLY	EACH	2	
23	2602-0000420	REMOVAL OF TEMPORARY INTAKE OR MANHOLE COVER ASSEMBLY	EACH	2	
24	2602-0000500	OPEN-THROAT CURB INTAKE SEDIMENT FILTER, EC-602	LF	8.0	
25	2602-0000510	MAINTENANCE OF OPEN-THROAT CURB INTAKE SEDIMENT FILTER	EACH	2	
26	2602-0000520	REMOVAL OF OPEN-THROAT CURB INTAKE SEDIMENT FILTER	EACH	2	

100-4A
10-29-02

ESTIMATE REFERENCE INFORMATION

Item No.	Item Code	Description
1	**2102-0425071**	**SPECIAL BACKFILL**
		A. Place 6 inches of special backfill beneath the 6 inch sidewalk.
		B. Excavation for placement of the special backfill shall be incidental to this bid item.
-	-	-
2	**2301-0690202**	**BRIDGE APPROACH, BR-202**
		Refer to Tab. 112-6 and sheets U.1-U.2.
-	-	-
3	**2412-0000100**	**LONGITUDINAL GROOVING IN CONCRETE**
		Refer to Tab. 100-28.
-	-	-
4	**2435-0250700**	**INTAKE, SW-507**
5	**2503-0114215**	**STORM SEWER GRAVITY MAIN, TRENCHED, REINFORCED CONCRETE PIPE (RCP), 2000D (CLASS III), 15 IN.**
		A, Refer to Sheet M.1 for details.
		B. Contractor to verify elevations in the field before ordering intakes.
-	-	-
6	**2510-6745850**	**REMOVAL OF PAVEMENT**
		Refer to Tabs. 102-5 and 110-1.
-	-	-
7	**2510-6750600**	**REMOVAL OF INTAKES AND UTILITY ACCESSES**
		Refer to Tab. 110-15.
-	-	-
8	**2511-6745900**	**REMOVAL OF SIDEWALK**
		Refer to Tab. 110-5.
-	-	-
9	**2511-7526006**	**SIDEWALK, P.C. CONCRETE, 6 IN.**
		A. Refer to Tab. 113-1.
		B. Transition the sidewalk elevation down 6 inches in 15 feet from the bridge.
-	-	-
10	**2518-6910000**	**SAFETY CLOSURE**
		Refer to Tab. 108-13A.
-	-	-
11	**2526-8285000**	**CONSTRUCTION SURVEY**
		The Engineer will not establish or provide primary or secondary control monuments.
		The Contractor shall provide survey locations and elevations relating to existing lines, grades, elevations,
		points, and distances established in the contract documents.
-	-	-
12	**2527-9263109**	**PAINTED PAVEMENT MARKING, WATERBORNE OR SOLVENT-BASED**
13	**2527-9263131**	**WET RETROREFLECTIVE REMOVABLE TAPE MARKINGS**
14	**2527-9263180**	**PAVEMENT MARKINGS REMOVED**
		Refer to Tab. 108-22 and Sheets J.3-J.10.
-	-	-

100-4A
10-29-02

ESTIMATE REFERENCE INFORMATION

Item No.	Item Code	Description
15	**2528-8400048**	**TEMPORARY BARRIER RAIL, CONCRETE**
		Refer to Sheets J.2-J.10 and Tab. 108-33. Includes tapered end sections at each end.
-	-	-
16	**2528-8445110**	**TRAFFIC CONTROL**
		Refer to Traffic Control Plan on Sheet J.1 and sheets J.2-J.10.
-	-	-
17	**2528-9109020**	**TEMPORARY LANE SEPARATOR SYSTEM**
		Refer to Tab. 108-35.
-	-	-
18	**2602-0000312**	**PERIMETER AND SLOPE SEDIMENT CONTROL DEVICE, 12 IN. DIA.**
19	**2602-0000320**	**PERIMETER AND SLOPE SEDIMENT CONTROL DEVICE, 20 IN. DIA.**
		Refer to Tabs. 100-11 and 100-19 and Sheet U.3.
		The tabulations include estimated locations for placement of "Perimeter and Slope Sediment
		Control Device, 12 in. dia." and "Perimeter and Slope Sediment Control Device, 20 in. dia."
		to address erosion to be encountered during construction. Verify the specific locations with
		the Engineer prior to beginning placement. Bid item includes 25% additional quantity for field
		adjustments and replacements. Removal of devices may be completed for areas that have achieved
		70% permanent growth, as approved by the Engineer.
		Use Perimeter and Slope Sediment Control Devices fabricated using wood excelsior.
-	-	-
20	**2602-0000350**	**REMOVAL OF PERIMETER AND SLOPE SEDIMENT CONTROL DEVICE**
21	**2602-0000400**	**TEMPORARY INTAKE OR MANHOLE COVER ASSEMBLY**
22	**2602-0000410**	**MAINTENANCE OF TEMPORARY INTAKE OR MANHOLE COVER ASSEMBLY**
23	**2602-0000420**	**REMOVAL OF TEMPORARY INTAKE OR MANHOLE COVER ASSEMBLY**
		Refer to Sheet U.3 and Tab. 100-11.
-	-	-
24	**2602-0000500**	**OPEN-THROAT CURB INTAKE SEDIMENT FILTER**
25	**2602-0000510**	**MAINTENANCE OF OPEN-THROAT CURB INTAKE SEDIMENT FILTER**
26	**2602-0000520**	**REMOVAL OF OPEN-THROAT CURB INTAKE SEDIMENT FILTER**
		Refer to Standard Road Plan EC-602 and Tab. 100-36.
-	-	-

111-25
10-18-11

INDEX OF TABULATIONS

Tabulation	Tabulation Title	Sheet No.
C Sheets		
100-0A	ESTIMATED ROADWAY QUANTITIES (1 DIVISION PROJECT)	C.1
100-1D	PROJECT DESCRIPTION	C.1
100-4A	ESTIMATE REFERENCE INFORMATION	C.1
100-11	EROSION CONTROL FOR INTAKE OR MANHOLE WELL	C.3
100-19	PERIMETER AND SLOPE SEDIMENT CONTROL DEVICE	C.2
100-28	LONGITUDINAL GROOVING	C.3
100-36	OPEN-THROAT CURB INTAKE SEDIMENT FILTER	C.3
102-5	EXISTING PAVEMENT	C.2
105-4	STANDARD ROAD PLANS	C.2
108-13A	SAFETY CLOSURES	C.2
108-22	PAVEMENT MARKING LINE TYPES	C.4
108-33	TEMPORARY BARRIER RAIL	C.2
108-35	TEMPORARY LANE SEPARATOR SYSTEM	C.2
110-1	REMOVAL OF PAVEMENT	C.2
110-5	SIDEWALK REMOVAL	C.3
110-15	REMOVAL OF INTAKES AND UTILITY ACCESSES	C.2
111-25	INDEX OF TABULATIONS	C.1
112-6	BRIDGE APPROACH SECTION	C.3
113-1A	SIDEWALKS	C.3
J Sheets		
108-23A	TRAFFIC CONTROL PLAN	J.1
108-26A	STAGING NOTES	J.1
108-25	511 TRAVEL RESTRICTIONS	J.1
111-01	COORDINATED OPERATIONS	J.1
113-2	PEDESTRIAN PATH CLOSURES	J.1

102-5
04-18-17

EXISTING PAVEMENT

No.	Location					Year	Type	Project Number	Surface		Base		Subbase		Removal		Coarse Aggregate			Reinforcement	Remarks
	County	Route	Dir. of Travel	Begin Ref. Loc. Sign	End Ref. Loc. Sign				Type	Depth IN	Type	Depth IN	Type	Depth IN	Type	Depth IN	Source	Type	Durability Class	Type	
1	77	Ia. 28	NB	15.6	17.71	1994	PCC	NHS-=28-2(9)--19-77	PCC	10			GSB	6			Ames Mine	C. LST.			

110-1
04-16-13

REMOVAL OF PAVEMENT

Refer to Tabulation 102-5

* Not a Bid Item

Begin Station	End Station	Side	Pavement Type	Area SY	Saw Cut* LF	Remarks
34+09.23	34+78.95	Both	HMA/PCC	413.1	120.8	South Approach
37+25.05	37+94.77	Both	HMA/PCC	414.6	120.8	North Approach

110-15
04-16-13

REMOVAL OF INTAKES AND UTILITY ACCESSES

No.	Location/Description	Type	Remarks
1	Sta. 37+70.1, Lt., Single open throat curb intake	Intake	Stage 1
2	Sta. 37+69.3, Rt., Single open throat curb intake	Intake	Stage 2

105-4
10-18-11

STANDARD ROAD PLANS

The following Standard Road Plans apply to construction work on this project.

Number	Date	Title
BA-401	10-15-19	Temporary Barrier Rail (Precast Concrete)
BR-231	10-17-17	Bridge Approach (Multi-Lane, Curbed Roadway)
DR-121	10-17-17	Connected Pipe Joints
DR-306	10-16-18	Precast Concrete Headwall for Subdrain Outlets
EC-204	04-18-17	Perimeter and Slope Sediment Control Devices
EC-602	10-16-18	Open-Throat Curb Intake Sediment Filter
PM-110	10-16-18	Line Types
PV-101	04-16-19	Joints
PV-102	10-18-16	PCC Curb Details
SI-882	10-18-16	Special Signs for Restricted Width Traffic Control Zones
SW-211	04-17-18	Storm Sewer Pipe Connections
SW-507	04-17-18	Single Open-Throat Intake, Small Box
SW-602	04-21-15	Castings for Storm Sewer Manholes
TC-1	10-15-19	Work Not Affecting Traffic (Two-Lane or Multi-Lane)
TC-202	04-21-15	Work Within 15 ft of Traveled Way
TC-402	04-21-15	Work Within 15 ft of Traveled Way
TC-418	10-15-19	Lane Closure on Divided Highway
TC-423	04-16-19	Closure of Two Adjacent Lanes on Undivided Highway
TC-433	10-17-17	Pavement Marking Operations
TC-601	10-15-19	Pedestrian Detour

108-33
10-15-19

TEMPORARY BARRIER RAIL

Possible Standard: BA-401 Possible Detail: 560-7

* Not a bid item. Anchorage requirements are based on TBR locations shown in the plans. TBR alignments that vary from what is shown in the plans may result in additional TBR sections requiring anchorage.

No.	Station to Station		Length LF	(Select One) Concrete BA-401	Steel 560-7	Anchored* (Y/N)	Modular Glare Screen System (Y/N)	Remarks
1	32+83.43	39+21.14	637.7	X		Yes	No	Stage 1-Refer to Detail 8212 on Sht. B.1
2	32+83.43	39+21.14	637.7	X		Yes	No	Stage 2-Refer to Detail 8212 on Sht. B.1
		Total Length:	1275.4					
		Bid Length:	1250.0					

232-3B
04-16-19

EROSION CONTROL (URBAN SEEDING)

Following the completion of work in a disturbed area and according to the seeding dates in Section 2601 of the Standard Specifications, place seed, fertilizer, and mulch on the disturbed area as follows:

Place seed and fertilize according to the requirements of Article 2601.03,C,4 and Section 4169 of the Standard Specifications.

Place mulch according to the requirements of Articles 2601.03,E,2,a and 4169.07,A of the Standard Specifications.

Preparing the seedbed, furnishing and applying seed, fertilizer, and mulch are incidental to mobilization and will not be paid for separately.

262-5
10-18-05

UTILITIES (POINT 25 PROJECT)

This is a POINT 25 project and is subject to the provisions of IAC 761-115.25.

(DMS) DES MOINES, CITY OF SEWER
Contact Name : Steve Johnson
Contact Phone: 515-237-1359
Contact Email: scjohnson@dmgov.org

(DWR) DES MOINES METRO WASTEWATER
Contact Name : Nick Carter
Contact Phone: 515-323-8135
Contact Email: nfcarter@dmgov.org

(DWW) DES MOINES WATER WORKS
Contact Name : Chris Mlynarik or Jana Hodges
Contact Phone: 515-283-8729
Contact Email: Mlynarik@dmww.com or hodges@dmww.com

(ICN) IOWA COMMUNICATIONS NETWORK
Contact Name : Shannon Marlow
Contact Phone: 800-572-3940
Contact Email: icnoutsideplantiowaonecall@iowa.gov

(M57E) MIDAMER-ELEC
Contact Name : Craig Ranfeld
Contact Phone: 515-252-6632
Contact Email: MECDSMDesignLocates@midamerican.com

(M57G) MIDAMER-GAS
Contact Name : Craig Ranfeld
Contact Phone: 515-252-6632
Contact Email: MECDSMDesignLocates@midamerican.com

(WDM) WEST DES MOINES WATER WORKS
Contact Name : William Mabuce
Contact Phone: 515-222-3510
Contact Email: design_locates@wdmww.com

(WDT) WEST DES MOINES TRAFFIC
Contact Name : Jim Dickinson
Contact Phone: 515-222-3482
Contact Email: Jim.Dickinson@wdm.iowa.gov

100-19
04-19-16

PERIMETER AND SLOPE SEDIMENT CONTROL DEVICE

Possible Standards: EC-204

Location			Length of Installation			Remarks
Begin Station	End Station	Side	9 inch Dia LF	12 inch Dia LF	20 inch Dia LF	
34+05.00	34+75.00	Rt.		70.0		Stage 1
37+15.00	38+00.00	Rt.		90.0		Stage 1
37+69.30	37+69.30	Rt.			40.0	Stage 1
34+05.00	34+90.00	Lt.		90.0		Stage 2
37+30.00	38+00.00	Lt.		70.0		Stage 2
37+70.10	37+70.10	Lt.			40.0	Stage 2
			Subtotal	320.0	80.0	
			+25%	80.0	20.0	
			Bid	400.0	100.0	

108-13A
08-01-08

SAFETY CLOSURES

Refer to Section 2518 of the Standard Specifications

Station	Closure Type Road Qty.	Hazard Qty.	Remarks
32+80.00		1	Stage 1, Rt. Side
39+25.00		1	Stage 1, Rt. Side
32+80.00		1	Stage 2, Lt. Side
39+25.00		1	Stage 2, Lt. Side

108-35
04-17-12

TEMPORARY LANE SEPARATOR SYSTEM

See TC-61

Station to Station		Length LF	Remarks
30+16.00	45+22.00	1506	Stage 1
30+16.00	45+22.00	1506	Stage 2

112-6
04-18-17

BRIDGE APPROACH SECTION

Refer to the BR Series.

* Not a bid item

Location				Approach Pavement					Standard Road Plans BR Series			Subdrain					*	*	*	
Bridge Station	End	Skew Ahead Degrees		(T) Thickness	Pay Length	Non-Reinf. Pavement Area	Single-Reinf. Pavement Area	Double-Reinf. Pavement Area	Approach	Fixed or Movable Abutment	Abutting Pavement	* Perforated Subdrain 4"	* Subdrain Outlet		* Porous Backfill	* Class 'A' Crushed Stone Backfill	* Modified Subbase	* Polymer Grid	* Special Backfill	Remarks
		LEFT	RIGHT	Inches	FT	SY	SY	SY				LF	STA	Side	CY	CY	TON	SY	TON	
36+02.00	South	15		10.0	69.7	187.2	93.7	143.1	BR-202 (1)	Movable	Composite	73.0	34+21.23	Rt.	2.4	0.2	407.572	469.0		
36+02.00	North	15		10.0	69.7	187.6	93.6	142.7	BR-202 (1)	Movable	Composite	65.0	37+82.77	Lt.	2.2	0.2	407.361	468.8		
(1) Modified, see sheets U.1-U.2 for details.						374.8	187.3	285.8	Subtotals											
								847.9	Total											

100-11
04-18-17

EROSION CONTROL FOR INTAKE OR MANHOLE WELL

Possible Detail: 570-5

Location Station	Side	Cover Assembly Installation EACH	Maintenance EACH	Removal EACH	Remarks
37+69.30	Rt.	1	1	1	
37+70.10	Lt.	1	1	1	

100-36
10-16-18

OPEN-THROAT CURB INTAKE SEDIMENT FILTER

Possible Standard: EC-602

Location Station	Side	Installation LF	Maintenance EACH	Removal EACH	Remarks
37+69.30	Rt.	4.0	1	1	
37+70.10	Lt.	4.0	1	1	

110-5
10-20-15

SIDEWALK REMOVAL

* Not a bid item

Begin Station	End Station	Area SY	Saw Cut* LF	Remarks
34+66.58	34+71.58	2.8		Stage 1
37+17.68	37+22.68	2.8		Stage 1

100-28
10-19-10

LONGITUDINAL GROOVING

Location	Total SY	Remarks
36+02	386.7	South Approach
	1416.1	Bridge
	387.0	North Approach

113-1A
04-16-19

SIDEWALKS

See MI-220 and S Sheets

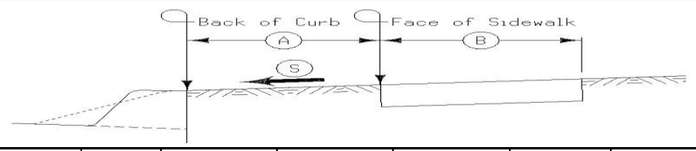

Road Identification	Station to Station		Side	(A) FT	(B) FT	(S) %	4" PCC Sidewalk SY	6" PCC Sidewalk SY	8" PCC Sidewalk SY	10" PCC Sidewalk SY	Detectable Warnings SF	Remarks
Ia. 28	34+56.58	34+71.58	Rt.	0.00	5.30	1.50%		8.8				Drop 6" in 15 feet
Ia. 28	37+17.68	37+32.68	Rt.	0.00	5.30	1.50%		8.8				Drop 6" in 15 feet

PAVEMENT MARKING LINE TYPES

See PM-110

*BCY4 - Place on the same side of the roadway to match existing markings near the project.
**NPY4 - For estimating purposes only. No Passing Zone Lines will be located in the field.
***MNY4 - Factor of 1.00 as value includes number of 4-inch passes to cover median nose area.

BCY4: Broken Centerline (Yellow) @ 0.25 DCY4: Double Centerline (Yellow) @ 2.00 NPY4: No Passing Zone Line (Yellow) @ 1.25 BLW4: Broken Lane Line (White) @ 0.25 ELW4: Edge Line Right (White) @ 1.00
ELY4: Edge Line Left (Yellow) @ 1.00

Location								Length by Line Type (Unfactored)															Remarks
Road ID	Station to Station		Dir. of Travel	Marking Type	Side			BCY4*	DCY4	NPY4**	BLW4	ELW4	ELY4										
					L	C	R	STA	STA	STA	STA	STA	STA	STA	STA	STA	STA	STA	STA	STA	STA	STA	
Stage 1	27+72.00	34+09.00	NB	Removal of Paint			X				6.37												
Ia. 28 (All)	37+95.00	42+27.00	NB	Removal of Paint			X				4.32												
	31+37.00	34+09.00	BOTH	Removal of Paint		X			2.72														
	37+95.00	42+27.00	BOTH	Removal of Paint		X			4.32														
	31+37.00	45+22.00	SB	Removal of Paint	X						13.85												
	27+72.00	30+17.00	NB	Wet Retroreflective Removable Tape			X					2.45											
	30+17.00	31+57.00	NB	Waterborne/Solvent Paint			X					1.40											
	31+57.00	32+97.00	NB	Wet Retroreflective Removable Tape	X		X					1.40											
	32+97.00	33+85.00	NB	Waterborne/Solvent Paint	X							0.88											
	38+20.00	39+47.00	NB	Waterborne/Solvent Paint	X							1.27											
	39+47.00	41+47.00	NB	Wet Retroreflective Removable Tape			X					2.00											
	31+37.00	32+70.00	BOTH	Wet Retroreflective Removable Tape	X				1.33														
	32+70.00	40+87.00	BOTH	Waterborne/Solvent Paint	X				8.17														
	40+87.00	42+27.00	NB	Wet Retroreflective Removable Tape	X								1.40										
	40+87.00	42+77.00	SB	Waterborne/Solvent Paint	X								1.90										
	42+77.00	45+22.00	SB	Wet Retroreflective Removable Tape	X								2.45										
Stage 2	27+72.00	30+17.00	NB	Removal of Removable Tape			X					2.45											
	30+17.00	31+57.00	NB	Removal of Paint			X					1.40											
	31+57.00	32+97.00	NB	Removal of Removable Tape	X		X					1.40											
	32+97.00	33+85.00	NB	Removal of Paint	X							0.88											
	38+20.00	39+47.00	NB	Removal of Paint	X							1.27											
	39+47.00	41+47.00	NB	Removal of Removable Tape			X					2.00											
	31+37.00	32+70.00	BOTH	Removal of Removable Tape	X				1.33														
	32+70.00	34+09.00	BOTH	Removal of Paint	X				1.39														
	37+95.00	40+87.00	BOTH	Removal of Paint	X				2.92														
	40+87.00	42+27.00	NB	Removal of Removable Tape	X								1.40										
	40+87.00	42+77.00	SB	Removal of Paint	X								1.90										
	42+77.00	45+22.00	SB	Removal of Removable Tape	X								2.45										
	30+17.00	31+37.00	NB	Removal of Paint			X						1.20										
	30+17.00	31+37.00	SB	Removal of Paint	X								1.20										
	30+17.00	31+37.00	SB	Removal of Paint	X						1.20												
	27+72.00	30+17.00	NB	Wet Retroreflective Removable Tape			X						2.45										
	30+17.00	31+57.00	NB	Waterborne/Solvent Paint			X						1.40										
	30+17.00	31+57.00	SB	Wet Retroreflective Removable Tape	X		X						1.40										
	31+57.00	39+81.00	BOTH	Waterborne/Solvent Paint			X		8.24														
	39+81.00	41+11.00	BOTH	Wet Retroreflective Removable Tape			X		1.30														
	41+11.00	42+27.00	BOTH	Waterborne/Solvent Paint		X			1.16														
	30+97.00	32+97.00	SB	Wet Retroreflective Removable Tape	X		X					2.00											
	32+97.00	33+85.00	SB	Waterborne/Solvent Paint			X					0.88											
	38+20.00	39+47.00	SB	Waterborne/Solvent Paint			X					1.27											
	39+47.00	40+87.00	SB	Wet Retroreflective Removable Tape	X		X					1.40											
	40+87.00	42+77.00	SB	Waterborne/Solvent Paint	X							1.90											
	42+77.00	45+22.00	SB	Wet Retroreflective Removable Tape	X							2.45											
Final	27+72.00	30+17.00	NB	Removal of Removable Tape			X						2.45										
	30+17.00	31+57.00	NB	Removal of Paint			X						1.40										
	30+17.00	31+57.00	SB	Removal of Removable Tape	X		X						1.40										
	31+57.00	39+81.00	BOTH	Removal of Paint			X		8.24														
	39+81.00	41+11.00	BOTH	Removal of Removable Tape			X		1.30														
	41+11.00	42+27.00	BOTH	Removal of Paint		X			1.16														
	30+97.00	32+97.00	SB	Removal of Removable Tape	X		X					2.00											
	32+97.00	33+85.00	SB	Removal of Paint			X					0.88											
	38+20.00	39+47.00	SB	Removal of Paint			X					1.27											
	39+47.00	40+87.00	SB	Removal of Removable Tape	X		X					1.40											
	40+87.00	42+77.00	SB	Removal of Paint	X							1.90											
	42+77.00	45+22.00	SB	Removal of Removable Tape	X							2.45											
	27+72.00	42+27.00	NB	Waterborne/Solvent Paint			X				14.55												
	30+17.00	31+60.00	NB	Waterborne/Solvent Paint			X						1.43										
	30+17.00	31+60.00	SB	Waterborne/Solvent Paint	X								1.43										
	31+60.00	42+27.00	BOTH	Waterborne/Solvent Paint		X			10.67														
	31+37.00	45+22.00	SB	Waterborne/Solvent Paint	X						13.85												
				Factored Total: Waterborne/Solvent Paint				-	56.48	-	7.10	7.60	6.16	-	-	-	-	-	-	-	-	-	
				Factored Total: Wet Retroreflective Removable Tape				-	5.26	-	-	11.70	7.70	-	-	-	-	-	-	-	-	-	
				Factored Total: Removal of Paint				-	41.50	-	6.44	7.60	5.70	-	-	-	-	-	-	-	-	-	
				Factored Total: Removal of Removable Tape							-	11.70	7.70	-	-	-	-	-	-	-	-	-	
				Bid Quantity: Painted Pavement Markings, Waterborne or Solvent-Based							77.34												
				Bid Quantity: Wet Retroreflective Removable Tape Markings							24.66												
				Bid Quantity: Pavement Markings Removed							61.24												
				Incidental Removal of Removable Tape							24.66												

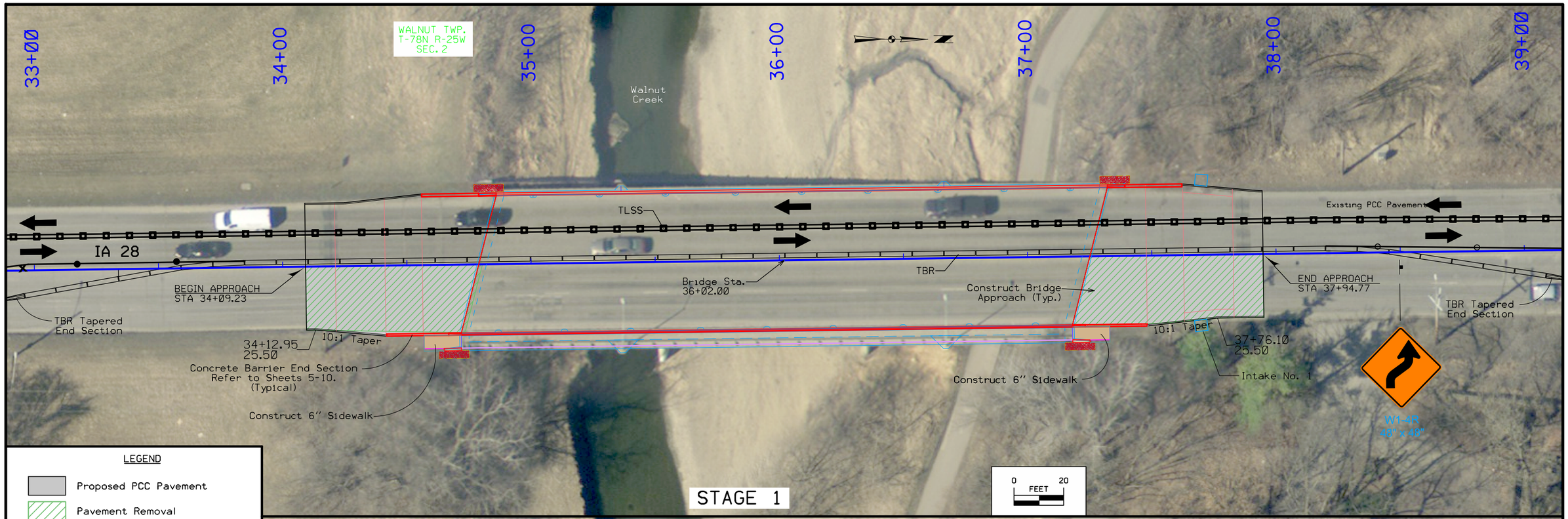

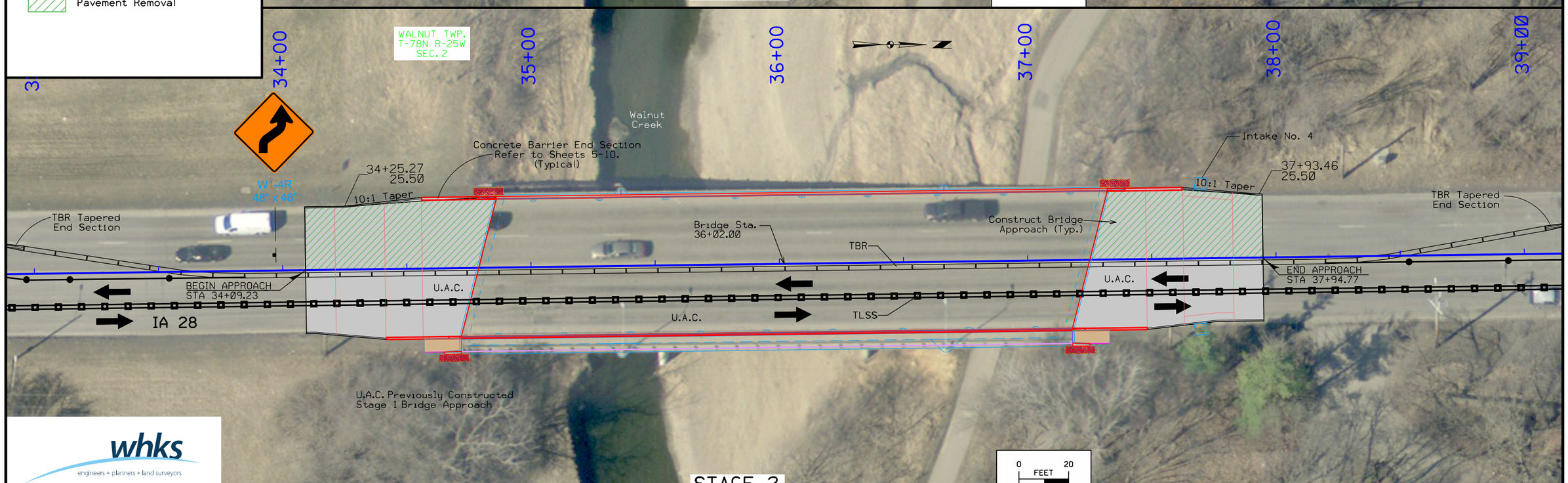

whks
engineers + planners + land surveyors

FILE NO. 31486	ENGLISH	DESIGN TEAM WHKS & CO.	POLK COUNTY	PROJECT NUMBER BRFN-028-2(44)--39-77	SHEET NUMBER D.1

3:23:53 PM 8/13/2019 bbirkland K:\8500.04\Polk420-IA280verWalnutCreek\Plans\77028044.dsn

108-25
10-21-14

511 TRAVEL RESTRICTIONS

Route	Direction	County	Location Description	Feature Crossed	Object Type	Maint. Bridge No., Structure ID, or FHWA No.	Type of Restriction	Existing Measurement	Construction Measurement	Construction Measurement as Signed	Projected As Built Measurement	Remarks
IA 28	NB	Polk	Bridge 900 feet north of Ashworth Road	Walnut Creek	Barrier	FHWA No.: 3826	Horizontal	N/A	24'-7.5"	N/A		
IA 28	NB	Polk	Bridge 900 feet north of Ashworth Road	Walnut Creek	Traffic Control Device	FHWA No.: 3826	Horizontal	N/A	12'	N/A		TLSS

108-23A
08-01-08

TRAFFIC CONTROL PLAN

IA 28 will remain open at all times. At all times at least one lane of traffic will be maintained in each direction. See Sheets J.2-J.10 for details. Standard Road Plan TC-423 is for advance sign placement only.

Placement of TBR, temporary lane separator system and necessary pavement markings for staging shall be restricted to night work only, from 7 pm to 6 am, between the time period beginning 7 pm on Sunday evening to 6 am Friday morning.

There aren't connecting sidewalks within the IA 28 project limits and pedestrian access will be not be maintained.

The trail below the bridge shall be closed during bridge construction regarding the potential for falling debris unless upon agreement with the Engineer, shall implement solutions to protect trail users during construction.

108-26A
08-01-08

STAGING NOTES

Stage 1:

Traffic: Shift southbound traffic to the outside southbound lane.
Shift northbound traffic to the inside southbound lane.

Construction: Construct the east half of the bridge approaches.
Overlay the east half of the bridge.

Stage 2:

Traffic: Shift northbound traffic to the outside northbound lane.
Shift southbound traffic to the inside northbound lane.

Construction: Construct the west half of the bridge approaches.
Overlay the west half of the bridge.

113-2
04-16-13

PEDESTRIAN PATH CLOSURES

Refer to TC-601.

*Assumes 6 foot wide barricade.
Closures may need to be removed and re-established.

Location	Side	Type III Barricades* No.	Remarks
Trail below the north end of the bridge	Left	2	See Tab. 108-23A.
Trail below the north end of the bridge	Right	2	See Tab. 108-23A.

111-01
04-17-12

COORDINATED OPERATIONS

Other work in progress during the same period of time will include the construction of the projects listed. Coordinate operations with those of other contractors working within the same area.

Project	Type of Work
HSIPX-28-2(48)--3L-77	HMA Paved Shoulders

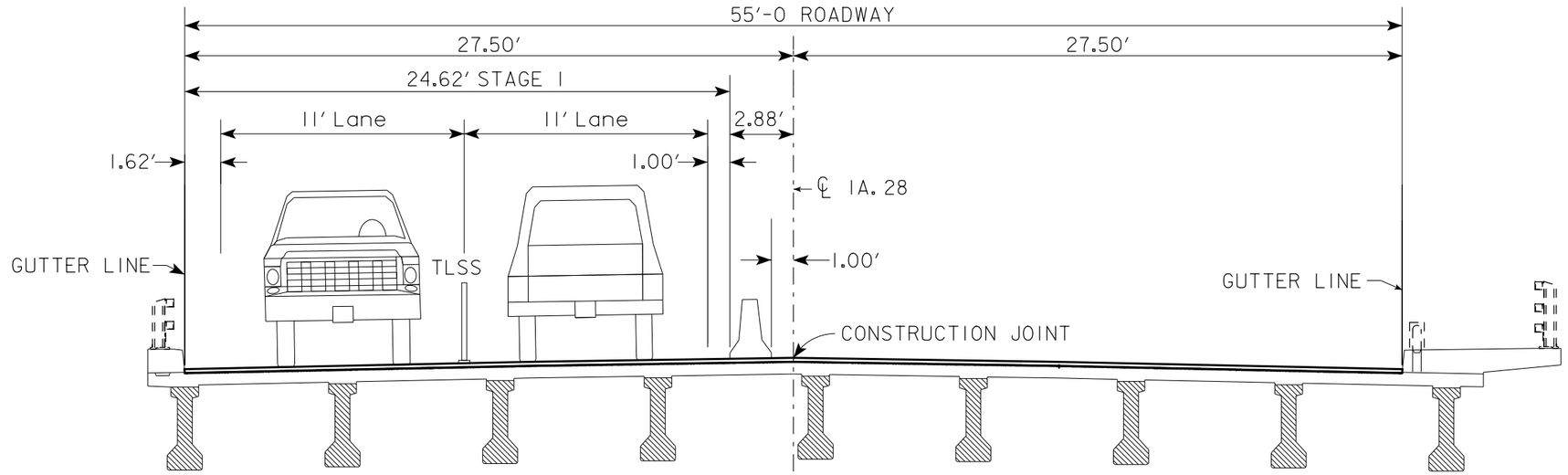

Stage 1
(Looking North)

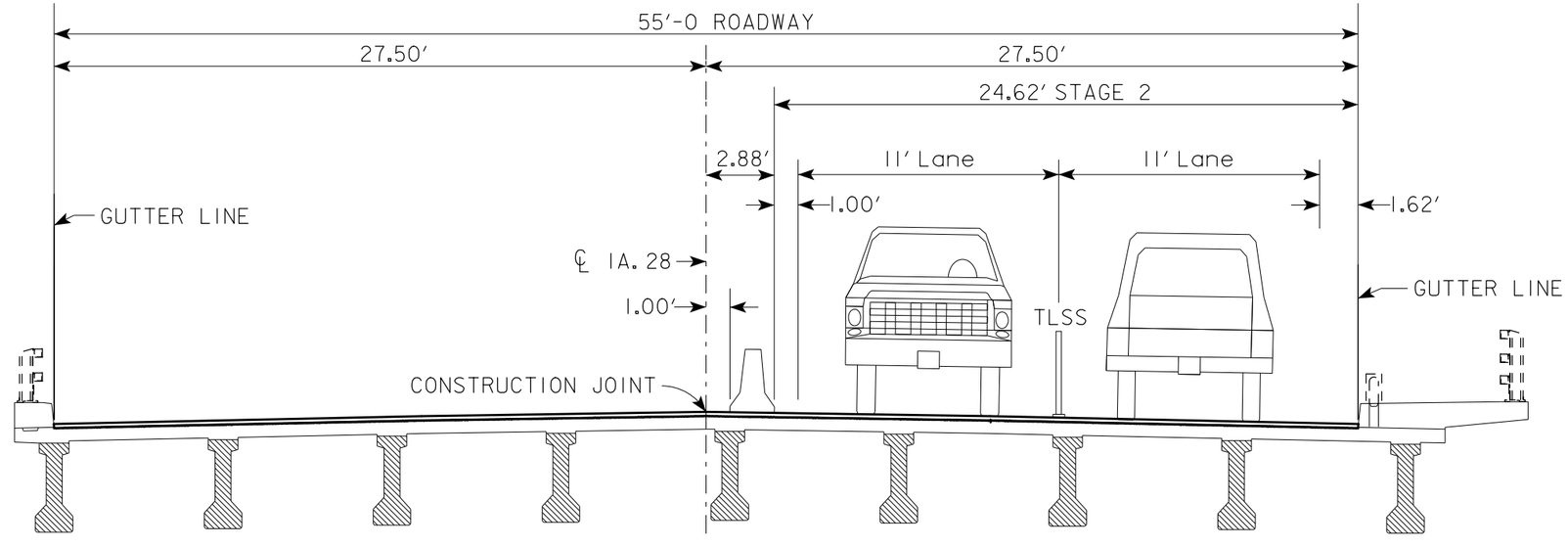

Stage 2
(Looking North)

Traffic Control on Bridge

whks
engineers + planners + land surveyors

FILE NO. 31486	ENGLISH	DESIGN TEAM WHKS & CO.	POLK COUNTY	PROJECT NUMBER BRFN-028-2(44)--39-77	SHEET NUMBER J.2

3:24:06 PM 8/13/2019 bbirkland K:\8500.04\Polk420-IA280verWalnutCreek\Plans\77028044.dsn

Traffic Control
Stage 1

whks
engineers + planners + land surveyors

FILE NO. 31486	ENGLISH	DESIGN TEAM WHKS & CO.	POLK COUNTY	PROJECT NUMBER BRFN-028-2(44)--39-77	SHEET NUMBER J.3

3:24:07 PM 8/13/2019 bbirkland K:\8500.04\Polk420-IA280verWalnutCreek\Plans\77028044.dsn

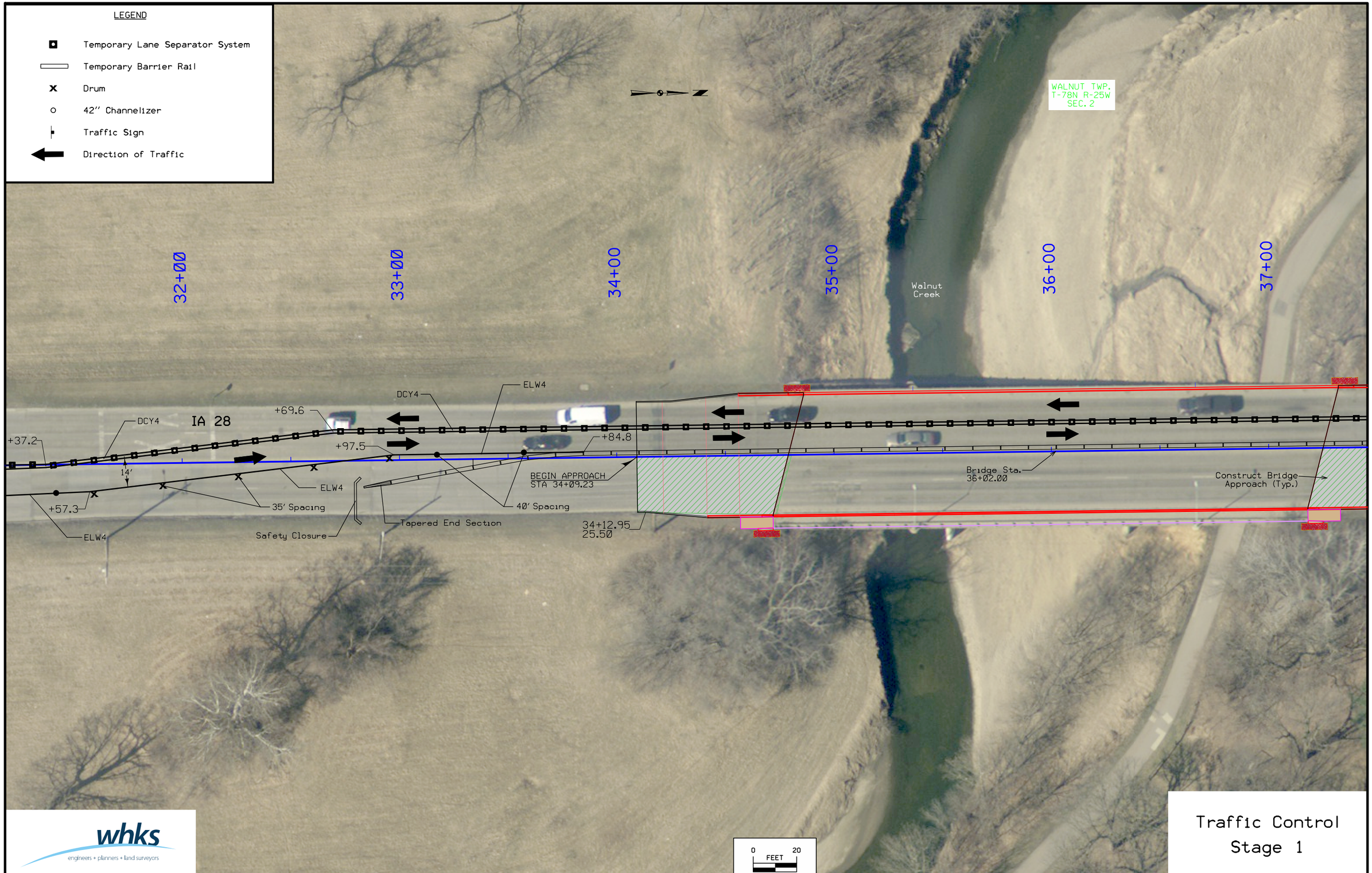

Traffic Control
Stage 1

FILE NO. 31486	ENGLISH	DESIGN TEAM WHKS & CO.	POLK COUNTY	PROJECT NUMBER BRFN-028-2(44)--39-77	SHEET NUMBER J.4

3:24:18 PM 8/13/2019 bbirkland K:\8500.04\Polk420-IA28OverWalnutCreek\Plans\77028044.dsn

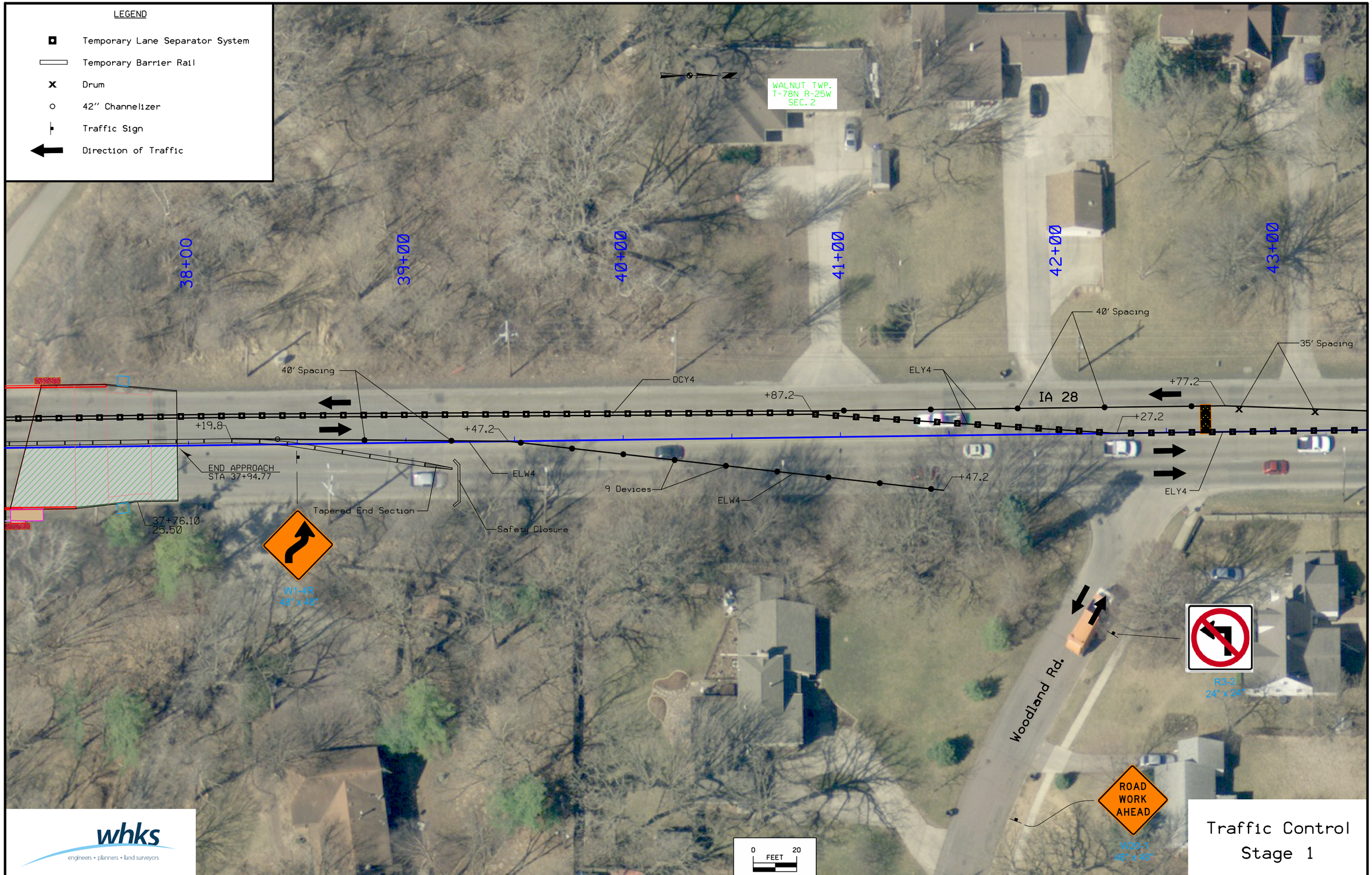

whks
engineers + planners + land surveyors

Traffic Control
Stage 1

FILE NO. 31486	ENGLISH	DESIGN TEAM WHKS & CO.	POLK COUNTY	PROJECT NUMBER BRFN-028-2(44)--39-77	SHEET NUMBER J.5

3:24:21 PM 8/13/2019 bbirkland K:\8500.04\Polk420-IA280verWalnutCreek\Plans\77028044.dsn

Traffic Control
Stage 1

whks
engineers + planners + land surveyors

FILE NO. 31486	ENGLISH	DESIGN TEAM WHKS & CO.	POLK COUNTY	PROJECT NUMBER BRFN-028-2(44)--39-77	SHEET NUMBER J.6

3:24:29 PM 8/13/2019 bbirkland K:\8500.04\Polk420-IA28overWalnutCreek\Plans\77028044.dsn

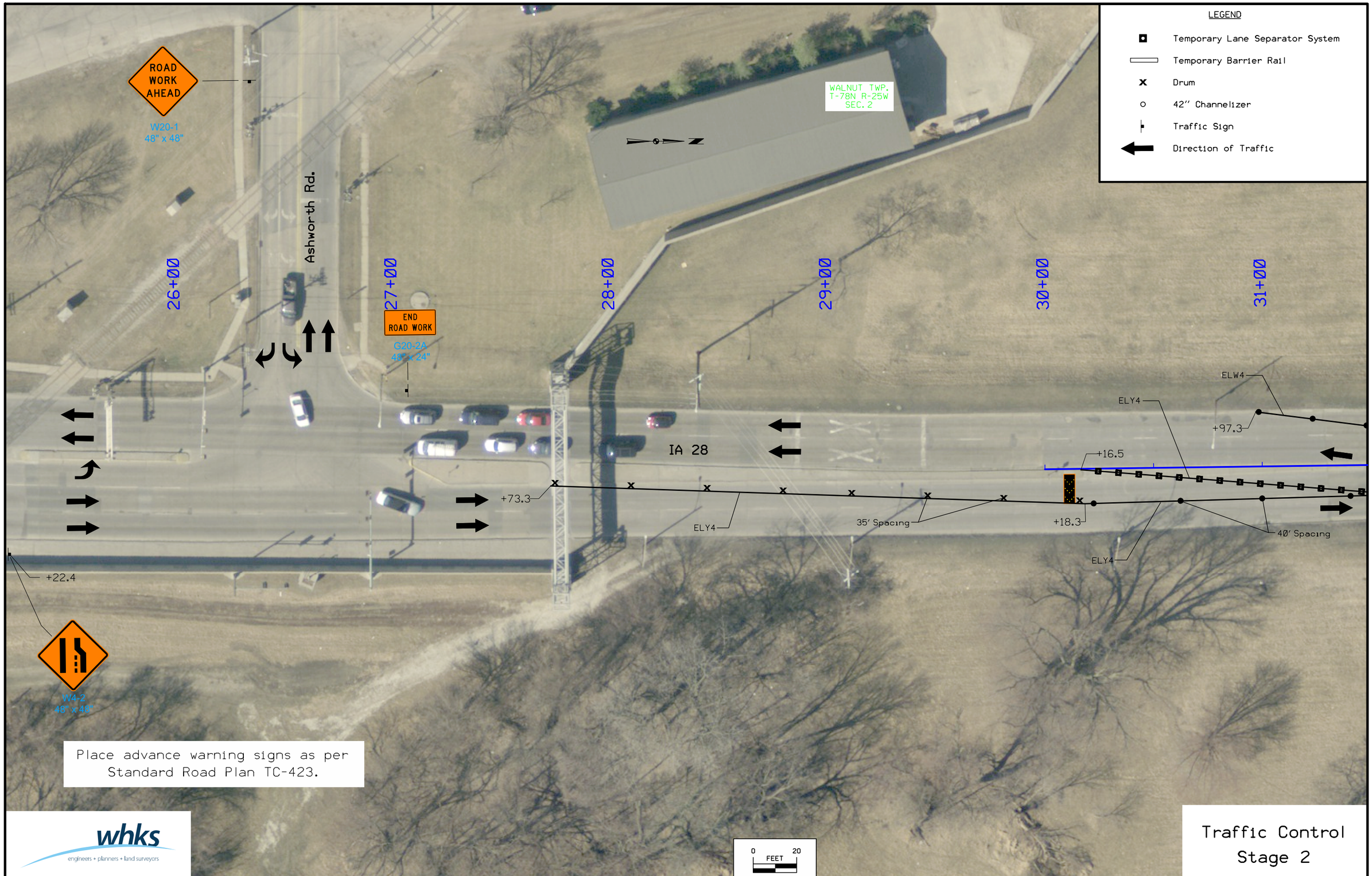

Traffic Control
Stage 2

whks
engineers + planners + land surveyors

FILE NO. 31486	ENGLISH	DESIGN TEAM WHKS & CO.	POLK COUNTY	PROJECT NUMBER BRFN-028-2(44)--39-77	SHEET NUMBER J.7

3:24:37 PM 8/13/2019 bbirkland K:\8500.04\Polk420-IA28overWalnutCreek\Plans\77028044.dsn

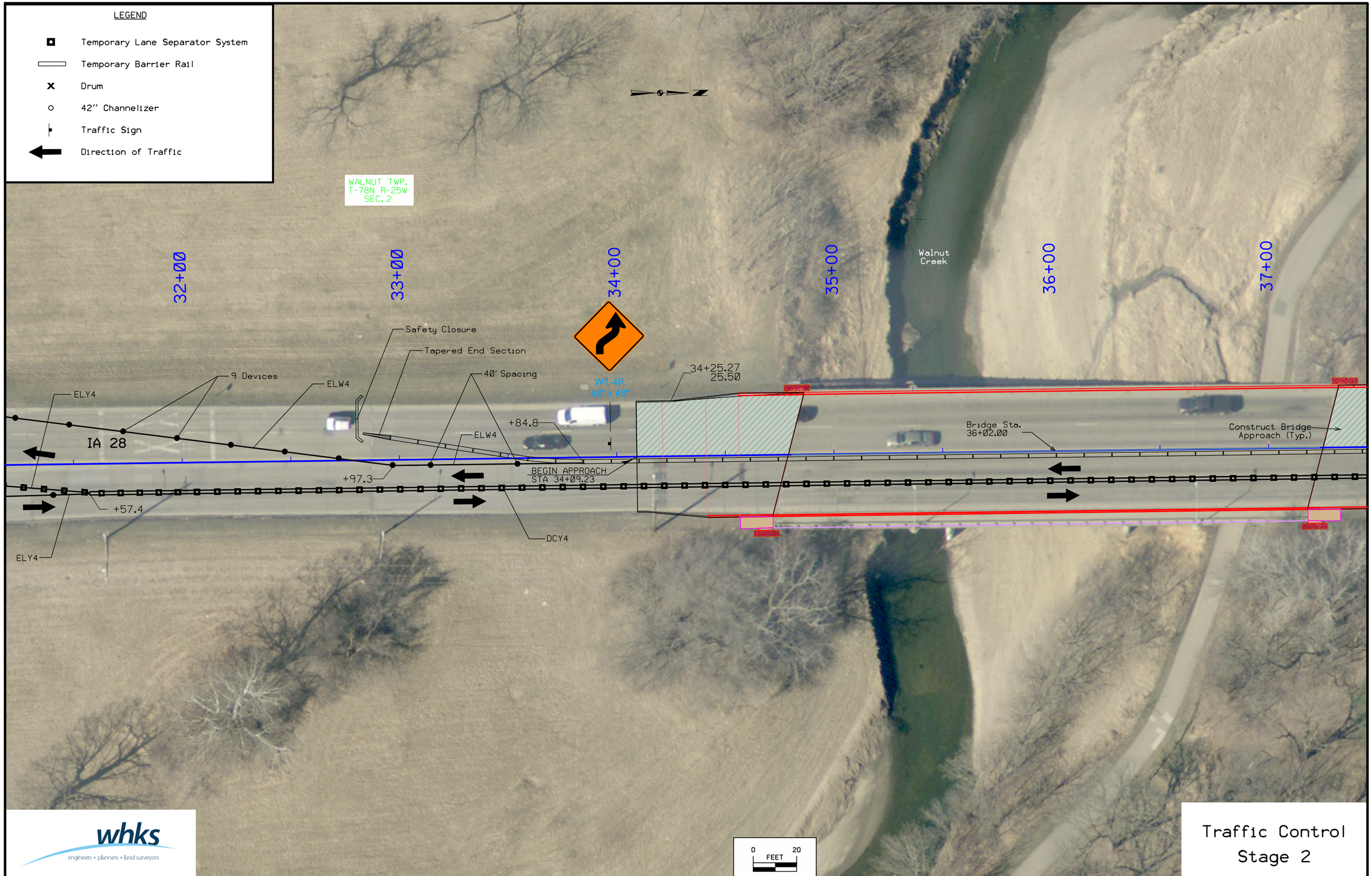

Traffic Control
Stage 2

FILE NO. 31486	ENGLISH	DESIGN TEAM WHKS & CO.	POLK COUNTY	PROJECT NUMBER BRFN-028-2(44)--39-77	SHEET NUMBER J.8

3:24:39 PM 8/13/2019 bbirkland K:\8500.04\Polk420-IA280verWalnutCreek\Plans\77028044.dsn

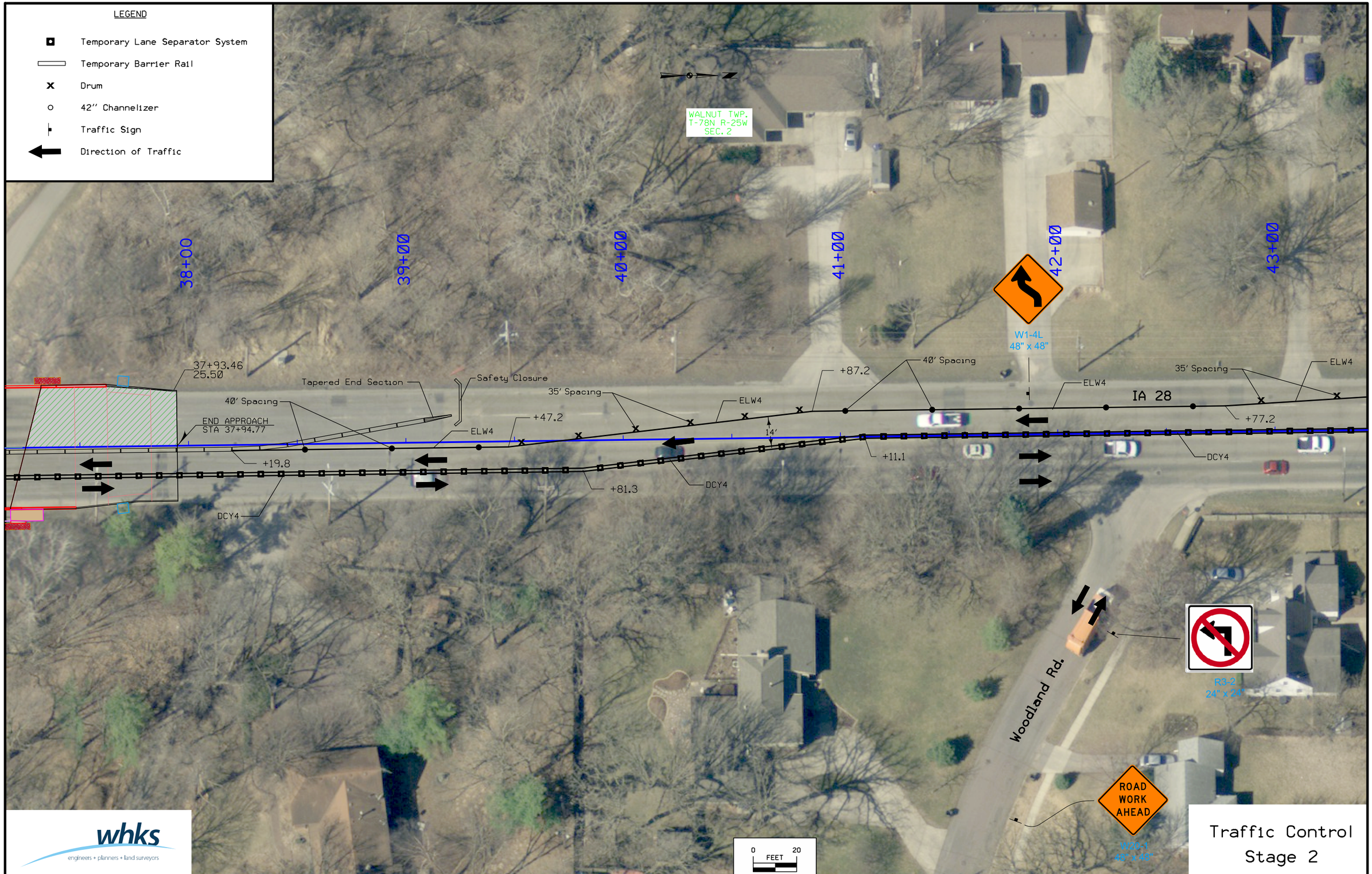

FILE NO. 31486	ENGLISH	DESIGN TEAM WHKS & CO.	POLK COUNTY	PROJECT NUMBER BRFN-028-2(44)--39-77	SHEET NUMBER J.9

3:24:41 PM 8/13/2019 bbirkland K:\8500.04\Polk420-IA280verWalnutCreek\Plans\77028044.dsn

whks
engineers + planners + land surveyors

Traffic Control
Stage 2

FILE NO. 31486	ENGLISH	DESIGN TEAM WHKS & CO.	POLK COUNTY	PROJECT NUMBER BRFN-028-2(44)--39-77	SHEET NUMBER J.10

3:24:44 PM 8/13/2019 bbirkland K:\8500.04\Polk420-IA280verWalnutCreek\Plans\77028044.dsn

STORM SEWER

(1) Diameter or equivalent diameter
* Bid Item
** For SW-545

INTAKES AND UTILITY ACCESSES

No.	Location Station and Offset	*Type or Standard Road Plan	Form Grade Elev.	Bottom Well Elev.	Extension Length** FT	Notes
1	37+69.3, 26.18	SW-507***	(A)	(B)		Stage 1
2	37+69.3, 24.18	Existing 15" 2000D RCP				Stage 1
3	37+70.1, -25.84	Existing 15" 2000D RCP				Stage 2
4	37+70.0, -27.84	SW-507***	(A)	(C)		Stage 2
5	37+70.1, -32.84	Existing 15" 1500D RCP				Stage 2

(A)Tie into adjacent existing pipes. Elevations and slopes to be determined in the field by the Engineer.
(B)Estimated approximately 7.0 feet below form grade. Elevation to be determined in field by the Engineer.
(C)Estimated approximately 7.5 feet below form grade. Elevation to be determined in field by the Engineer.
***Contractor to verify elevations in the field and with Engineer before ordering intakes and setting pipes.

PIPES

Design Length, Slope, and Flowlines are calculated from inside wall to inside wall along CL of pipe. An additional 2 ft length is added to each side of the Design Length to account for estimated length to center of structures.

Line Number	Intake/ Utility Access No. From	Intake/ Utility Access No. To	Class 'D'	(1) Pipe Size IN	Bid* Length FT	Design Length FT	Slope %	Connected Pipe Joint (DR-121) Type	Flow Lines Inlet Elevation	Flow Lines Outlet Elevation	Flow Lines Other Elevation	Pipe Profile Sheet No.	Notes
P-1***	1	2	2000	15	4	2.0	(A)	1	(A)	(A)		N.A.	Stage 1
P-3***	3	4	2000	15	4	2.0	(A)	1	(A)	(A)		N.A.	Stage 2
P-4***	4	5	2000	15	4	2.0	(A)	1	(A)	(A)		N.A.	Stage 2

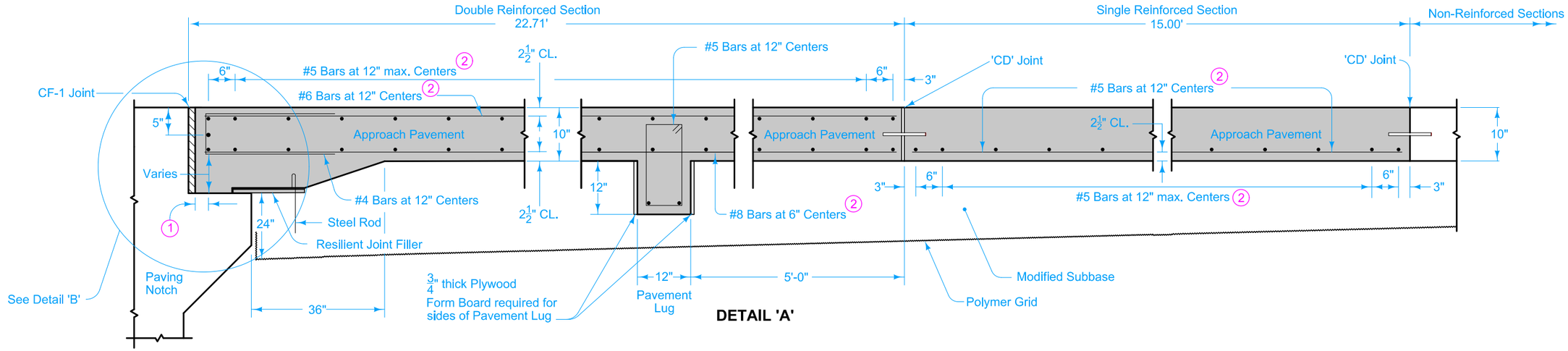

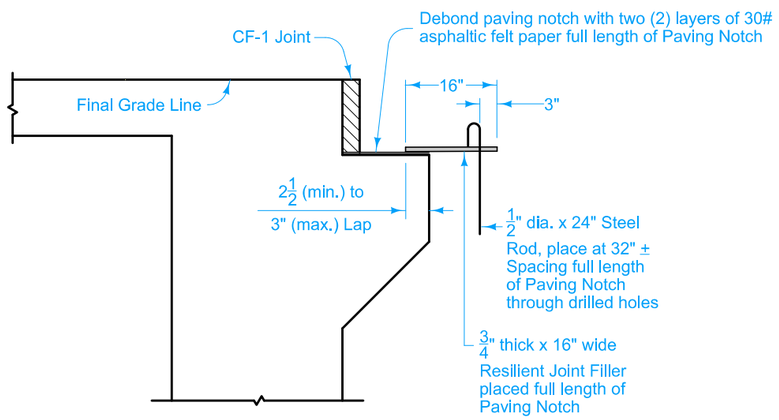

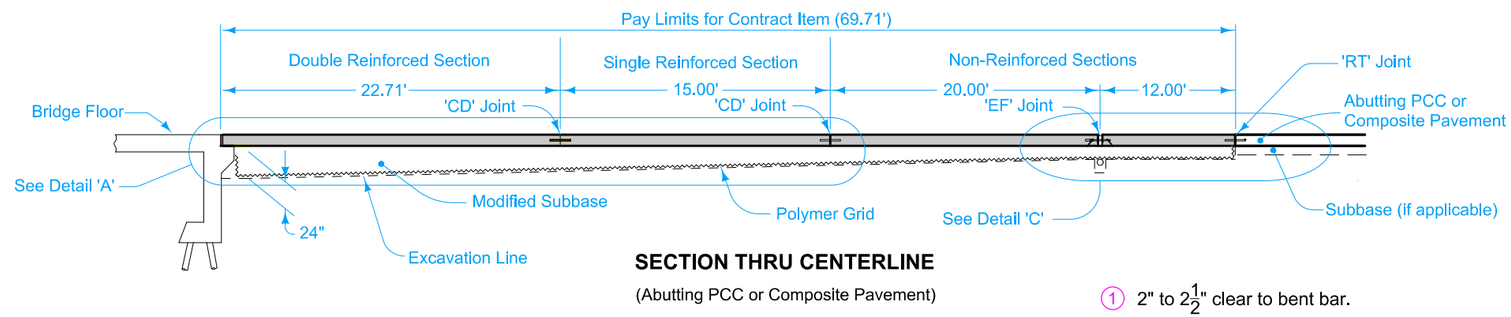

(1) 2" to 2½" clear to bent bar.

(2) Minimum lap length: #5 bars - 18 inches
#6 bars - 27 inches
#8 bars - 48 inches

For joint details, see PV-101.
For curb details, see PV-102.
All Transverse Bars are #5.
See BR-231 for Multi-lane curbed roadway.

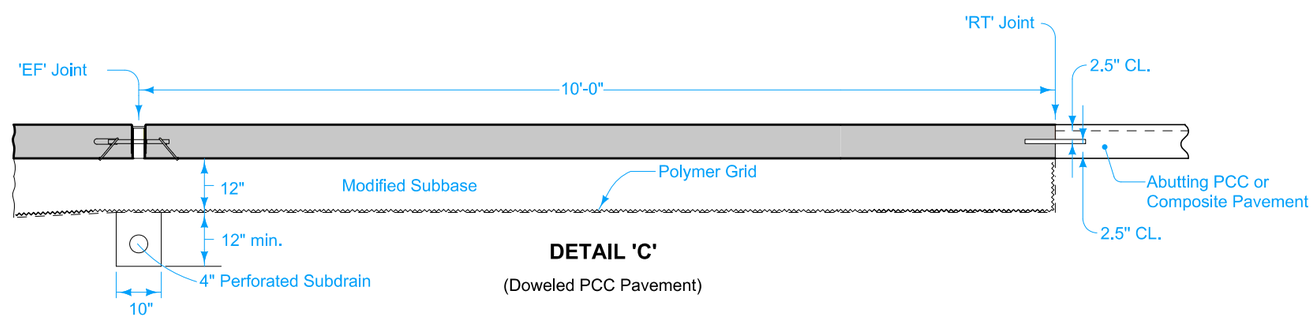

MODIFIED STANDARD ROAD PLAN

REVISION	
1	10-17-17

BR-202

SHEET 1 of 2

MODIFICATIONS: Modified Details Pertaining to Bridge End Post Geometry.

DOUBLE REINFORCED 10" APPROACH WITH VARIABLE DEPTH PAVING NOTCH

whks engineers + planners + land surveyors

FILE NO. 31486	ENGLISH	DESIGN TEAM WHKS & CO.	POLK COUNTY	PROJECT NUMBER BRFN-028-2(44)--39-77	SHEET NUMBER U.1

3:24:46 PM 8/13/2019 bbirkland K:\8500.04\Polk420-IA280verWalnutCreek\Plans\77028044.dsn

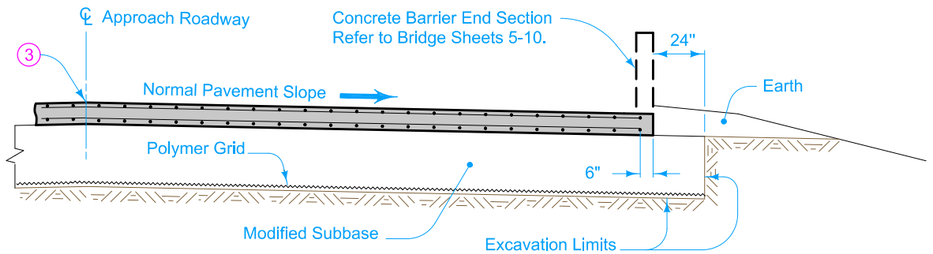

SECTION A-A 4

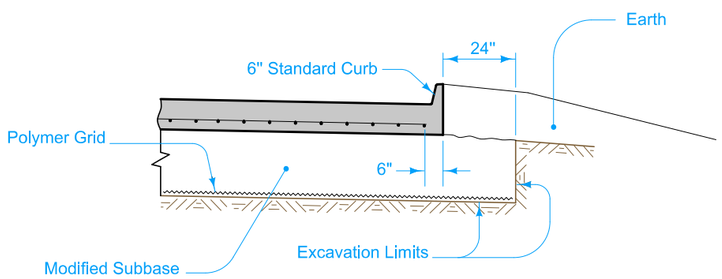

SECTION B-B 4

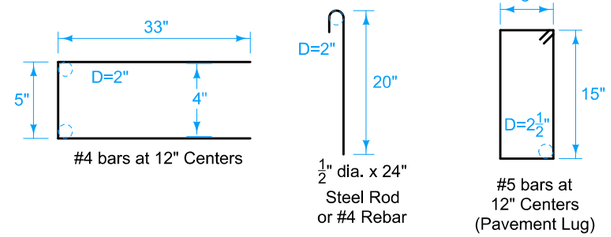

BENT BAR SHAPES

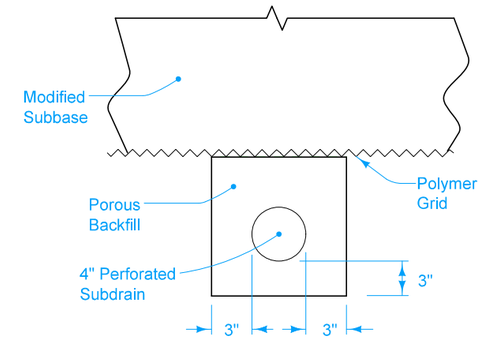

4" SUBDRAIN LOCATION

3 Longitudinal Joint (PV-101):
Two pours - Use 'KS-2' Joint.

4 From BR-231.

MODIFIED STANDARD ROAD PLAN

REVISION	
1	10-17-17

BR-202

SHEET 2 of 2

MODIFICATIONS: Modified Details Pertaining to Bridge End Post Geometry.

DOUBLE REINFORCED 10" APPROACH WITH VARIABLE DEPTH PAVING NOTCH

whks engineers + planners + land surveyors

FILE NO. 31486	ENGLISH	DESIGN TEAM WHKS & CO.	POLK COUNTY	PROJECT NUMBER BRFN-028-2(44)--39-77	SHEET NUMBER U.2

3:24:47 PM 8/13/2019 bbirkland K:\8500.04\Polk420-IA280verWalnutCreek\Plans\77028044.dsn

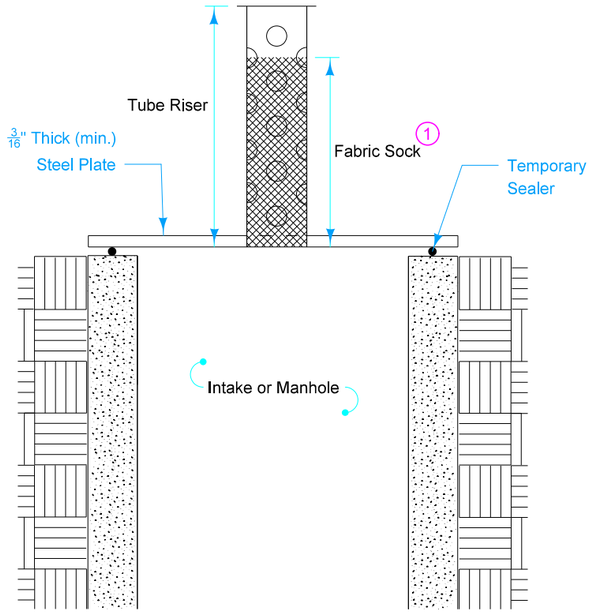

SECTION VIEW

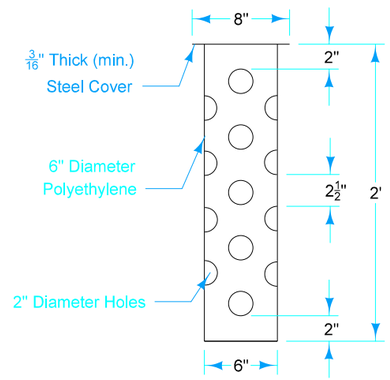

TUBE RISER 2

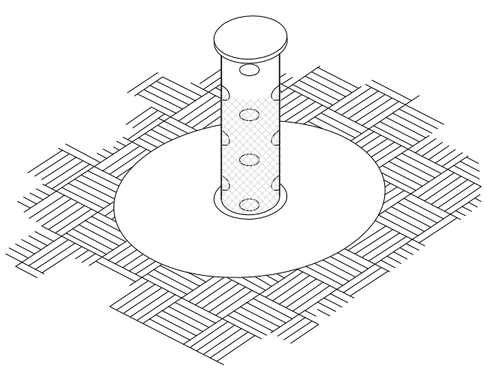

ISOMETRIC VIEW
(Circular)

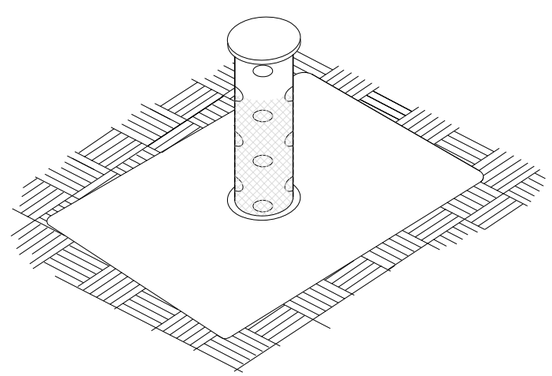

ISOMETRIC VIEW
(Rectangular)

TEMPORARY INTAKE OR MANHOLE COVER ASSEMBLY

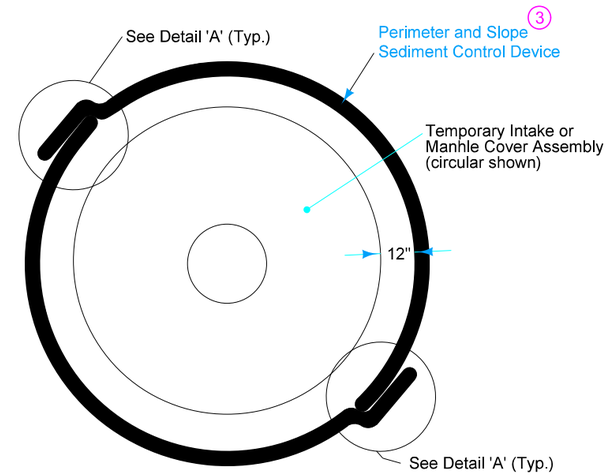

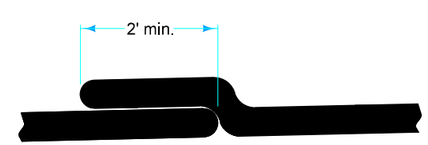

DETAIL 'A' 4
(Overlap Joint)

PERIMETER AND SLOPE SEDIMENT CONTROL

Method of Measurement for Temporary Intake or Manhole Cover Assembly will be by count.

Basis of Payment for Temporary Intake or Manhole Cover Assembly will be at the contract unit price for each device installed.

Method of Measurement for Maintenance of Temporary Intake or Manhole Cover Assembly will be by count.

Basis of Payment for Maintenance of Temporary Intake or Manhole Cover Assembly will be at the contract unit price for each occurance. Payment is full compensation for inspecting fabric sock and replacing when flow capicity has been reduced to 50%.

Method of Measurment for Removal of Temporary Intake or Manhole Cover Assembly will be by count.

Basis of Payment for Removal of Temporary Intake or Manhole Cover Assembly will be at the contract unit price for each device removed.

1. Wrap fabric sock around tube riser. Use fabric complying with Article 4196.01, B, 1 with a minimum flow rate of 90 gallons per minute per square foot. Ensure top of sock is below form grade elevation.
2. Tube riser may be such that it can be pushed down and pulled up.
3. Place Perimeter and Slope Sediment Control Devices around all intake or manhole wells. Use 20 inch diameter device.
4. Extra material required to install overlaps will not be included in the installation length.

Possible Contract Items:
- Temporary Intake or Manhole Cover Assembly
- Maintenance of Temporary Intake or Manhole Cover Assembly
- Removal of Temporary Intake or Manhole Cover Assembly
- Perimeter and Slope Sediment Control Device

Possible Tabulations:
- 100-11
- 100-19

REVISION	
1	04-18-17

ROAD DESIGN DETAIL

570-5

SHEET 1 of 1

REVISIONS: Add bid items for maintenance and removal. Added basis of payment and method of measurement.

EROSION CONTROL FOR INTAKE OR MANHOLE WELL