PCC OVERLAY

FM-C070(67)--55-70

MUSCATINE CO

LETTING DATE

NOVEMBER 19, 2019

IOWA ONE CALL
1-800-292-8989 | 811
www.iowaonecall.com

SHEET TOTAL 19

Project No. FM-C070(67)--55-70

IOWA DEPARTMENT OF TRANSPORTATION
Highway Division

PLANS OF PROPOSED IMPROVEMENT ON THE

FARM-TO-MARKET SYSTEM
MUSCATINE COUNTY

PCC OVERLAY

On 231st Street G28

From Independence Avenue X43 to High Prairie Road

Scales: As Noted

Refer to the Proposal Form for list of Applicable Specifications.

Value Engineering Saves. Refer to Article 1105.15 of the Specifications.

For Tabulation of Standard Road Plans, Refer to Sheet No. C1.

For List of Utilities, Refer to Sheet No. C1.

INDEX OF SHEETS

No.	Description
A1	TITLE SHEET
B1-B2	TYPICAL CROSS SECTIONS AND DESIGN DETAILS
C1-C4	ESTIMATE OF QUANTITIES, REFERENCE INFORMATION, AND TABULATIONS
G1-G7	SURVEY INFORMATION, CONTROL POINT, AND ALIGNMENT DATA
J1	TRAFFIC CONTROL DETAILS AND STAGING NOTES
J2-J5	DETOUR DETAILS

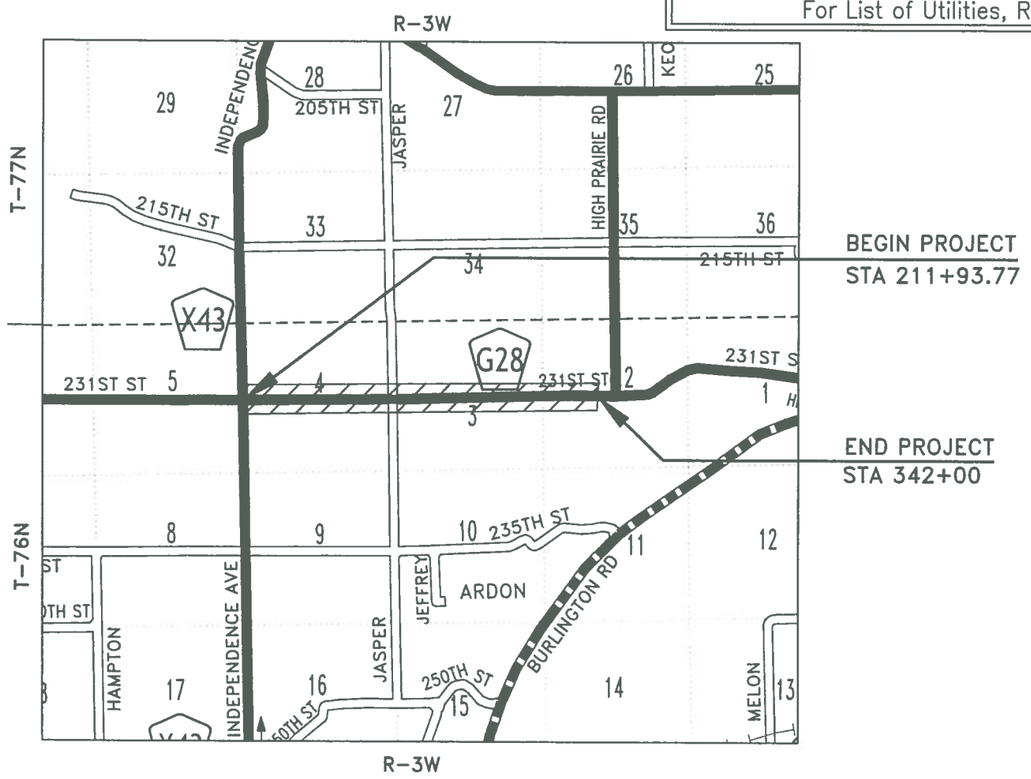

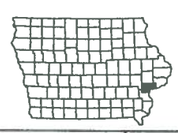

Location Map Scale
0 0.5 1 1.5 miles

04-30-02		101-4
DESIGN DATA RURAL		
2014 AADT	870	V.P.D.
2038 AADT	1050	V.P.D.
20 DHV		V.P.H.
TRUCKS	15	%
Total Design ESALs		

MILEAGE SUMMARY

Div.	Location	Lin. Ft.	Miles
	STA 211+93.77 TO STA 342+00	13,006.23	2.463
	NET LENGTH OF PROJECT	13,006.23	2.463

Approved By:
The Muscatine County Board of Supervisors

INDEX OF SEALS

SHT. NO.	NAME	TYPE
A1	Keith White	Primary Signature Block

LICENSED PROFESSIONAL ENGINEER
KEITH L. WHITE
9530
IOWA

I hereby certify that this engineering document was prepared by me or under my direct personal supervision and that I am a duly licensed Professional Engineer under the laws of the State of Iowa.

Signed: Date: 11/19/18

Keith L. White
Printed or Typed Name

My license renewal date is December 31, 2019.

Pages or sheets covered by this seal: ALL PAGES

FILE NO.	NO.	ENGLISH	DESIGN TEAM	WHITE\MICHAEL\HORESOWSKY	MUSCATINE COUNTY	PROJECT NUMBER	FM-C070(67)--55-70	SHEET NUMBER	A1	REVISED

M:\PCC Paving\FM-C070(67)--55-70_231st_St-G28\DWG\A Plan Sheet.dwg, A1, 11/14/2018 1:55:36 PM

* Estimated Thickness. Actual pavement thickness varies throughout this overlay area.

** Subbase is 6" Rolled Stone over 4" Soil/Agg.

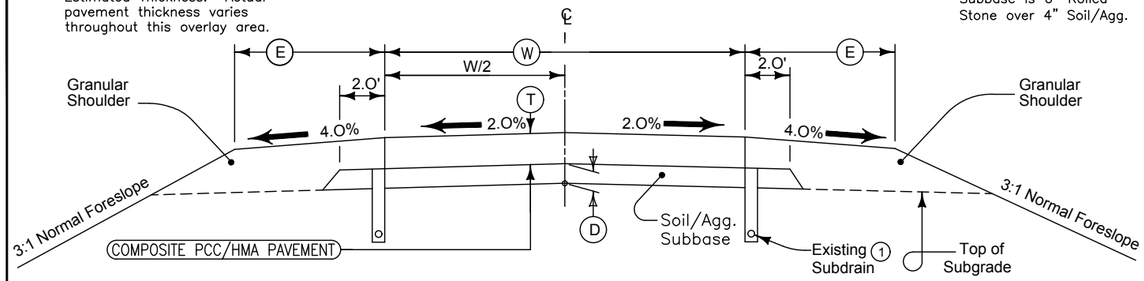

EXISTING CROSS SECTION, 231st STREET, COMPOSITE PCC/HMA PAVEMENT

Note:
Normal sections shown may be appropriately modified for areas specifically designated by the Engineer such as inter-**sections or superelevated curves.**

(1) Existing Subdrain was placed 36" below top of HMA paving 11' each way of centerline.

LOCATION			(T) Inches	(D) Inches	(E) Feet	(W) Feet	SHOULDER TYPE
ROAD IDENTIFICATION	STATION TO STATION						
231st STREET G28	211+93.77	211+99	*20	**10	6	26	GRANULAR
231st STREET G28	211+99	212+07.71	*20	**10	6	22	GRANULAR

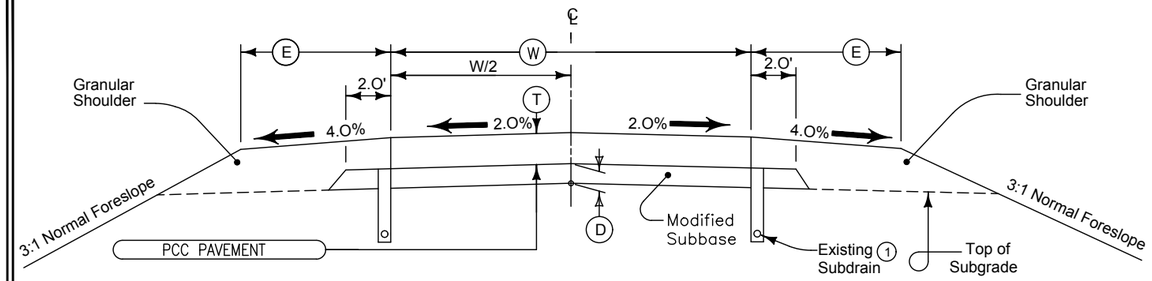

EXISTING CROSS SECTION, 231st STREET, PCC PAVEMENT

Note:
Normal sections shown may be appropriately modified for areas specifically designated by the Engineer such as inter-**sections or superelevated curves.**

(1) Existing Subdrain was placed 36" below top of HMA paving 11' each way of centerline.

LOCATION			(T) Inches	(D) Inches	(E) Feet	(W) Feet	SHOULDER TYPE
ROAD IDENTIFICATION	STATION TO STATION						
231st STREET G28	212+07.71	213+07.32	8	10	6–8	22	GRANULAR

** Subbase is 6" Rolled Stone over 4" Soil/Agg.

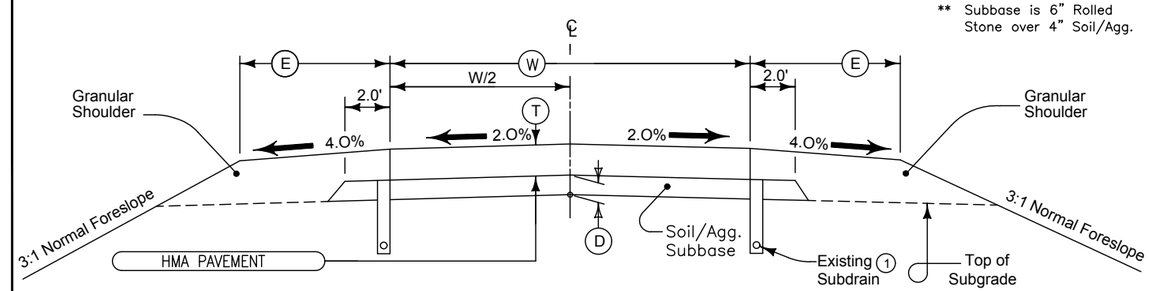

EXISTING CROSS SECTION, 231st STREET, HMA PAVEMENT

Note:
Normal sections shown may be appropriately modified for areas specifically designated by the Engineer such as inter-**sections or superelevated curves.**

(1) Existing Subdrain was placed 36" below top of HMA paving 11' each way of centerline.

LOCATION			(T) Inches	(D) Inches	(E) Feet	(W) Feet	SHOULDER TYPE
ROAD IDENTIFICATION	STATION TO STATION						
231st STREET G28	213+07.32	342+00	8	**10	8	22	GRANULAR

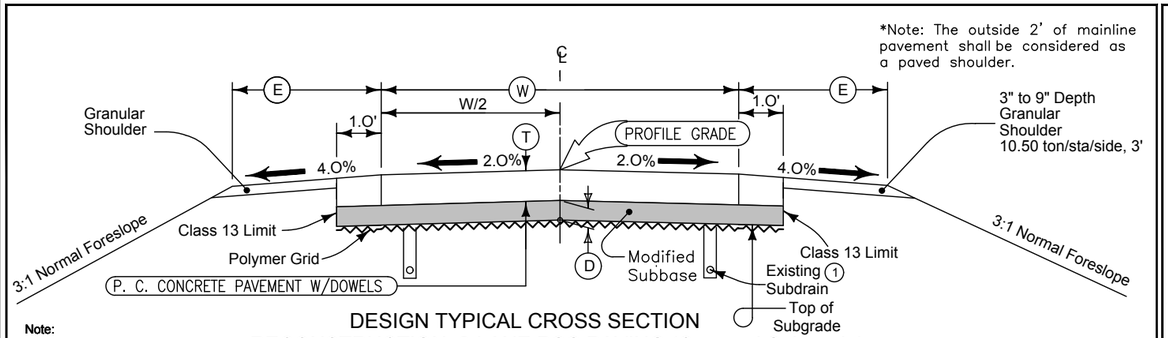

DESIGN TYPICAL CROSS SECTION
RECONSTRUCTION, 2-LANE PCC PAVING (Crowned Subgrade)

Note:
Normal sections shown may be appropriately modified for areas specifically designated by the Engineer such as inter-**sections or superelevated curves.**

① Existing Subdrain was placed 36" below top of HMA paving 11' each way of centerline.

LOCATION			T Inches	D Inches	E Feet	W Feet	SHOULDER TYPE
ROAD IDENTIFICATION	STATION TO STATION						
231st Street G28	211+93.77	216+50	9	10	3	26	TYPE B, GRANULAR

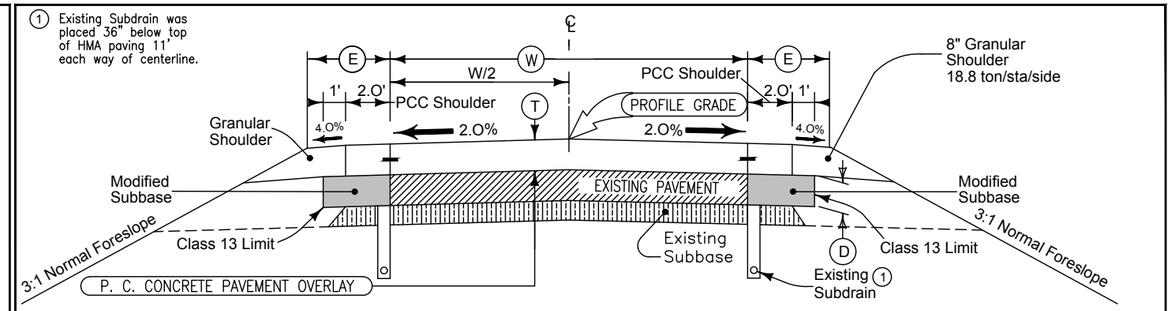

DESIGN TYPICAL CROSS SECTION
WHITETOPPING OVERLAY, 2-LANE PCC PAVING, WITH 2' PCC SHOULDER

Note:
Normal sections shown may be appropriately modified for areas specifically designated by the Engineer such as inter-**sections or superelevated curves.**

LOCATION			T Inches	D Inches	E Feet	W Feet	SHOULDER TYPE
ROAD IDENTIFICATION	STATION TO STATION						
231st Street G28	216+50	342+00	8	6	5	22	PCC & TYPE B, GRANULAR

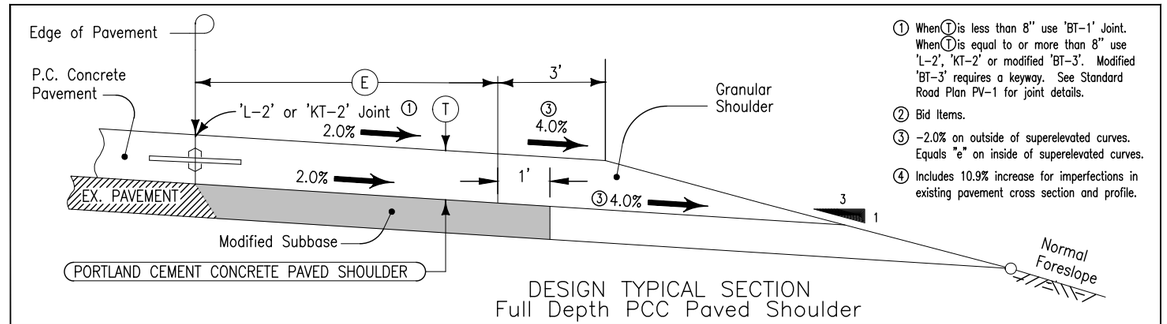

① When (T) is less than 8" use 'BT-1' Joint. When (T) is equal to or more than 8" use 'L-2', 'KT-2' or modified 'BT-3'. Modified 'BT-3' requires a keyway. See Standard Road Plan PV-1 for joint details.

② Bid Items.

③ -2.0% on outside of superelevated curves. Equals "e" on inside of superelevated curves.

④ Includes 10.9% increase for imperfections in existing pavement cross section and profile.

DESIGN TYPICAL SECTION
Full Depth PCC Paved Shoulder

LOCATION				DIMENSIONS		QUANTITIES			
ROAD IDENTIFICATION	STATION TO STATION		SIDE	T Inches	E Feet	SURFACE AREA Sq. Yds. ②	VOLUME ④ Cu. Yds. ②	MODIFIED SUBBASE Cu. Yds. ②	CLASS 13 EXCAV. Cu. Yds. ②
231st Street G28	216+50	342+00	LT	8	2	2,788.9	691	697	695
231st Street G28	216+50	342+00	RT	8	2	2,788.9	691	697	695
					TOTALS	5,577.8	1,382	1,394	1,390

100-0A
10-28-97

ESTIMATED ROADWAY QUANTITIES
(1 DIVISION PROJECT)

Item No.	Item Code	Item	Unit	Total	As Built Qty.
1	2102-2713090	EXCAVATION, CLASS 13, WASTE	CY	1,916.0	
2	2113-0001100	SUBGRADE STABILIZATION MATERIAL, POLYMER GRID	SY	1,419.4	
3	2115-0100000	MODIFIED SUBBASE	CY	1,917.0	
4	2121-7425020	GRANULAR SHOULDERS, TYPE B	TON	5,329.0	
5	2213-7100400	RELOCATION OF MAIL BOXES	EACH	11	
6	2301-1033090	STANDARD OR SLIP FORM PORTLAND CEMENT CONCRETE PAVEMENT, CLASS C,	SY	1,786.8	
		CLASS 3 DURABILITY, 9 IN.			
7	2301-9091000	RUMBLE STRIP PANEL (PCC SURFACE)	EACH	2	
8	2310-5151040	PORTLAND CEMENT CONCRETE OVERLAY, FURNISH ONLY	CY	8,981.0	
9	2310-5151551	PORTLAND CEMENT CONCRETE OVERLAY, PLACEMENT ONLY (WHITE TOPPING)	SY	36,255.6	
10	2310-8300550	PAVEMENT INTERLAYER GEOTEXTILE	SY	707.8	
11	2312-8260051	GRANULAR SURFACING ON ROAD, CLASS A CRUSHED STONE	TON	60.0	
12	2315-8275025	SURFACING, DRIVEWAY, CLASS A CRUSHED STONE	TON	300.0	
13	2316-0000110	PAYMENT ADJUSTMENT INCENTIVE/DISINCENTIVE FOR PCC PAVEMENT SMOOTHNESS	EACH	28,532	
		(BY SCHEDULE)			
14	2510-6745850	REMOVAL OF PAVEMENT	SY	1,137.1	
15	2518-6910000	SAFETY CLOSURE	EACH	8	
16	2526-8285000	CONSTRUCTION SURVEY	LS	1.00	
17	2527-9263117	PAINTED PAVEMENT MARKINGS, DURABLE	STA	479.43	
18	2528-8445110	TRAFFIC CONTROL	LS	1.00	
19	2528-8445113	FLAGGERS	EACH	See Proposal	
20	2533-4980005	MOBILIZATION	LS	1.00	

100-1D
10-18-05

PROJECT DESCRIPTION

THIS PROJECT IS A PCC WHITETOPPING AND MINOR PCC RECONSTRUCTION OF AN EXISTING HMA PAVEMENT ALONG 231ST STREET G28.

THIS PROJECT WILL BE COMPLETED IN TWO STAGES WITH THE INTENT OF MAINTAINING ACCESS TO RESIDENTS AND BUSINESSES.

100-27
04-17-18

PROPOSED POSTED SPEED LIMIT

Road Identification	Begin Station	End Station	Proposed Posted Speed Limit			Remarks
			35 or less	40 - 45	over 45	
231ST STREET	211+93.77	342+00.00			55	

MUSCATINE-2
04-16-13

TABULATION OF UTILITIES

(CTLIA01) CENTURYLINK
Contact Name : Tom Sturmer
Contact Phone: 7205788090
Contact Email: Thomas.sturmer@centurylink.com

(ELP) EASTERN IOWA LIGHT & POWER
Contact Name : Dennis Anderson
Contact Phone: 5637322211
Contact Email: dennis.anderson@easterniowa.com

MUSCATINE-10
10-16-12

GENERAL NOTES

THE CONTRACTOR SHALL NOT OPERATE ANY EQUIPMENT EXCEEDING LEGAL LOADS ON ANY AND ALL COUNTY ROADS. ALL CONSTRUCTION EQUIPMENT AND VEHICLES WILL OBEY TRAFFIC CONTROL REGULATIONS AT ALL TIMES. THIS INCLUDES ALL TRUCKS DELIVERING PCC MIX TO THE PAVING MACHINE.

IT SHALL BE THE CONTRACTOR'S RESPONSIBILITY TO BE FAMILIAR WITH THE PROJECT FOR LOCATION OF UTILITIES, DRAINAGE OR OTHER FACILITIES IN THE CONSTRUCTION AREA. ANY DAMAGE TO SUCH FACILITIES, DUE TO THE CONTRACTOR'S CARELESSNESS, SHALL BE CORRECTED AT HIS/HER EXPENSE WITHOUT COST TO MUSCATINE COUNTY. NO CLAIMS FOR ADDITIONAL COMPENSATION WILL BE ALLOWED FOR ANY INTERFERENCE OR DELAY CAUSED BY CARELESSNESS. WORK DAYS WILL CONTINUE TO BE CHARGED DURING REPAIR OF DAMAGES.

IT SHALL BE THE CONTRACTOR’S RESPONSIBILITY TO PROVIDE A WASTE AREA OR DISPOSAL SITES FOR EXCESS MATERIAL WHICH IS NOT DESIREABLE TO BE INCORPORATED INTO THE PROJECT. NO PAYMENT FOR OVERHAUL WILL BE ALLOWED FOR MATERIAL HAULED TO THESE SITES.

MUSCATINE-3
04-16-13

CERTIFIED PLANT INSPECTION NOTE

CERTIFIED PLANT INSPECTION PER SPECIFICATION 2521 SHALL APPLY TO THIS PROJECT.

MUSCATINE-4
04-16-13

PRECONSTRUCTION MEETING NOTE

A PRE-CONSTRUCTION CONFERENCE WITH THE SUCCESSFUL BIDDER WILL BE HELD NOT LESS THAN TWO WEEKS BEFORE STARTING THE PROJECT AND SHALL INCLUDE THE CONTRACTOR'S JOB SUPERINTENDENT, SUBCONTRACTORS, AND CONSTRUCTION SURVEYOR.

MUSCATINE-6
04-16-13

MAINTAIN ACCESS NOTE

The Contractor shall be responsible to maintain access to individual properties during construction.

MUSCATINE-11
04-16-13

SMOOTHNESS NOTE

ARTICLE 2316, PAVEMENT SMOOTHNESS, SHALL APPLY TO THIS PROJECT. SMOOTHNESS PER SCHEDULE 'A' WITH INCENTIVE PAY.

MUSCATINE-8
04-16-13

HAUL ROADS NOTE

THE CONTRACTOR SHALL BE RESPONSIBLE FOR ALL THE DUST CONTROL ACCORDING TO SPECIFICATION 1107.07 AND SHALL BLADE ALL HAUL ROADS TO A SMOOTH CONDITION AT AN INTERVAL RATE OF ONE PASS PER EVERY 750 TONS OF CONTRACT MATERIAL DELIVERED OVER SAID ROADS.

MUSCATINE COUNTY WILL INCUR ALL COSTS OF DELIVERED MATERIAL TO MAINTAIN SAID HAUL ROADS IN GOOD REPAIR AS DETERMINED BY THE COUNTY ENGINEER.

ANY AND ALL NECESSARY BLADING AND DUST CONTROL SHALL BE INCIDENTAL TO THE CONTRACT. IF, AT ANY TIME, THE NECESSARY BLADING AND DUST CONTROL HAS NOT BEEN COMPLIED WITH, CONSTRUCTION WILL BE SUSPENDED AND WILL REMAIN SUSPENDED UNTIL SUCH DEFICIENCIES ARE CORRECTED. THIS SHALL APPLY TO ANY AND ALL HAUL ROADS USED BY MATERIAL SUPPLIERS.

105-4
10-18-11

STANDARD ROAD PLANS

The following Standard Road Plans apply to construction work on this project.

Number	Date	Title
PM-110	10-16-18	Line Types
PM-120	10-21-14	Stop Lines and Islands
PM-520	10-15-19	Two-Lane Roadway with no Turn Lanes (Two-Way Stop Condition)
PV-10	04-16-19	Rumble Strip Panel for Intersection Approach
PV-101	04-16-19	Joints
TC-202	04-21-15	Work Within 15 ft of Traveled Way
TC-212	10-15-19	Spot Location Lane Closure with Flaggers
TC-213	10-15-19	Lane Closure with Flaggers
TC-233	10-17-17	Pavement Marking Operations Two-Lane
TC-252	04-19-16	Routes Closed to Traffic

ESTIMATE REFERENCE INFORMATION

Item No.	Item Code	Description
1	2102-2713090	EXCAVATION, CLASS 13, WASTE
		SEE SHEETS B2, C3, AND C4 FOR DETAILS AND TABULATIONS. THIS MATERIAL SHALL BE WASTED OFF-SITE IN A SUITABLE LOCATION
		AGREEABLE TO THE ENGINEER.
-	-	-
2	2113-0001100	SUBGRADE STABILIZATION MATERIAL, POLYMER GRID
		SEE SHEETS B2 AND C3 FOR DETAILS AND TABULATION.
-	-	-
3	2115-0100000	MODIFIED SUBBASE
		SEE SHEETS B2, C3, AND C4 FOR DETAILS AND TABULATIONS. SUBGRADE SHALL BE CUT TO FINAL GRADE ELEVATION IN ACCORDANCE
		WITH ARTICLE 2109.03,A,10 OF SECTION 2109. PROFILE AND CROSS SECTION TOLERANCES FOR MODIFIED SUBBASE ARE +0 TO -0.05
		FOOT. NO HEAVY EQUIPMENT WILL BE ALLOWED ON THE FINISH SUBBASE, EXCEPT AT TIME OF PAVING OPERATION.
-	-	-
4	2121-7425020	GRANULAR SHOULDERS, TYPE B
		SEE SHEET B2 FOR DETAILS. BID ITEM QUANTITY BASED ON A UNIT WEIGHT OF 140LBS/CU.FT. THIS ITEM INCLUDES A 10.9%
		INCREASE IN OVERLAY AREAS FOR VARIATION IN PAVEMENT THICKNESS. THE CONTRACTOR WILL BE REQUIRED TO PLACE AND COMPACT
		THIS MATERIAL IN A MINIMUM OF 2 EQUAL LIFTS. THE CONTRACTOR MAY BE REQUIRED TO PRE-WET MATERIAL TO PROVIDE SUFFICIENT
		COMPACTION. PRE-WETTING OF MATERIAL SHALL BE INCLUDED IN THIS BID ITEM.
-	-	-
5	2213-7100400	RELOCATION OF MAIL BOXES
		THE CONTRACTOR SHALL BE REQUIRED, IF NECESSARY, TO REMOVE AND REPLACE MAILBOXES (INCLUDING 911 ADDRESS SIGNS AS
		NECESSARY) ALONG THE ROUTE TO ACCOMMODATE CONSTRUCTION EQUIPMENT OR INCREASE MAILBOX HEIGHT DUE TO NEW CONSTRUCTION.
		THE CONTRACTOR SHALL BE REQUIRED TO FURNISH NEW 4"x4" TREATED WOOD POSTS IF EXISTING POSTS ARE DAMAGED DURING
		RELOCATION. METHOD OF MEASUREMENT SHALL BE FOR REMOVAL AND REPLACEMENT OF EACH MAILBOX. BASIS OF PAYMENT FOR
		REMOVAL AND REPLACEMENT OF EACH MAILBOX SHALL BE FULL COMPENSATION FOR FURNISHING ALL MATERIALS, EQUIPMENT, AND LABOR,
		AND FOR PERFORMANCE OF ALL WORK NECESSARY. THIS BID ITEM SHALL INCLUDE THE 911 ADDRESS SIGNS WITH NO ADDITIONAL
		MEASUREMENT OR PAYMENT. THIS BID ITEM SHALL ALSO INCLUDE ALL TEMPORARY MAILBOXES AS NECESSARY WITH NO ADDITIONAL
		MEASUREMENT OR PAYMENT. THIS BID ITEM SHALL ALSO INCLUDE THE REMOVAL AND DISPOSAL OF ANY CONCRETE MAILBOX FOOTINGS
		DISCOVERED WITHIN THE PROJECT LIMITS WITH NO ADDITIONAL MEASUREMENT OR PAYMENT.
-	-	-
6	2301-1033090	STANDARD OR SLIP FORM PORTLAND CEMENT CONCRETE PAVEMENT, CLA SS C, CLASS 3 DURABILITY, 9 IN.
		P.C. CONCRETE SHALL BE A "C" MIX WITH COARSE AGGREGATE OF CLASS 3 DURABILITY. NO CLASS "F" FLY ASH WILL BE ALLOWED.
		LONGITUDINAL GROOVING WILL BE REQUIRED IN ACCORDANCE WITH ARTICLE 2301.03,H,3,c,3. ALL PAVEMENT TRANSVERSE
		CONTRACTION JOINTS SHALL BE "CD" PLACED ON 15' SPACING, UNLESS OTHERWISE NOTED. ALL PAVEMENT LONGITUDINAL
		CONTRACTION JOINTS SHALL BE "L-2" AS DETAILED ON SRP PV-101. SECTION 2521 CERTIFIED PLANT INSPECTION SHALL APPLY TO
		THIS ITEM. SECTION 2316 PAVEMENT SMOOTHNESS SHALL APPLY TO THIS ITEM. THE MATURITY METHOD AS DESCRIBED IN MATERIALS
		I.M. 383 SHALL BE USED TO DETERMINE TIME OF OPENING. SEE ALL SHEETS FOR PLACEMENT DETAILS AND TABULATIONS.
-	-	-
7	2301-9091000	RUMBLE STRIP PANEL (PCC SURFACE)
		SEE SHEET C3 FOR TABULATION.
-	-	-
8	2310-5151040	PORTLAND CEMENT CONCRETE OVERLAY, FURNISH ONLY
		P.C. CONCRETE SHALL BE A "C" MIX WITH COARSE AGGREGATE OF CLASS 3 DURABILITY. NO CLASS "F" FLY ASH WILL BE ALLOWED.
		SECTION 2521 CERTIFIED PLANT INSPECTION SHALL APPLY TO THIS ITEM. QUANTITY BASED ON CROSS SECTION MEASUREMENTS,
		APPROXIMATELY 10.9% OVERRUN ON NOMINAL 8 INCHES.
-	-	-
9	2310-5151551	PORTLAND CEMENT CONCRETE OVERLAY, PLACEMENT ONLY (WHITE TOPP ING)
		P.C. CONCRETE SHALL BE A "C" MIX WITH COARSE AGGREGATE OF CLASS 3 DURABILITY. NO CLASS "F" FLY ASH WILL BE ALLOWED.
		LONGITUDINAL GROOVING WILL BE REQUIRED IN ACCORDANCE WITH ARTICLE 2301.03,H,3,c,3. ALL PAVEMENT TRANSVERSE
		CONTRACTION JOINTS SHALL BE SKEWED "C" JOINTS PLACED ON 12' SPACING, UNLESS OTHERWISE NOTED. ALL PAVEMENT
		LONGITUDINAL CONTRACTION JOINTS SHALL BE "L-2" AS DETAILED ON SRP PV-101. SECTION 2521 CERTIFIED PLANT INSPECTION
		SHALL APPLY TO THIS ITEM. SECTION 2316 PAVEMENT SMOOTHNESS SHALL APPLY TO THIS ITEM. THE MATURITY METHOD AS DESCRIBED
		IN MATERIALS I.M. 383 SHALL BE USED TO DETERMINE TIME OF OPENING. SEE ALL SHEETS FOR PLACEMENT DETAILS.
-	-	-
10	2310-8300550	PAVEMENT INTERLAYER GEOTEXTILE
		IOWA DOT DEVELOPMENTAL SPECIFICATION DS-15052 SHALL APPLY TO THIS ITEM. INTERLAYER GEOTEXTILE SHALL BE PLACED OVER
		EXISTING PCC PAVEMENT FROM STATION 263+17 TO STATION 265+98.
-	-	-
11	2312-8260051	GRANULAR SURFACING ON ROAD, CLASS A CRUSHED STONE
		QUANTITY BASED ON 2 INTERSECTIONS AT 30 TONS/INTERSECTION.
-	-	-
12	2315-8275025	SURFACING, DRIVEWAY, CLASS A CRUSHED STONE
		QUANTITY BASED ON 20 DRIVEWAYS AND FIELD ENTRANCES AT 15 TONS/ENTRANCE.
-	-	-
14	2510-6745850	REMOVAL OF PAVEMENT
		SEE SHEETS B1 AND C3 FOR DETAILS AND TABULATION. THIS BID ITEM SHALL INCLUDE ALL SAW CUTS NECESSARY FOR THE REMOVAL
		OF THIS PAVEMENT. THIS BID ITEM SHALL INCLUDE THE ENTIRE PAVEMENT STRUCTURE, REGARDLESS OF THICKNESS ENCOUNTERED. NO
		PAYMENT FOR ADDITIONAL THICKNESS, IF ENCOUNTERED, WILL BE MADE. ALL MATERIAL SHALL BE WASTED OFF-SITE IN AN APPROVED
		LOCATION THAT IS AGREEABLE TO THE ENGINEER. THIS ITEM SHALL BE COMPLETED IN EACH STAGE PRIOR TO PAVING.
-	-	-
15	2518-6910000	SAFETY CLOSURE
		SEE SHEET C3 FOR TABULATION.
-	-	-
16	2526-8285000	CONSTRUCTION SURVEY
		THE CONTRACTING AUTHORITY WILL BE RESPONSIBLE FOR MONUMENT PRESERVATION ON THIS PROJECT. THE CONTRACTOR WILL BE
		RESPONSIBLE FOR ALL OTHER ITEMS UNDER THIS SECTION. SEE ALL SHEETS FOR DETAILS.
-	-	-
17	2527-9263117	PAINTED PAVEMENT MARKINGS, DURABLE
		SEE SHEET C4 FOR TABULATION. WHITE EDGE LINES SHALL BE PAINTED 6 INCHES WIDE. THIS BID ITEM INCLUDES A 50% INCREASE
		FOR 6 INCH WIDE EDGE LINES.
-	-	-
18	2528-8445110	TRAFFIC CONTROL
		FOR ROAD CLOSURES REFER TO SRP TC-252 AND THE TRAFFIC CONTROL NOTES ON SHEET J1. SEE SHEETS J2-J5 FOR DETOUR SIGNING
		LOCATIONS. ALL SIGNS SHALL BE IN PLACE PRIOR TO CLOSING ROADWAY SECTIONS. THE CONTRACTOR SHALL FURNISH ALL DETOUR
		SIGNING AS DESIGNATED ON THESE SHEETS INCLUDING ALL HARDWARE AND POSTS NECESSARY FOR ERECTING AND MAINTAINING FOR THE

100-4A
10-29-02

ESTIMATE REFERENCE INFORMATION

Item No.	Item Code	Description
		DURATION OF THE DETOUR. THIS BID ITEM SHALL INCLUDE THE COST OF ALL DETOUR SIGNING AND MAINTENANCE. THIS BID ITEM
		SHALL ALSO INCLUDE THE REMOVAL AND STOCKPILING OF EXISTING SIGNS AND SUPPORT POSTS WITHIN THE CONSTRUCTION LIMITS.
-	-	-
19	2528-8445113	FLAGGERS
		FLAGGERS MAY BE REQUIRED AT TIMES DURING CONSTRUCTION FOR SAFETY. FLAGGERS SHALL BE REQUIRED AT THE BEGINNING AND
		ENDING OF EACH DAY'S RUN AND AT ALL SIDE ROAD INTERSECTIONS DURING PLACEMENT OF MAINLINE PAVING.
-	-	-

111-25
10-18-11

INDEX OF TABULATIONS

Tabulation	Tabulation Title	Sheet No.
100-0A	ESTIMATED ROADWAY QUANTITIES	C1
100-1D	PROJECT DESCRIPTION	C1
100-27	PROPOSED POSTED SPEED LIMIT	C1
105-4	STANDARD ROAD PLANS	C1
MUSC-2	TABULATION OF UTILITIES	C1
MUSC-3	CERTIFIED PLANT INSPECTION NOTE	C1
MUSC-4	PRECONSTRUCTION MEETING NOTE	C1
MUSC-6	MAINTAIN ACCESS NOTE	C1
MUSC-8	HAUL ROADS NOTE	C1
MUSC-10	GENERAL NOTES	C1
MUSC-11	SMOOTHNESS NOTE	C1
100-4A	ESTIMATE REFERENCE INFORMATION	C2
108-13A	SAFETY CLOSURES	C3
110-1	REMOVAL OF PAVEMENT	C3
111-25	INDEX OF TABULATIONS	C3
112-7	RUMBLE STRIP PANELS	C3
MUSC-14	POLYMER GRID & MODIFIED SUBBASE FOR MAINLINE PAVING	C3
108-22	PAVEMENT MARKING LINE TYPES	C4
MUSC-18	TABULATION OF PAVED INTERSECTIONS	C4
108-23A	TRAFFIC CONTROL PLAN	J1
108-26A	STAGING NOTES	J1
MUSC-50	TRAFFIC CONTROL NOTE	J1
MUSC-51	TYPE 3 BARRICADES NOTE	J1
MUSC-52	SIGN LOCATION NOTE	J1

110-1
04-16-13

REMOVAL OF PAVEMENT

Refer to Tabulation 102-5

* Not a Bid Item

Begin Station	End Station	Side	Pavement Type	Area SY	Saw Cut* LF	Remarks
211+93.77	211+99.00	BOTH	PCC/HMA	15.1	26.0	20" ± COMPOSITE SECTION PCC OVER HMA
211+99.00	212+07.71	BOTH	PCC/HMA	21.3		20" ± COMPOSITE SECTION PCC OVER HMA
212+07.71	213+07.32	BOTH	PCC	243.5		8" ± PCC
213+07.32	216+50.00	BOTH	HMA	837.7	22.0	8" ± HMA
340+91.00		LT	HMA	19.6	48.0	8" ± HMA DRIVEWAY FILLET
				1137.1	96.0	TOTALS

MUSCATINE-14
04-16-13

POLYMER GRID & MODIFIED SUBBASE FOR MAINLINE PAVING

Station to Station		Width	Polymer Grid SQ. YDS.	Modified Subbase CU. YDS.	Cl 13 Exc CU. YDS.	Remarks
211+93.77	216+50.00	28	1419.4	393.0	396.0	

108-13A
08-01-08

SAFETY CLOSURES

Refer to Section 2518 of the Standard Specifications

Station	Closure Type Road Qty.	Closure Type Hazard Qty.	Remarks
211+75.00	1		STAGE 1, BOP
264+28.00	1		STAGE 1, W 1/2 JASPER AVE
264+28.00	1		STAGE 1, W 1/2 JASPER (N)
264+28.00	1		STAGE 1, W 1/2 JASPER (S)
264+28.00	1		STAGE 2, E 1/2 JASPER AVE
264+28.00	1		STAGE 2, E 1/2 JASPER (N)
264+28.00	1		STAGE 2, E 1/2 JASPER (S)
342+50.00	1		STAGE 2, EOP
	8		TOTAL

112-7
10-19-10

RUMBLE STRIP PANELS

Refer to Standard Road Plan PV-10.

Location Road Ident.	Location Station	Location Side	Pavement New	Pavement Existing	Remarks
231ST STREET	216+00.00	LT	X		
231ST STREET	219+30.00	LT	X		

PAVEMENT MARKING LINE TYPES

See PM-110

*BCY4 - Place on the same side of the roadway to match existing markings near the project.
**NPY4 - For estimating purposes only. No Passing Zone Lines will be located in the field.
***MNY4 - Factor of 1.00 as value includes number of 4-inch passes to cover median nose area.

BCY4: Broken Centerline (Yellow) @ 0.25
DCY4: Double Centerline (Yellow) @ 2.00
NPY4: No Passing Zone Line (Yellow) @ 1.25
BLW4: Broken Lane Line (White) @ 0.25
ELW4: Edge Line Right (White) @ 1.00
ELY4: Edge Line Left (Yellow) @ 1.00
SLW2: Stop Line (White) @ 6.00

Location								Length by Line Type (Unfactored)															Remarks
Road ID	Station to Station		Dir. of Travel	Marking Type	Side			BCY4*	DCY4	NPY4**	BLW4	ELW4	ELY4	SLW2									
					L	C	R	STA	STA	STA	STA	STA	STA	STA	STA	STA	STA	STA	STA	STA	STA	STA	
231ST STREET	211+64.00	218+50.00	EB	Durable Paint	X					6.86													
231ST STREET	218+50.00	244+92.00	EB	Durable Paint				26.42															
231ST STREET	244+92.00	253+02.00	EB	Durable Paint			X			8.10													
231ST STREET	253+02.00	255+29.00	EB	Durable Paint				2.27															
231ST STREET	255+29.00	263+55.00	EB	Durable Paint	X					8.26													
231ST STREET	263+55.00	272+87.00	EB	Durable Paint				9.32															
231ST STREET	272+87.00	281+20.00	EB	Durable Paint			X			8.33													
231ST STREET	281+20.00	283+56.00	EB	Durable Paint				2.36															
231ST STREET	283+56.00	289+66.00	EB	Durable Paint	X					6.10													
231ST STREET	289+66.00	300+51.00	EB	Durable Paint				10.85															
231ST STREET	300+51.00	309+90.00	EB	Durable Paint			X			9.39													
231ST STREET	309+90.00	320+66.00	EB	Durable Paint	X					10.76													
231ST STREET	320+66.00	342+00.00	EB	Durable Paint				21.34															
231ST STREET	211+64.00	263+68.00	EB	Durable Paint								52.04											
231ST STREET	211+64.00	263+68.00	WB	Durable Paint								52.04											
231ST STREET	264+70.00	342+00.00	EB	Durable Paint								77.30											
231ST STREET	264+70.00	342+00.00	WB	Durable Paint								77.30											
231ST STREET	211+64.00		WB	Durable Paint										0.17									
				Factored Total: Durable Paint				18.14	-	72.25	-	258.68	-	1.02	-	-	-	-	-	-	-	-	
												388.02	50% Inc.										
				Bid Quantity: Painted Pavement Markings, Durable							479.43												

TABULATION OF PAVED INTERSECTIONS

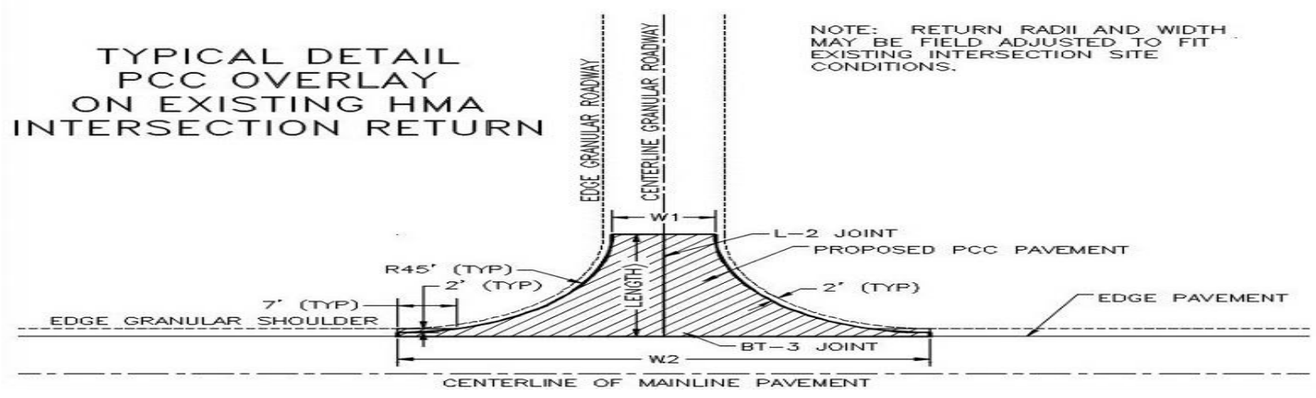

① BID ITEMS ② BASED ON AVERAGE DEPTH OF 9 INCHES ③ BASED ON AVERAGE DEPTH OF 10 INCHES ④ BID ITEM INCLUDES SAW CUTS

LOCATION (EXISTING PAV'T TYPE)		WIDTH		LENGTH	PCC INTER. ①	MOD. SUBBASE ①	CL. 13 EXCAV. ①	PAV'T REMOVAL ①	Remarks
STATION	SIDE	W1	W2	FT.	SQ. YDS. ②	CU. YDS. ③	CU. YDS. ③	SQ. YDS. ④	
264+28.00	LT	24.0	113.6	50.0	234.4	65.0	72.0	0.0	JASPER AVENUE RETURN (NORTH)
264+28.00	RT	24.0	113.6	50.0	234.4	65.0	65.0	0.0	JASPER AVENUE RETURN (SOUTH)
					468.8	130.0	137.0		TOTALS

MUSCATINE COUNTY GPS MONUMENTS FOR PROJECT CONTROL
PROJECT: FM-C070(67)--55-70
Coordinate System: Iowa Regional Coordinate System
Datum: NAD 83(NA2011)
Zone: IaRCS Zone 14 Burlington TM
Geoid: GEOID12A (Conus)
Vertical Datum: NAVD88

Point ID	Northing sft	Easting sft	Elevation sft	Latitude (Global)	Longitude (Global)	Height (Global)	Projection Scale Factor	Height Scale Factor	Combined Scale Factor	Meridian Convergence Angle
134	6618919.783	24541583.661	543.060	N41°23'58.88197"	W91°05'54.37075"	435.023	1.00001998	0.9999792418	0.9999992176	0°06'01"
137	6611056.956	24525267.381	535.190	N41°22'41.42575"	W91°09'28.56984"	427.125	1.00001873	0.9999796187	0.9999983479	0°03'39"
313	6627365.097	24544402.105	683.520	N41°25'22.26879"	W91°05'17.18228"	575.567	1.00002025	0.9999725357	0.9999927882	0°06'26"
506	6634925.445	24520862.949	741.890	N41°26'37.28223"	W91°10'26.06733"	634.055	1.00001850	0.9999697449	0.9999882418	0°03'01"
807	6624685.467	24530086.134	738.314	N41°24'56.01661"	W91°08'25.13647"	630.363	1.00001903	0.9999699210	0.9999889549	0°04'21"
						Average Combined Scale Factor			**0.9999935101**	

Tie sheets for GPS Monuments can be downloaded at:
https://magic-gis.com/SurveyControl_ver2.2/index.html

GENERAL NOTES:
COORDINATE VALUES LISTED ON THESE SHEETS ARE IOWA REGIONAL COORDINATE SYSTEM GRID COORDINATES. THIS IS A LOW DISTORTION PROJECTION, SO GRID/GROUND DISTANCE DIFFERENCES SHOULD BE NEGLIGABLE. THE AVERAGE COMBINED SCALE FACTOR HAS BEEN PROVIDED IN THE TABLE ABOVE, IF NEEDED. SECTION CORNER TIE SHEETS ARE AVAILABLE UPON REQUEST FROM THE ENGINEER'S OFFICE. THE PLAN AND PROFILE INFORMATION HAS BEEN PROVIDED FOR MAINLINE 231ST STREET G28. PLAN AND PROFILE DATA IS ALSO AVAILABLE FOR HIGH PRAIRIE ROAD, FUNKS HILL ROAD, AND BURLINGTON ROAD UPON REQUEST. THE POINT, ALIGNMENT, AND PROFILE DATA CAN ALSO BE PROVIDED IN DIGITAL FORMAT UPON REQUEST (CIVIL 3D OR XML). PROJECT CONTROL POINTS ARE A SET 5/8"Øx30" REBAR WITH PINK CAP STAMPED "MUSCATINE CO CONTROL POINT". THEY WERE SET ALONG THE PROJECT ROUTE, ALTERNATING SIDES, APPROXIMATELY EVERY 400 FEET.

PROJECT CONTROL POINTS
PROJECT: FM-C070(67)--55-70

Point Name	Northing (ft)	Easting (ft)	Elevation (ft)	Description
1	6624378.72	24521563.62	742.29	RN=REBAR-W/CAP
2	6624258.68	24521981.97	742.20	RN=REBAR-W/CAP
3	6624367.46	24522384.97	747.44	RN=REBAR-W/CAP
4	6624245.73	24522783.33	749.13	RN=REBAR-W/CAP
5	6624367.93	24523183.84	751.92	RN=REBAR-W/CAP
62	6624465.68	24509808.28	682.51	RN=REBAR-W/CAP
63	6624336.85	24510033.54	689.65	RN=REBAR-W/CAP
64	6624480.50	24510371.60	687.37	RN=REBAR-W/CAP
65	6624368.61	24510762.62	687.47	RN=REBAR-W/CAP
66	6624413.55	24511163.30	687.87	RN=REBAR-W/CAP
67	6624352.89	24511641.29	688.99	RN=REBAR-W/CAP
68	6624411.91	24511983.07	691.80	RN=REBAR-W/CAP
69	6624339.57	24512369.51	691.13	RN=REBAR-W/CAP
70	6624384.57	24512769.13	693.27	RN=REBAR-W/CAP
71	6624322.29	24513165.26	698.11	RN=REBAR-W/CAP
72	6624372.72	24513578.87	709.08	RN=REBAR-W/CAP
73	6624282.36	24513972.99	714.15	RN=REBAR-W/CAP
74	6624359.09	24514369.77	712.53	RN=REBAR-W/CAP
75	6624302.27	24514764.24	707.73	RN=REBAR-W/CAP
76	6624351.27	24515163.46	706.25	RN=REBAR-W/CAP
77	6624299.50	24515563.32	707.63	RN=REBAR-W/CAP
78	6624375.96	24515959.46	710.75	RN=REBAR-W/CAP
79	6624298.15	24516361.63	718.04	RN=REBAR-W/CAP
80	6624373.22	24516757.67	730.58	RN=REBAR-W/CAP
81	6624296.29	24517164.82	729.11	RN=REBAR-W/CAP
82	6624375.07	24517572.29	730.24	RN=REBAR-W/CAP
83	6624273.54	24517964.25	732.64	RN=REBAR-W/CAP
84	6624355.47	24518368.43	734.29	RN=REBAR-W/CAP
85	6624279.15	24518762.07	739.63	RN=REBAR-W/CAP
86	6624359.55	24519165.20	747.97	RN=REBAR-W/CAP
87	6624284.23	24519563.36	761.15	RN=REBAR-W/CAP
88	6624364.23	24519967.22	756.62	RN=REBAR-W/CAP
89	6624310.54	24520367.20	750.86	RN=REBAR-W/CAP
90	6624384.75	24520762.86	745.75	RN=REBAR-W/CAP
91	6624273.69	24521160.13	742.57	RN=REBAR-W/CAP

PROJECT SURVEY POINTS
PROJECT: FM-C070(67)--55-70

Number	Northing (ft)	Easting (ft)	Elevation (ft)	Description
92	6634925.48	24520863.05	741.81	GPSMON=506
93	6603265.83	24502965.43	720.93	GPSMON=505
94	6627206.97	24497279.77	597.49	GPSMON=130
100	6624685.45	24530086.17	738.19	GPSMON=807
101	6624367.00	24512350.55	694.18	SC=NAIL/SPIKE=3/8"=0.2===FND BOAT SPIKE GOOD COND C4763W
102	6624366.94	24512350.55	693.84	SC=PIPE=3/4"=0.5===FND GOOD COND C4763W
103	6624367.00	24512350.58	692.61	SC=PIPE=3/4"=1.7===FND GOOD COND C4763W
104	6624367.01	24512350.63	691.30	SC=REBAR=1/2"=3.0===FND SMOOTH BAR C4763W
105	6624340.71	24513686.44	712.03	SC=PIPE=3/4"=0.2===FND BOAT SPIKE INSIDE PIPE BOTH COND GOOD NE NW-SE4763W
106	6624340.66	24513686.40	711.36	SC=NAIL/SPIKE=3/8"=0.9===FND BOAT SPIKE COND GOOD NE NW-SE4763W
107	6624325.30	24515010.13	709.54	SC=SAW X=4"x4"=0===COND GOOD E4763W
108	6624233.96	24514920.02	707.39	SC=REBAR=5/8"=0=LT BLUE=23526=NEW SC TIE
109	6624257.69	24515091.82	705.65	SC=REBAR=5/8"=0=LT BLUE=23526=NEW SC TIE
110	6624323.12	24517612.58	734.00	SC=PIPE=3/4"=0.2===FND BOAT SPIKE INSIDE PIPE OVER ANOTHER BOAT SPIKE C3763W
111	6624271.49	24517552.61	730.45	SC=REBAR=5/8"=0=LT BLUE=23526=NEW SC TIE
112	6624339.21	24520209.10	755.42	SC=NAIL/SPIKE=MAG NAIL=0.1===FND PK W/WASHER COND GOOD E3763W
113	6624339.30	24520208.70	754.93	SC=NAIL/SPIKE=3/8"=0.5===FND BOAT SPIKE COND GOOD E3763W
114	6624339.70	24520208.91	753.89	SC=REBAR=1/2"=1.8===COND GOOD E3763W
115	6624304.52	24522878.00	752.48	SC=NAIL/SPIKE=3/8"=0.1===HEAD BROKE OFF C2763W
116	6624304.41	24522878.05	752.14	SC=NAIL/SPIKE=3/8"=0.5===BOAT SPIKE C2763W
117	6624379.54	24511624.99	692.08	PROPCOR=REBAR=1/2"=0===COND GOOD
118	6624382.17	24511472.76	691.82	PROPCOR=PK/NAIL=PK=0===COND GOOD
119	6624412.88	24509705.55	687.72	SC=COPPER DISK=1"=0.1===GOOD COND E5763W
122	6624383.30	24517665.23	731.04	SC=REBAR=1/2"=0.6 ABOVE===SC TIE C3763W
123	6624340.37	24513685.94	710.46	SC=REBAR=3/4"=1.7===COND GOOD NE NW-SE4763W

Alignment: 2018_Design_Centerline_G28_No2
Description: FM(67) Design Centerline

Tangent Data

Description	PT Station	Northing	Easting
Start:	211+22.190	6624412.882	24509705.55
End:	212+92.266	6624410.121	24509875.6

Tangent Data

Parameter	Value	Parameter	Value
Length:	170.076	Course:	S 89° 04' 11.3749" E

Tangent Data

Description	PT Station	Northing	Easting
Start:	212+92.266	6624410.121	24509875.6
End:	219+00.020	6624399.402	24510483.26

Tangent Data

Parameter	Value	Parameter	Value
Length:	607.754	Course:	S 88° 59' 21.9776" E

Tangent Data

Description	PT Station	Northing	Easting
Start:	219+00.020	6624399.402	24510483.26
End:	225+50.020	6624388.642	24511133.17

Tangent Data

Parameter	Value	Parameter	Value
Length:	650	Course:	S 89° 03' 05.2621" E

Tangent Data

Description	PT Station	Northing	Easting
Start:	225+50.020	6624388.642	24511133.17
End:	237+67.622	6624367.455	24512350.59

Tangent Data

Parameter	Value	Parameter	Value
Length:	1217.601	Course:	S 89° 00' 10.6904" E

Tangent Data

Description	PT Station	Northing	Easting
Start:	237+67.622	6624367.455	24512350.59
End:	251+03.249	6624340.951	24513685.95

Tangent Data

Parameter	Value	Parameter	Value

Alignment: 2018_Design_Centerline_G28_No2
Description: FM(67) Design Centerline

Parameter	Value	Parameter	Value
Length:	1335.628	Course:	S 88° 51' 46.6474" E

Tangent Data

Description	PT Station	Northing	Easting
Start:	251+03.249	6624340.951	24513685.95
End:	257+00.020	6624334.097	24514282.68

Tangent Data

Parameter	Value	Parameter	Value
Length:	596.771	Course:	S 89° 20' 31.1331" E

Tangent Data

Description	PT Station	Northing	Easting
Start:	257+00.020	6624334.097	24514282.68
End:	260+50.020	6624330.164	24514632.66

Tangent Data

Parameter	Value	Parameter	Value
Length:	350	Course:	S 89° 21' 21.8422" E

Tangent Data

Description	PT Station	Northing	Easting
Start:	260+50.020	6624330.164	24514632.66
End:	263+17.313	6624327.619	24514899.94

Tangent Data

Parameter	Value	Parameter	Value
Length:	267.293	Course:	S 89° 27' 15.7033" E

Tangent Data

Description	PT Station	Northing	Easting
Start:	263+17.313	6624327.619	24514899.94
End:	264+27.515	6624326.059	24515010.13

Tangent Data

Parameter	Value	Parameter	Value
Length:	110.202	Course:	S 89° 11' 20.9750" E

Tangent Data

Description	PT Station	Northing	Easting
Start:	264+27.515	6624326.059	24515010.13
End:	265+97.693	6624325.048	24515180.31

Tangent Data

Alignment: 2018_Design_Centerline_G28_No2
Description: FM(67) Design Centerline

Parameter	Value	Parameter	Value
Length:	170.178	Course:	S 89° 39' 34.6139" E

Tangent Data

Description	PT Station	Northing	Easting
Start:	265+97.693	6624325.048	24515180.31
End:	267+50.023	6624325.217	24515332.64

Tangent Data

Parameter	Value	Parameter	Value
Length:	152.33	Course:	N 89° 56' 11.1998" E

Tangent Data

Description	PT Station	Northing	Easting
Start:	267+50.023	6624325.217	24515332.64
End:	277+00.024	6624324.476	24516282.64

Tangent Data

Parameter	Value	Parameter	Value
Length:	950	Course:	S 89° 57' 19.0175" E

Tangent Data

Description	PT Station	Northing	Easting
Start:	277+00.024	6624324.476	24516282.64
End:	290+29.967	6624323.7	24517612.58

Tangent Data

Parameter	Value	Parameter	Value
Length:	1329.943	Course:	S 89° 57' 59.7209" E

Tangent Data

Description	PT Station	Northing	Easting
Start:	290+29.967	6624323.7	24517612.58
End:	303+00.020	6624331.643	24518882.61

Tangent Data

Parameter	Value	Parameter	Value
Length:	1270.053	Course:	N 89° 38' 29.9837" E

Tangent Data

Description	PT Station	Northing	Easting
Start:	303+00.020	6624331.643	24518882.61
End:	309+50.021	6624336.218	24519532.59

Alignment: 2018_Design_Centerline_G28_No2
Description: FM(67) Design Centerline

Tangent Data

Parameter	Value	Parameter	Value
Length:	650	Course:	N 89° 35' 48.2254" E

Tangent Data

Description	PT Station	Northing	Easting
Start:	309+50.021	6624336.218	24519532.59
End:	316+26.506	6624339.653	24520209.07

Tangent Data

Parameter	Value	Parameter	Value
Length:	676.486	Course:	N 89° 42' 32.6793" E

Tangent Data

Description	PT Station	Northing	Easting
Start:	316+26.506	6624339.653	24520209.07
End:	326+00.021	6624327.424	24521182.51

Tangent Data

Parameter	Value	Parameter	Value
Length:	973.514	Course:	S 89° 16' 48.9070" E

Tangent Data

Description	PT Station	Northing	Easting
Start:	326+00.021	6624327.424	24521182.51
End:	337+78.982	6624312.194	24522361.37

Tangent Data

Parameter	Value	Parameter	Value
Length:	1178.961	Course:	S 89° 15' 35.4090" E

Tangent Data

Description	PT Station	Northing	Easting
Start:	337+78.982	6624312.194	24522361.37
End:	351+09.327	6624293.584	24523691.59

Tangent Data

Parameter	Value	Parameter	Value
Length:	1330.345	Course:	S 89° 11' 54.4320" E

Vertical Alignment: Design Profile G28 No 2
Station Range: Start: 211+22.81, End: 348+40.00

PVI	Station	Grade Out (%)	Curve Length	
0	212+05.00	0.51%	158.00'	
	Vertical Curve Information:(crest curve)			
	PVC Station:	211+26.00	Elevation:	687.80'
	PVI Station:	212+05.00	Elevation:	688.88'
	PVT Station:	212+84.00	Elevation:	689.29'
	High Point:	212+84.00	Elevation:	689.29'
	Grade in(%):	1.37%	Grade out(%):	0.51%
	Change(%):	0.86%	K:	184.4763156
	Curve Length:	158.00'		
	Passing Distance:	1,884.49'	Stopping Distance:	854.94'
1	216+24.00	0.00%	200.00'	
	Vertical Curve Information:(crest curve)			
	PVC Station:	215+24.00	Elevation:	690.52'
	PVI Station:	216+24.00	Elevation:	691.03'
	PVT Station:	217+24.00	Elevation:	691.03'
	High Point:	217+24.00	Elevation:	691.03'
	Grade in(%):	0.51%	Grade out(%):	0.00%
	Change(%):	0.51%	K:	391.2032071
	Curve Length:	200.00'		
	Passing Distance:	3,124.71'	Stopping Distance:	1,399.92'
2	221+55.00	0.14%	200.00'	
	Vertical Curve Information:(sag curve)			
	PVC Station:	220+55.00	Elevation:	691.04'
	PVI Station:	221+55.00	Elevation:	691.04'
	PVT Station:	222+55.00	Elevation:	691.18'
	Low Point:	220+55.00	Elevation:	691.04'
	Grade in(%):	0.00%	Grade out(%):	0.14%
	Change(%):	0.13%	K:	1488.877503
	Curve Length:	200.00'		
	Headlight Distance:			
3	224+56.00	0.32%	200.00'	
	Vertical Curve Information:(sag curve)			
	PVC Station:	223+56.00	Elevation:	691.31'
	PVI Station:	224+56.00	Elevation:	691.45'
	PVT Station:	225+56.00	Elevation:	691.77'
	Low Point:	223+56.00	Elevation:	691.31'
	Grade in(%):	0.14%	Grade out(%):	0.32%
	Change(%):	0.18%	K:	1095.815505
	Curve Length:	200.00'		
	Headlight Distance:			
4	227+07.00	0.21%	200.00'	
	Vertical Curve Information:(crest curve)			

Vertical Alignment: Design Profile G28 No 2
Station Range: Start: 211+22.81, End: 348+40.00

	PVC Station:	226+07.00	Elevation:	691.93'
	PVI Station:	227+07.00	Elevation:	692.25'
	PVT Station:	228+07.00	Elevation:	692.46'
	High Point:	228+07.00	Elevation:	692.46'
	Grade in(%):	0.32%	Grade out(%):	0.21%
	Change(%):	0.11%	K:	1834.484731
	Curve Length:	200.00'		
	Passing Distance:	14,283.89'	Stopping Distance:	6,195.76'
5	233+46.00	0.35%	400.00'	
	Vertical Curve Information:(sag curve)			
	PVC Station:	231+46.00	Elevation:	693.17'
	PVI Station:	233+46.00	Elevation:	693.59'
	PVT Station:	235+46.00	Elevation:	694.28'
	Low Point:	231+46.00	Elevation:	693.17'
	Grade in(%):	0.21%	Grade out(%):	0.35%
	Change(%):	0.14%	K:	2933.704457
	Curve Length:	400.00'		
	Headlight Distance:			
6	240+80.00	0.88%	250.00'	
	Vertical Curve Information:(sag curve)			
	PVC Station:	239+55.00	Elevation:	695.70'
	PVI Station:	240+80.00	Elevation:	696.13'
	PVT Station:	242+05.00	Elevation:	697.22'
	Low Point:	239+55.00	Elevation:	695.70'
	Grade in(%):	0.35%	Grade out(%):	0.88%
	Change(%):	0.53%	K:	472.6336124
	Curve Length:	250.00'		
	Headlight Distance:			
7	244+16.00	2.06%	250.00'	
	Vertical Curve Information:(sag curve)			
	PVC Station:	242+91.00	Elevation:	697.98'
	PVI Station:	244+16.00	Elevation:	699.07'
	PVT Station:	245+41.00	Elevation:	701.64'
	Low Point:	242+91.00	Elevation:	697.98'
	Grade in(%):	0.88%	Grade out(%):	2.06%
	Change(%):	1.18%	K:	210.984456
	Curve Length:	250.00'		
	Headlight Distance:			
8	254+34.00	-1.15%	800.00'	
	Vertical Curve Information:(crest curve)			
	PVC Station:	250+34.00	Elevation:	711.80'
	PVI Station:	254+34.00	Elevation:	720.04'
	PVT Station:	258+34.00	Elevation:	715.44'

Vertical Alignment: Design Profile G28 No 2
Station Range: Start: 211+22.81, End: 348+40.00

	High Point:	255+47.33	Elevation:	717.09'
	Grade in(%):	2.06%	Grade out(%):	-1.15%
	Change(%):	3.21%	K:	249.1973495
	Curve Length:	800.00'		
	Passing Distance:	881.69'	Stopping Distance:	575.52'
9	262+12.00	-0.36%	200.00'	
	Vertical Curve Information:(sag curve)			
	PVC Station:	261+12.00	Elevation:	712.24'
	PVI Station:	262+12.00	Elevation:	711.09'
	PVT Station:	263+12.00	Elevation:	710.73'
	Low Point:	263+12.00	Elevation:	710.73'
	Grade in(%):	-1.15%	Grade out(%):	-0.36%
	Change(%):	0.79%	K:	251.8969897
	Curve Length:	200.00'		
	Headlight Distance:			
10	266+02.00	0.50%	350.00'	
	Vertical Curve Information:(sag curve)			
	PVC Station:	264+27.00	Elevation:	710.32'
	PVI Station:	266+02.00	Elevation:	709.70'
	PVT Station:	267+77.00	Elevation:	710.58'
	Low Point:	265+71.90	Elevation:	710.07'
	Grade in(%):	-0.36%	Grade out(%):	0.50%
	Change(%):	0.86%	K:	406.5644874
	Curve Length:	350.00'		
	Headlight Distance:			
11	270+50.00	0.61%	350.00'	
	Vertical Curve Information:(sag curve)			
	PVC Station:	268+75.00	Elevation:	711.08'
	PVI Station:	270+50.00	Elevation:	711.96'
	PVT Station:	272+25.00	Elevation:	713.02'
	Low Point:	268+75.00	Elevation:	711.08'
	Grade in(%):	0.50%	Grade out(%):	0.61%
	Change(%):	0.10%	K:	3403.729072
	Curve Length:	350.00'		
	Headlight Distance:			
12	275+44.00	3.06%	350.00'	
	Vertical Curve Information:(sag curve)			
	PVC Station:	273+69.00	Elevation:	713.90'
	PVI Station:	275+44.00	Elevation:	714.96'
	PVT Station:	277+19.00	Elevation:	720.32'
	Low Point:	273+69.00	Elevation:	713.90'
	Grade in(%):	0.61%	Grade out(%):	3.06%
	Change(%):	2.46%	K:	142.501435

Vertical Alignment: Design Profile G28 No 2
Station Range: Start: 211+22.81, End: 348+40.00

	Curve Length:	350.00'		
	Headlight Distance:	886.31'		
13	280+96.00	0.28%	400.00'	
	Vertical Curve Information:(crest curve)			
	PVC Station:	278+96.00	Elevation:	725.74'
	PVI Station:	280+96.00	Elevation:	731.87'
	PVT Station:	282+96.00	Elevation:	732.43'
	High Point:	282+96.00	Elevation:	732.43'
	Grade in(%):	3.06%	Grade out(%):	0.28%
	Change(%):	2.78%	K:	143.8255132
	Curve Length:	400.00'		
	Passing Distance:	756.02'	Stopping Distance:	438.96'
14	288+40.00	0.41%	300.00'	
	Vertical Curve Information:(sag curve)			
	PVC Station:	286+90.00	Elevation:	733.55'
	PVI Station:	288+40.00	Elevation:	733.97'
	PVT Station:	289+90.00	Elevation:	734.59'
	Low Point:	286+90.00	Elevation:	733.55'
	Grade in(%):	0.28%	Grade out(%):	0.41%
	Change(%):	0.13%	K:	2309.853788
	Curve Length:	300.00'		
	Headlight Distance:			
15	293+50.00	0.49%	300.00'	
	Vertical Curve Information:(sag curve)			
	PVC Station:	292+00.00	Elevation:	735.45'
	PVI Station:	293+50.00	Elevation:	736.07'
	PVT Station:	295+00.00	Elevation:	736.81'
	Low Point:	292+00.00	Elevation:	735.45'
	Grade in(%):	0.41%	Grade out(%):	0.49%
	Change(%):	0.08%	K:	3630.217344
	Curve Length:	300.00'		
	Headlight Distance:			
16	301+52.00	2.77%	800.00'	
	Vertical Curve Information:(sag curve)			
	PVC Station:	297+52.00	Elevation:	738.06'
	PVI Station:	301+52.00	Elevation:	740.04'
	PVT Station:	305+52.00	Elevation:	751.11'
	Low Point:	297+52.00	Elevation:	738.06'
	Grade in(%):	0.49%	Grade out(%):	2.77%
	Change(%):	2.27%	K:	352.0709359
	Curve Length:	800.00'		
	Headlight Distance:	2,105.14'		
17	308+56.00	1.42%	200.00'	

Vertical Alignment: Design Profile G28 No 2
Station Range: Start: 211+22.81, End: 348+40.00

	Vertical Curve Information:(crest curve)			
	PVC Station:	307+56.00	Elevation:	756.75'
	PVI Station:	308+56.00	Elevation:	759.52'
	PVT Station:	309+56.00	Elevation:	760.94'
	High Point:	309+56.00	Elevation:	760.94'
	Grade in(%):	2.77%	Grade out(%):	1.42%
	Change(%):	1.35%	K:	147.987988
	Curve Length:	200.00'		
	Passing Distance:	1,244.22'	Stopping Distance:	591.75'
18	311+64.00	-1.88%	300.00'	
	Vertical Curve Information:(crest curve)			
	PVC Station:	310+14.00	Elevation:	761.76'
	PVI Station:	311+64.00	Elevation:	763.88'
	PVT Station:	313+14.00	Elevation:	761.06'
	High Point:	311+42.90	Elevation:	762.67'
	Grade in(%):	1.42%	Grade out(%):	-1.88%
	Change(%):	3.29%	K:	91.05905393
	Curve Length:	300.00'		
	Passing Distance:	619.37'	Stopping Distance:	351.72'
19	314+78.00	-1.11%	200.00'	
	Vertical Curve Information:(sag curve)			
	PVC Station:	313+78.00	Elevation:	759.86'
	PVI Station:	314+78.00	Elevation:	757.98'
	PVT Station:	315+78.00	Elevation:	756.87'
	Low Point:	315+78.00	Elevation:	756.87'
	Grade in(%):	-1.88%	Grade out(%):	-1.11%
	Change(%):	0.76%	K:	261.5835363
	Curve Length:	200.00'		
	Headlight Distance:			
20	319+50.00	-0.97%	300.00'	
	Vertical Curve Information:(sag curve)			
	PVC Station:	318+00.00	Elevation:	754.39'
	PVI Station:	319+50.00	Elevation:	752.72'
	PVT Station:	321+00.00	Elevation:	751.27'
	Low Point:	321+00.00	Elevation:	751.27'
	Grade in(%):	-1.11%	Grade out(%):	-0.97%
	Change(%):	0.15%	K:	2038.874487
	Curve Length:	300.00'		
	Headlight Distance:			
21	325+61.00	-0.25%	600.00'	
	Vertical Curve Information:(sag curve)			
	PVC Station:	322+61.00	Elevation:	749.71'
	PVI Station:	325+61.00	Elevation:	746.81'

Vertical Alignment: Design Profile G28 No 2
Station Range: Start: 211+22.81, End: 348+40.00

	PVT Station:	328+61.00	Elevation:	746.06'
	Low Point:	328+61.00	Elevation:	746.06'
	Grade in(%):	-0.97%	Grade out(%):	-0.25%
	Change(%):	0.72%	K:	836.0207496
	Curve Length:	600.00'		
	Headlight Distance:			
22	331+58.00	0.27%	250.00'	
	Vertical Curve Information:(sag curve)			
	PVC Station:	330+33.00	Elevation:	745.63'
	PVI Station:	331+58.00	Elevation:	745.32'
	PVT Station:	332+83.00	Elevation:	745.65'
	Low Point:	331+53.86	Elevation:	745.48'
	Grade in(%):	-0.25%	Grade out(%):	0.27%
	Change(%):	0.52%	K:	484.2634653
	Curve Length:	250.00'		
	Headlight Distance:			
23	336+08.00	1.49%	250.00'	
	Vertical Curve Information:(sag curve)			
	PVC Station:	334+83.00	Elevation:	746.19'
	PVI Station:	336+08.00	Elevation:	746.52'
	PVT Station:	337+33.00	Elevation:	748.38'
	Low Point:	334+83.00	Elevation:	746.19'
	Grade in(%):	0.27%	Grade out(%):	1.49%
	Change(%):	1.22%	K:	205.0896245
	Curve Length:	250.00'		
	Headlight Distance:			
24	340+26.00	0.34%	400.00'	
	Vertical Curve Information:(crest curve)			
	PVC Station:	338+26.00	Elevation:	749.76'
	PVI Station:	340+26.00	Elevation:	752.73'
	PVT Station:	342+26.00	Elevation:	753.40'
	High Point:	342+26.00	Elevation:	753.40'
	Grade in(%):	1.49%	Grade out(%):	0.34%
	Change(%):	1.15%	K:	348.1177199
	Curve Length:	400.00'		
	Passing Distance:	1,545.79'	Stopping Distance:	778.38'
25	348+40.00			

108-23A
08-01-08

TRAFFIC CONTROL PLAN

1. This project shall be "CLOSED" to through traffic including vehicles and pedestrians. The access to private property shall be maintained by the contractor during construction.

2. Traffic control devices, procedures, layouts and signing installed as part of this project shall conform to the "manual on Traffic Control devices for Streets and Highways" as adopted by the Department per 761 of the Iowa Adminstration Code (IAC) chapter 130.

3. Traffic Control on this project shall be in accordance with the TC-252 of Standard Road Plans "Situation 1 (Rural)", when outside of City Limits and Situation 1 (Urban) when inside the City Limits.

4. All traffic control devices shall be furnished, erected, maintained and removed by the contractor.

5. Proposed sign spacing may be modified as approved by the Engineer to meet existing field restrictions or to prevent obstructions of the motorist's view of permanent signing.

6. Proposed changes in the traffic control plan shall be reviewed and approved by the Engineer before changes are made.

7. The bid item "Traffic Control" shall include the cost for all traffic control measures required of the contractor except for those which are separate bid items or are incidental to other bid items.

8. All detour signing as shown on the J-Sheets shall be furnished, erected, maintained and removed by the contractor.

9. A traffic Control Diary shall be maintained by the contractor or subcontractor on site and available to the engineer on a weekly basis as per Standard Specification 2528.01.C.

10. The contractor shall notify the Local IDOT Maintenance Shop prior to starting work. Contact Phone Number: (563)-263-6242.

11. The Contractor shall remove and stockpile all existing signs and supports after the road is closed.

12. Muscatine County Maintenance shall pickup stockpiled signs and remove them from project limits.

MUSCATINE-50
04-15-14

TRAFFIC CONTROL NOTE

THE CONTRACTOR SHALL FURNISH, ERECT, OPERATE, MAINTAIN, MOVE AND REMOVE ALL TRAFFIC CONTROL DEVICES REQUIRED BY CURRENT SPECIFICATIONS AND CONFORM TO THE "MANUAL ON UNIFORM TRAFFIC CONTROL DEVICES FOR STREETS AND HIGHWAYS" AS ADOPTED BY THE DEPARTMENT PER 761 OF THE IOWA ADMINISTRATIVE CODE (IAC) CHAPTER 130. ALL SIGNS SHALL BE MAINTAINED ON A 24-HOUR DAY, 7 DAY WEEK BASIS DURING CONSTRUCTION OF THIS PROJECT. CONSTRUCTION WILL BE SUSPENDED IN THE EVENT ANY OF THE REQUIRED LEGIBLE TRAFFIC CONTROL SIGNS ARE NOT IN PLACE AND WILL REMAIN SUSPENDED UNTIL THE DEFICIENCY IS CORRECTED. ALL INTERSECTIONS SHALL BE SIGNED WITH THE APPROPRIATE SITUATION AS SHOWN ON STANDARD TC-252. ALL TYPE 3 BARRICADES SHALL HAVE A MINIMUM OF 4 SANDBAGS.

MUSCATINE-51
04-15-14

TYPE 3 BARRICADES NOTE

ALL TYPE 3 BARRICADES SHALL HAVE TWO (2) TYPE 'A' LOW INTENSITY FLASHING LIGHTS.

MUSCATINE-52
04-15-14

SIGN LOCATION NOTE

ALL SIGNS SHALL BE FURNISHED, ERECTED AND MAINTAINED BY THE CONTRACTOR. EXACT LOCATIONS MAY BE FIELD ADJUSTED, PER MUSCATINE COUNTY ENGINEER'S APPROVAL TO FIT CONDITIONS.

NO SIGNS SHALL BE LOCATED THAT WOULD CAUSE ANY RESTRICTION FOR THE MOTORISTS VIEW OF PERMANENT SIGNING, OR ANY VEHICLE TRAVELING, ENTERING OR EXITING THE ROADWAY.

108-26A
08-01-08

STAGING NOTES

GENERAL STAGING NOTES:

THIS PLAN WAS DEVELOPED TO ALLOW RESIDENTS ACCESS DURING CONSTRUCTION OF THIS PROJECT. ANY DEVIATIONS FROM THIS PLAN WILL NEED TO BE AGREEABLE WITH THE ENGINEER, RESIDENTS, AND BUSINESSES.

THE CONTRACTOR SHALL MAINTAIN ACCESS FROM AT LEAST ONE DIRECTION AT ALL TIMES FOR ALL BUSINESSES AND RESIDENTS ALONG THE PROJECT ROUTE.

THE CONTRACTOR WILL BE REQUIRED TO COMPLETE ALL ITEMS OF WORK WITHIN THE LIMITS OF EACH STAGE, WITH THE EXCEPTION OF PAVEMENT MARKING ITEMS, PRIOR TO BEGINNING WORK IN ANY OTHER STAGES. WITH APPROVAL OF THE ENGINEER, IT MAY BE POSSIBLE FOR THE CONTRACTOR TO WORK ON TWO STAGES SIMULTANEOUSLY THAT ARE NOT ABBUTING EACH OTHER, AND ARE ALLOWING ACCESS TO RESIDENTS AND BUSINESSES, AS INTENDED BY THIS STAGING PLAN.

PAVEMENT MARKING ITEMS MAY BE COMPLETED AT THE END, AFTER COMPLETION OF ALL STAGES OF WORK.

STAGE 1
STATION 211+93 TO STATION 264+28±
231ST STREET G28, FROM JUST EAST OF INDEPENDENCE AVENUE X43, EAST TO THE CENTERLINE OF JASPER AVENUE (NORTH AND SOUTH). THIS STAGE INCLUDES PAVING AND ASSOCIATED WORK ON THE WEST 1/2 OF JASPER AVENUE RETURNS (NORTH AND SOUTH).

STAGE 2
STATION 264+28± TO STATION 342+00
231ST STREET G28, FROM THE CENTERLINE OF JASPER AVENUE, EAST TO THE END OF PROJECT, JUST WEST OF HIGH PRAIRIE ROAD. THIS STAGE INCLUDES PAVING AND ASSOCIATED WORK ON THE EAST 1/2 OF JASPER AVENUE RETURNS (NORTH AND SOUTH).

PROJECT LOCATION

DETOUR ROUTE

DETOUR ROUTE LOCATION

FILE NO.	ENGLISH	DESIGN TEAM	WHITE\MICHAEL\HORESOWSKY	MUSCATINE COUNTY	PROJECT NUMBER	FM-C070(67)--55-70	SHEET NUMBER	J2

M:\PCC Paving\FM-C070(67)--55-70_231st_St-G28\DWG\J Plan Sheets.dwg, Sheet J2, 11/16/2018 11:25:25 AM

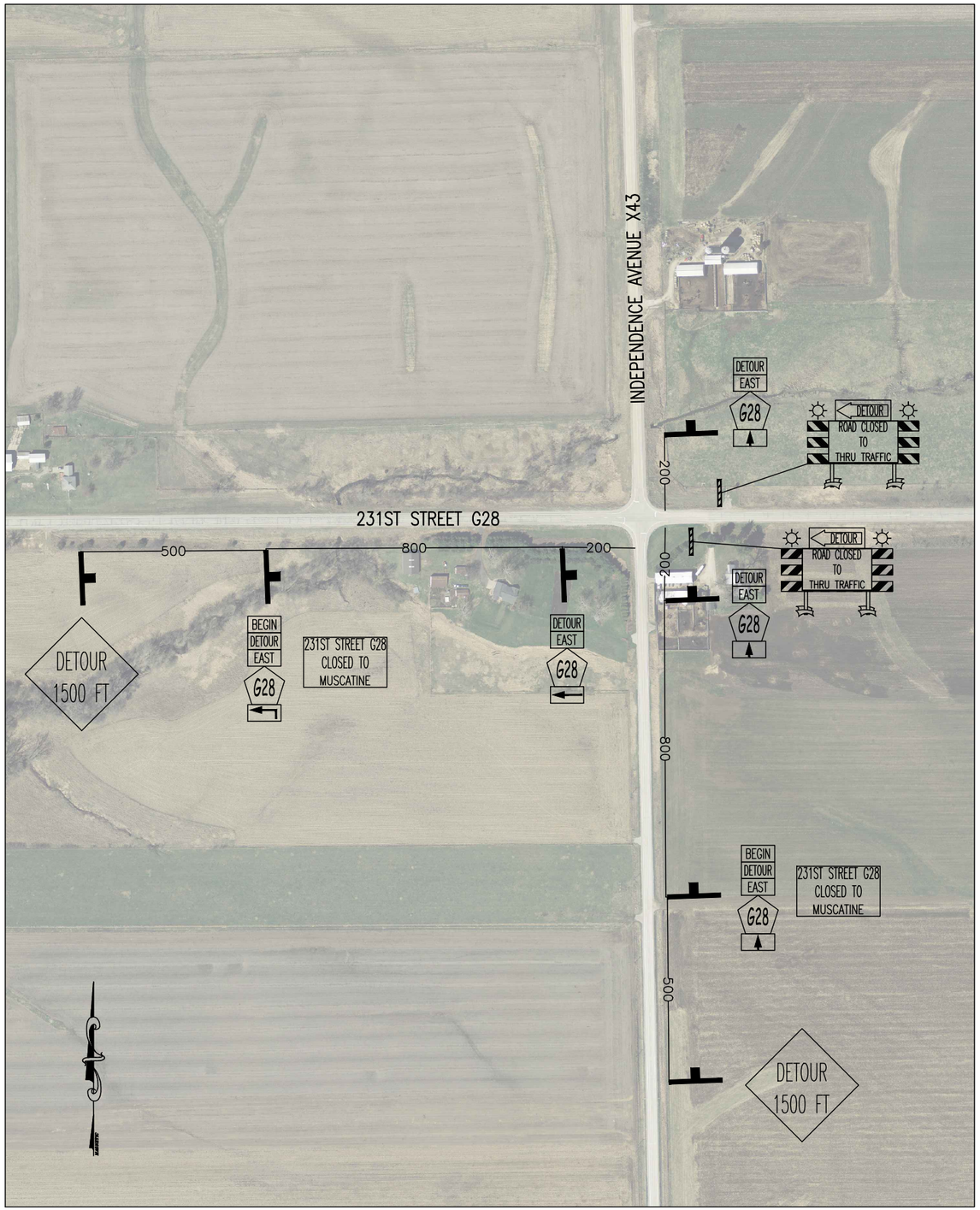

INDEPENDENCE AVENUE & 231ST STREET

NOTE:
ALL SIGNS SHALL BE FURNISHED, ERECTED, AND MAINTAINED BY THE CONTRACTOR. EXACT LOCATIONS MAY BE FIELD ADJUSTED TO FIT CONDITIONS WITH APPROVAL FROM THE ENGINEER.

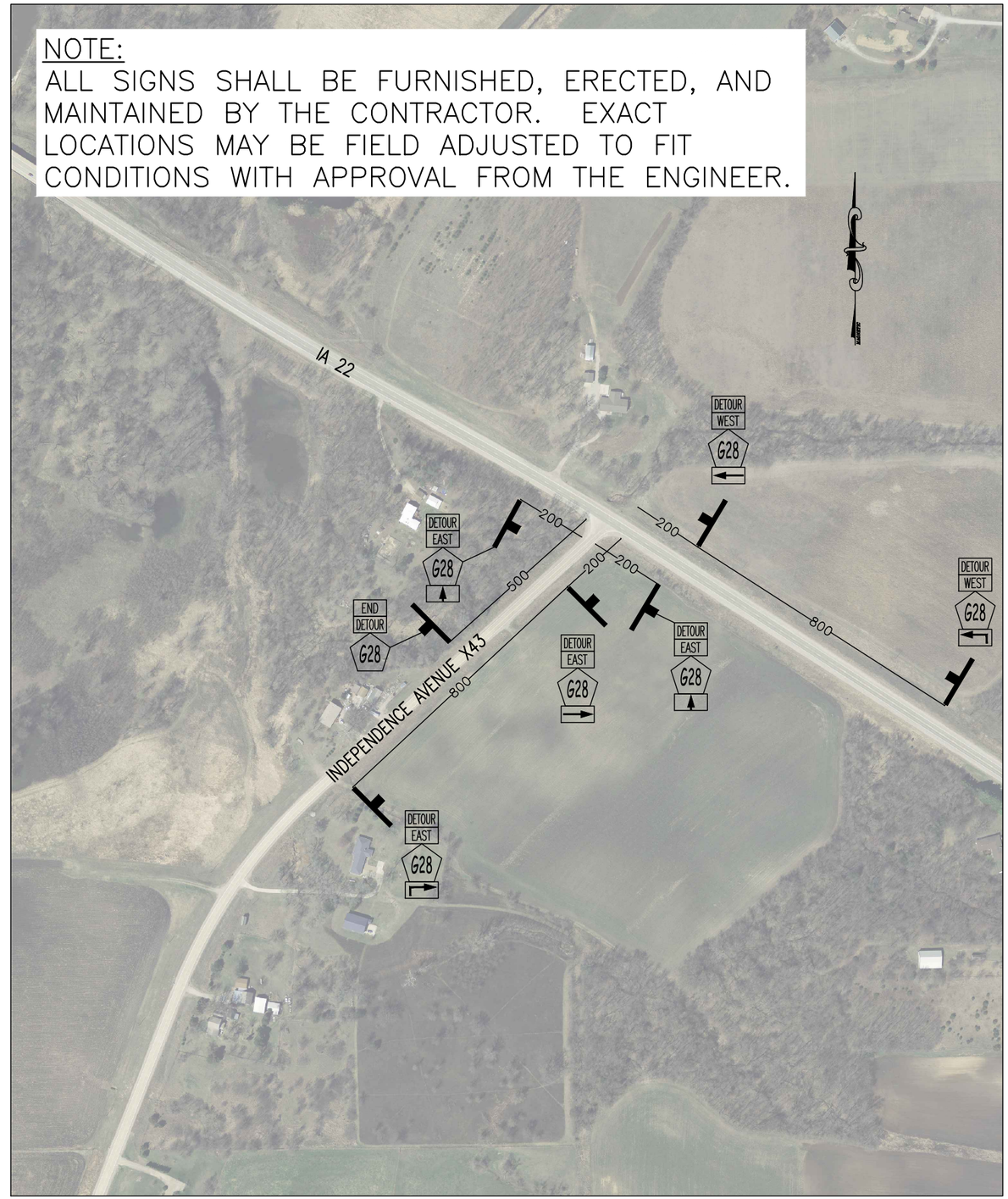

IA 22 & INDEPENDENCE AVENUE

FILE NO.	ENGLISH	DESIGN TEAM WHITE\MICHAEL\HORESOWSKY	MUSCATINE COUNTY	PROJECT NUMBER	FM-C070(67)--55-70	SHEET NUMBER	J3

NOTE:
ALL SIGNS SHALL BE FURNISHED, ERECTED, AND MAINTAINED BY THE CONTRACTOR. EXACT LOCATIONS MAY BE FIELD ADJUSTED TO FIT CONDITIONS WITH APPROVAL FROM THE ENGINEER.

IA 22 & HIGH PRAIRIE ROAD

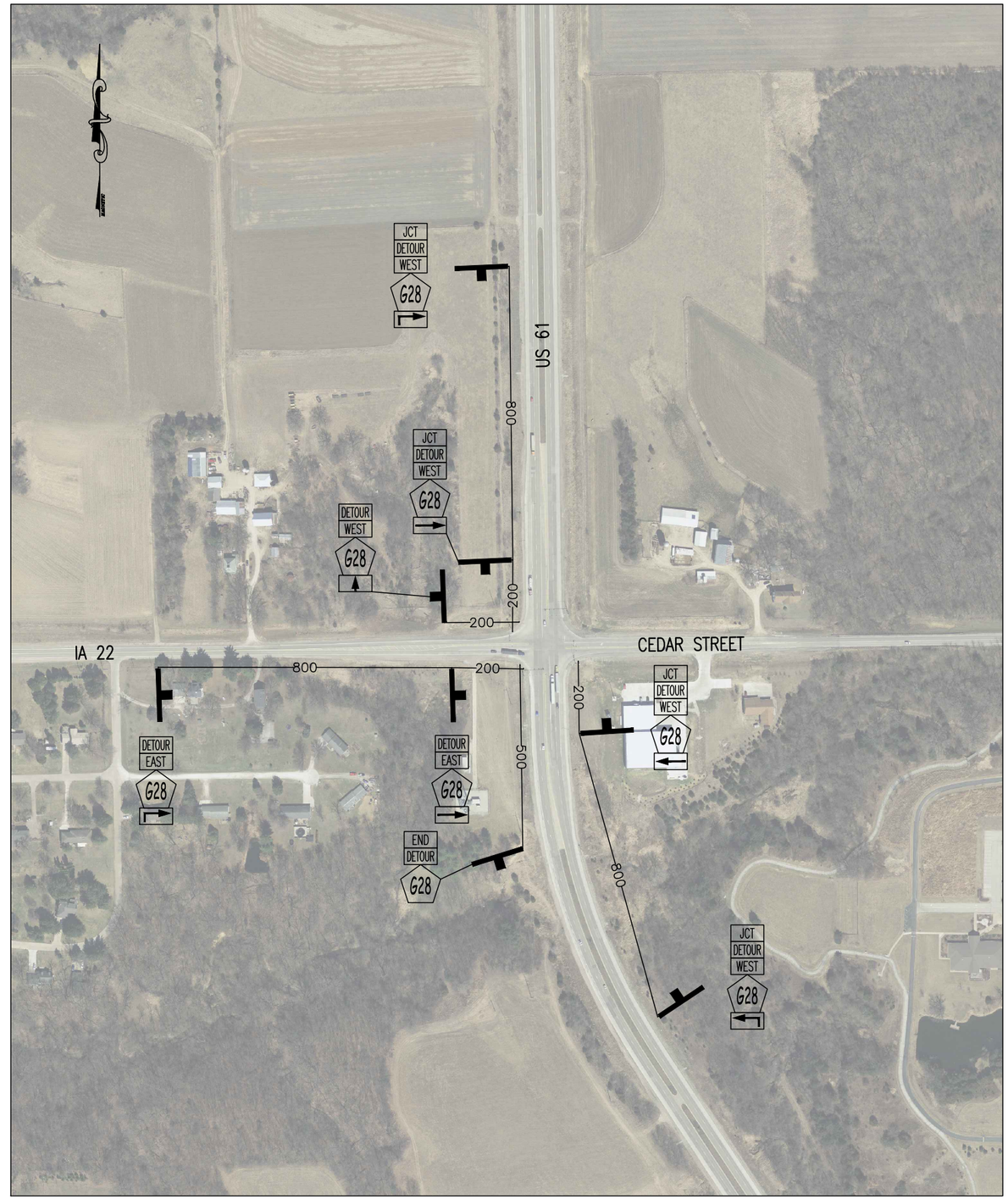

IA 22 & US 61

FILE NO.	ENGLISH	DESIGN TEAM	WHITE\MICHAEL\HORESOWSKY	MUSCATINE COUNTY	PROJECT NUMBER	FM-C070(67)--55-70	SHEET NUMBER	J4

M:\PCC Paving\FM-C070(67)--55-70_231st_St-G28\DWG\J Plan Sheets.dwg, Sheet J4, 11/16/2018 11:25:39 AM

NOTE:
ALL SIGNS SHALL BE FURNISHED, ERECTED, AND MAINTAINED BY THE CONTRACTOR. EXACT LOCATIONS MAY BE FIELD ADJUSTED TO FIT CONDITIONS WITH APPROVAL FROM THE ENGINEER.

IA 22 & US 61

FILE NO.	ENGLISH	DESIGN TEAM WHITE\MICHAEL\HORESOWSKY	MUSCATINE COUNTY	PROJECT NUMBER	FM-C070(67)--55-70	SHEET NUMBER	J5

M:\PCC Paving\FM-C070(67)--55-70_231st_St-G28\DWG\J Plan Sheets.dwg, Sheet J5, 11/16/2018 11:25:44 AM