Bridge Approach

BR

SECTION

BR

Bridge Approach

NO.	DATE	TITLE
BR-101	04-21-15	Bridge Approach Section (General Details)
BR-102	10-17-17	Bridge Approach Section (Two-Lane, Abutting PCC Pavement)
BR-103	10-17-17	Bridge Approach Section (Two-Lane for Bridge Reconstruction, PCC Pavement)
BR-104	10-17-17	Bridge Approach Section (at Existing Bridges, PCC Pavement)
BR-105	04-21-15	Bridge Approach Section (Two-Lane, HMA Pavement)
BR-106	04-21-15	Bridge Approach Section (Two-Lane for Bridge Reconstruction, HMA Pavement)
BR-107	04-21-15	Bridge Approach Section (at Existing Bridges, HMA Pavement)
BR-111	04-21-15	PCC Overlay of Reinforced Bridge Approach Section
BR-112	10-17-17	Bridge Approach Details (in Conjunction with Bridge Deck Overlay)
BR-121	04-21-15	Bridge Approach Details (Secondary Roads)
BR-201	10-17-17	Double Reinforced 10" Approach
BR-202	10-17-17	Double Reinforced 10" Approach with Variable Depth Paving Notch
BR-203	10-17-17	Double Reinforced 12" Approach
BR-204	10-17-17	Double Reinforced 12" Approach with Variable Depth Paving Notch
BR-205	10-15-19	Double Reinforced 12" Approach (Slab Bridge)
BR-211	10-17-17	Bridge Approach (Abutting PCC or Composite Pavement)
BR-212	04-21-15	Bridge Approach (Abutting HMA Pavement)
BR-213	04-21-15	Bridge Approach (Abutting Pavement)
BR-231	10-17-17	Bridge Approach (Multi-Lane, Curbed Roadway)
BR-241	04-18-17	Double Reinforced 10" Approach On Gravel Roads

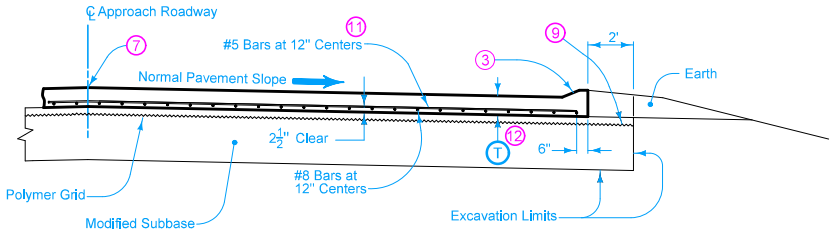

SECTION A-A

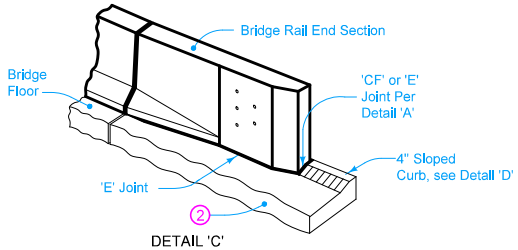

DETAIL 'C'

Five Hole Bridge Rail End Section

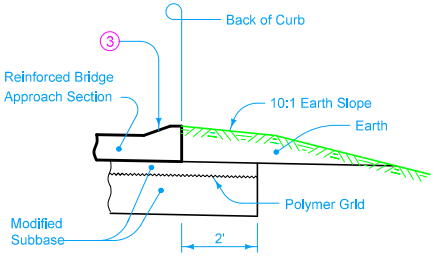

SECTION B-B

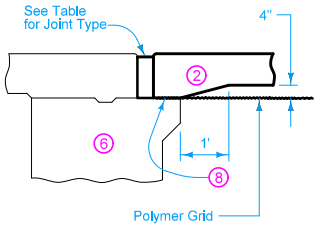

DETAIL 'A'

Movable Abutment Bridge

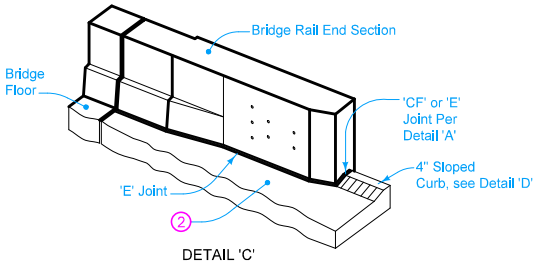

DETAIL 'C'

Retrofit Bridge Rail End Section

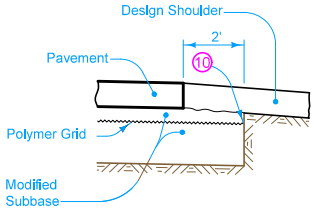

SECTION C-C

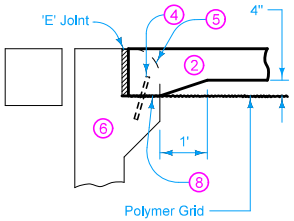

DETAIL 'A'

Fixed Abutment Bridge

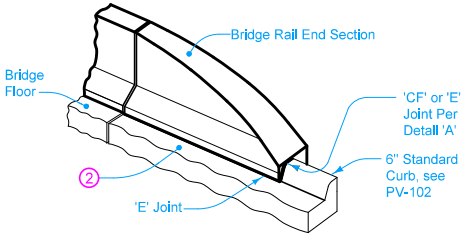

DETAIL 'C'

Low Speed Bridge Rail End Section

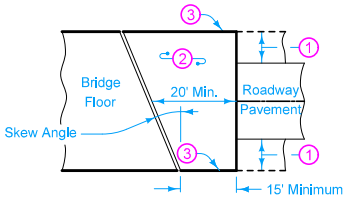

TWO LANE APPROACH PAVEMENT LAYOUT AT A SKEW

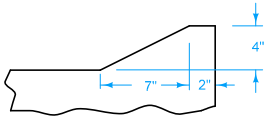

DETAIL 'D'

4" Sloped Curb

CURB ALIGNMENT AND JOINT PLACEMENT

Sections and details apply to Standard Road Plans BR-112 and BR-102 through BR-107.

1. Design Shoulder width.
2. Reinforced Bridge Approach Section.
3. Build curb. See Detail 'C'.
4. Reinforcing Bar.
5. Temporary paving block removed by paving contractor.
6. Bridge Abutment.
7. Longitudinal Joint (PV-101):
   Single pour - Saw cut joint per Detail B.
   Two pours - Use 'KS-1' joint.
8. Secure polymer grid on top of paving notch.
9. Extend polymer grid to 2 feet outside edge of pavement.
10. Trim fabric to edge of excavation.
11. If bridge is skewed, place additional #5 bar parallel to skewed face.
12. T = 10 inches.

JOINT TYPE FOR MOVABLE ABUTMENT BRIDGES		
Joint	Concrete Beam Maximum Bridge Length	Steel Girder Maximum Bridge Length
CF-1	370'	250'
CF-2	465'	320'
CF-3	575'	400'

Possible Contract Item:
Bridge Approach, Two Lane

Possible Tabulation:
112-6

IOWA DOT

STANDARD ROAD PLAN

REVISION	
New	04-21-15

BR-101

SHEET 1 of 1

REVISIONS: New. Replaces RK-19A.

Brian Smith
APPROVED BY DESIGN METHODS ENGINEER

BRIDGE APPROACH SECTION (GENERAL DETAILS)

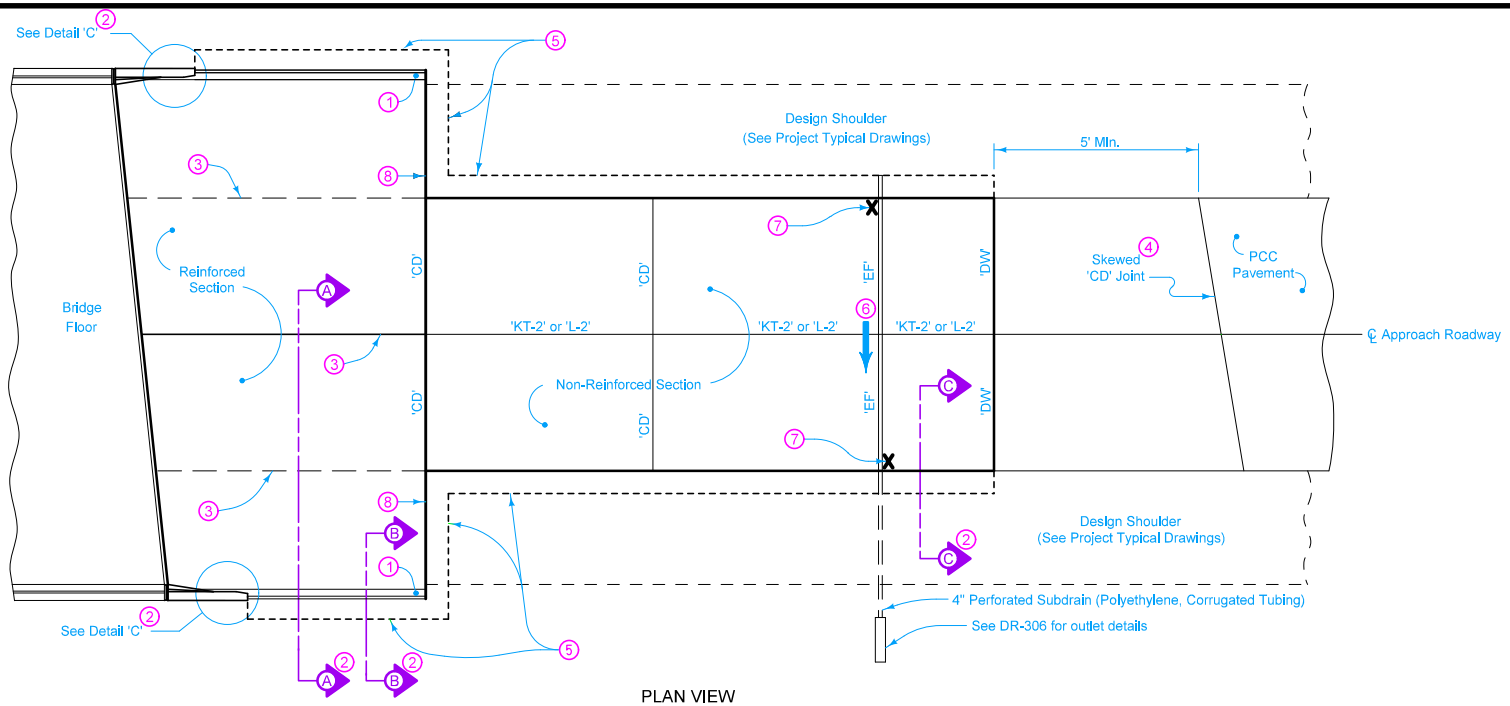

PLAN VIEW

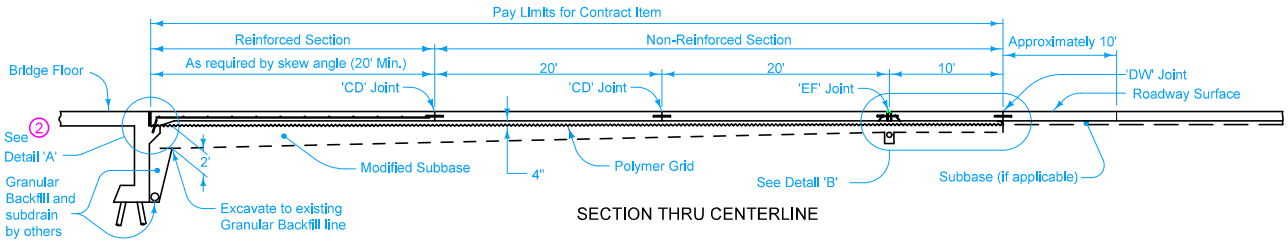

SECTION THRU CENTERLINE

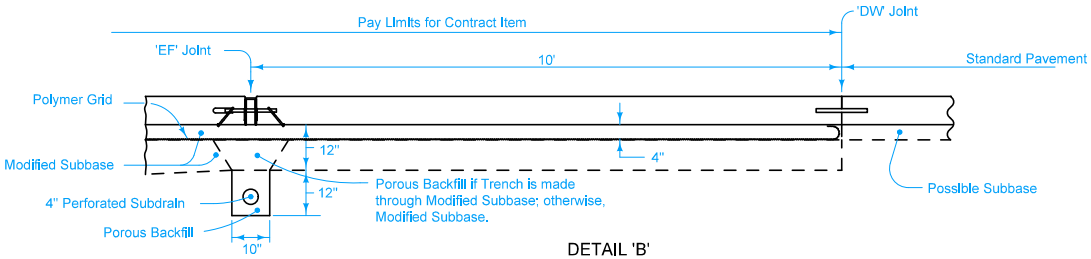

DETAIL 'B'
Doweled PCC Pavement

For joint details, see PV-101.

1. Build curb to end of Reinforced Bridge Approach Section. See Curb Location Details (Section B-B on BR-101).
2. See BR-101.
3. Longitudinal Joint (PV-101):
   Single Pour - Saw cut joint per Detail B.
   Two Pours - Use 'KS-1' joint.
4. 'CD' Joints required up to 300 feet each way from end of Reinforced Bridge Approach Section.
5. Excavation limits of Modified Subbase 2 feet outside of pavement edge, see BR-101.
6. Slope subdrain to drain.
7. Place an "X" in the plastic concrete near the 'EF' joint at the outside edge of pavement.
8. Place 'RD' joint where PCC shoulder. Place 'B' joint otherwise.

Possible Contract Item:
Bridge Approach, Two Lane

Possible Tabulation:
112-6

IOWA DOT

REVISION	
1	10-17-17

STANDARD ROAD PLAN

BR-102

SHEET 1 of 1

REVISIONS: Changed DR-304 to DR-306.

Brian Smith
APPROVED BY DESIGN METHODS ENGINEER

BRIDGE APPROACH SECTION (TWO-LANE, ABUTTING PCC PAVEMENT)

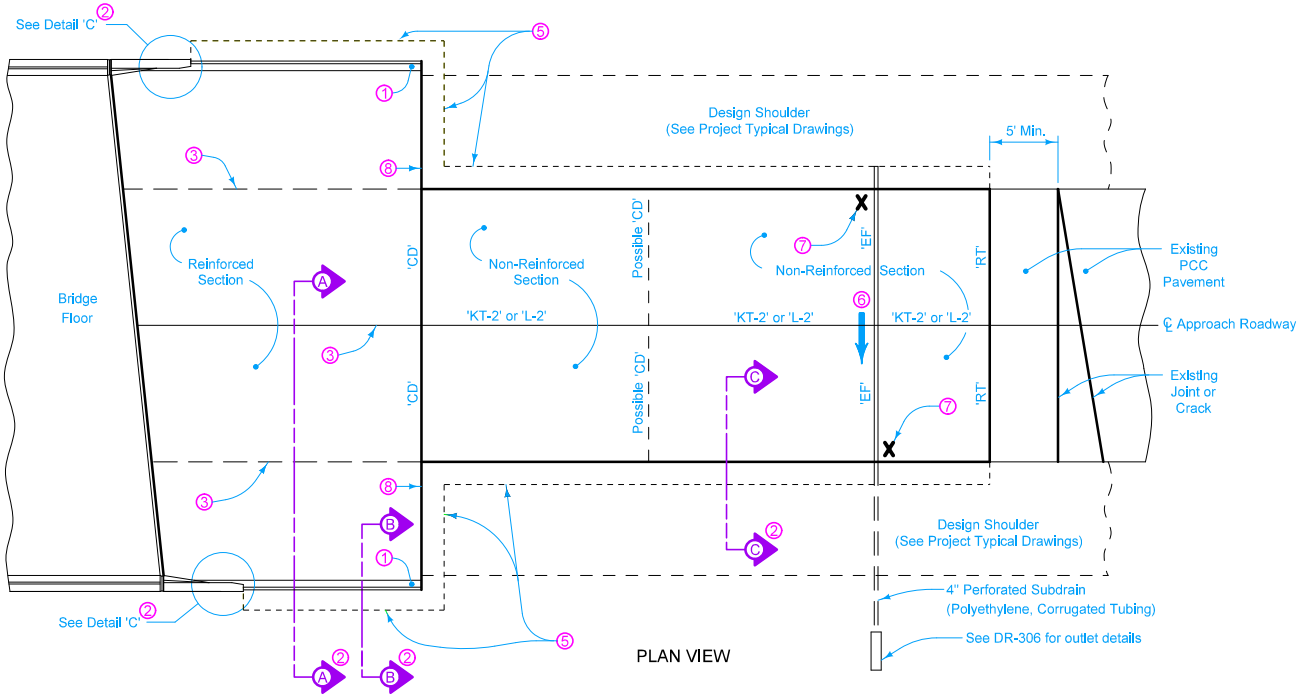

PLAN VIEW

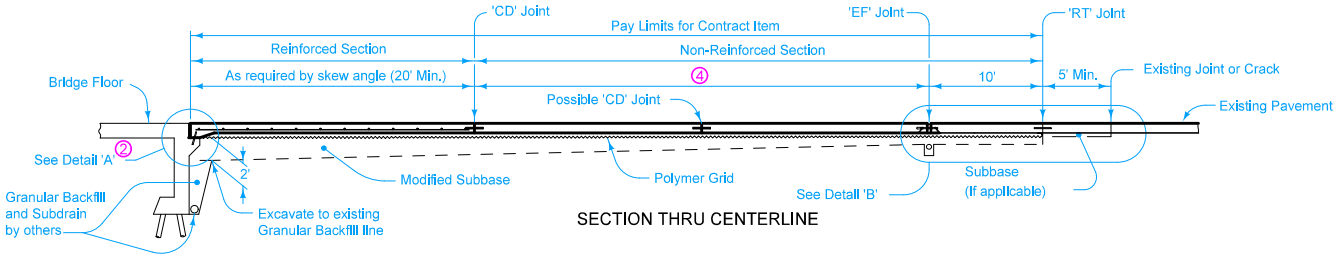

SECTION THRU CENTERLINE

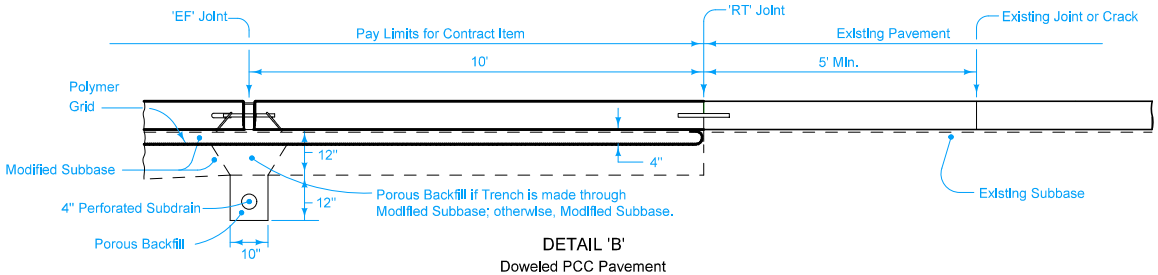

DETAIL 'B'
Doweled PCC Pavement

For joint details, see PV-101.

1. Build curb to end of Reinforced Bridge Approach Section. See Curb Location Details (Section B-B on BR-101).
2. See BR-101.
3. Longitudinal Joint (PV-101):
   Single Pour - Saw cut joint per Detail B.
   Two Pours - Use 'KS-1' joint.
4. Minimum 1 panel, maximum 3 panels. 15 foot minimum, 20 foot maximum panel length. Use 'CD' joints.
5. Excavation limits of Modified Subbase 2 feet outside of pavement edge, see BR-101.
6. Slope subdrain to drain.
7. Place an "X" in the plastic concrete near the 'EF' joint at the outside edge of pavement.
8. Place 'RD' joint where PCC shoulder. Place 'B' joint otherwise.

Possible Contract Item:
Bridge Approach, Two Lane

Possible Tabulation:
112-6

IOWA DOT

REVISION	
1	10-17-17

STANDARD ROAD PLAN

BR-103

SHEET 1 of 1

REVISIONS: Changed DR-304 to DR-306.

Brian Smith
APPROVED BY DESIGN METHODS ENGINEER

BRIDGE APPROACH SECTION (TWO-LANE FOR BRIDGE RECONSTUCTION, PCC PAVEMENT)

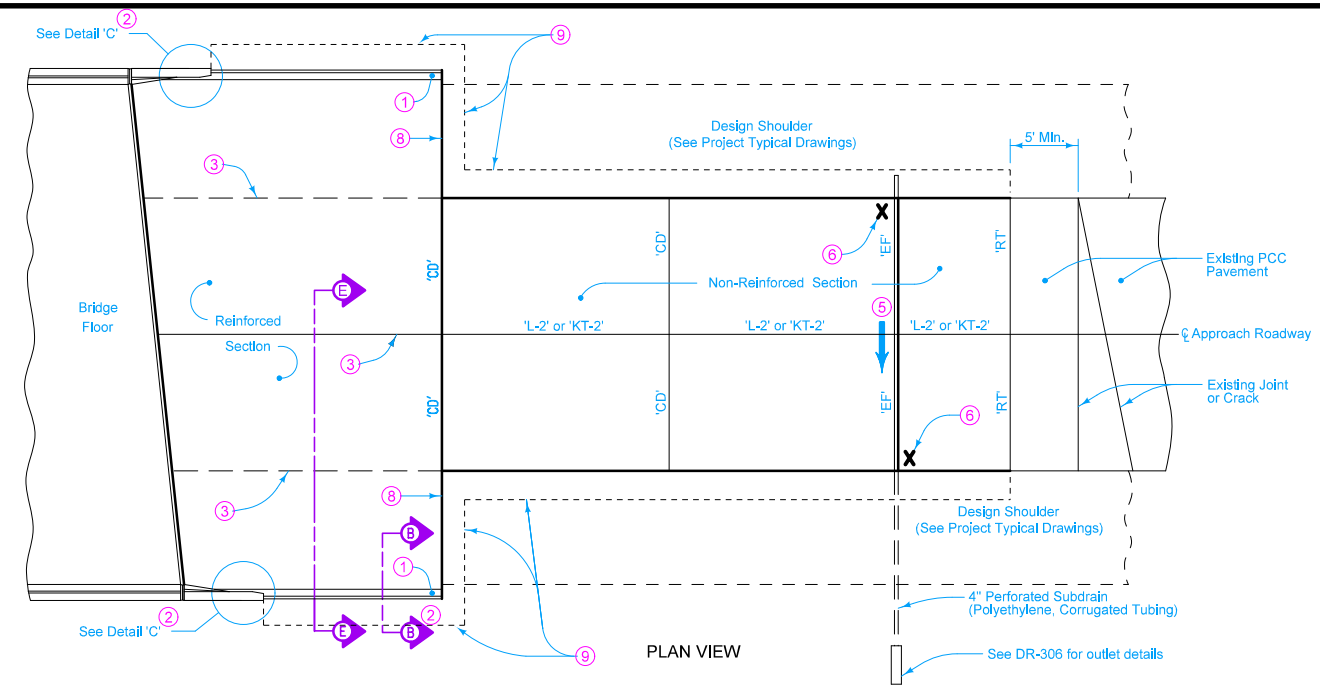

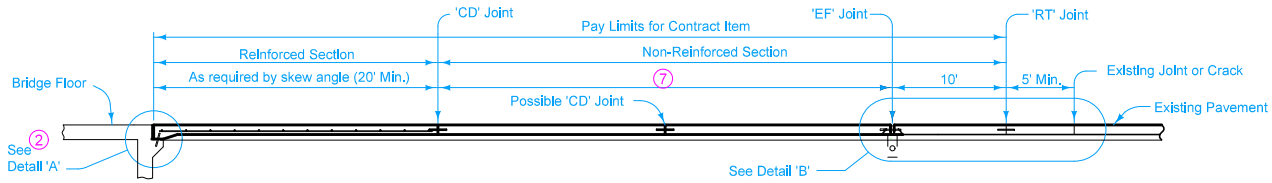

SECTION THRU CENTERLINE

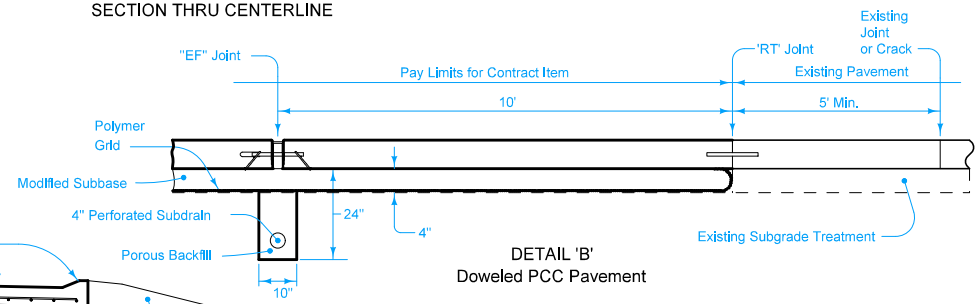

DETAIL 'B'
Doweled PCC Pavement

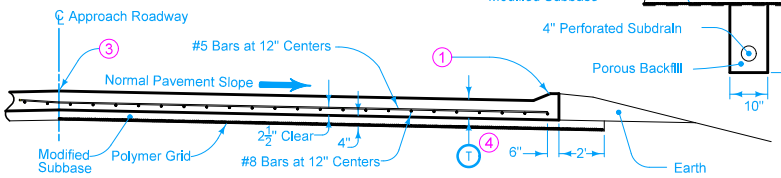

SECTION E-E

For joint details, see PV-101.

1. Build curb to end of Reinforced Bridge Approach Section. See Curb Location Details (Section B-B on BR-101).
2. See BR-101.
3. Longitudinal Joint (PV-101):
   Single Pour - Saw cut joint per Detail B.
   Two Pours - Use 'KS-1' joint.
4. T = 10 inches.
5. Slope subdrain to drain.
6. Place an "X" in the plastic concrete near the 'EF' joint at the outside edge of pavement.
7. Minimum 1 panel, maximum 3 panels. 15 foot minimum, 20 foot maximum panel length. Use 'CD' joints.
8. Place 'RD' joint where PCC shoulder. Place 'B' joint otherwise.
9. Excavation limits of Modified Subbase 2 feet outside of pavement edge, see BR-101.

Possible Contract Item:
Bridge Approach, Two Lane

Possible Tabulation:
112-6

IOWA DOT

STANDARD ROAD PLAN

REVISION	
1	10-17-17

BR-104

SHEET 1 of 1

REVISIONS: Changed DR-304 to DR-306.

Brian Smith
APPROVED BY DESIGN METHODS ENGINEER

BRIDGE APPROACH SECTION
(AT EXISTING BRIDGES, PCC PAVEMENT)

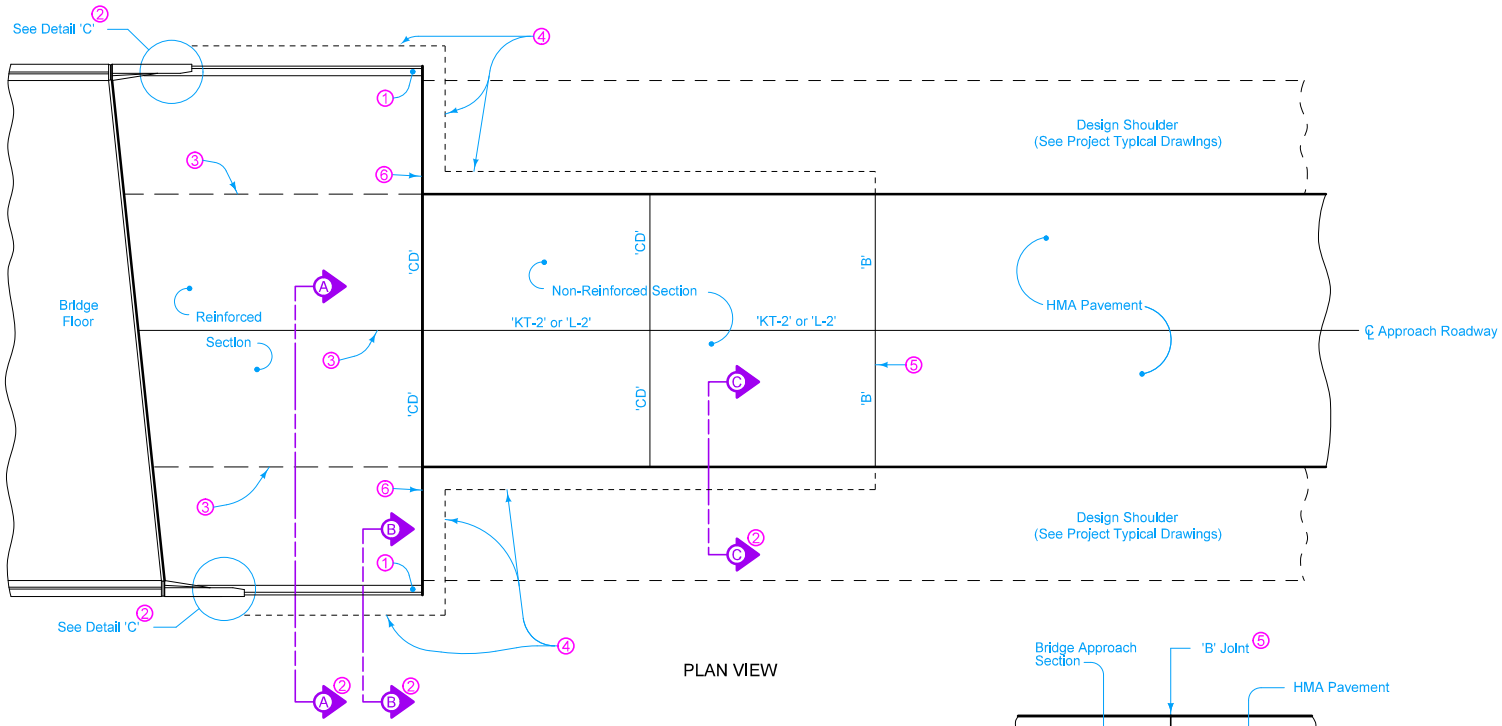

PLAN VIEW

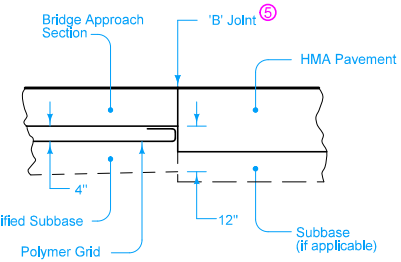

DETAIL 'B'

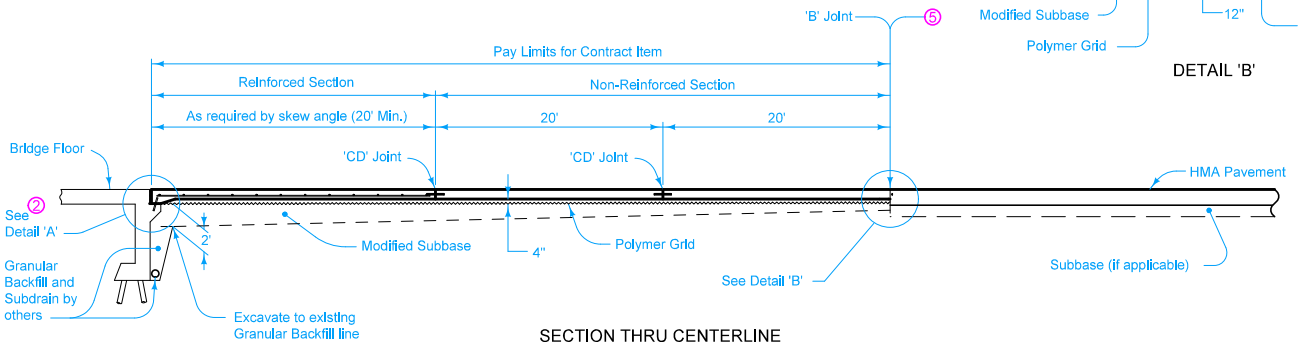

SECTION THRU CENTERLINE

For joint details, see PV-101.

1. Build curb to end of Reinforced Bridge Approach Section. See Curb Location Details (Section B-B on BR-101).
2. See BR-101.
3. Longitudinal Joints (PV-101):
   Single Pour - Saw cut joint per Detail B.
   Two Pours - Use 'KS-1' joint.
4. Excavation limits of Modified Subbase 2 feet outside of pavement edge, see BR-101.
5. The Contractor may need to saw cut the HMA pavement full depth to accommodate the 'B' joint.
6. Place 'RD' joint where PCC shoulder. Place 'B' joint otherwise.

Possible Contract Item:
Bridge Approach, Two Lane

Possible Tabulation:
112-6

IOWA DOT

STANDARD ROAD PLAN

REVISION	
New	04-21-15

BR-105

SHEET 1 of 1

REVISIONS: New. Replaces RK-19G.

Brian Smith
APPROVED BY DESIGN METHODS ENGINEER

BRIDGE APPROACH SECTION (TWO-LANE, HMA PAVEMENT)

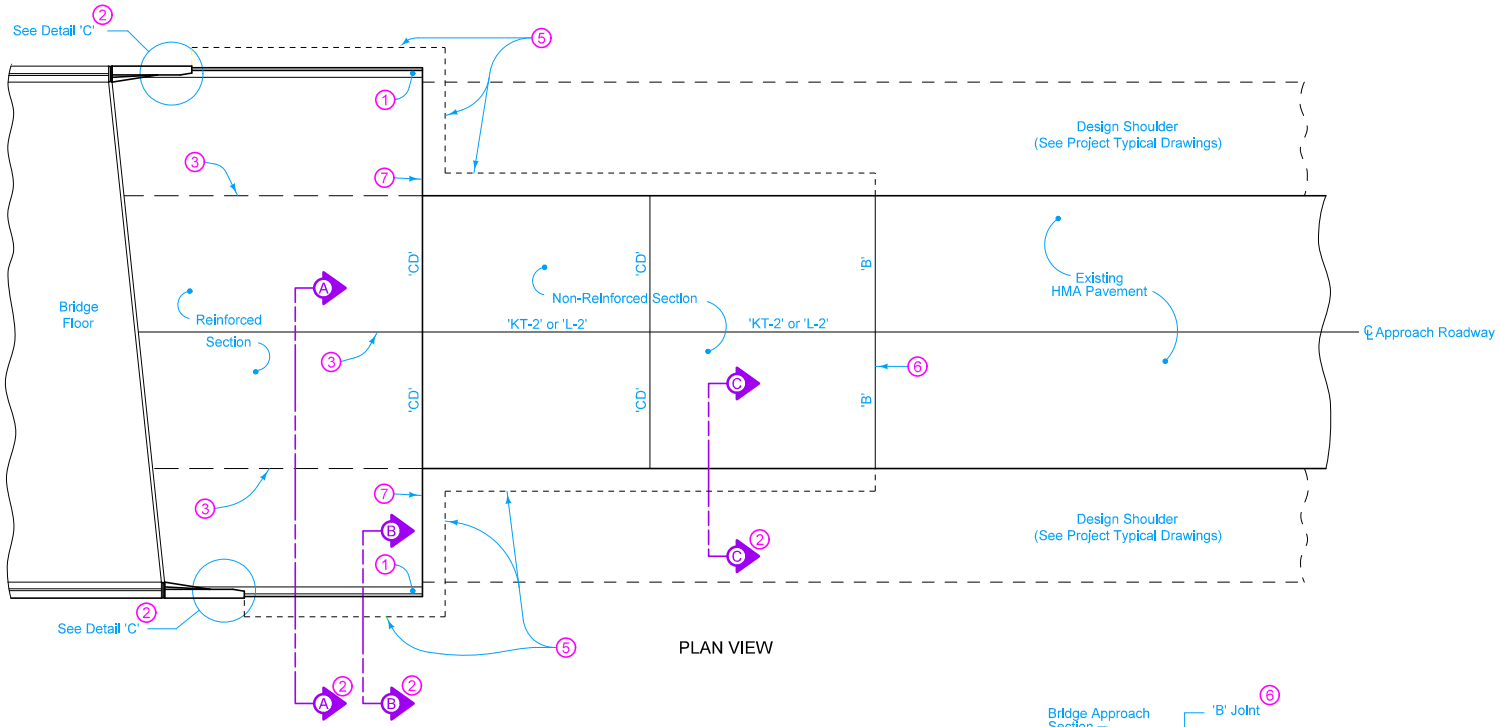

PLAN VIEW

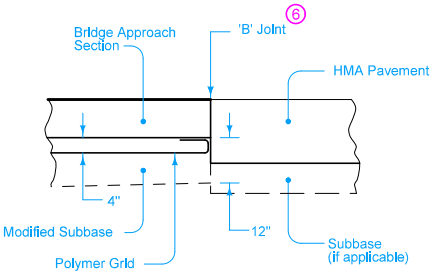

DETAIL 'B'

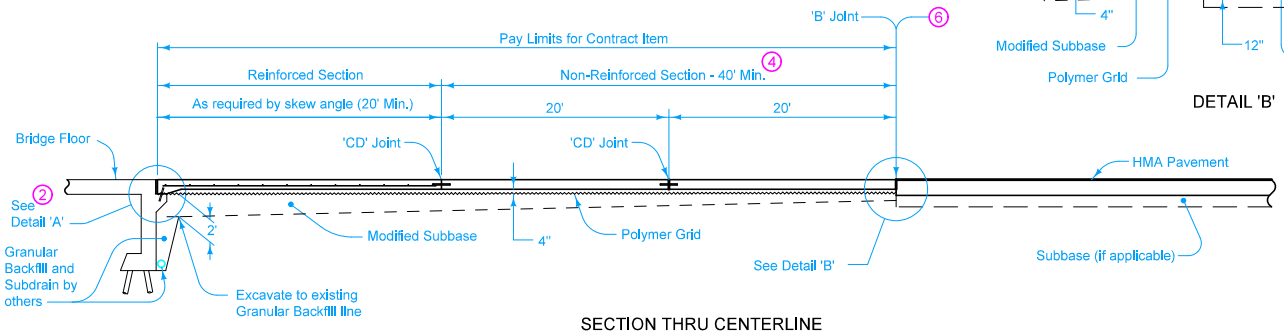

SECTION THRU CENTERLINE

For joint details, see PV-101.

1. Build curb to end of Reinforced Bridge Approach Section. See Curb Location Details (Section B-B on BR-101).
2. See BR-101.
3. Longitudinal Joint (PV-101):
   Single Pour - Saw cut joint per Detail B.
   Two Pours - Use 'KS-1' joint.
4. Minimum 2 panels, maximum 3 panels. 20 foot panel length. Use 'CD' joints.
5. Excavation limits of Modified Subbase 2 feet outside of pavement edge, see BR-101.
6. The Contractor may need to saw cut the HMA pavement full depth to accommodate the 'B' joints.
7. Place 'RD' joint where PCC shoulder. Place 'B' joint otherwise.

Possible Contract Item:
Bridge Approach, Two Lane

Possible Tabulation:
112-6

IOWA DOT

STANDARD ROAD PLAN

REVISION	
New	04-21-15

BR-106

SHEET 1 of 1

REVISIONS: New. Replaces RK-19H.

Brian Smith
APPROVED BY DESIGN METHODS ENGINEER

BRIDGE APPROACH SECTION (TWO-LANE FOR BRIDGE RECONSTRUCTION, HMA PAVEMENT)

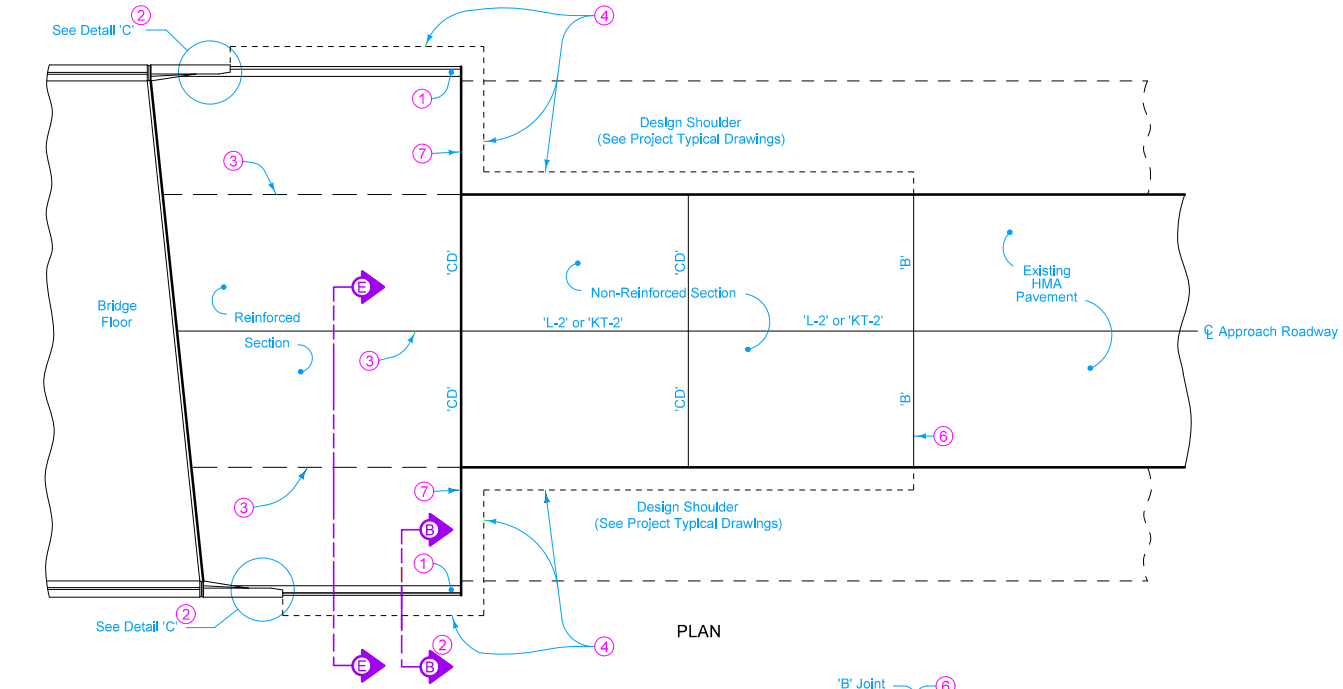

PLAN

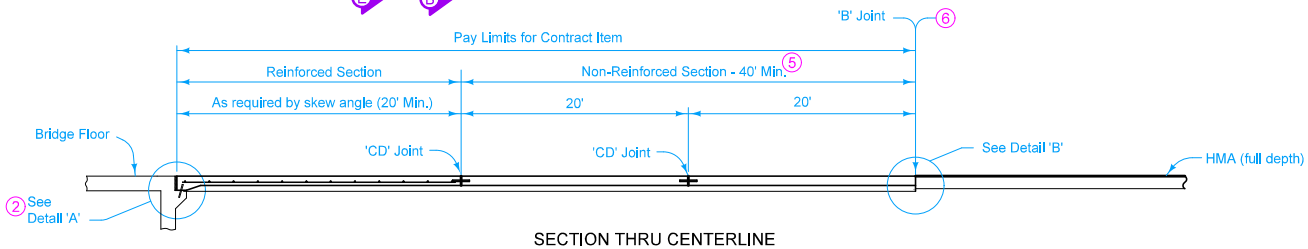

SECTION THRU CENTERLINE

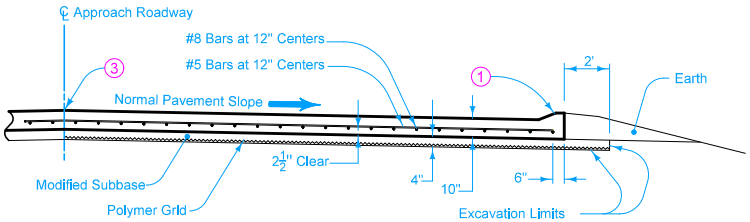

SECTION E-E

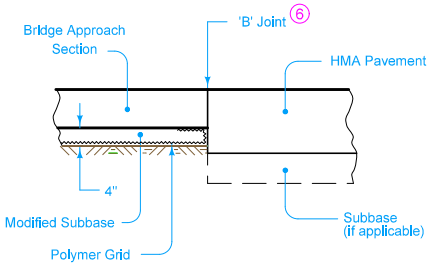

DETAIL 'B'

For joint details, see PV-101.

1. Build curb to end of Reinforced Bridge Approach Sections. See Curb Location Details (Section B-B on BR-101).
2. See BR-101.
3. Longitudinal Joints (PV-101):
   Single Pour - Saw cut joint per Detail B.
   Two Pours - Use 'KS-1' joint.
4. Excavation limits of Modified Subbase 2 feet outside of pavement edge, see BR-101.
5. Minimum 2 panels, maximum 3 panels 20 foot panel length. Use 'CD' joints.
6. The contractor may needto saw cut the HMA pavement full depth to accommodate the 'B' joint.
7. Place 'RD' joint where PCC shoulder. Place 'B' joint otherwise.

Possible Contract Item:
Bridge Approach, Two Lane

Possible Tabulation:
112-6

IOWA DOT

STANDARD ROAD PLAN

REVISION	
New	04-21-15

BR-107

SHEET 1 of 1

REVISIONS: New. Replaces RK-19J.

Brian Smith
APPROVED BY DESIGN METHODS ENGINEER

BRIDGE APPROACH SECTION
(AT EXISTING BRIDGES, HMA PAVEMENT)

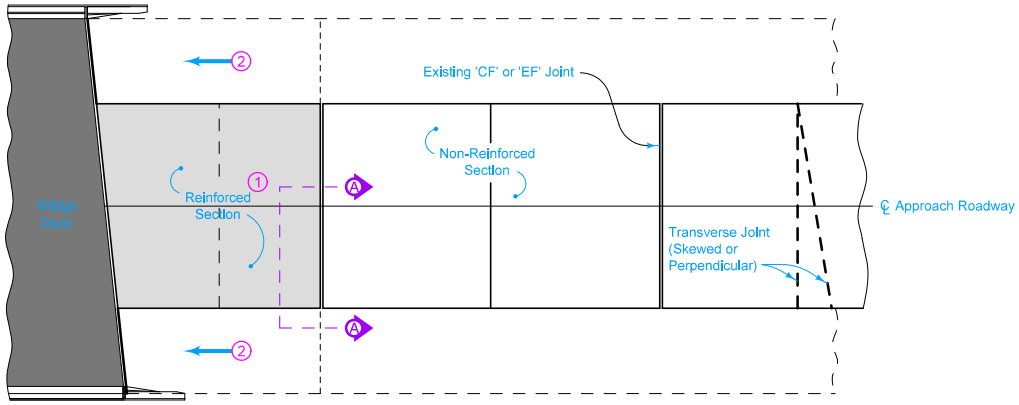

TYPICAL PLAN VIEW

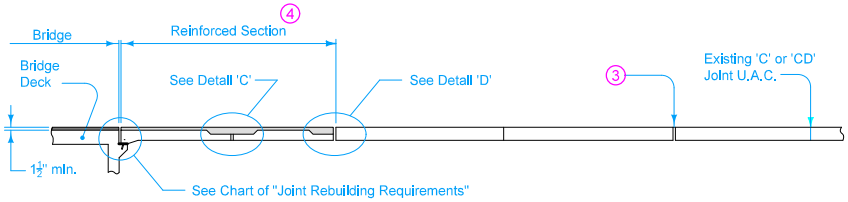

TYPICAL SECTION THRU CENTERLINE

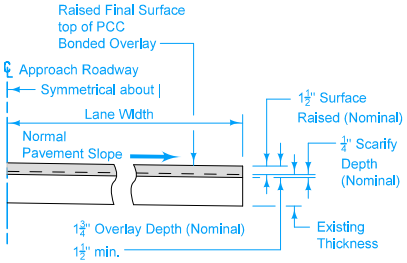

SECTION A-A

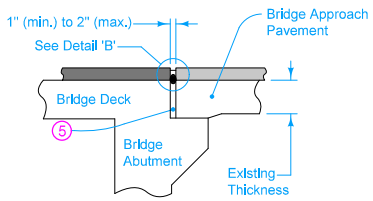

DETAIL 'A'

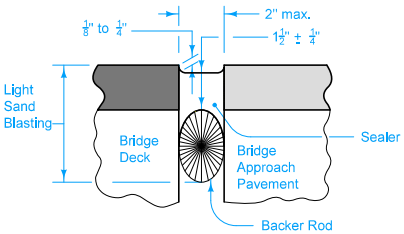

DETAIL 'B'

JOINT REBUILDING REQUIREMENTS	
EXISTING JOINT WIDTH	CONSTRUCTION METHOD REQUIRED
0 to 1"	Cut to 1½" width See Detail 'A'
1" to 2"	See Detail 'A'
Greater than 2"	See Detail 'E'

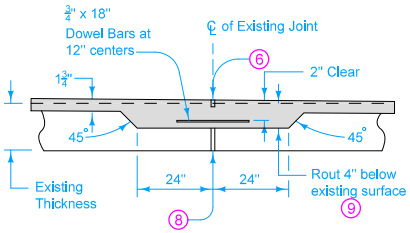

DETAIL 'C'

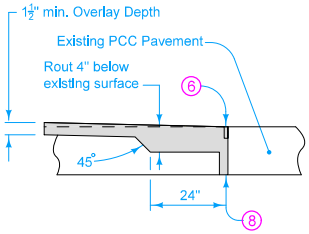

DETAIL 'D'

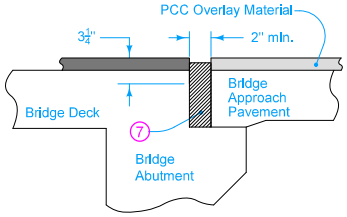

DETAIL 'E'
Where Existing Joint is greater than 2"

1. Remove HMA Resurfacing if present. The cost of removal is considered incidental to "Bridge Floor Overlay" as detailed hereon.
2. Existing shoulder elevation to be raised to match new pavement grade.
3. At first existing 'CF' joint beyond PCC Overlay area, clean joint, trim to $3\frac{3}{4}$" + $\frac{1}{2}$" and install preformed joint material $4\frac{1}{2}$" + $\frac{1}{8}$" wide times pavement thickness minus 1 inch deep with lubricant adhesive. See Materials I.M. 436.05 for list of approved materials.
4. Reinforced bridge approach section overlay "Runout" slope not to exceed 1 inch in 50 feet from profile grade.
5. Existing joint. Remove all expansion material and clean joint area. Do not overlay and saw cut.
6. Saw and seal over existing joint. Refer to Detail 'C' on PV-101.
7. Tire buffings. Refer to Detail 'H' on PV-101.
8. Existing joint. Remove all expansion material and fill with overlay material.
9. Applicable only if a transverse crack in the reinforced section exists.

This plan shows construction details of a PCC Overlay on a bridge approach section to match the thickness of the bridge deck overlay.

After undersealing (by others), work is to proceed in the following sequence and according to the traffic control plans:

1. Rout out existing joints as detailed in the plans.
2. Scarify to the minimum depth of $\frac{1}{4}$" the existing PCC surface of the reinforced bridge approach section. Scarify deep enough to provide a minimum overlay thicknessof $1\frac{1}{2}$".
3. Overlay the scarified approach pavement with PCC according to Section 2413 of the Standard Specifications. The existing joint at the bridge end is not to be overlaid and cut out by saw. Use a method approved by the Engineer.
4. Install sealed joint at the bridge end and at the locations of overlaid existing joints as detailed on this sheet.
5. Trim the first existing 'CF' joint beyond the resurfaced area to a uniform $3\frac{3}{4}$" ± $\frac{1}{2}$" width, clean joint and install new preformed joint material with lubricant adhesive.

Routing at joints will be measured and paid for as "Class A Deck Repair" according to Section 2413 of the Standard Specifications.

Overlaying of the bridge approach pavement with PCC will be paid for at the contract unit price for "Deck Overlay" according to Section 2413 of the Standard Specifications. Scarification to the depth required is incidental to "Deck Overlay".

Sealed joints installed at locations of existing joints will not be paid for separately, but are incidental to "Deck Overlay".

For raising HMA shoulder to match the PCC overlay of the bridge approach pavement, Class II compaction is required as specified in Section 2303 of the Standard Specifications. Asphalt binder and tack coat are incidental.

Construct "Granular Shoulders, Type B" according to Section 2121 of the Standard Specifications when other than paved shoulders exist.

For joint details, refer to PV-101.

IOWA DOT

STANDARD ROAD PLAN

REVISION	
New	04-21-15

BR-111

SHEET 1 of 1

REVISIONS: New. Replaces RK-17.

Brian Smith
APPROVED BY DESIGN METHODS ENGINEER

PCC OVERLAY OF REINFORCED BRIDGE APPROACH SECTION

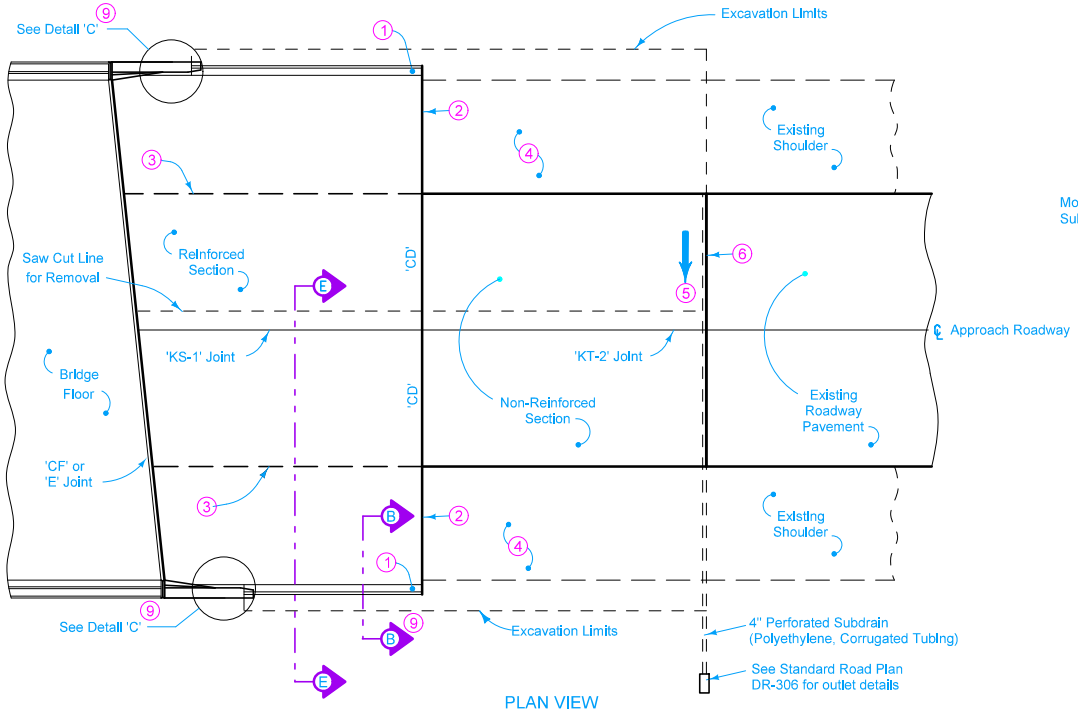

PLAN VIEW

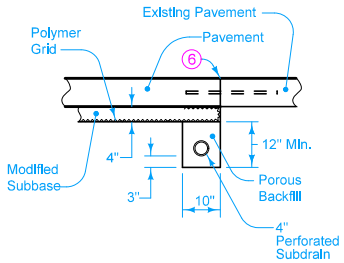

DETAIL 'B'

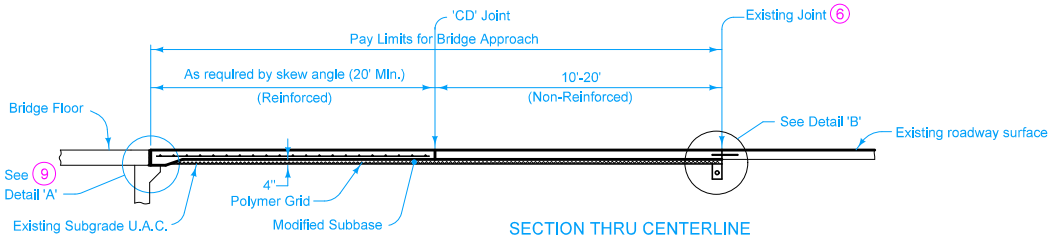

SECTION THRU CENTERLINE

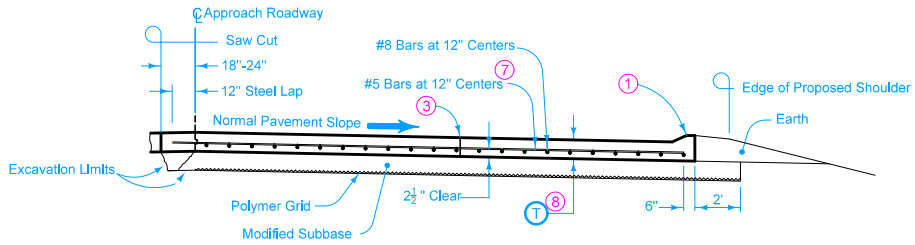

SECTION E-E

Maintain traffic in adjacent lanes.

For joint details, see PV-101.

If an existing 'CF' joint is located approximately 60 feet from the new 'B' or 'RT' joint, the joint is to be recut to a width of 4 inches and new form joint material installed. If no 'CF' exists, construct a new 'CF' joint approximately 60 feet from the new 'B' or 'RT' joint.

Modified Subbase under paved shoulder panels adjacent to the bridge approach is incidental to "Paved Shoulder, P.C. Concrete", unless measured and paid for elsewhere on the project plans.

1. Build curb to end of Reinfoced Bridge Approach Section. See Curb Location Details (Section B-B on BR-101).
2. Place 'RD' joint if P.C. Shoulder; 'B' joint otherwise.
3. Optional 'KS-1' joint.
4. See Typical Paving Cross-Sections.
5. Slope Subdrain to drain.
6. Place 'RT' joint if existing pavement is P.C., 'B' joint otherwise.
7. If bridge is skewed, place additional #5 bar parallel to skewed face.
8. T=10 inches.
9. See BR-101.

Possible Contract Items:
Bridge Approach, Two Lane
Paved Shoulder, P.C. Concrete

PossibleTabulation:
112-6

IOWA DOT

STANDARD ROAD PLAN

REVISION	
1	10-17-17

BR-112

SHEET 1 of 1

REVISIONS: Changed DR-304 to DR-306.

Brian Smith
APPROVED BY DESIGN METHODS ENGINEER

BRIDGE APPROACH DETAILS (IN CONJUNCTION WITH BRIDGE DECK OVERLAY)

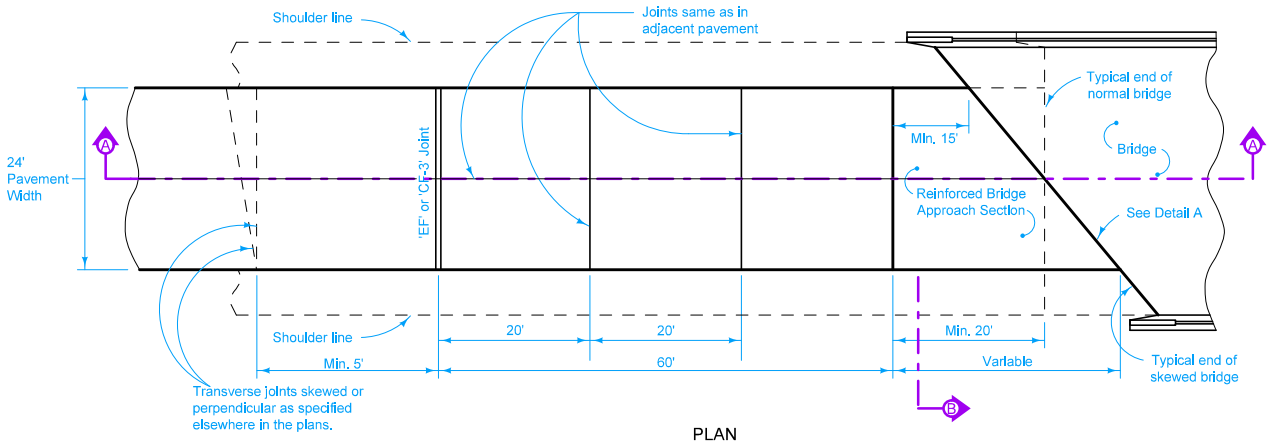

PLAN

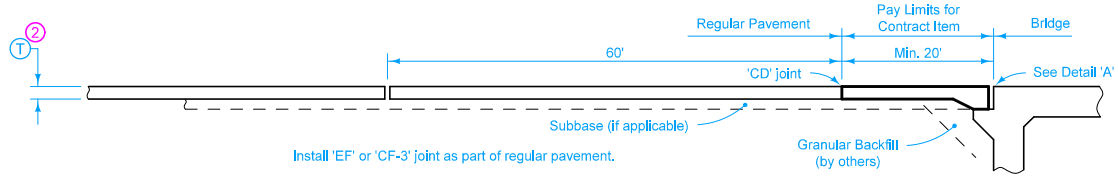

SECTION A-A

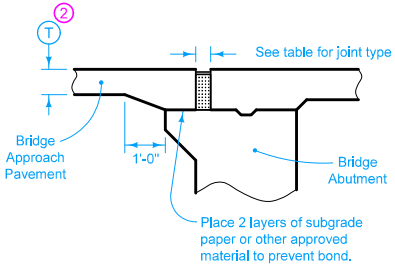

MOVABLE ABUTMENT BRIDGE

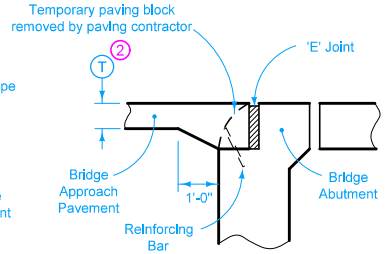

FIXED ABUTMENT BRIDGE

DETAIL 'A'

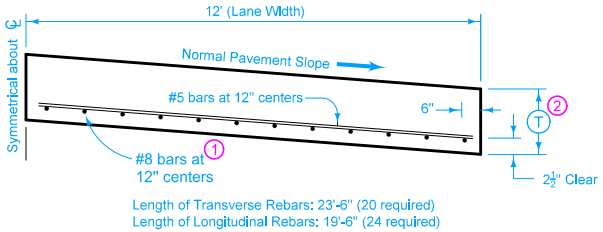

TYPICAL HALF SECTION B

Use the same concrete for the bridge approach section as is used for the remainder of the project pavement.

For joint details, see PV-101.

(1) If bridge is skewed, place additional #5 bar parallel to skewed face.

(2) T is the same thickness as is required for the remainder of the project pavement.

Quantity for 20 foot long approach section for 24 foot pavement is 53.33 square yards of "Bridge Approach."

JOINT TYPE FOR MOVABLE ABUTMENT BRIDGES		
Joint	Concrete Beam Maximum Bridge Length	Steel Girder Maximum Bridge Length
CF-1	370'	250'
CF-2	465'	320'
CF-3	575'	400'

Possible Contract Items:
Bridge Approach, Secondary Roads
Standard or Slip-Form PCC Pavement

Possible Tabulation:
112-6

IOWA DOT

STANDARD ROAD PLAN

REVISION: New 04-21-15

BR-121

SHEET 1 of 1

REVISIONS: New. Replaces RK-18.

Brian Smith
APPROVED BY DESIGN METHODS ENGINEER

BRIDGE APPROACH DETAILS (SECONDARY ROADS)

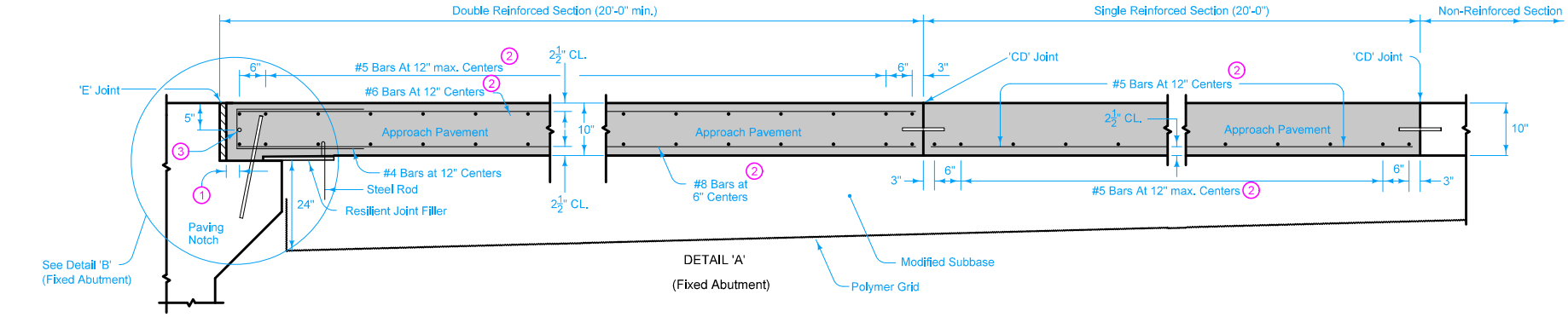

DETAIL 'A'

(Fixed Abutment)

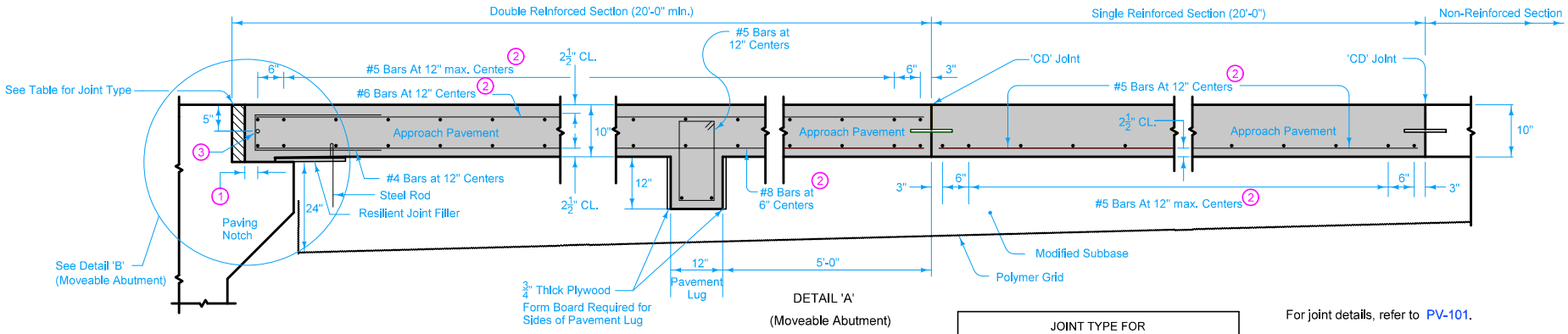

DETAIL 'A'

(Moveable Abutment)

JOINT TYPE FOR MOVEABLE ABUTMENT BRIDGES		
Joint	Maximum Bridge Length	
	Concrete Beam or Slab	Steel Girder
CF-1	370'	250'
CF-2	465'	320'
CF-3	575'	400'

For joint details, refer to PV-101.

For curb details, see Detail 'G'.

All transverse bars are #5.

Possible Contract Item:
Bridge Approach, BR-201

Possible Tabulation:
112-6

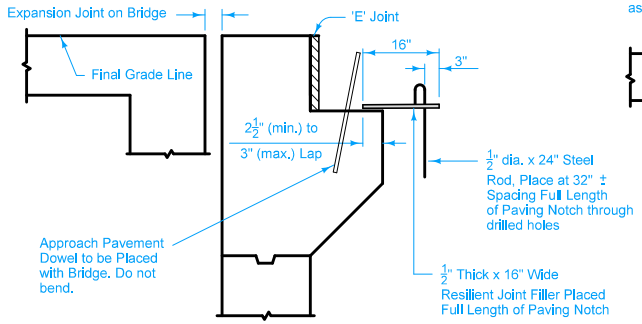

DETAIL 'B' (Fixed Abutment)

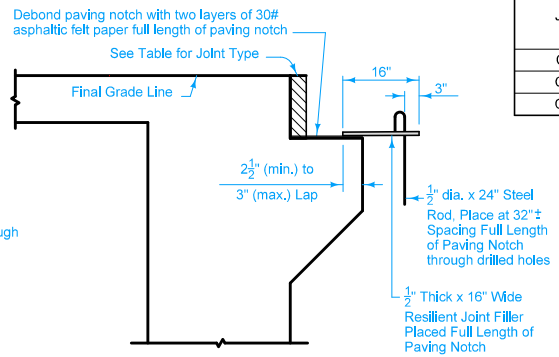

DETAIL 'B' (Moveable Abutment)

1. 2" min. to 2 1/2" max. clear to bent bar.
2. Minimum lap length: #5 Bars - 18"
   #6 Bars - 27"
   #8 Bars - 48"
3. If bridge is skewed, place additional #5 bar parallel to skewed face.

IOWA DOT

STANDARD ROAD PLAN

REVISION	
1	10-17-17

BR-201

SHEET 1 of 3

REVISIONS: Changed dimension from 4" to 5" and added 4" dimension to U Shaped Bent Bar Shapes on Page 3.

Brian Smith
APPROVED BY DESIGN METHODS ENGINEER

DOUBLE REINFORCED 10" APPROACH

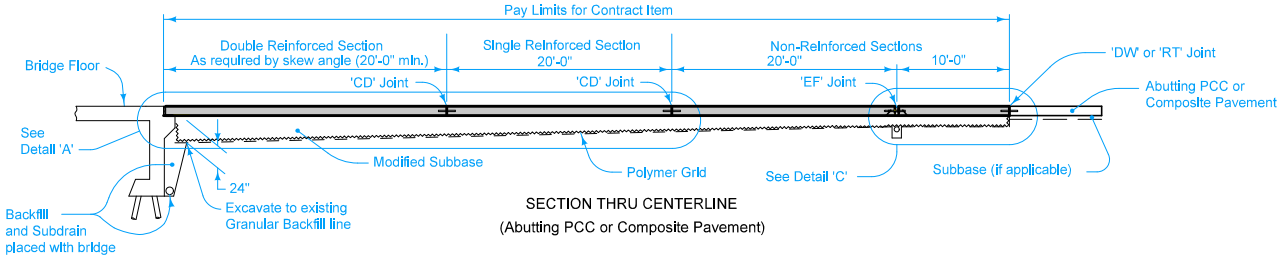

SECTION THRU CENTERLINE
(Abutting PCC or Composite Pavement)

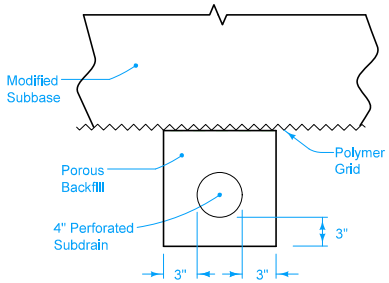

4" SUBDRAIN LOCATION

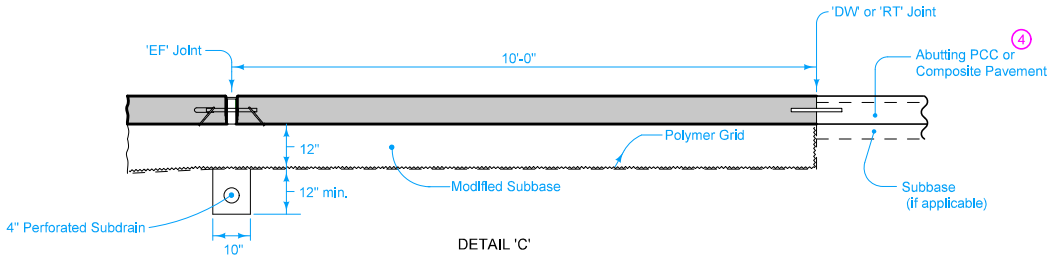

DETAIL 'C'
(Doweled PCC Pavement)

4 If abutting pavement (PCC or HMA) is not in place, refer to BR-213.

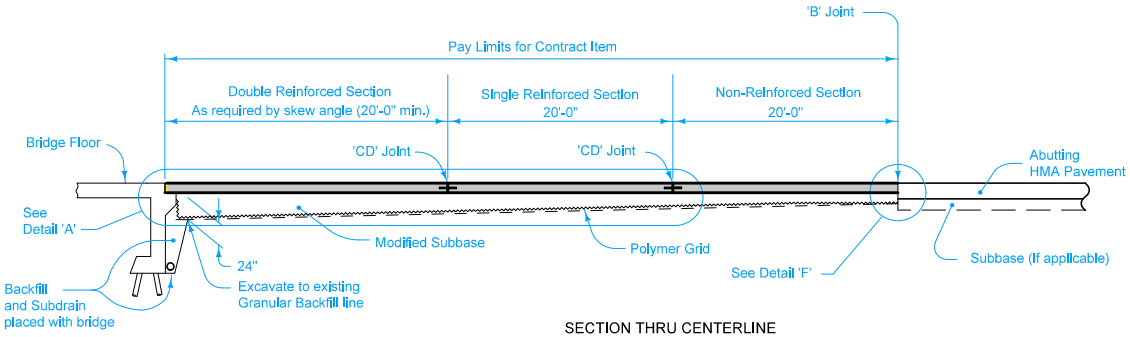

SECTION THRU CENTERLINE
(Abutting HMA Pavement)

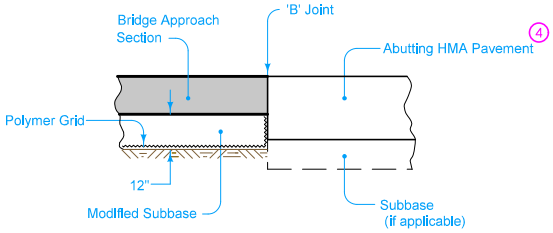

DETAIL 'F'

IOWA DOT

STANDARD ROAD PLAN

REVISION	
1	10-17-17

BR-201

SHEET 2 of 3

REVISIONS: Changed dimension from 4" to 5" and added 4" dimension to U Shaped Bent Bar Shapes on Page 3.

Brian Smith
APPROVED BY DESIGN METHODS ENGINEER

DOUBLE REINFORCED 10" APPROACH

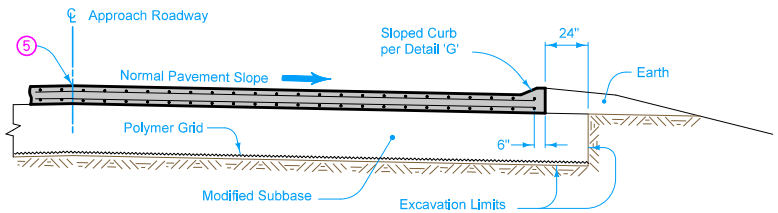

SECTION A-A 6

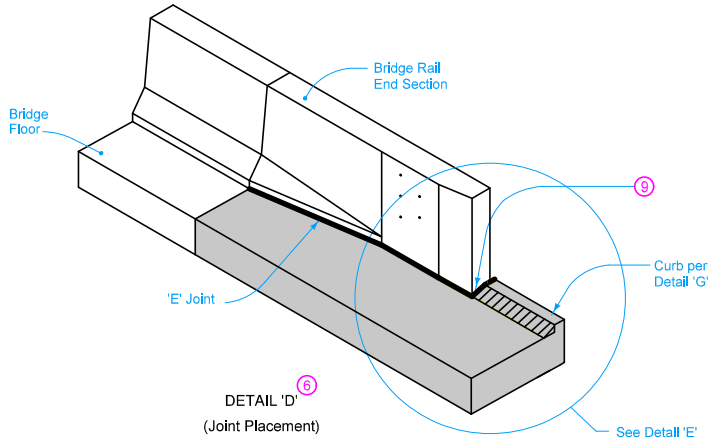

DETAIL 'D' 6

(Joint Placement)

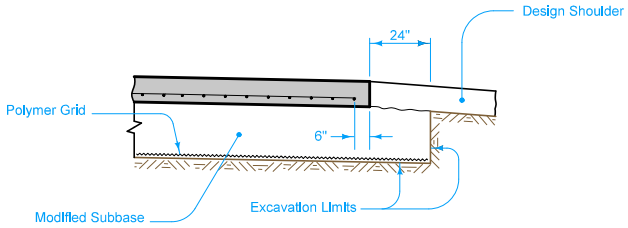

SECTION B-B 6

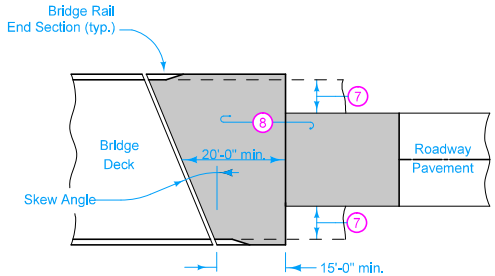

APPROACH PAVEMENT
LAYOUT AT A SKEW

5 Longitudinal Joint (PV-101):
Single pour - Saw cut joint per Detail B.
Two pours - Use 'KS-2' Joint.

6 Refer to BR-211, BR-212, or BR-231.

7 Design shoulder width.

8 Reinforced bridge approach section.

9 Expansion joint at end of Bridge Rail End Section: Place joint filler the full depth of the bridge approach pavement. In areas with curb, place full depth of pavement plus curb and shape material to fit the shape of the curb per Section B-B of PV-101. Seal joint per Detail F of PV-101.

- Fixed Abutment Bridges: Type 'E' Joint.
- Moveable Abutment Bridges: Flexible Foam Expansion Joint Filler complying with Section 4136 of the Standard Specifications. Minimum filler width is the abutment 'CF' joint width. Joint length as required to completely fill from back side of curb to front face of bridge wing.

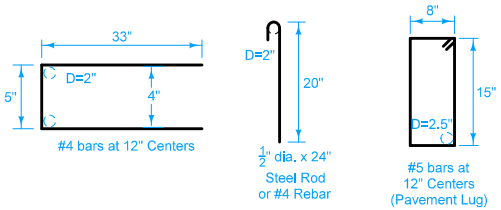

BENT BAR SHAPES

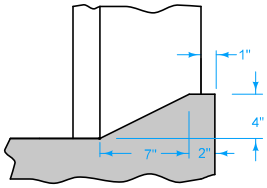

DETAIL 'G'

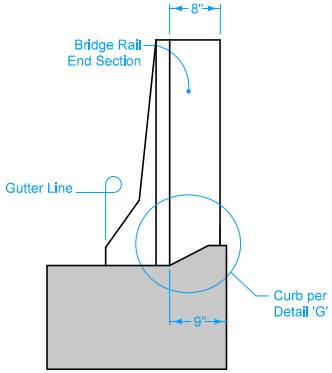

DETAIL 'E'

(Back of Curb Placement)

IOWA DOT

STANDARD ROAD PLAN

REVISION	
1	10-17-17

BR-201

SHEET 3 of 3

REVISIONS: Changed dimension from 4" to 5" and added 4" dimension to U Shaped Bent Bar Shapes on Page 3.

Brian Smith
APPROVED BY DESIGN METHODS ENGINEER

DOUBLE REINFORCED 10" APPROACH

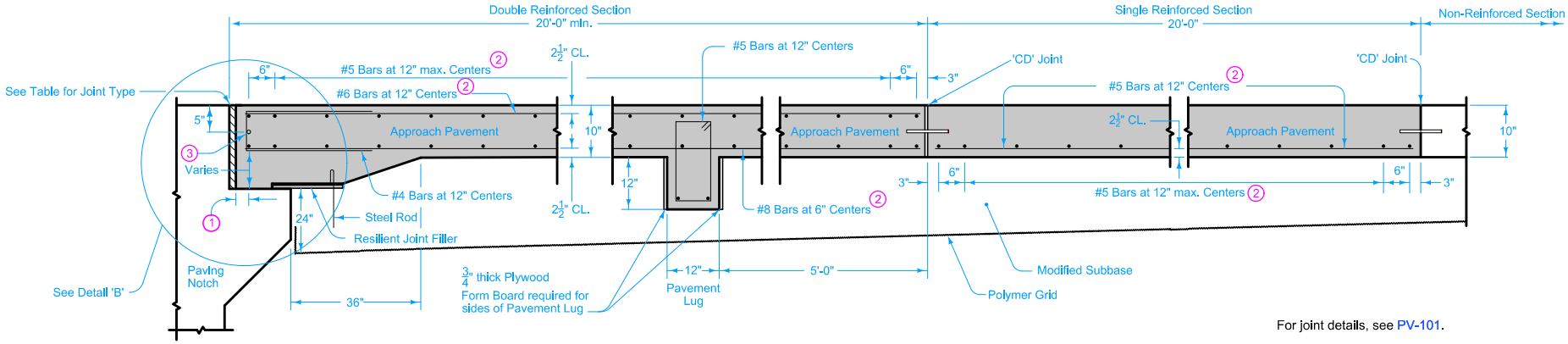

DETAIL 'A'

For joint details, see PV-101.

For curb details, see Detail 'G'.

All Transverse Bars are #5.

See BR-211 or BR-212 for shoulders.

1. 2" to 2½" clear to bent bar.
2. Minimum lap length: #5 bars - 18 inches
   #6 bars - 27 inches
   #8 bars - 48 inches
3. If bridge is skewed, place additional #5 bar parallel to skewed face.

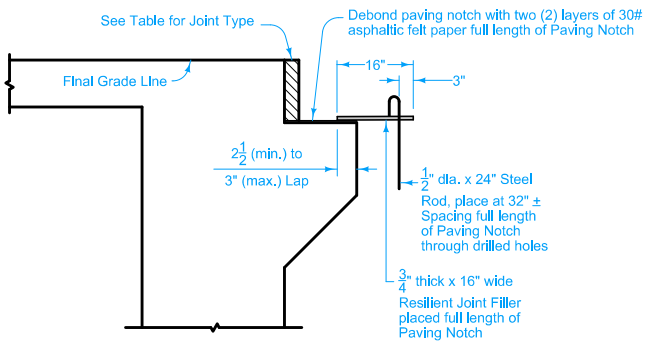

DETAIL 'B'

JOINT TYPE FOR MOVEABLE ABUTMENT BRIDGES		
Joint	Maximum Bridge Length	
	Concrete Beam or Slab	Steel Girder
CF-1	370'	250'
CF-2	465'	320'
CF-3	575'	400'

MOVEABLE ABUTMENT

Possible Contract Item:
Bridge Approach, BR-202

Possible Tabulation:
112-6

IOWA DOT

STANDARD ROAD PLAN

REVISION	
1	10-17-17

BR-202

SHEET 1 of 4

REVISIONS: Changed dimension from 4" to 5" and added 4" dimension to U shaped Bent Bar Shapes on Page 4.

Brian Smith
APPROVED BY DESIGN METHODS ENGINEER

DOUBLE REINFORCED 10" APPROACH WITH VARIABLE DEPTH PAVING NOTCH

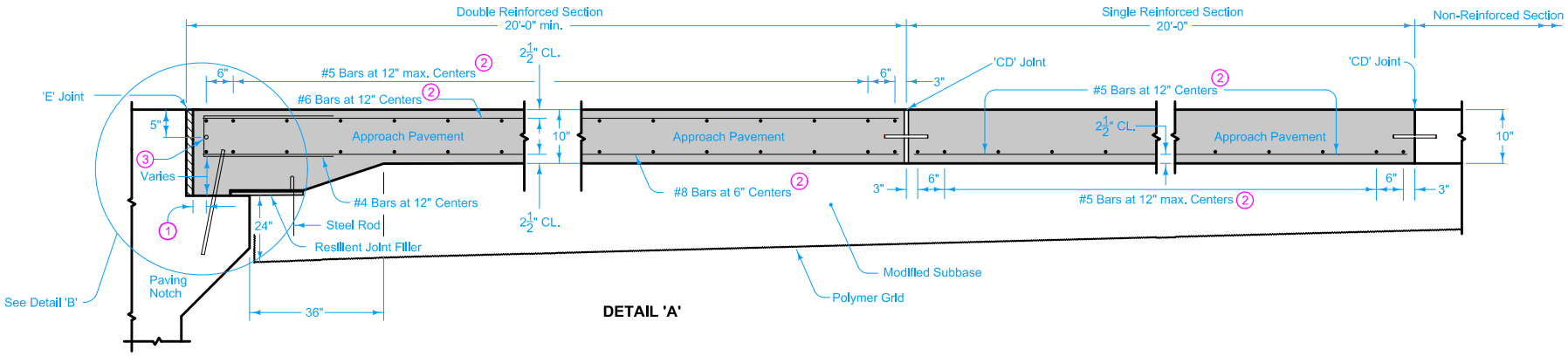

DETAIL 'A'

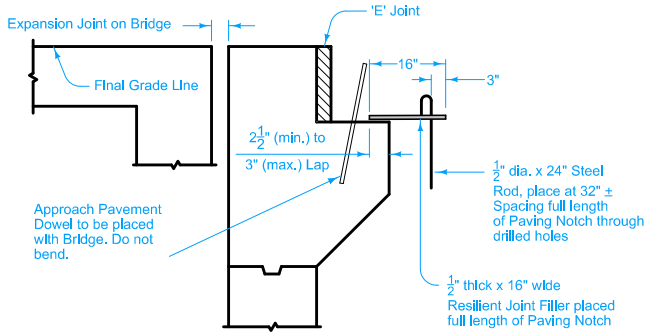

DETAIL 'B'

FIXED ABUTMENT

(1) 2" to 2½" clear to bent bar.

(2) Minimum lap length: #5 bars - 18 inches
#6 bars - 27 inches
#8 bars - 48 inches

(3) If bridge is skewed, place additional #5 bar parallel to skewed face.

IOWA DOT

STANDARD ROAD PLAN

REVISION	
1	10-17-17

BR-202

SHEET 2 of 4

REVISIONS: Changed dimension from 4" to 5" and added 4" dimension to U shaped Bent Bar Shapes on Page 4.

Brian Smith
APPROVED BY DESIGN METHODS ENGINEER

DOUBLE REINFORCED 10" APPROACH WITH VARIABLE DEPTH PAVING NOTCH

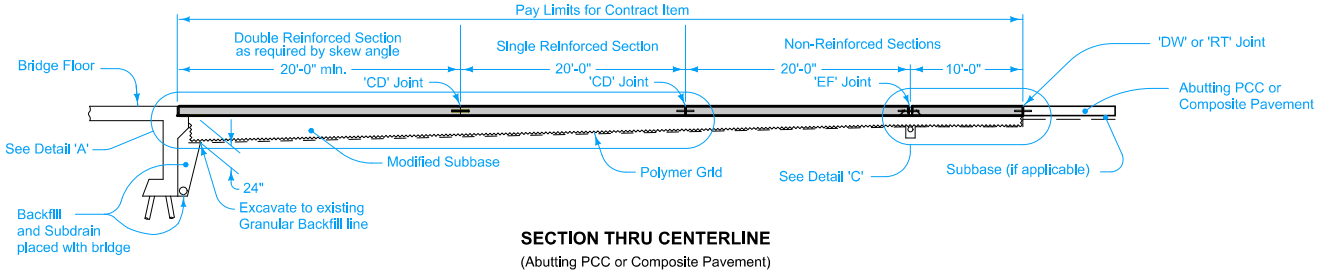

SECTION THRU CENTERLINE

(Abutting PCC or Composite Pavement)

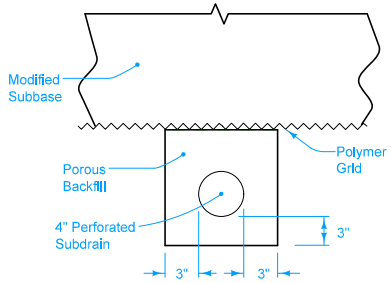

4" SUBDRAIN LOCATION

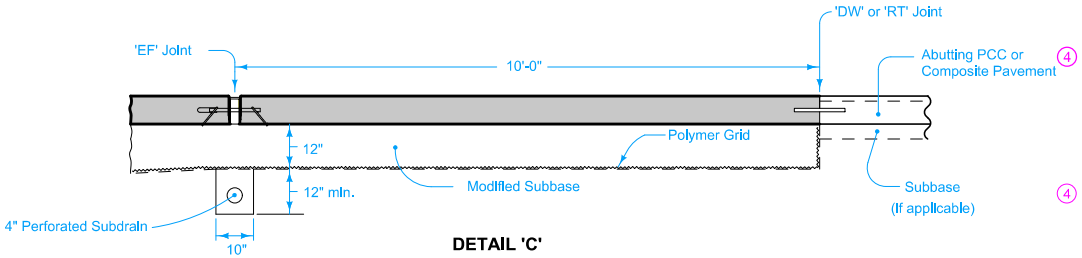

DETAIL 'C'

(Doweled PCC Pavement)

4 If abutting pavement (PCC or HMA) is not in place, refer to BR-213.

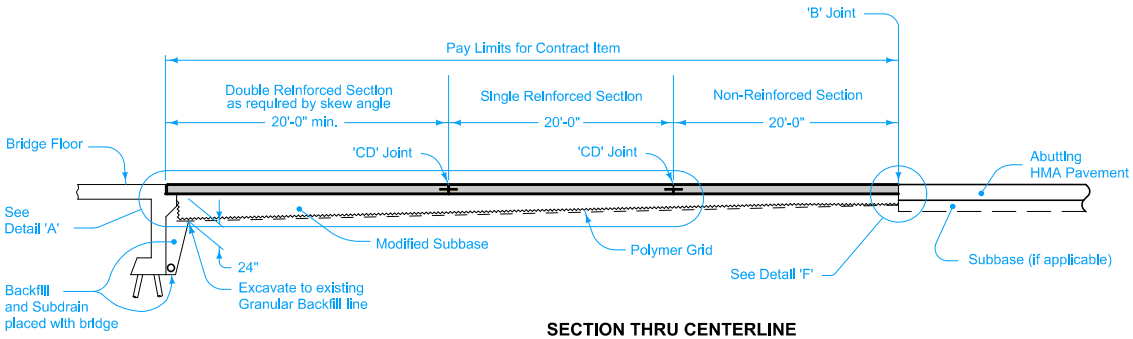

SECTION THRU CENTERLINE

(Abutting HMA Pavement)

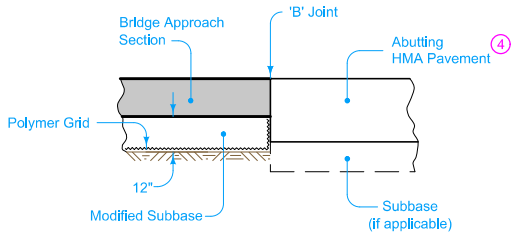

DETAIL 'F'

IOWA DOT

STANDARD ROAD PLAN

REVISION	
1	10-17-17

BR-202

SHEET 3 of 4

REVISIONS: Changed dimension from 4" to 5" and added 4" dimension to U shaped Bent Bar Shapes on Page 4.

Brian Smith

APPROVED BY DESIGN METHODS ENGINEER

DOUBLE REINFORCED 10" APPROACH WITH VARIABLE DEPTH PAVING NOTCH

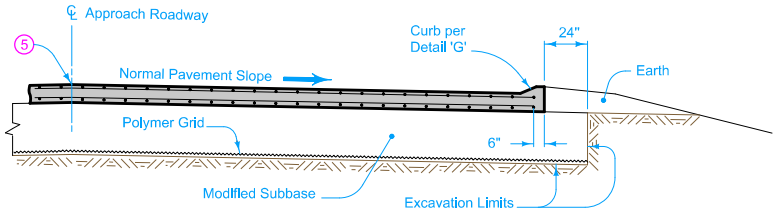

SECTION A-A 6

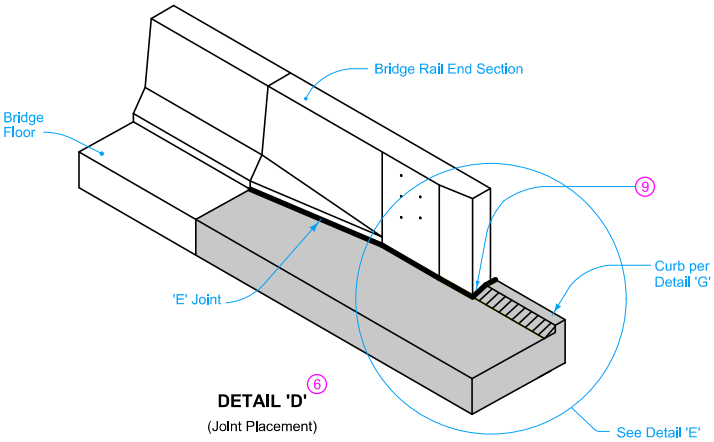

DETAIL 'D' 6
(Joint Placement)

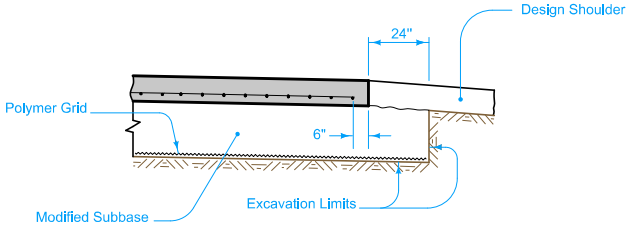

SECTION B-B 6

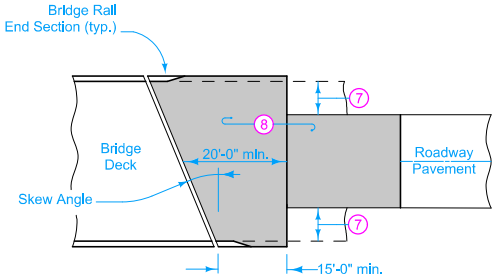

APPROACH PAVEMENT LAYOUT AT A SKEW

5 Longitudinal Joint (PV-101):
Single pour - Saw cut joint per Detail B.
Two pours - Use 'KS-2' Joint.

6 Refer to BR-211, BR-212, or BR-231.

7 Design shoulder width.

8 Reinforced bridge approach section.

9 Expansion joint at end of Bridge Rail End Section: Place joint filler the full depth of the bridge approach pavement. In areas with curb, place full depth of pavement plus curb and shape material to fit the shape of the curb per Section B-B of PV-101. Seal joint per Detail F of PV-101.

- Fixed Abutment Bridges: Type 'E' Joint.
- Moveable Abutment Bridges: Flexible Foam Expansion Joint Filler complying with Section 4136 of the Standard Specifications. Minimum filler width is the abutment 'CF' joint width. Joint length as required to completely fill from back side of curb to front face of bridge wing.

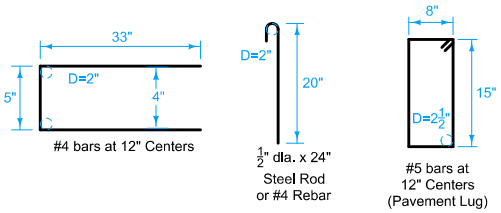

BENT BAR SHAPES

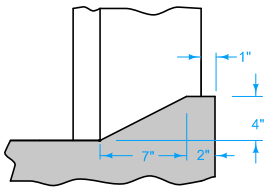

DETAIL 'G'

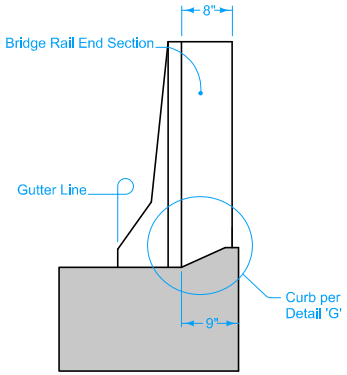

DETAIL 'E'
(Back of Curb Placement)

IOWA DOT

STANDARD ROAD PLAN

REVISION	
1	10-17-17

BR-202

SHEET 4 of 4

REVISIONS: Changed dimension from 4" to 5" and added 4" dimension to U shaped Bent Bar Shapes on Page 4.

Brian Smith
APPROVED BY DESIGN METHODS ENGINEER

DOUBLE REINFORCED 10" APPROACH WITH VARIABLE DEPTH PAVING NOTCH

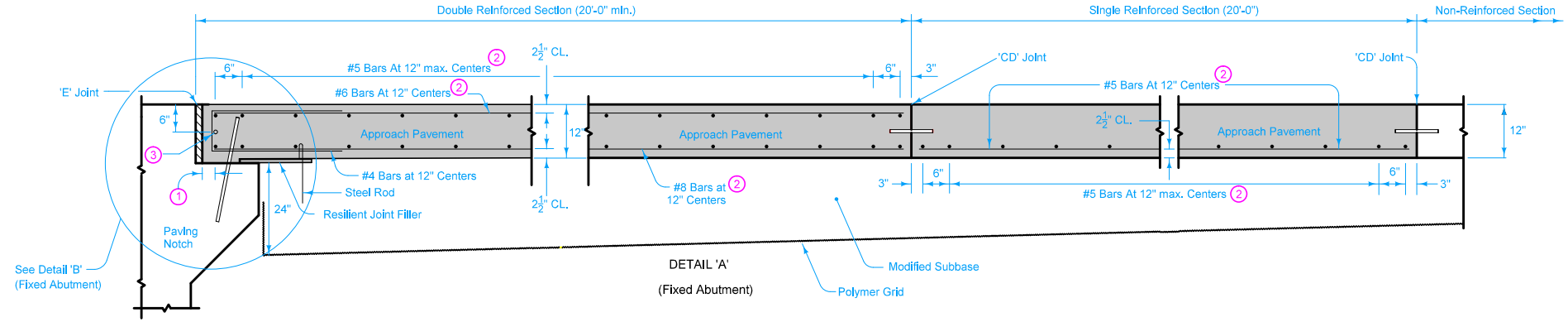

DETAIL 'A'

(Fixed Abutment)

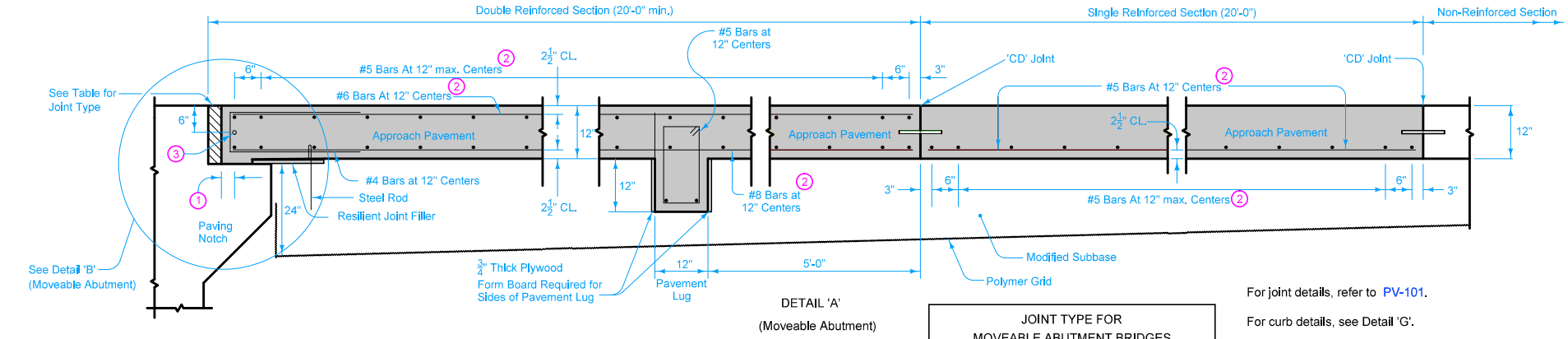

DETAIL 'A'

(Moveable Abutment)

JOINT TYPE FOR MOVEABLE ABUTMENT BRIDGES		
	Maximum Bridge Length	
Joint	Concrete Beam or Slab	Steel Girder
CF-1	370'	250'
CF-2	465'	320'
CF-3	575'	400'

For joint details, refer to PV-101.

For curb details, see Detail 'G'.

All transverse bars are #5.

Possible Contract Item:
Bridge Approach, BR-203

Possible Tabulation:
112-6

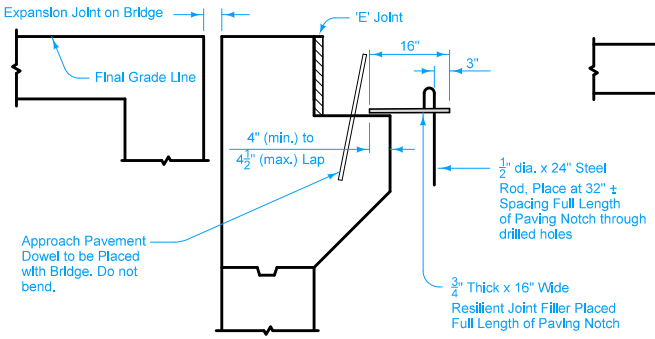

DETAIL 'B' (Fixed Abutment)

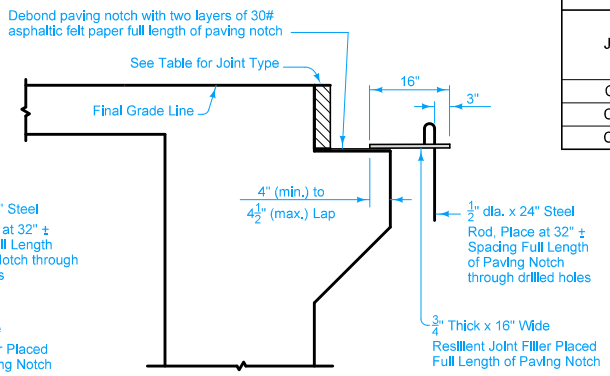

DETAIL 'B' (Moveable Abutment)

(1) 2" min. to 2 1/2" max. clear to bent bar.

(2) Minimum lap length: #5 Bars - 18"
#6 Bars - 27"
#8 Bars - 48"

(3) If bridge is skewed, place additional #5 bar parallel to skewed face.

IOWA DOT

STANDARD ROAD PLAN

REVISION	
1	10-17-17

BR-203

SHEET 1 of 3

REVISIONS: Changed dimension from 6" to 7" and added 6" dimension to U shaped Bent Bar Shapes on Page 3.

Brian Smith
APPROVED BY DESIGN METHODS ENGINEER

DOUBLE REINFORCED 12" APPROACH

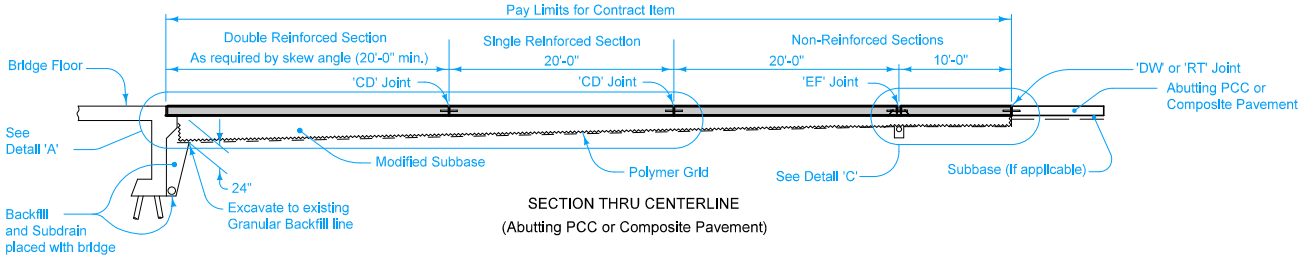

SECTION THRU CENTERLINE
(Abutting PCC or Composite Pavement)

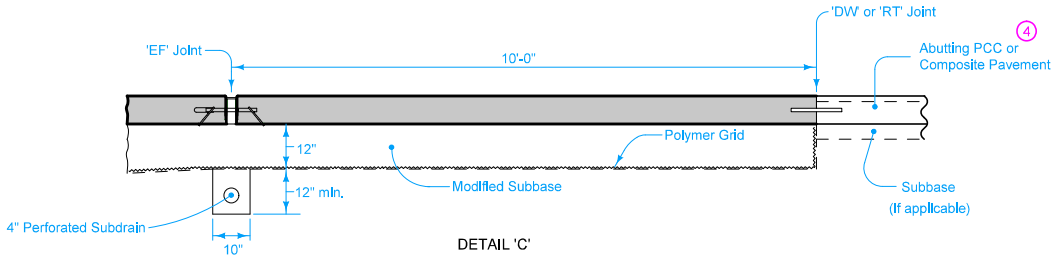

DETAIL 'C'
(Doweled PCC Pavement)

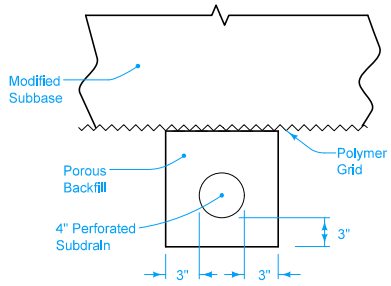

4" SUBDRAIN LOCATION

4 If abutting pavement (PCC or HMA) is not in place, refer to BR-213.

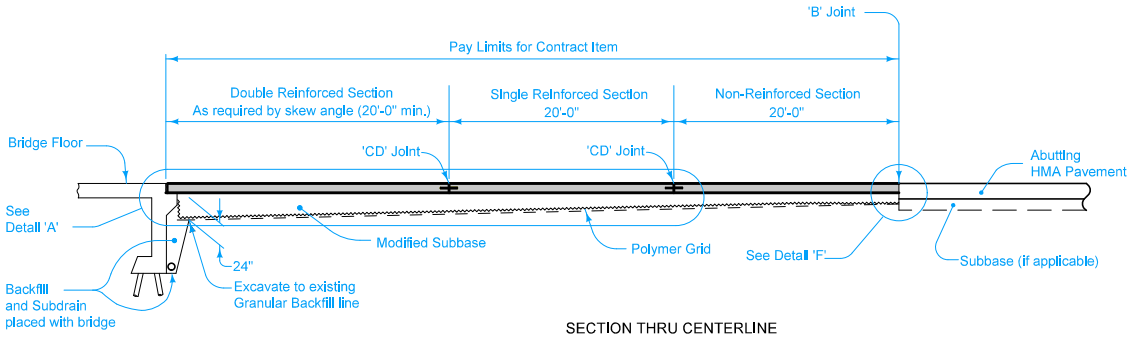

SECTION THRU CENTERLINE
(Abutting HMA Pavement)

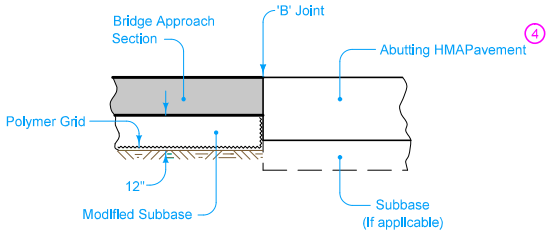

DETAIL 'F'

IOWA DOT

STANDARD ROAD PLAN

REVISION	
1	10-17-17

BR-203

SHEET 2 of 3

REVISIONS: Changed dimension from 6" to 7" and added 6" dimension to U shaped Bent Bar Shapes on Page 3.

Brian Smith
APPROVED BY DESIGN METHODS ENGINEER

DOUBLE REINFORCED 12" APPROACH

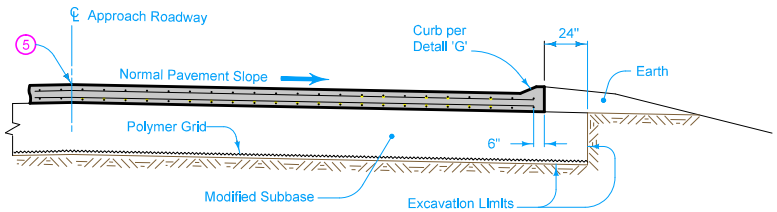

SECTION A-A 6

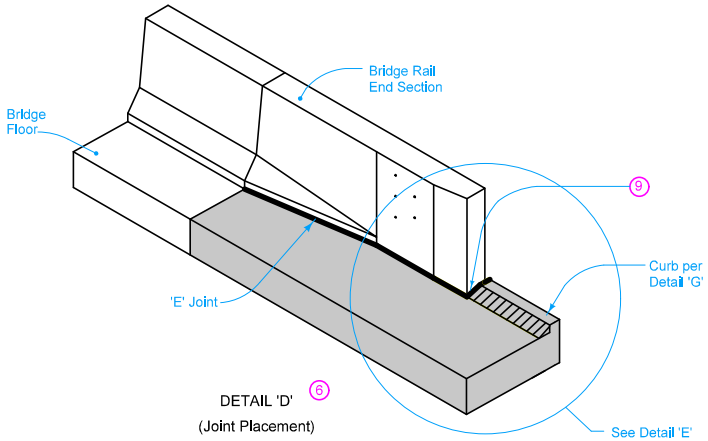

DETAIL 'D' 6

(Joint Placement)

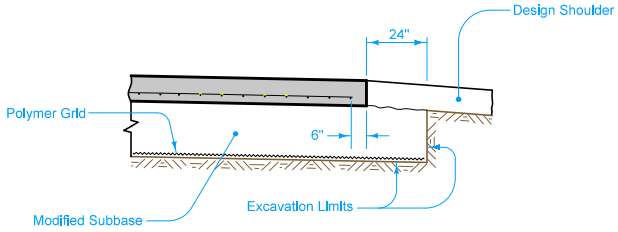

SECTION B-B 6

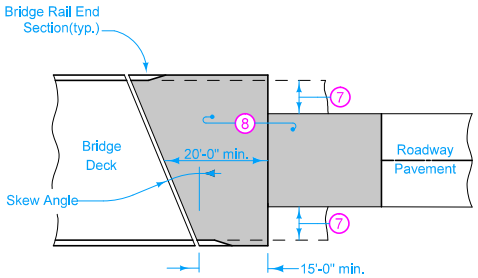

APPROACH PAVEMENT

LAYOUT AT A SKEW

5 Longitudinal Joint (PV-101):
Single pour - Saw cut joint per Detail B.
Two pours - Use 'KS-2' joint.

6 Refer to BR-211, BR-212, or BR-231.

7 Design shoulder width.

8 Reinforced bridge approach section.

9 Expansion joint at end of Bridge Rail End Section: Place joint filler the full depth of the bridge approach pavement. In areas with curb, place full depth of pavement plus curb and shape material to fit the shape of the curb per Section B-B of PV-101. Seal joint per Detail F of PV-101.

- Fixed Abutment Bridges: Type 'E' joint.
- Moveable Abutment Bridges: Flexible Foam Expansion Joint Filler complying with Section 4136 of the Standard Specifications. Minimum filler width is the abutment 'CF' joint width. Joint length as required to completely fill from back side of curb to front face of bridge wing.

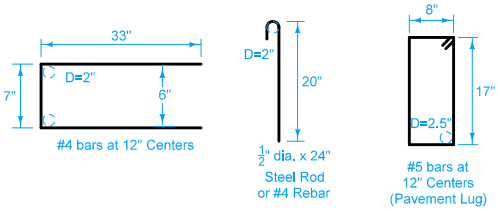

BENT BAR SHAPES

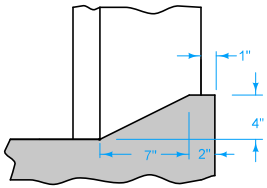

DETAIL 'G'

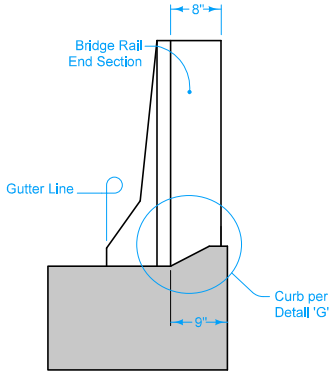

DETAIL 'E'

(Back of Curb Placement)

IOWA DOT

STANDARD ROAD PLAN

REVISION	
1	10-17-17

BR-203

SHEET 3 of 3

REVISIONS: Changed dimension from 6" to 7" and added 6" dimension to U shaped Bent Bar Shapes on Page 3.

Brian Smith

APPROVED BY DESIGN METHODS ENGINEER

DOUBLE REINFORCED 12" APPROACH

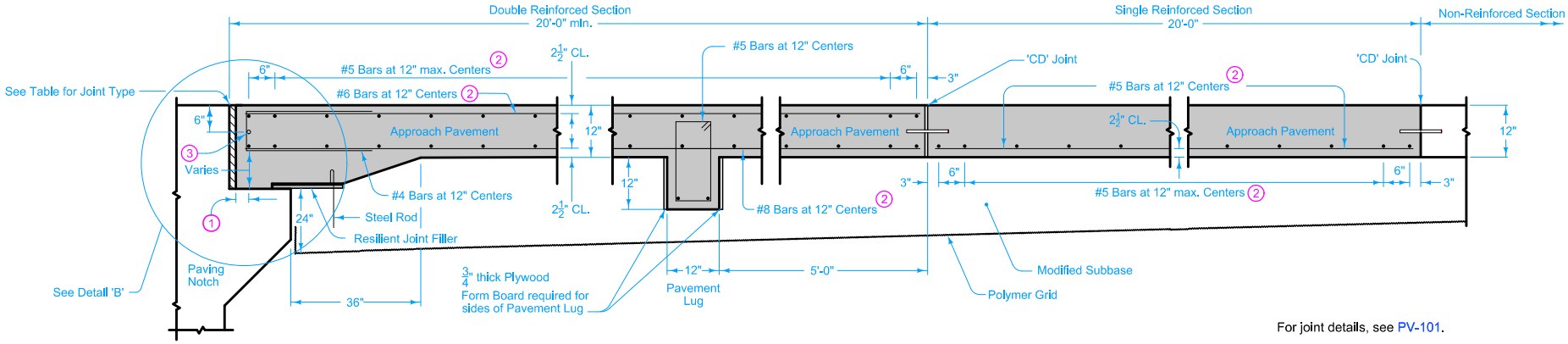

DETAIL 'A'

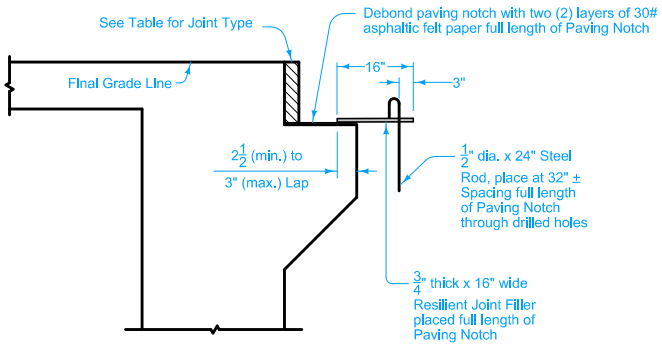

DETAIL 'B'

JOINT TYPE FOR MOVEABLE ABUTMENT BRIDGES		
Joint	Maximum Bridge Length	
	Concrete Beam or Slab	Steel Girder
CF-1	370'	250'
CF-2	465'	320'
CF-3	575'	400'

For joint details, see PV-101.

For curb details, see Detail 'G'.

All Transverse Bars are #5.

See BR-211 or BR-212 for shoulders.

1 2" to 2½" clear to bent bar.

2 Minimum lap length: #5 bars - 18 inches
#6 bars - 27 inches
#8 bars - 48 inches

3 If bridge is skewed, place additional #5 bar parallel to skewed face.

Possible Contract Item:
Bridge Approach, BR-204

Possible Tabulation:
112-6

MOVEABLE ABUTMENT

IOWA DOT

STANDARD ROAD PLAN

REVISION	
1	10-17-17

BR-204

SHEET 1 of 4

REVISIONS: Changed dimension from 6" to 7" and added 6" dimension to U shaped Bent Bar Shapes on Page 4.

Brian Smith
APPROVED BY DESIGN METHODS ENGINEER

DOUBLE REINFORCED 12" APPROACH WITH VARIABLE DEPTH PAVING NOTCH

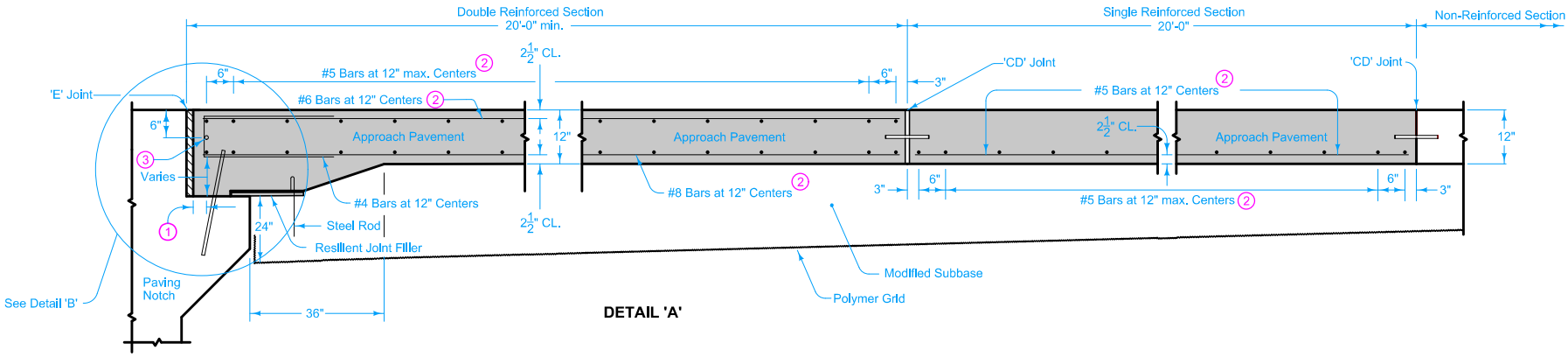

DETAIL 'A'

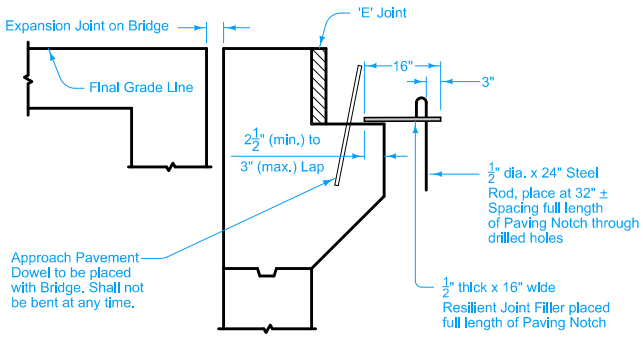

DETAIL 'B'

FIXED ABUTMENT

(1) 2" to 2½" clear to bent bar.

(2) Minimum lap length: #5 bars - 18 inches
#6 bars - 27 inches
#8 bars - 48 inches

(3) If bridge is skewed, place additional #5 bar parallel to skewed face.

IOWA DOT

STANDARD ROAD PLAN

REVISION	
1	10-17-17

BR-204

SHEET 2 of 4

REVISIONS: Changed dimension from 6" to 7" and added 6" dimension to U shaped Bent Bar Shapes on Page 4.

Brian Smith
APPROVED BY DESIGN METHODS ENGINEER

DOUBLE REINFORCED 12" APPROACH WITH VARIABLE DEPTH PAVING NOTCH

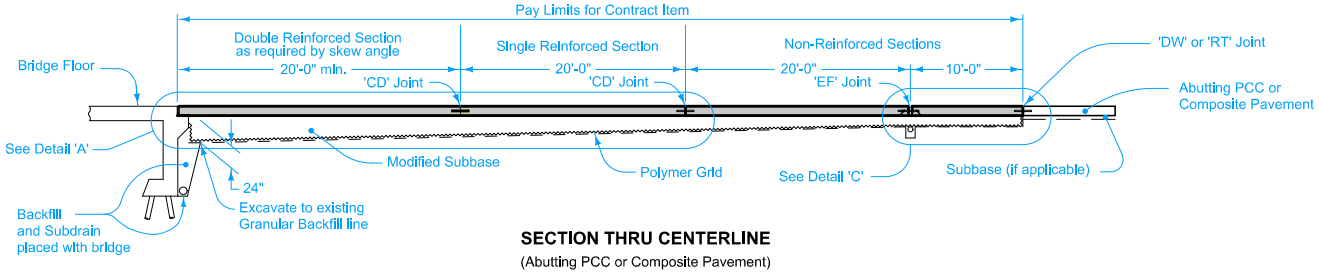

SECTION THRU CENTERLINE

(Abutting PCC or Composite Pavement)

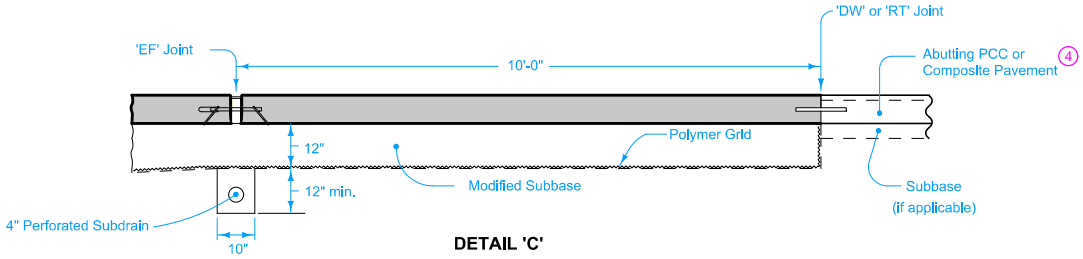

DETAIL 'C'

(Doweled PCC Pavement)

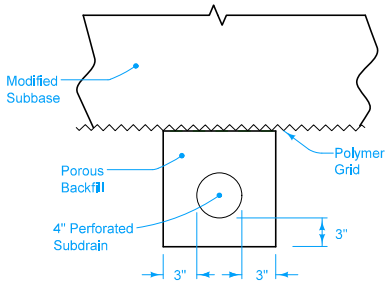

4" SUBDRAIN LOCATION

4 If abutting pavement (PCC or HMA) is not in place, refer to BR-213.

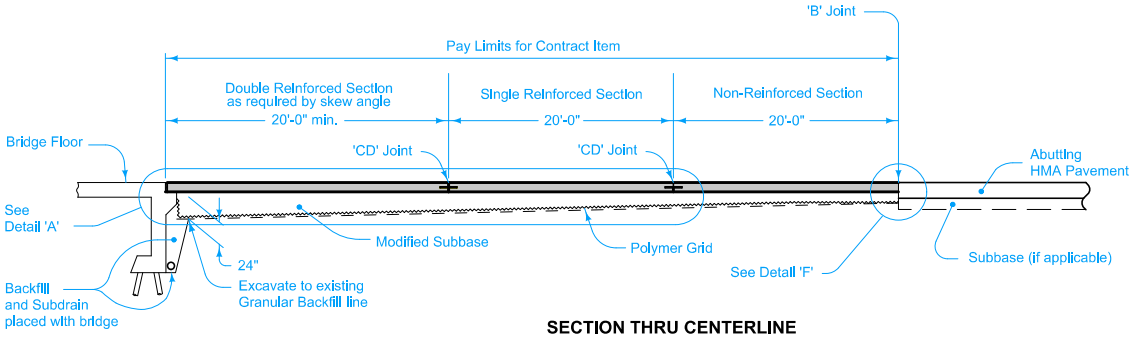

SECTION THRU CENTERLINE

(Abutting HMA Pavement)

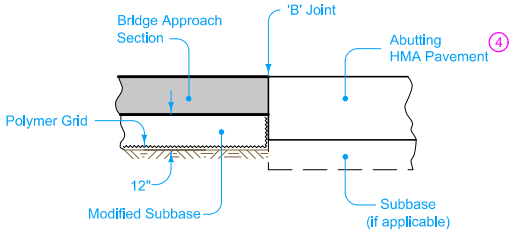

DETAIL 'F'

IOWA DOT

STANDARD ROAD PLAN

REVISION	
1	10-17-17

BR-204

SHEET 3 of 4

REVISIONS: Changed dimension from 6" to 7" and added 6" dimension to U shaped Bent Bar Shapes on Page 4.

Brian Smith

APPROVED BY DESIGN METHODS ENGINEER

DOUBLE REINFORCED 12" APPROACH WITH VARIABLE DEPTH PAVING NOTCH

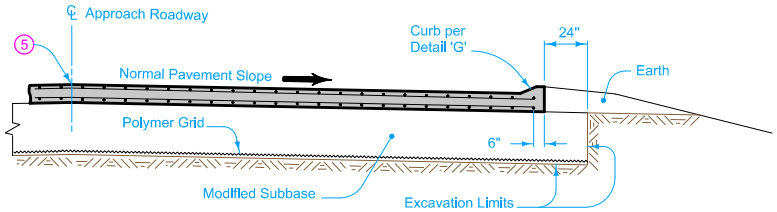

SECTION A-A 6

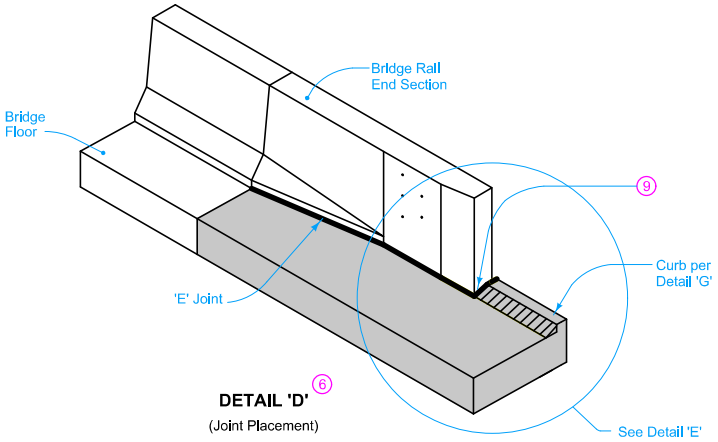

DETAIL 'D' 6

(Joint Placement)

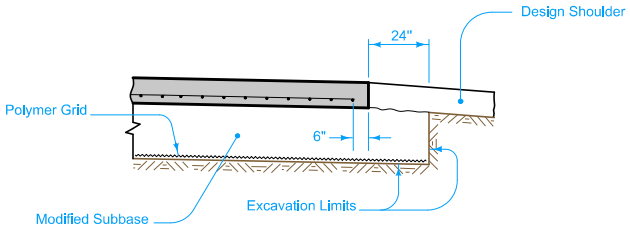

SECTION B-B 6

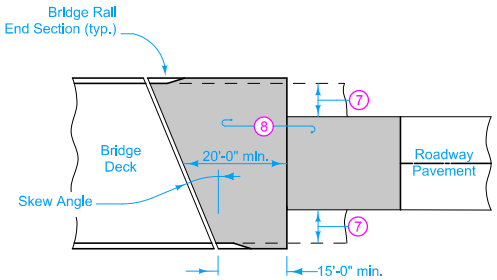

APPROACH PAVEMENT LAYOUT AT A SKEW

5 Longitudinal Joint (PV-101):
Single pour - Saw cut joint per Detail B.
Two pours - Use 'KS-2' Joint.

6 Refer to BR-211, BR-212, or BR-231.

7 Design shoulder width.

8 Reinforced bridge approach section.

9 Expansion joint at end of Bridge Rail End Section: Place joint filler the full depth of the bridge approach pavement. In areas with curb, place full depth of pavement plus curb and shape material to fit the shape of the curb per Section B-B of PV-101. Seal joint per Detail F of PV-101.

- Fixed Abutment Bridges: Type 'E' Joint.
- Moveable Abutment Bridges: Flexible Foam Expansion Joint Filler complying with Section 4136 of the Standard Specifications. Minimum filler width is the abutment 'CF' joint width. Joint length as required to completely fill from back side of curb to front face of bridge wing.

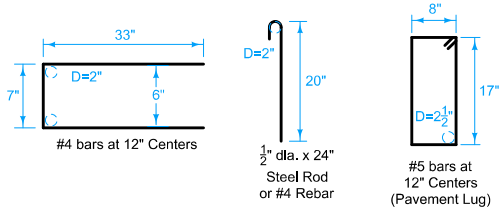

BENT BAR SHAPES

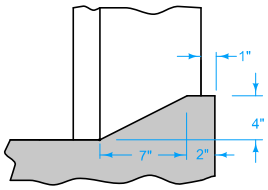

DETAIL 'G'

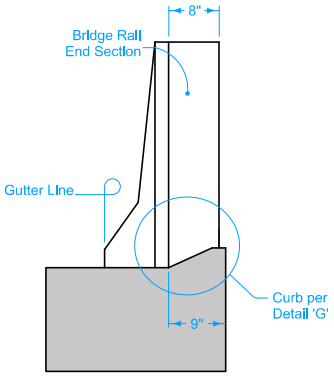

DETAIL 'E'

(Back of Curb Placement)

IOWA DOT

STANDARD ROAD PLAN

REVISION	
1	10-17-17

BR-204

SHEET 4 of 4

REVISIONS: Changed dimension from 6" to 7" and added 6" dimension to U shaped Bent Bar Shapes on Page 4.

Brian Smith

APPROVED BY DESIGN METHODS ENGINEER

DOUBLE REINFORCED 12" APPROACH WITH VARIABLE DEPTH PAVING NOTCH

DESIGNER INFO

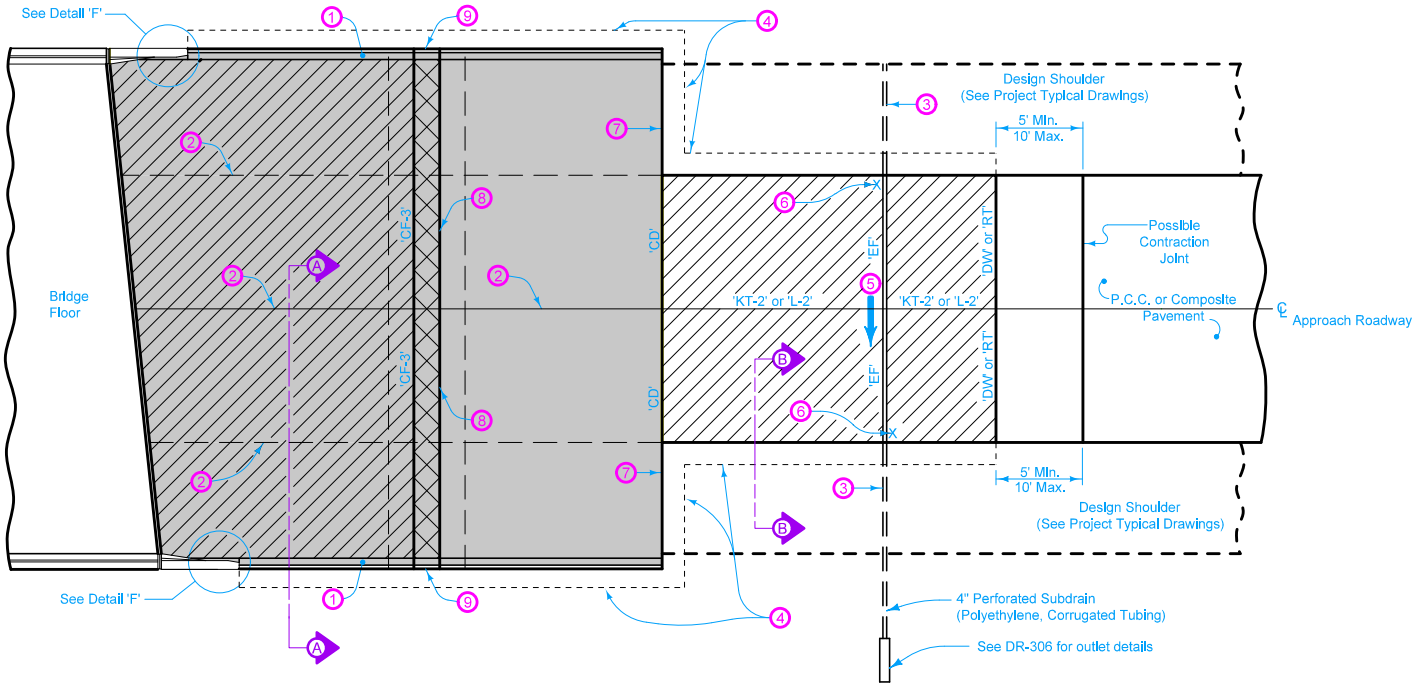

PLAN VIEW

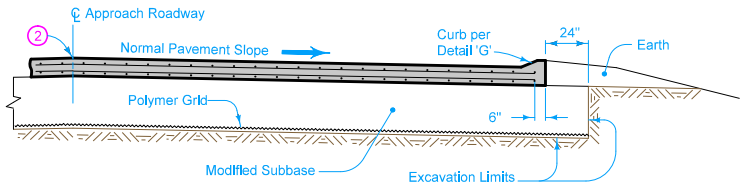

SECTION A-A

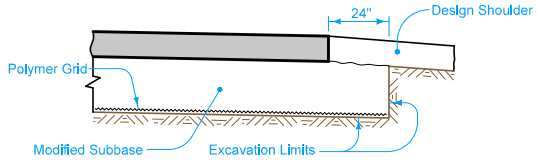

SECTION B-B

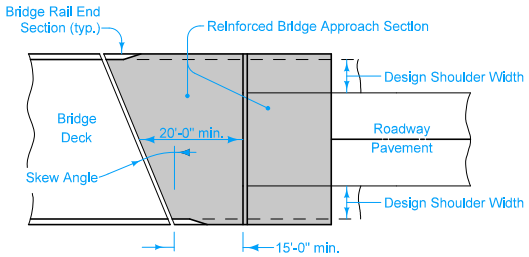

APPROACH PAVEMENT LAYOUT AT A SKEW

Pay limits for contract item include the following areas:

- Double Reinforced Section
- Sleeper Beam Section
- Single Reinforced Section
- Non-Reinforced Section

For joint details, see PV-101.

For curb details, see Detail 'G'.

All transverse bars are #5.

Use epoxy coated bars for all reinforcement.

Quantities for both the 1'-9" top part of the sleeper slab and the 6'-3" portion under the approach pavement have been included in the double reinforced section quantities.

1. Build 4 inch Sloped Curb to end of Reinforced Sections.
2. Longitudinal Joint (PV-101):
   Single Pour - Saw cut joint per Detail B .
   Two Pours - Use 'KS-1' joint (Single Reinforced Section).
   Use 'KS-2' joint (Double Reinforced Section).
3. Extend 'CD' and 'EF' joints where PCC Shoulder.
4. Polymer Grid and excavation limits of Modified Subbase 2 feet outside of pavement edge.
5. Slope subdrain to drain.
6. Place an "X" in the plastic concrete near the 'EF' joint at the outside edge of pavement.
7. Place 'RD' Joint where PCC shoulder. Place 'B' joint otherwise.
8. $\frac{1}{4}$ inch Preformed Joint Filler and seal top.
9. See Detail 'C'.

Possible Contract Item:
Bridge Approach, BR-205

Possible Tabulation:
112-6

IOWA DOT

STANDARD ROAD PLAN

REVISION	
5	10-15-19

BR-205

SHEET 1 of 4

REVISIONS: Modified leader line for circle note 4 in PLAN VIEW on Sheet 1.

APPROVED BY DESIGN METHODS ENGINEER

DOUBLE REINFORCED 12" APPROACH (SLAB BRIDGE)

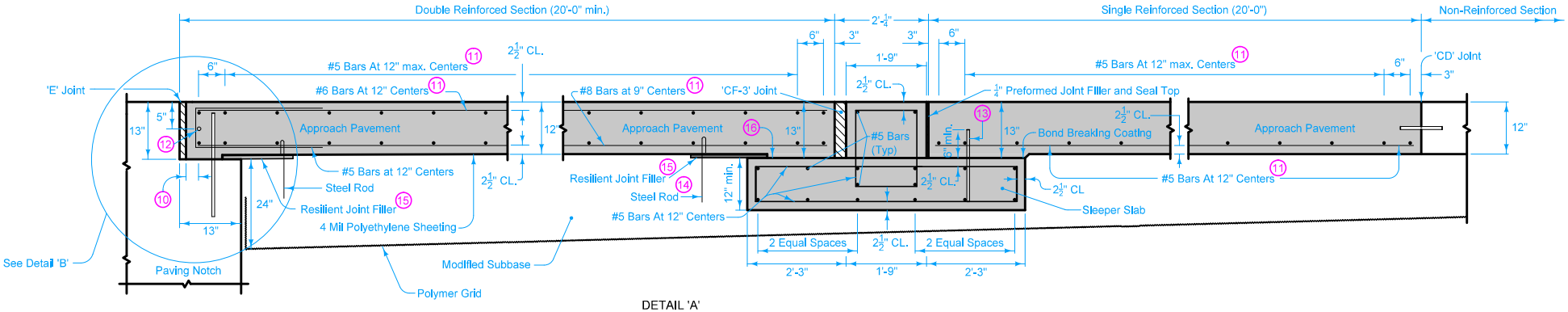

DETAIL 'A'
(Slab Bridge)

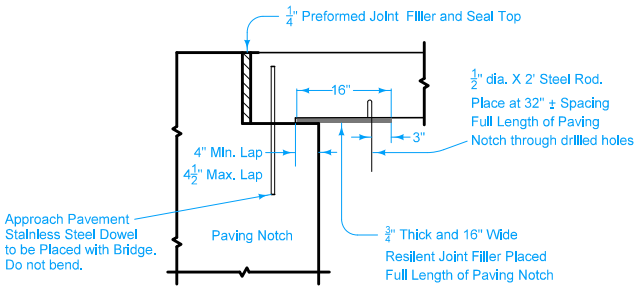

DETAIL 'B'

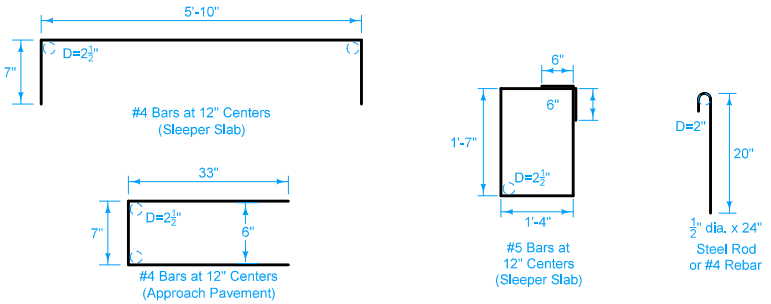

BENT BAR SHAPES

10. 2" min. to 2 1/2" max. clear to bent bar.
11. Minimum lap length: #5 Bars - 18"
    #6 Bars - 27"
    #8 Bars - 48"
12. If bridge is skewed, place additional #5 bar parallel to skewed face.
13. #8 dowels 1'-6" long with 2½ inch bottom end clearance. Space at 24 inches O.C.
14. Space at 32" ± for full length of Sleeper Slab.
15. ¾ inch thick x 16 inch wide Resilient Joint Filler for full length of Sleeper Slab.
16. Debond Paving Notch with 2 layers of 30# Asphaltic Felt Paper full length.

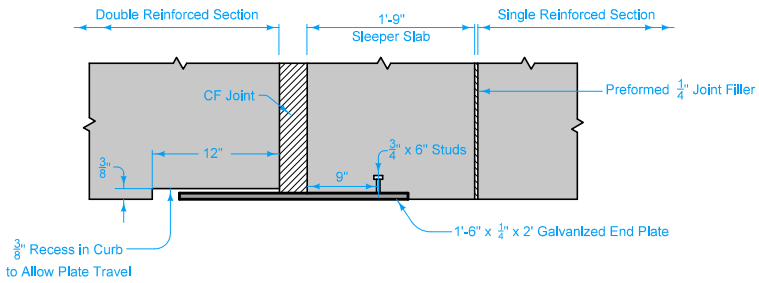

PARTIAL PLAN VIEW
(Slab Edge Details for CF Joint with Curb)

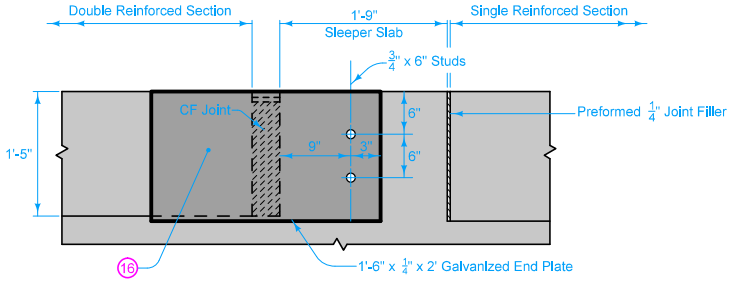

END VIEW
(Slab Edge Details for CF Joint with Curb)

DETAIL 'C'

IOWA DOT

STANDARD ROAD PLAN

REVISION	
5	10-15-19

BR-205

SHEET 2 of 4

REVISIONS: Modified leader line for circle note 4 in PLAN VIEW on Sheet 1.

APPROVED BY DESIGN METHODS ENGINEER

DOUBLE REINFORCED 12" APPROACH (SLAB BRIDGE)

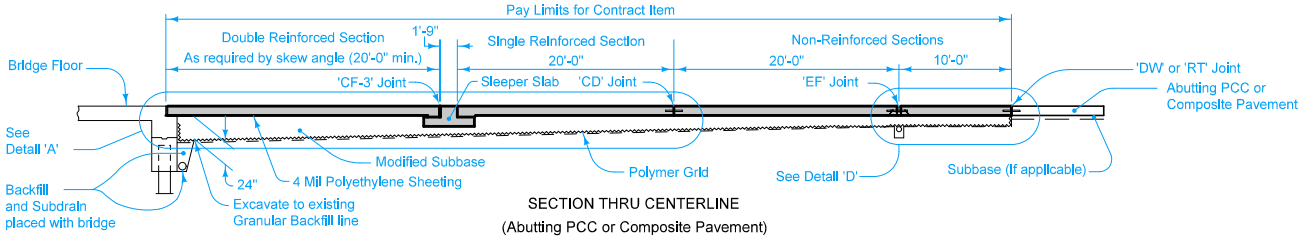

SECTION THRU CENTERLINE
(Abutting PCC or Composite Pavement)

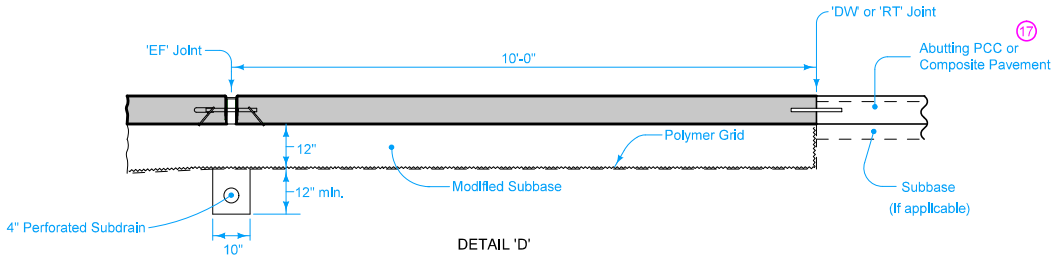

DETAIL 'D'
(Doweled PCC Pavement)

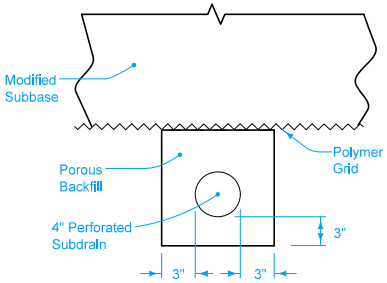

4" SUBDRAIN LOCATION

17 If abutting pavement (PCC or HMA) is not in place, refer to BR-213.

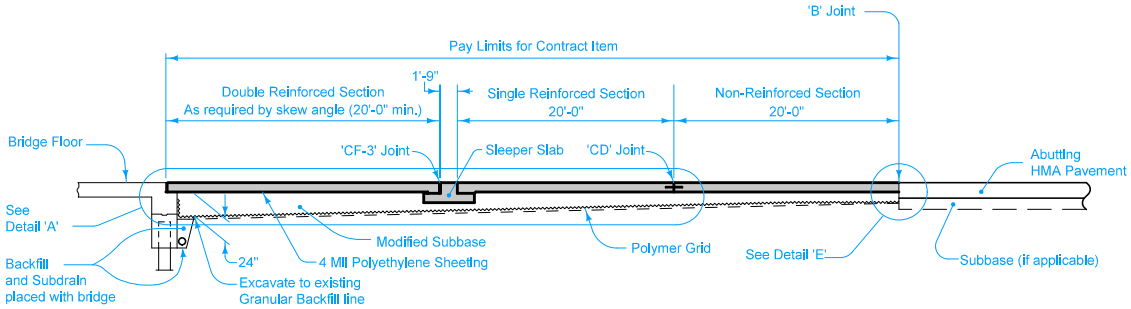

SECTION THRU CENTERLINE
(Abutting HMA Pavement)

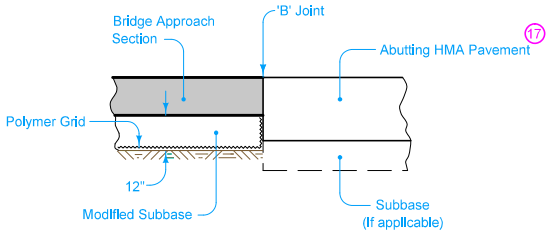

DETAIL 'E'

IOWA DOT

STANDARD ROAD PLAN

REVISION	
5	10-15-19

BR-205

SHEET 3 of 4

REVISIONS: Modified leader line for circle note 4 in PLAN VIEW on Sheet 1.

APPROVED BY DESIGN METHODS ENGINEER

DOUBLE REINFORCED 12" APPROACH (SLAB BRIDGE)

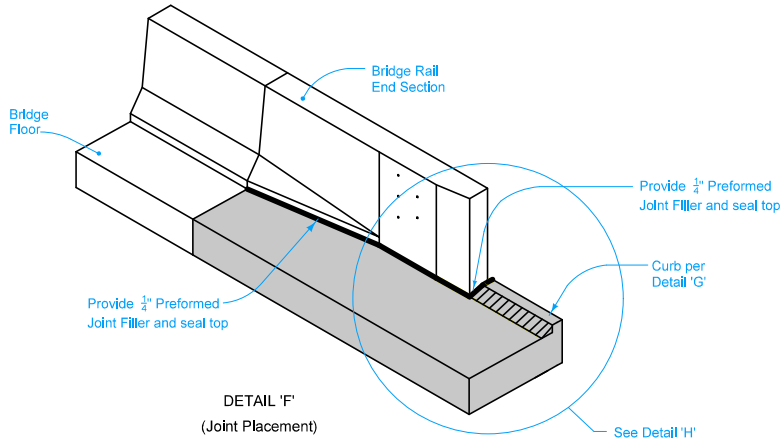

DETAIL 'F'

(Joint Placement)

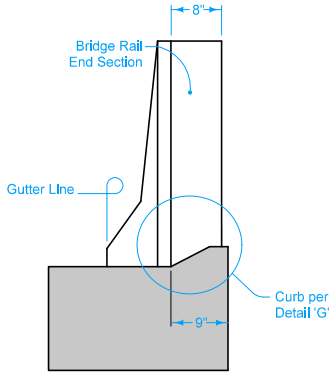

DETAIL 'H'

(Back of Curb Placement)

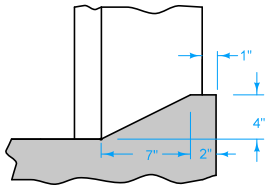

DETAIL 'G'

IOWA DOT

STANDARD ROAD PLAN

REVISION	
5	10-15-19

BR-205

SHEET 4 of 4

REVISIONS: Modified leader line for circle note 4 in PLAN VIEW on Sheet 1.

APPROVED BY DESIGN METHODS ENGINEER

DOUBLE REINFORCED 12" APPROACH (SLAB BRIDGE)

For joint details, see PV-101.

1. Build 4 inch Sloped Curb to end of Double Reinforced Section.
2. See BR-201, BR-202, BR-203, or BR-204.
3. Longitudinal Joint (PV-101):
   Single Pour - Saw cut joint per Detail B .
   Two Pours - Use 'KS-1' joint (Single Reinforced Section).
   Use 'KS-2' joint (Double Reinforced Section).
4. Extend 'CD' and 'EF' joints where PCC Shoulder.
5. Polymer Grid and excavation limits of Modified Subbase 2 feet outside of pavement edge. See BR-201, BR-202, BR-203, or BR-204.
6. Slope subdrain to drain.
7. Place an "X" in the plastic concrete near the 'EF' joint at the outside edge of pavement.
8. Place 'RD' Joint where PCC shoulder. Place 'B' joint otherwise.

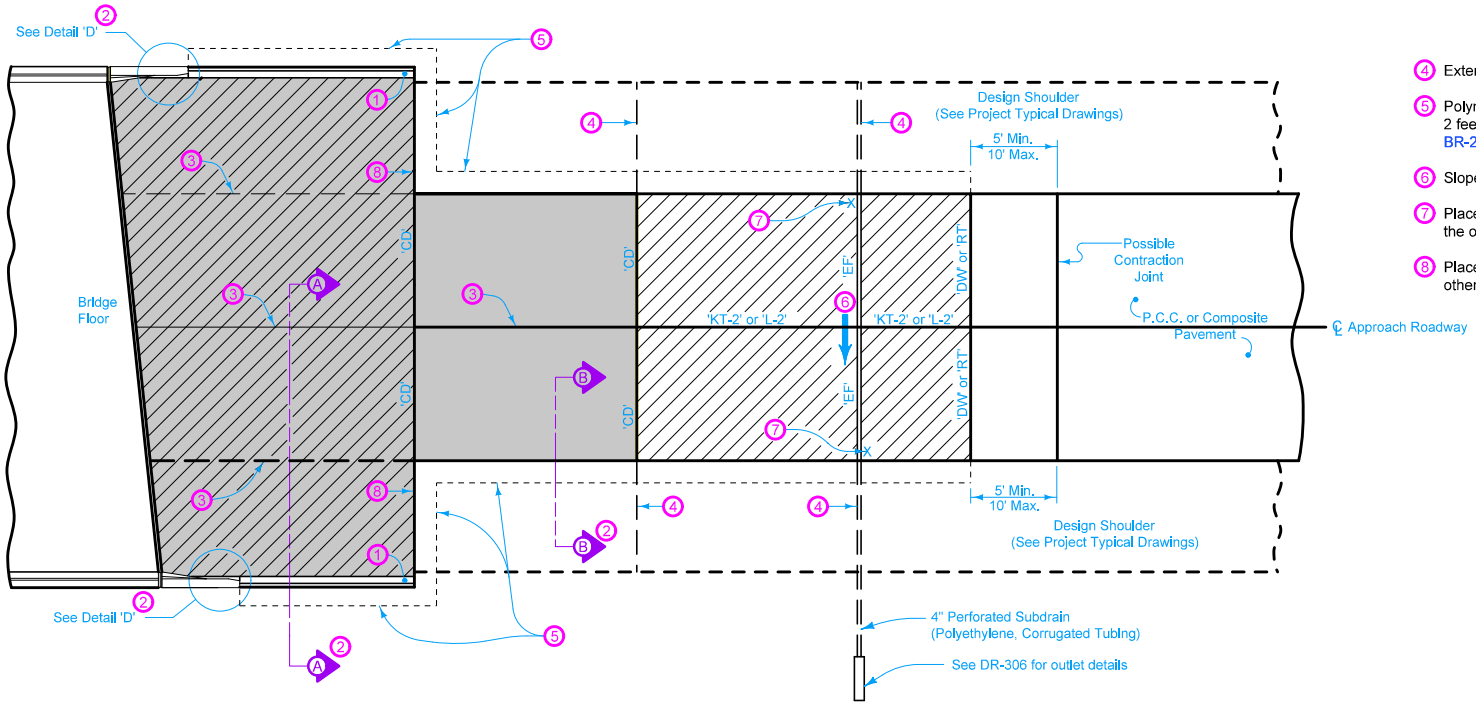

PLAN VIEW

Pay limits for contract item include the following areas:

- Double Reinforced Section
- Single Reinforced Section
- Non-Reinforced Section

IOWA DOT

STANDARD ROAD PLAN

REVISION	
1	10-17-17

BR-211

SHEET 1 of 1

REVISIONS: Changed DR-304 to DR-306.

Brian Smith
APPROVED BY DESIGN METHODS ENGINEER

BRIDGE APPROACH (ABUTTING PCC OR COMPOSITE PAVEMENT)

For joint details, see PV-101.

1. Build 4 inch Sloped Curb to end of Double Reinforced Section.
2. See BR-201, BR-202, BR-203, or BR-204.
3. Longitudinal Joint (PV-101):
   Single Pour - Saw cut joint per Detail B .
   Two Pours - Use 'KS-1' joint (Single Reinforced Section).
   Use 'KS-2' joint (Double Reinforced Section).
4. Extend 'CD' joints where PCC Shoulder.
5. Polymer Grid and excavation limits of Modified Subbase 2 feet outside of pavement edge. See BR-201, BR-202, BR-203, or BR-204.
6. Place 'RD' joint where PCC shoulder. Place 'B' joint otherwise.

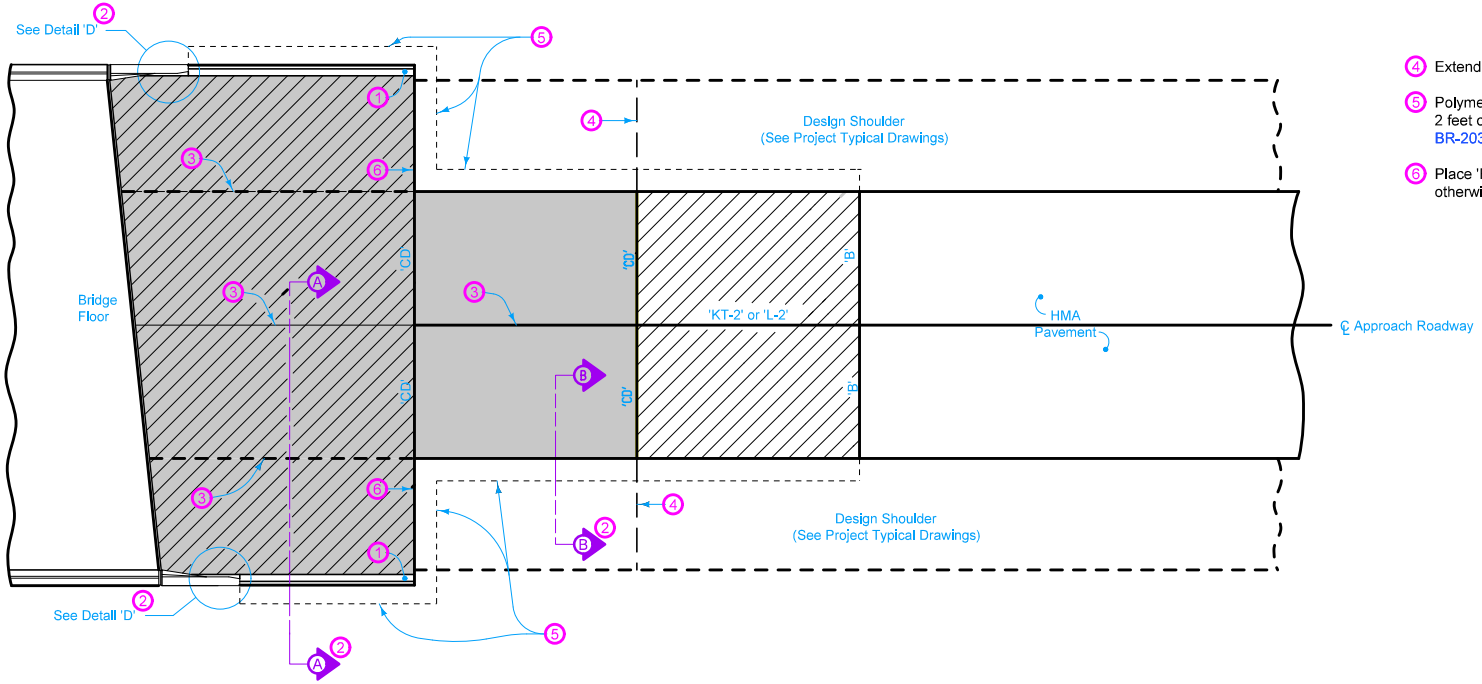

PLAN VIEW

Pay limits for contract item include the following areas:

- Double Reinforced Section
- Single Reinforced Section
- Non-Reinforced Section

IOWA DOT

STANDARD ROAD PLAN

REVISION	
New	04-21-15

BR-212

SHEET 1 of 1

REVISIONS: New. Replaces RK-22.

Brian Smith
APPROVED BY DESIGN METHODS ENGINEER

BRIDGE APPROACH (ABUTTING HMA PAVEMENT)

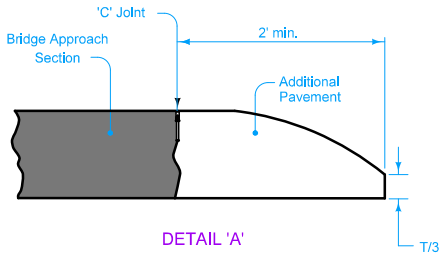

DETAIL 'A'

SECTION A-A

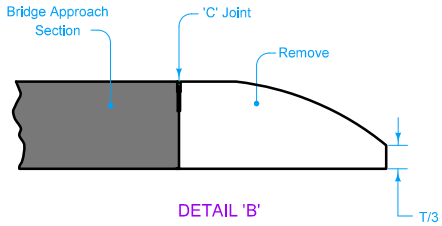

DETAIL 'B'

SECTION A-A

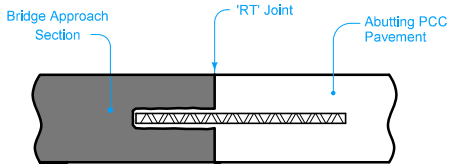

(For Abutting PCC Pavement)

DETAIL 'C'

SECTION A-A

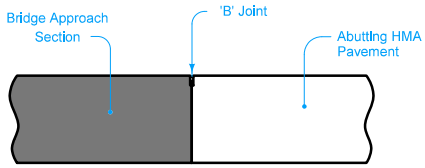

(For Abutting HMA Pavement)

DETAIL 'C'

SECTION A-A

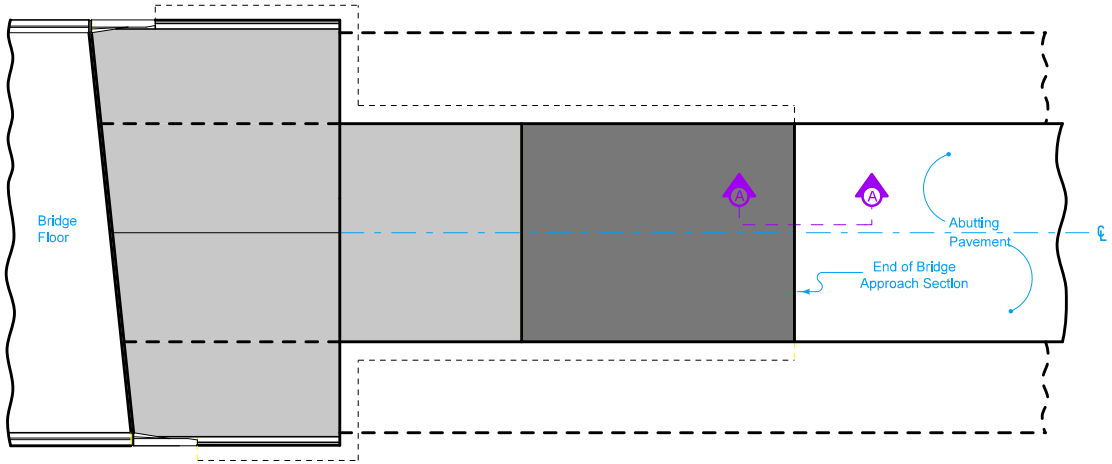

PLAN VIEW

For Jointing Details, see PV-101.

If abutting pavement (PCC or HMA) is not in place when bridge approach pavement is constructed, the following procedure applies:

1. The paving contractor of bridge the approach pavement paves Additional Pavement (as shown in Detail 'A'), constructs 'C' joint at end of bridge approach section, and leaves in this state.
2. The paving contractor of the abutting pavement saw cuts full depth at 'C' joint and removes Addtional Pavement (see Detail 'B'), then
3. The paving contractor of the abutting pavement constructs 'RT' joint or 'B' joint, accordingly (see Detail 'C').

This work is incidental to other work as follows:

Detail 'A': Bridge Approach, BR-203.

Details 'B' and 'C': Standard or Slip Form PCC Pavement, or Hot Mix Asphalt Mixture.

Reinforced Section

Non-Reinforced Section

IOWA DOT

STANDARD ROAD PLAN

REVISION	
New	04-21-15

BR-213

SHEET 1 of 1

REVISIONS: New. Replaces RK-30.

Brian Smith

APPROVED BY DESIGN METHODS ENGINEER

BRIDGE APPROACH (ABUTTING PAVEMENT)

For joint details, see PV-101.

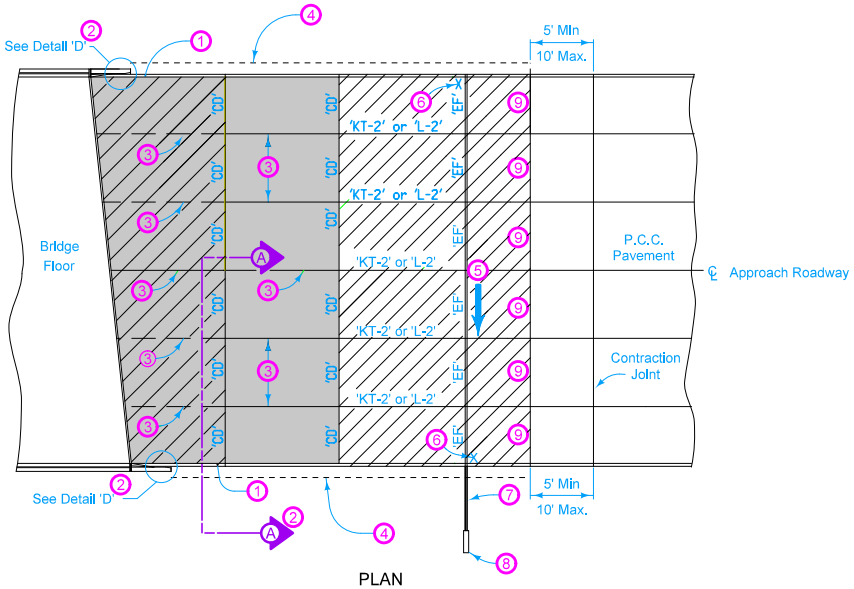

PLAN

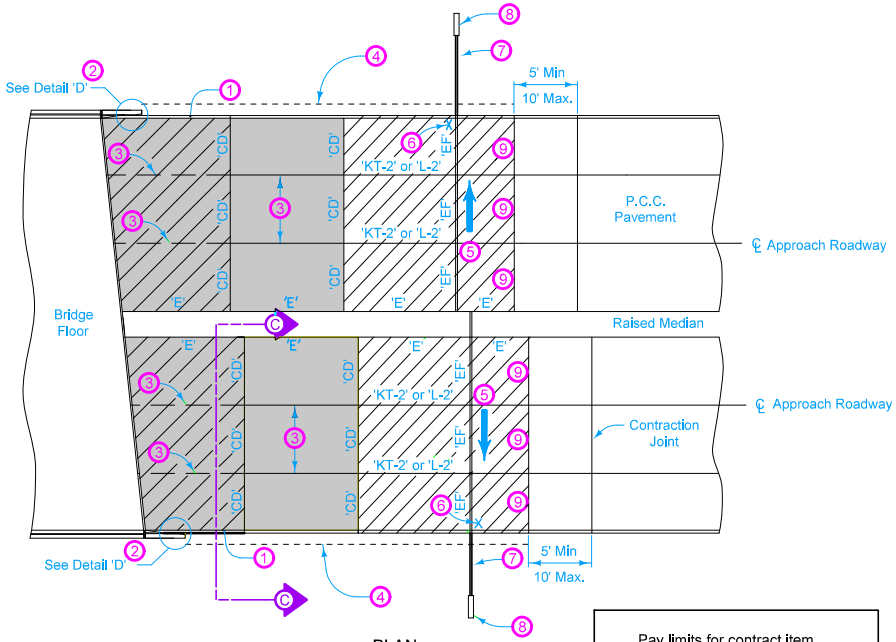

PLAN

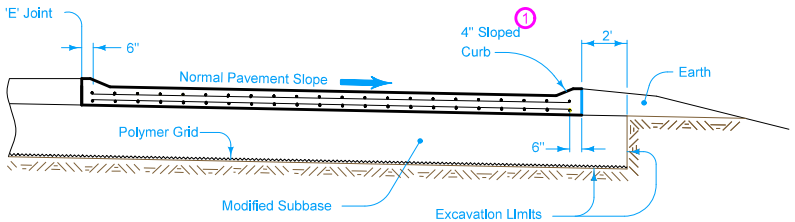

SECTION C-C

1. Build 4 inch Sloped Curb, unless noted otherwise in the plans.
2. See BR-201, BR-202, BR-203, or BR-204.
3. Longitudinal Joint (PV-101):
   Single Pour - Saw cut joint per Detail B .
   Two Pours - Use 'KS-1' joint (Single Reinforced Section).
   Use 'KS-2' joint (Double Reinforced Section).
4. Polymer Grid and excavation limits of Modified Subbase 2 feet outside of pavement edge. See BR-201, BR-202,BR-203, or BR-204.
5. Slope subdrain to drain.
6. Place an "X" in the plastic concrete near the 'EF' joint at the outside edge of pavement.
7. 4 inch perforated subdrain (polyetheylene, corrugated tubing).
8. See DR-303 or DR-306 for outlet details
9. 'DW' or 'RT' joint.

Pay limits for contract item include the following areas:

- Double Reinforced Section
- Single Reinforced Section
- Non-Reinforced Section

IOWA DOT

STANDARD ROAD PLAN

REVISION	
1	10-17-17

BR-231

SHEET 1 of 1

REVISIONS: Changed DR-304 to DR-306.

Brian Smith
APPROVED BY DESIGN METHODS ENGINEER

BRIDGE APPROACH (MULTI-LANE, CURBED ROADWAY)

DESIGNER INFO

For joint details, refer to PV-101.

For curb details, see Detail 'F'.

All transverse bars are #5.

1. 2" min. to 2 1/2" max. clear to bent bar.
2. Minimum lap length: #5 Bars - 38"
   #6 Bars - 45"
   #8 Bars - 59"
3. If bridge is skewed, place additional #5 bar parallel to skewed face.

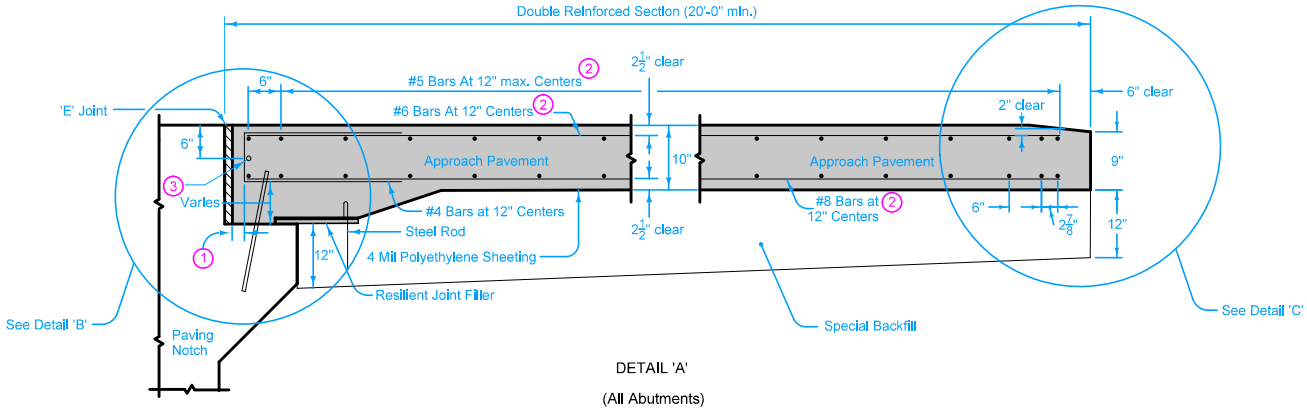

DETAIL 'A'

(All Abutments)

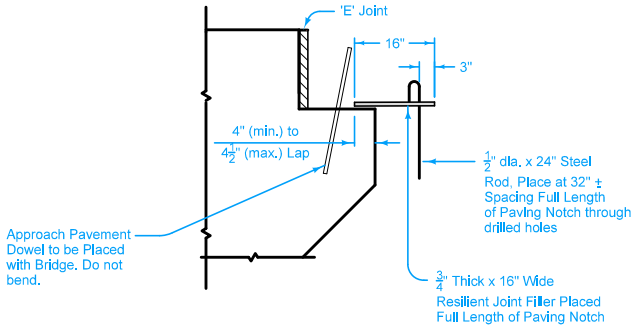

DETAIL 'B'

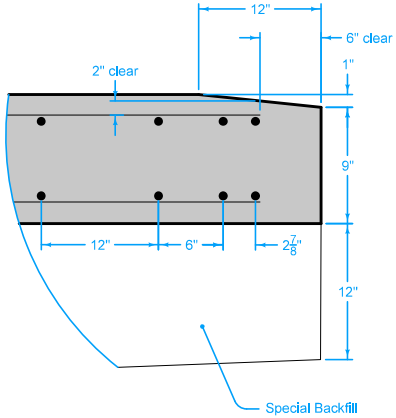

DETAIL 'C'

(Pavement Bevel)

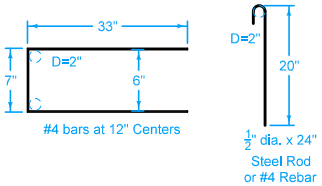

BENT BAR SHAPES

Possible Contract Item:
Bridge Approach, BR-241

Possible Tabulation:
112-6

IOWA DOT

STANDARD ROAD PLAN

REVISION	
New	04-18-17

BR-241

SHEET 1 of 3

REVISIONS: New.

Brian Smith
APPROVED BY DESIGN METHODS ENGINEER

DOUBLE REINFORCED 10" APPROACH ON GRAVEL ROADS

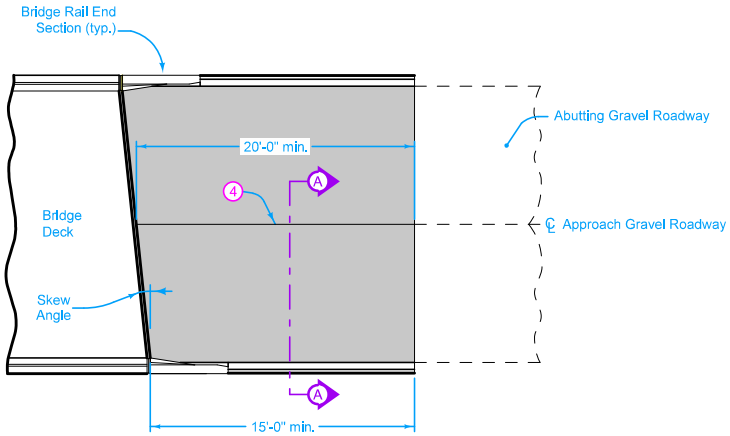

PLAN VIEW

4 Longitudinal Joint (PV-101):
Single pour - Saw cut joint per Detail B.
Two pours - Use 'KS-2' joint.

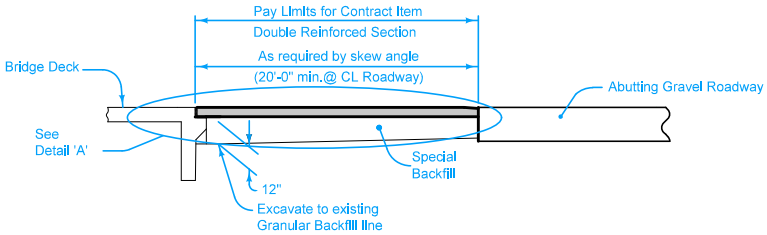

SECTION THRU CENTERLINE

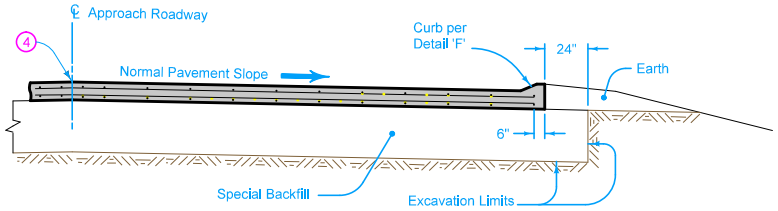

SECTION A-A

IOWA DOT

STANDARD ROAD PLAN

REVISION	
New	04-18-17

BR-241

SHEET 2 of 3

REVISIONS: New.

Brian Smith
APPROVED BY DESIGN METHODS ENGINEER

DOUBLE REINFORCED 10" APPROACH ON GRAVEL ROADS

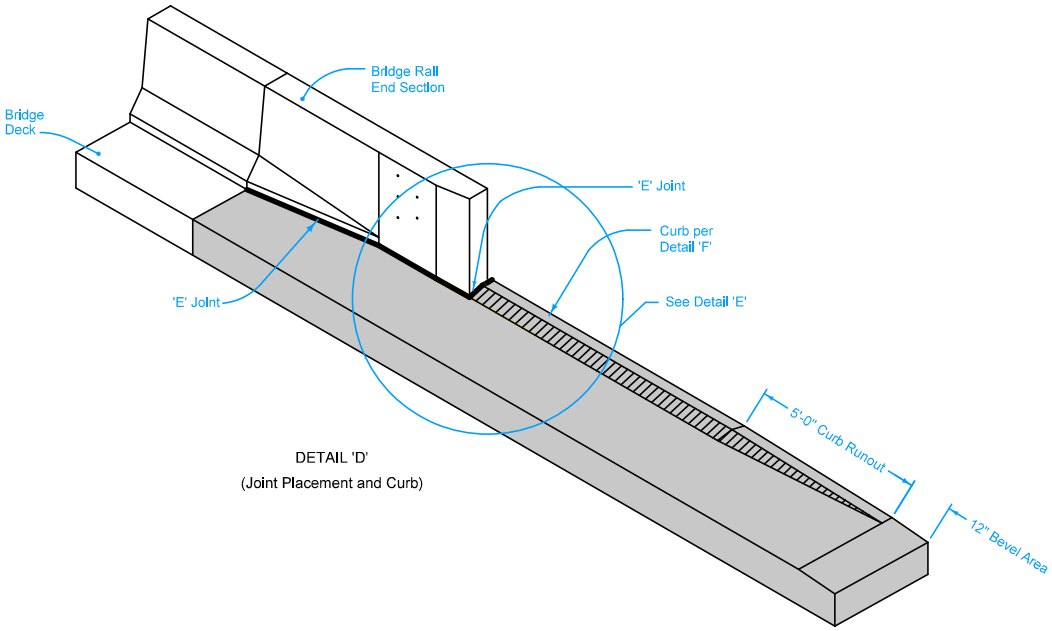

DETAIL 'D'
(Joint Placement and Curb)

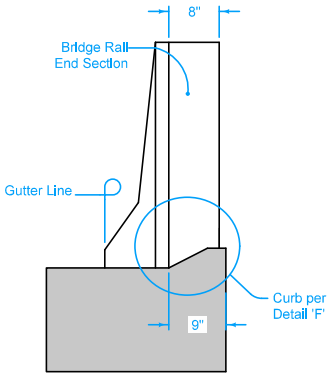

DETAIL 'E'
(Back of Curb Placement)

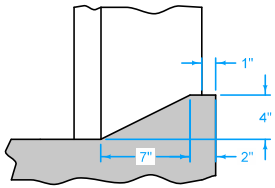

DETAIL 'F'

IOWA DOT

STANDARD ROAD PLAN

REVISION	
New	04-18-17

BR-241

SHEET 3 of 3

REVISIONS: New.

Brian Smith
APPROVED BY DESIGN METHODS ENGINEER

DOUBLE REINFORCED 10" APPROACH ON GRAVEL ROADS