Sanitary and Storm Sewers

SW

SECTION

SW

Storm and Sanitary Sewers

NO.	DATE	TITLE
		Trench and Backfill
SW-101	04-17-18	Trench Bedding and Backfill Zones
SW-102	04-16-19	Rigid Gravity Pipe Trench Bedding
SW-103	04-16-19	Flexible Gravity Pipe Trench Bedding
SW-104	04-21-20	Pressure Pipe Trench Bedding
SW-105	04-17-18	Miscellaneous Pipe Bedding
		General Sewer
SW-201	04-21-20	Sanitary Sewer Service Stub
SW-202	04-21-20	Sewage Air Release Valve Pit
SW-203	04-17-18	Sanitary Sewer Cleanout
SW-211	04-17-18	Storm Sewer Pipe Connections
		Sanitary Sewer Manholes
SW-301	04-21-20	Circular Sanitary Sewer Manhole
SW-302	04-21-20	Rectangular Sanitary Sewer Manhole
SW-303	04-21-20	Sanitary Sewer Manhole over Existing Sewer
SW-304	04-21-20	Rectangular Base/Circular Top Sanitary Sewer Manhole
SW-305	04-21-20	Tee-Section Sanitary Sewer Manhole
SW-306	04-21-15	Chimney Seals for Sanitary Sewer Manholes
SW-307	04-21-20	Drop Connection for Sanitary Sewer
SW-308	04-21-20	Internal Drop Connection for Sanitary Sewer Manhole
SW-350	04-17-18	Travel Trailer Dump Station
		Storm Sewer Manholes
SW-401	04-21-20	Circular Storm Sewer Manhole
SW-402	04-21-20	Rectangular Storm Sewer Manhole
SW-403	04-21-20	Deep Well Rectangular Storm Sewer Manhole
SW-404	04-21-20	Rectangular Base/Circular Top Storm Sewer Manhole
SW-405	04-21-20	Tee-Section Storm Sewer Manhole
SW-406	04-21-20	Shallow Rectangular Storm Sewer Manhole

Storm and Sanitary Sewers

NO.	DATE	TITLE
		Storm Sewer Intakes
SW-501	04-21-20	Single Grate Intake
SW-502	04-21-20	Circular Single Grate Intake
SW-503	04-21-20	Single Grate Intake with Manhole
SW-504	04-21-20	Single Grate Intake with Flush-Top Manhole
SW-505	04-21-20	Double Grate Intake
SW-506	04-21-20	Double Grate Intake with Manhole
SW-507	04-21-20	Single Open-Throat Intake, Small Box
SW-508	04-21-20	Single Open-Throat Intake, Large Box
SW-509	04-21-20	Double Open-Throat Curb Intake, Small Box
SW-510	04-21-20	Double Open-Throat Curb Intake, Large Box
SW-511	04-21-20	Rectangular Area Intake
SW-512	04-21-20	Circular Area Intake
SW-513	04-21-20	Open-Sided Area Intake
SW-514	04-17-18	Boxouts for Grate Intakes
SW-515	04-21-20	Triple Rectangular Area Intake
SW-521	04-21-20	Linear Trench Drain
SW-538	10-15-19	Intake for Bridge End Drain
SW-539	10-15-19	Intake for Bridge End Drain (with Letdown)
SW-541	04-21-20	Open-Throat Curb Intake under Pavement
SW-542	10-20-20	Extension Unit for Open-Throat Curb Intake under Pavement
SW-545	04-21-20	Single Open-Throat Curb Intake with Extended Opening
SW-546	04-17-18	Single Open-Throat Barrier Intake
SW-547	04-17-18	Triple-Grate Barrier Intake
SW-548	10-16-18	Single-Grate Barrier Intake, Circular
SW-549	04-17-18	Single-Grate Barrier Intake, Rectangular
SW-550	04-17-18	Alternate Construction Method (SW-508 and SW-510 Intake)
SW-562	04-17-18	Vertical Throat Area Intake

SECTION

SW

Storm and Sanitary Sewers

NO.	DATE	TITLE
SW-563	04-17-18	Vertical Throat Area Intake (Large Box)
		Castings
SW-601	04-21-20	Castings for Sanitary Sewer Manholes
SW-602	04-21-20	Castings for Storm Sewer Manholes
SW-603	10-16-18	Castings for Grate Intakes
SW-604	04-21-20	Castings for Area Intakes

Refer to the contract documents for specific material and placement requirements.

(1) Required only when specified in the contract documents or when directed by the Engineer.

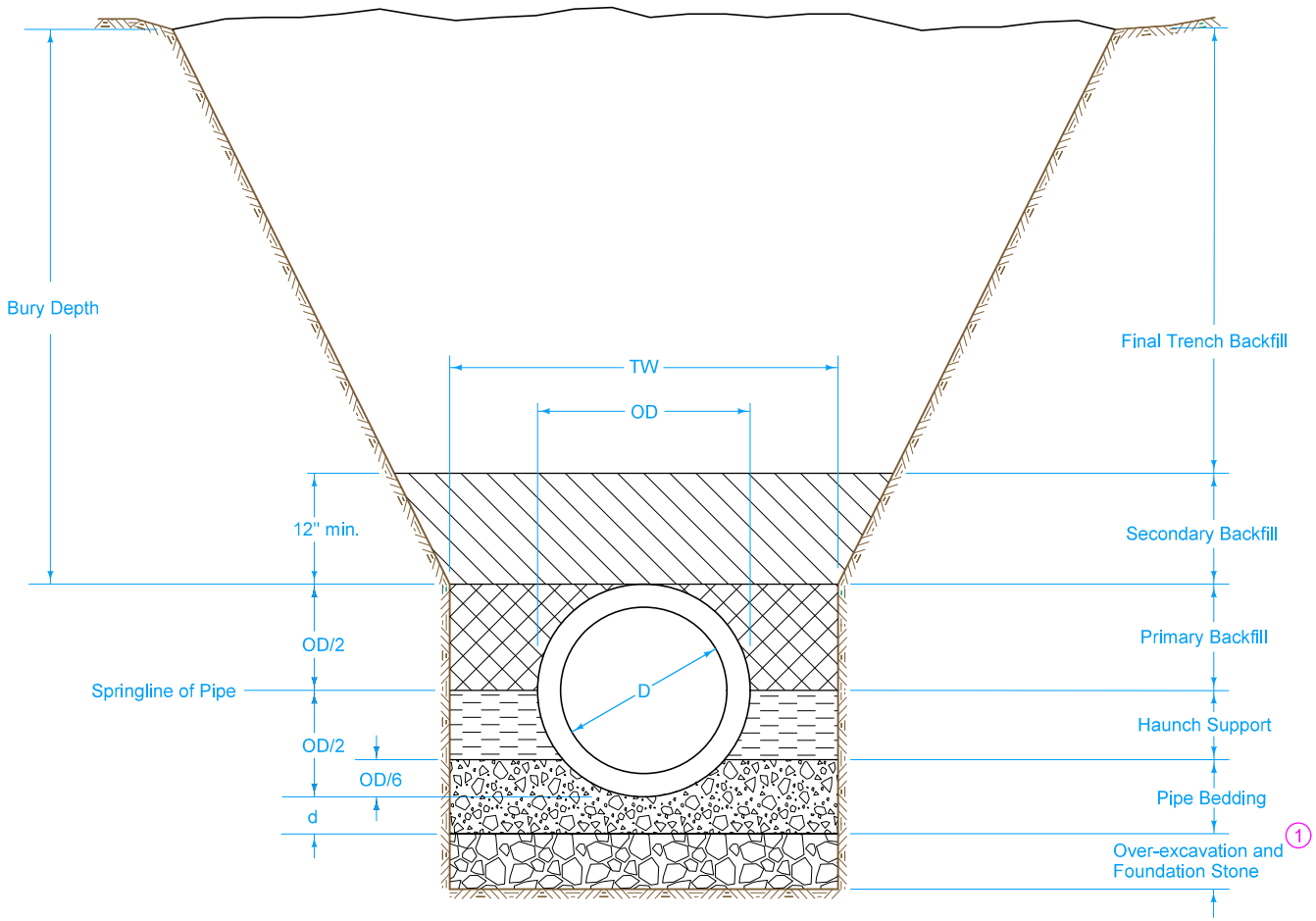

Key

OD = Outside diameter of pipe

D = Inside diameter of pipe

TW = Trench width at top of pipe

d = Depth of bedding material below pipe

SUDAS	IOWA DOT	REVISION 1 04-17-18
FIGURE 3010.101	STANDARD ROAD PLAN	SW-101 SHEET 1 of 1

REVISIONS: Replaced Iowa DOT and SUDAS logos.

Paul D. Wigand — SUDAS DIRECTOR

Brian Smith — DESIGN METHODS ENGINEER

TRENCH BEDDING AND BACKFILL ZONES

FIGURE 3010.101 SHEET 1 OF 1

RCP AND VCP CIRCULAR PIPE BEDDING (1)

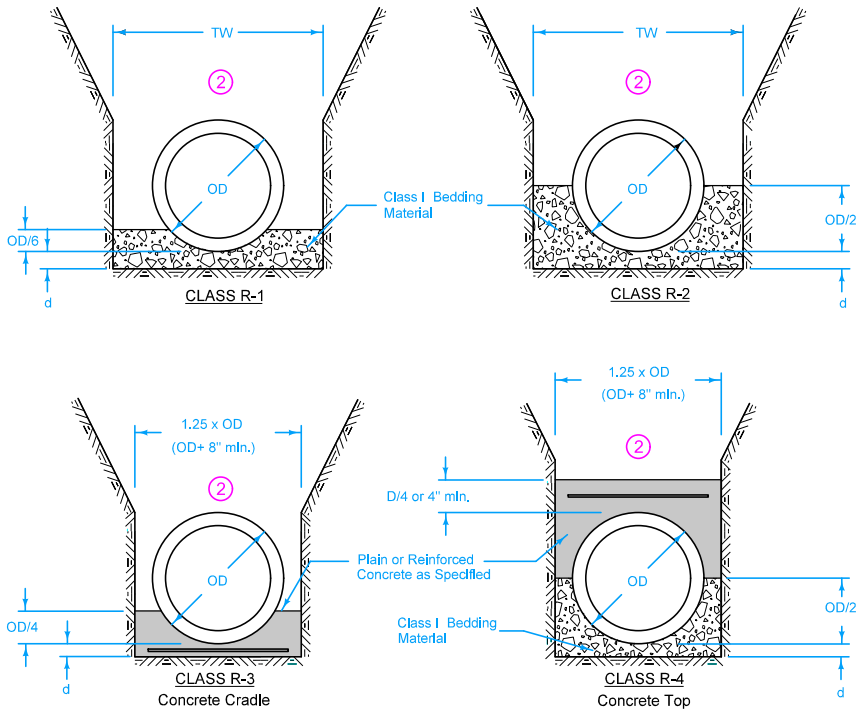

Refer to sheet 2 for bury depth restrictions.

(1) Use Bedding Class R-1 or R-2 unless specified otherwise.

(2) Place remainder of bedding and backfill materials as specified in the contract documents.

Key

OD	=	Outside diameter of pipe
OS	=	Outside span of pipe
TW	=	Trench width at top of pipe: Min. = OD+18 Inches Max.= 1.25xOD+12 inches OR 54 Inches (whichever is greater)
d	=	Depth of bedding material below pipe: OD/8 or OS/8, OR 4 inches (whichever is greater)

REINFORCED CONCRETE ARCH AND ELLIPTICAL PIPE BEDDING

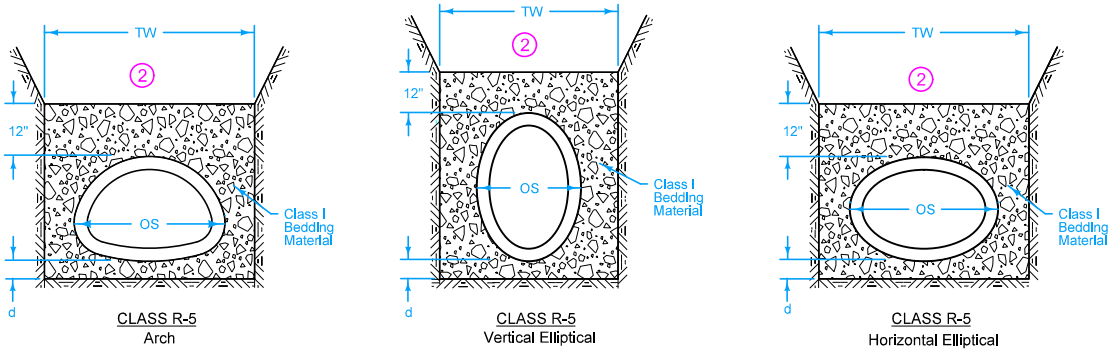

FIGURE 3010.102 | SHEET 1 OF 2

SUDAS | IOWA DOT

REVISION 3 04-16-19

FIGURE 3010.102 | STANDARD ROAD PLAN | SW-102

SHEET 1 of 2

REVISIONS: Changed Class 1 to Class I in CLASS R-5 Vertical Elliptical detail.

SUDAS DIRECTOR | DESIGN METHODS ENGINEER

RIGID GRAVITY PIPE TRENCH BEDDING

ALLOWABLE BURY DEPTH

CLASS III RCP

Pipe Diameter (in)	Class R-1 Bedding	Class R-2 Bedding	Class R-3 & R-4 Bedding		
			No Steel	As=0.4%	As=1.0%
12	7'	10'	15'	19'	27'
15	8'	10'	16'	19'	27'
18	8'	11'	16'	20'	40'
21	8'	11'	18'	26'	40'
24	8'	12'	23'	36'	40'
27	10'	15'	30'	40'	40'
30	11'	15'	29'	40'	40'
33	11'	15'	28'	40'	40'
36	11'	15'	27'	40'	40'
42	11'	15'	26'	38'	40'
48	11'	15'	26'	36'	40'
54	11'	15'	25'	34'	40'
60	11'	15'	25'	33'	40'
66	11'	15'	24'	32'	40'
72	11'	15'	24'	32'	40'
As = Area of Steel Reinforcing					

CLASS IV RCP

Pipe Diameter (in)	Class R-1 Bedding	Class R-2 Bedding	Class R-3 & R-4 Bedding		
			No Steel	As=0.4%	As=1.0%
12	12'	15'	23'	28'	40'
15	12'	16'	23'	30'	40'
18	13'	16'	29'	40'	40'
21	13'	18'	40'	40'	40'
24	16'	23'	40'	40'	40'
27	19'	30'	40'	40'	40'
30	19'	29'	40'	40'	40'
33	19'	28'	40'	40'	40'
36	19'	28'	40'	40'	40'
42	18'	27'	40'	40'	40'
48	18'	26'	40'	40'	40'
54	18'	25'	40'	40'	40'
60	18'	25'	40'	40'	40'
66	18'	25'	40'	40'	40'
72	18'	24'	40'	40'	40'
As = Area of Steel Reinforcing					

CLASS V RCP

Pipe Diameter (in)	Class R-1 Bedding	Class R-2 Bedding	Class R-3 & R-4 Bedding		
			No Steel	As=0.4%	As=1.0%
12	18'	23'	35'	40'	40'
15	19'	24'	40'	40'	40'
18	19'	30'	40'	40'	40'
21	25'	40'	40'	40'	40'
24	34'	40'	40'	40'	40'
27	40'	40'	40'	40'	40'
30	40'	40'	40'	40'	40'
33	40'	40'	40'	40'	40'
36	40'	40'	40'	40'	40'
42	37'	40'	40'	40'	40'
48	35'	40'	40'	40'	40'
54	33'	40'	40'	40'	40'
60	32'	40'	40'	40'	40'
66	31'	40'	40'	40'	40'
72	31'	40'	40'	40'	40'
As = Area of Steel Reinforcing					

EXTRA STRENGTH VCP

Pipe Dia. (in)	Bedding Class				
	R-1	R-2	R-3 & R-4		
			No Steel	As=0.4%	As=1.0%
6	25'	30'	30'	30'	30'
8	20'	26'	30'	30'	30'
10	18'	23'	30'	30'	30'
12	16'	20'	30'	30'	30'
15	15'	19'	28'	30'	30'
18	14'	18'	30'	30'	30'
21	15'	22'	30'	30'	30'
24	18'	28'	30'	30'	30'
27	20'	30'	30'	30'	30'
30	19'	29'	30'	30'	30'
33	20'	30'	30'	30'	30'
36	20'	30'	30'	30'	30'
39	19'	29'	30'	30'	30'
42	18'	26'	30'	30'	30'
As = Area of Steel Reinforcing					

CONCRETE ARCH PIPE

Pipe Size (in x in)	Equiv. Dia. (in)	Pipe Class	
		A-III	A-IV
18 x 11	15	6'	11'
22 x 13	18	6'	11'
26 x 15	21	6'	13'
29 x 18	24	7'	15'
36 x 22	30	8'	15'
44 x 27	36	8'	14'
51 x 31	42	8'	15'
58 x 36	48	8'	15'
65 x 40	54	8'	15'
73 x 45	60	8'	14'
88 x 54	72	9'	14'
Based on Class R-5 bedding			

HORIZONTAL ELLIPTICAL RCP

Pipe Size (in x in)	Equiv. Dia. (in)	Pipe Class	
		HE-III	HE-IV
14 x 23	18	12'	22'
19 x 30	24	15'	29'
22 x 34	27	15'	28'
24 x 38	30	15'	27'
27 x 42	33	15'	27'
29 x 45	36	15'	26'
32 x 49	39	15'	26'
34 x 54	42	15'	25'
38 x 60	48	15'	25'
43 x 68	54	15'	24'
48 x 76	60	15'	24'
53 x 83	66	15'	24'
58 x 91	72	15'	24'
63 x 98	78	15'	23'
68 x 106	84	15'	23'
Based on Class R-5 bedding			

VERTICAL ELLIPTICAL RCP

Pipe Size (in x in)	Equiv. Dia. (in)	Pipe Class			
		VE-III	VE-IV	VE-V	VE-VI
23 x 14	18	10'	15'	22'	33'
30 x 19	24	10'	16'	34'	40'
34 x 22	27	11'	20'	40'	40'
38 x 24	30	12'	23'	40'	40'
42 x 27	33	15'	30'	40'	40'
45 x 29	36	15'	29'	40'	40'
49 x 32	39	15'	29'	40'	40'
54 x 34	42	15'	28'	40'	40'
60 x 38	48	15'	27'	40'	40'
68 x 43	54	15'	27'	40'	40'
76 x 48	60	15'	26'	40'	40'
83 x 53	66	15'	25'	40'	40'
91 x 58	72	15'	25'	40'	40'
98 x 63	78	15'	25'	40'	40'
106 x 68	84	15'	24'	40'	40'
Based on Class R-5 bedding					

SUDAS | IOWA DOT

REVISION 3 04-16-19

FIGURE 3010.102 | STANDARD ROAD PLAN | SW-102

SHEET 2 of 2

REVISIONS: Changed Class 1 to Class I in CLASS R-5 Vertical Elliptical detail.

SUDAS DIRECTOR | DESIGN METHODS ENGINEER

RIGID GRAVITY PIPE TRENCH BEDDING

FIGURE 3010.102 | SHEET 2 OF 2

BEDDING CLASSES

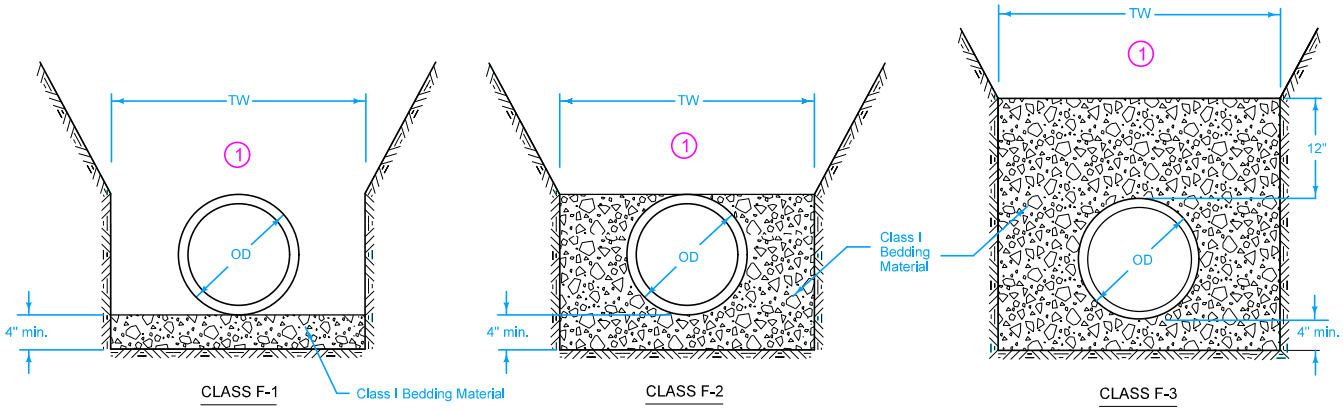

1. Place remainder of bedding and backfill materials as specified in the contract documents.
2. Minimum depth of bury 12 inches or as specified by the manufacturer.

ALLOWABLE BEDDING CLASSES

PIPE MATERIAL	STORM SEWER	SANITARY SEWER
Ductile Iron	F-1, F-2, F-3	F-1, F-2, F-3
HDPE	F-2, F-3	Not allowed
Polypropylene	F-2, F-3	F-3
PVC	F-2, F-3	F-3

Key

OD = Outside diameter of pipe

TW = Trench width at top of pipe:
Min. = OD+18 Inches OR 1.25xOD+12 Inches
(whichever is greater)

ALLOWABLE BURY DEPTH (2)

PVC PIPE

Pipe Diameter (in)	ASTM D 3034			ASTM F 679	ASTM F 949	ASTM F 1803	ASTM D 2680
	Solid Wall			Solid Wall	Corrug. Exterior	Closed Profile	Composite (Truss Type)
	SDR 23.5	SDR 26	SDR 35	SDR 35			
8	30'	28'	24'	---	24'	---	32'
10	30'	28'	24'	---	24'	---	32'
12	30'	28'	24'	---	24'	---	32'
15	30'	28'	24'	---	24'	---	32'
18	---	---	---	24'	24'	---	---
21	---	---	---	24'	24'	24'	---
24	---	---	---	24'	24'	24'	---
27	---	---	---	24'	---	24'	---
30	---	---	---	24'	24'	24'	---
33	---	---	---	24'	---	---	---
36	---	---	---	24'	24'	24'	---
42	---	---	---	24'	---	24'	---
48	---	---	---	24'	---	24'	---
54	---	---	---	---	---	24'	---
60	---	---	---	---	---	24'	---

DUCTILE IRON, AWWA C151, CLASS 52

Pipe Diameter (in)	Class F-1 Bedding	Class F-2 Bedding	Class F-3 Bedding
4	40'	40'	40'
6	40'	40'	40'
8	40'	40'	40'
10	40'	40'	40'
12	37'	40'	40'
14	31'	40'	40'
16	28'	37'	40'
18	25'	34'	40'
20	23'	32'	40'
24	20'	29'	38'
30	18'	23'	31'
36	18'	22'	30'
42	17'	21'	29'
48	16'	19'	27'
54	16'	19'	27'

HDPE PIPE

Pipe Diameter (in)	AASHTO M 294
12	8'
15	9'
18	9'
24	9'
30	9'
36	9'
42	8'
48	8'
54	8'
60	8'

POLYPROPYLENE PIPE

Pipe Diameter (In)	ASTM F 2764
12	24'
15	25'
18	22'
24	20'
30	22'
36	21'
42	22'
48	23'
54	21'
60	21'

SUDAS | IOWA DOT

REVISION 3 04-16-19

FIGURE 3010.103 | STANDARD ROAD PLAN | SW-103

SHEET 1 of 1

REVISIONS: Removed ASTM F 2736 from Polypropylene Pipe table. Changed Class 1 to Class I in the CLASS F-2 and CLASS F-3 details.

SUDAS DIRECTOR | DESIGN METHODS ENGINEER

FLEXIBLE GRAVITY PIPE TRENCH BEDDING

FIGURE 3010.103 | SHEET 1 OF 1

BEDDING CLASSES

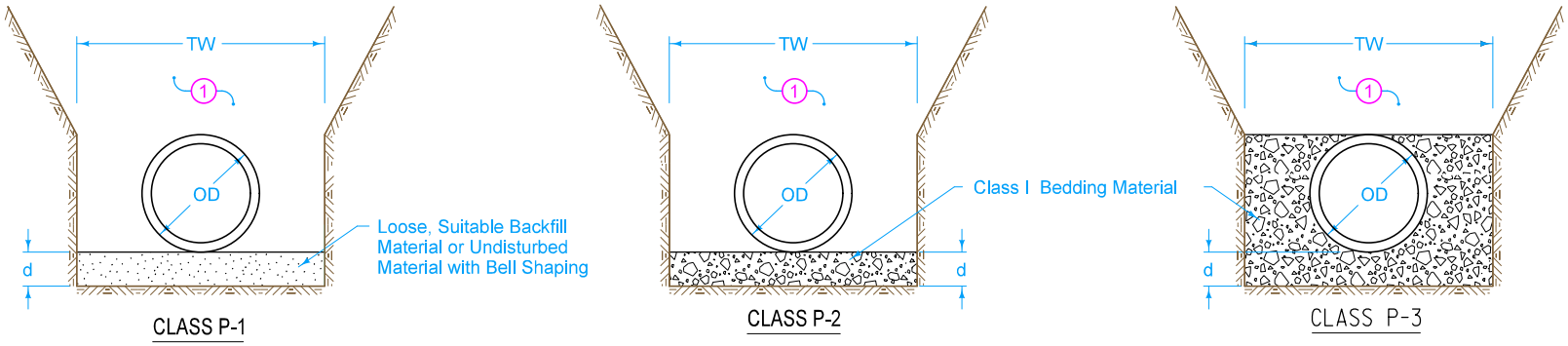

ALLOWABLE BURY DEPTH

DUCTILE IRON, AWWA C151, CLASS 52

Pipe Diameter (inches)	Class P-1 Bedding	Class P-2 Bedding	Class P-3 Bedding
4	40'	40'	40'
6	40'	40'	40'
8	40'	40'	40'
10	36'	40'	40'
12	31'	40'	40'
14	26'	40'	40'
16	23'	37'	40'
18	20'	34'	40'
20	18'	32'	40'
24	16'	29'	38
30	13'	23'	31'
36	13'	22'	30'
42	13'	21'	29'
48	13'	19'	27'
54	13'	19'	27'

PVC, AWWA C900, DR18

Pipe Diameter (inches)	Class P-1 Bedding	Class P-2 Bedding	Class P-3 Bedding
4	19'	23'	40'
6	19'	23'	40'
8	19'	23'	40'
10	19'	23'	40'
12	19'	23'	40'
14	19'	23'	40'
16	19'	23'	40'
18	19'	23'	40'
20	19'	23'	40'
24	19'	23'	40'

(1) Place remainder of bedding and backfill material as specified in the contract documents.

Key

OD = Outside diameter of pipe

TW = Trench width at top of pipe:
Min. = OD+18 inches OR 1.25xOD+12 inches
(whichever is greater)

d = Depth of bedding material below pipe:
Min. = OD/8 OR 4 inches
(whichever is greater)

SUDAS | IOWA DOT

FIGURE 3010.104 | STANDARD ROAD PLAN

REVISION 2 04-21-20

SW-104

SHEET 1 of 1

REVISIONS: Modified PVC Table Title.

SUDAS DIRECTOR | DESIGN METHODS ENGINEER

PRESSURE PIPE TRENCH BEDDING

FIGURE 3010.104 SHEET 1 OF 1

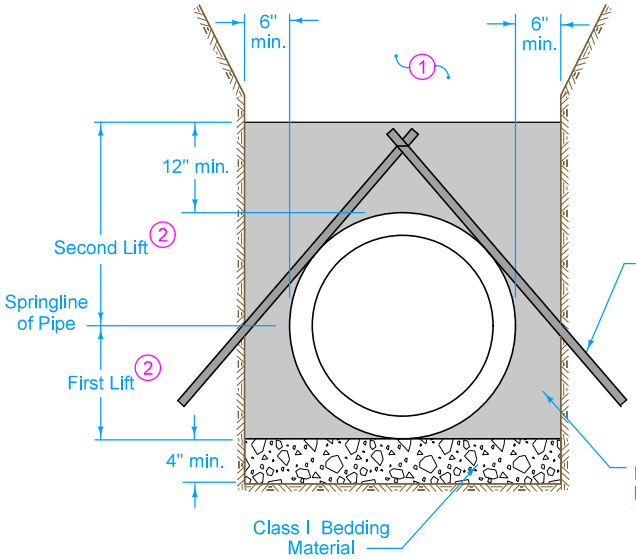

FLOWABLE MORTAR ENCASEMENT

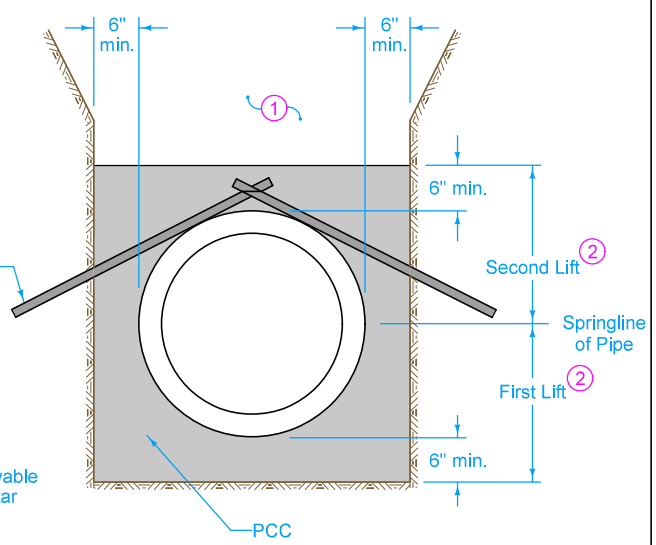

PCC ENCASEMENT

1. Place remainder of bedding and backfill material as specified in the contract documents.
2. Place encasement material in two lifts, or as required to prevent pipe flotation. Allow previous lift to reach initial set prior to placing subsequent lifts.
3. Restrain pipe as necessary to prevent flotation.
4. When specified in the contract documents, install waterstops at a nominal spacing of 800 feet or at locations as specified by the Engineer.

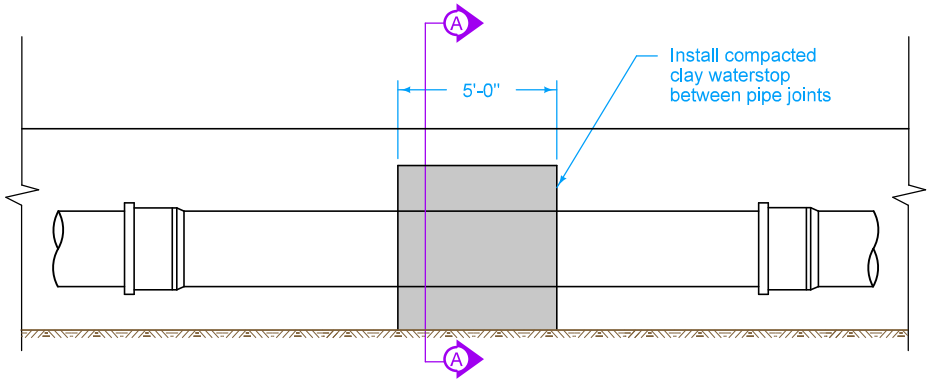

PROFILE

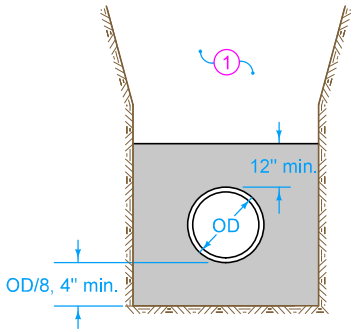

SECTION A-A

WATERSTOP FOR TRENCHES 4

FIGURE 3010.105 | SHEET 1 OF 1

SUDAS	IOWA DOT	REVISION 2 04-17-18
FIGURE 3010.105	STANDARD ROAD PLAN	SW-105 SHEET 1 of 1

REVISIONS: Replaced Iowa DOT and SUDAS logos.

Paul D. Wiegand, SUDAS DIRECTOR — Brian Smith, DESIGN METHODS ENGINEER

MISCELLANEOUS PIPE BEDDING

1. Place bedding and backfill material as required for sewer main.
2. Service Line Slope:
   4 inch: 2% to 5%
   6 inch and greater: 1% to 5%

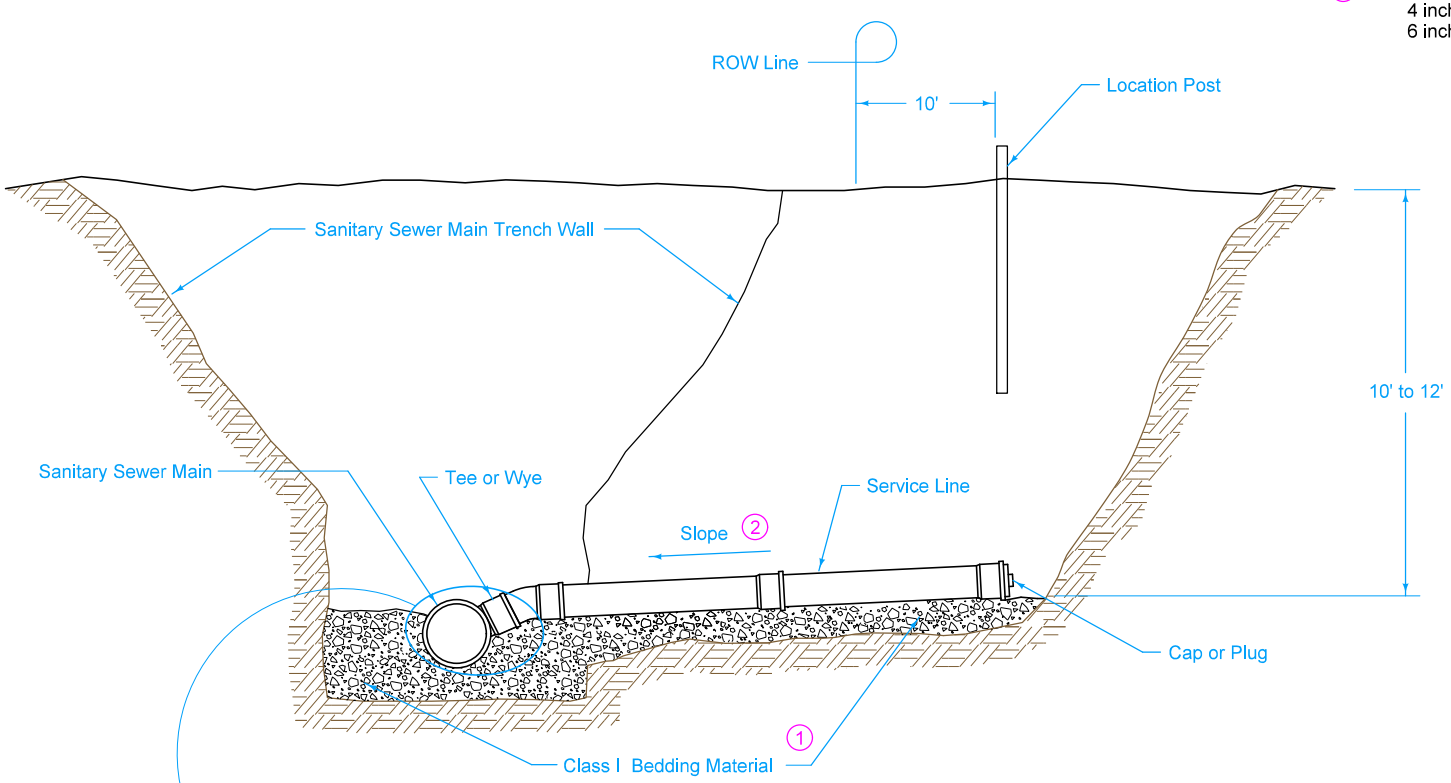

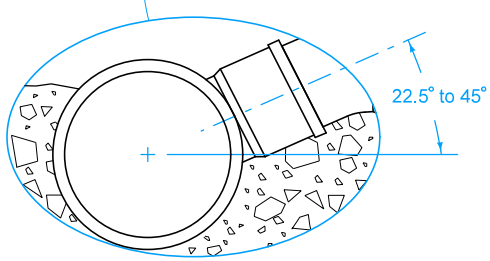

SANITARY SEWER SERVICE STUB

SUDAS	IOWA DOT	REVISION 2 04-21-20
FIGURE 4010.201	STANDARD ROAD PLAN	SW-201 SHEET 1 of 2

REVISIONS: Changed 1 to I on Bedding Material.

SUDAS DIRECTOR — DESIGN METHODS ENGINEER

SANITARY SEWER SERVICE STUB

FIGURE 4010.201 | SHEET 1 OF 2

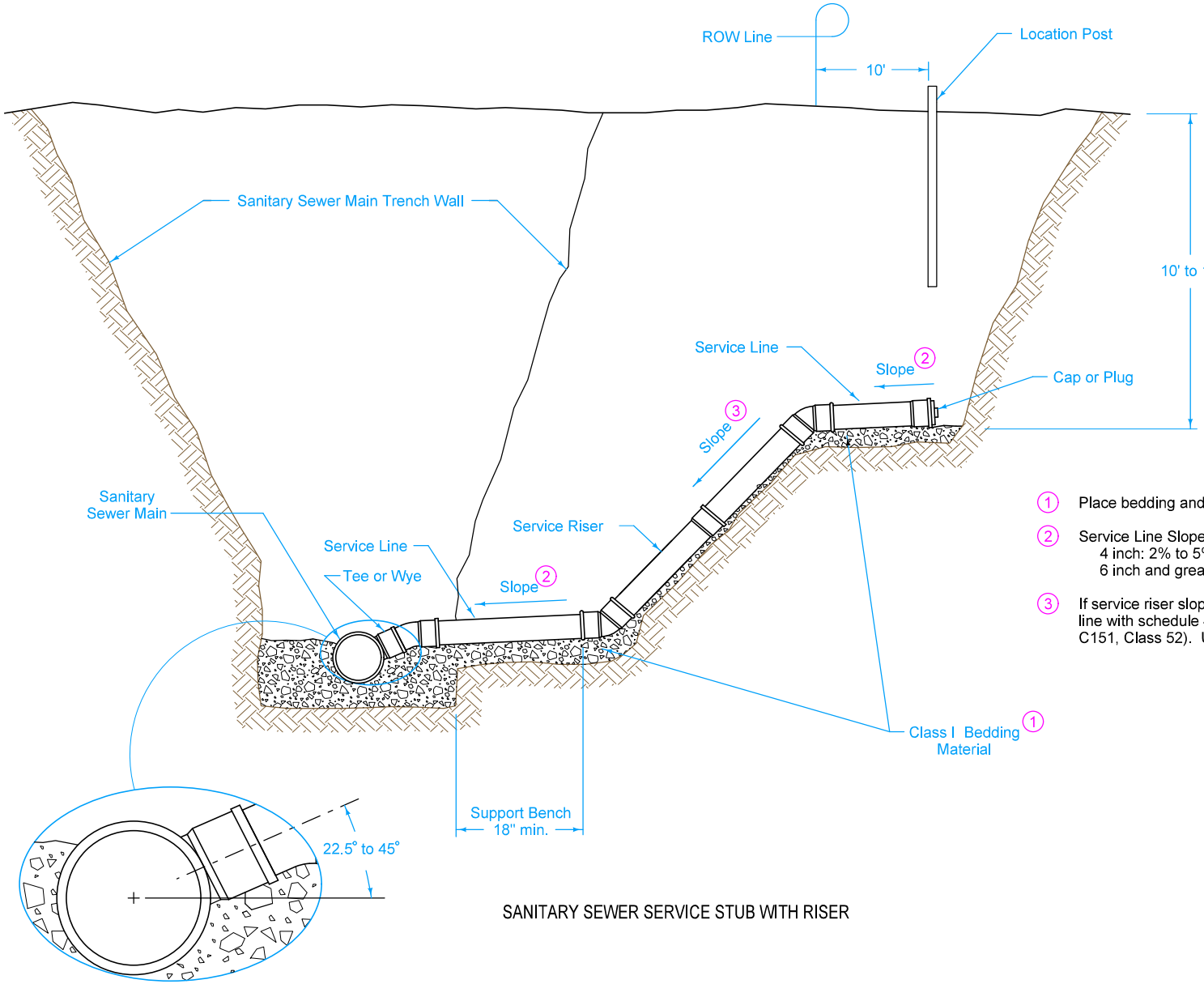

1 Place bedding and backfill material as required for sewer main.

2 Service Line Slope:
4 inch: 2% to 5%
6 inch and greater: 1% to 5%

3 If service riser slope is steeper than 1:1, construct riser of entire service line with schedule 40 PVC (ASTM D 1785) or ductile iron (AWWA C151, Class 52). Use single length of pipe for riser, if possible.

SANITARY SEWER SERVICE STUB WITH RISER

SUDAS	IOWA DOT	REVISION 2 04-21-20
FIGURE 4010.201	STANDARD ROAD PLAN	SW-201 SHEET 2 of 2

REVISIONS: Changed 1 to I on Bedding Material.

SUDAS DIRECTOR — DESIGN METHODS ENGINEER

SANITARY SEWER SERVICE STUB

FIGURE 4010.201 SHEET 2 OF 2

1. SW-601 Type A or SW-602 Type G casting.
2. Place bedding material to springline of pipe.
3. Prevent riser from bearing on pipe by providing an arched opening with a diameter up to 6 inches larger than pipe diameter.

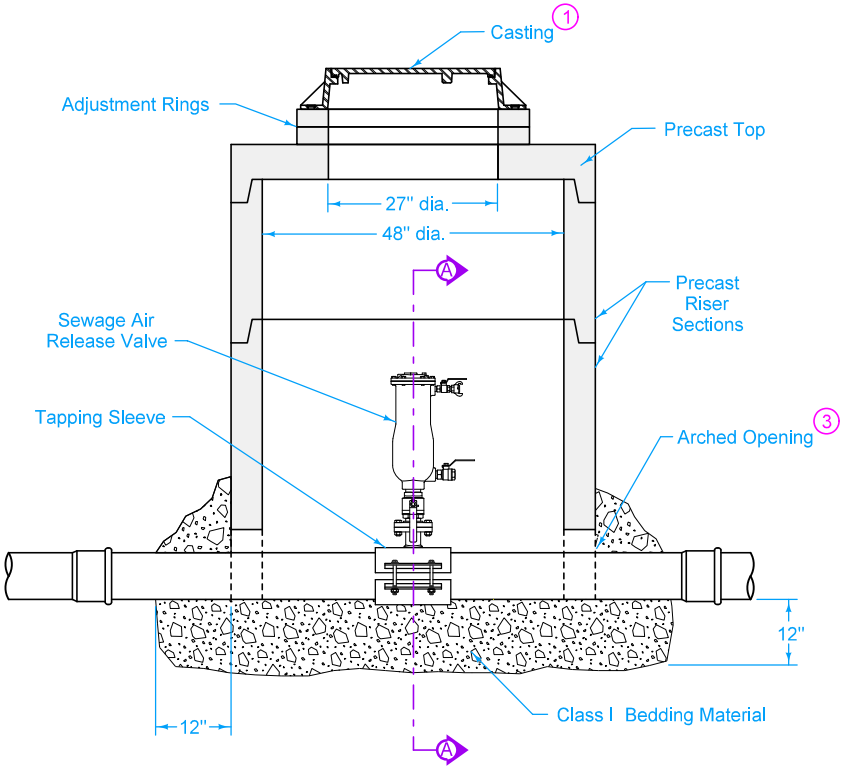

TYPICAL SECTION

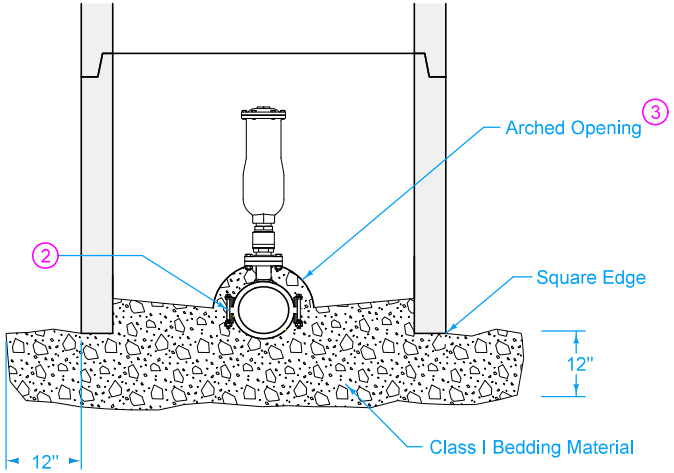

SECTION A-A

SUDAS	IOWA DOT	REVISION 2 04-21-20
FIGURE 4010.202	STANDARD ROAD PLAN	SW-202 SHEET 1 of 1

REVISIONS: Changed 1 to I on Bedding MaterialI.

SUDAS DIRECTOR — DESIGN METHODS ENGINEER

SEWAGE AIR RELEASE VALVE PIT

FIGURE 4010.202 SHEET 1 OF 1

1. Standard duty casting complying with AASHTO M 306. Mark lid with "Sanitary" or "Sanitary C.O."
2. Do not allow casting to bear on top of riser pipe.
3. 6 inch PVC Service Pipe
4. Threaded PVC cap or iron body ferrule with brass screw plug

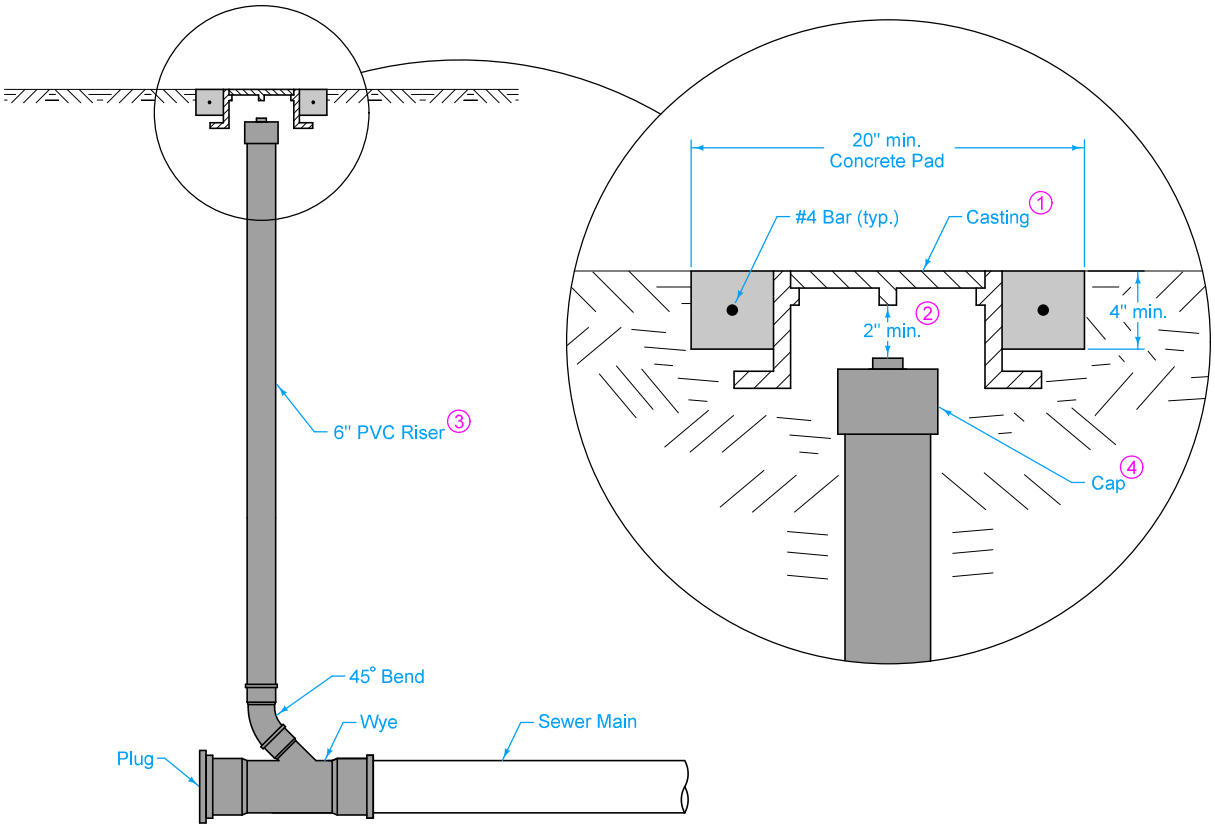

CLEANOUT

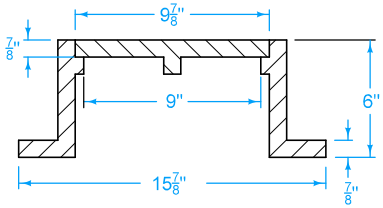

CASTING 1

(Dimensions are nominal)

SUDAS	IOWA DOT	REVISION 1 04-17-18
FIGURE 4010.203	STANDARD ROAD PLAN	SW-203 SHEET 1 of 1

REVISIONS: Replaced Iowa DOT and SUDAS logos.

Paul D. Wigand, SUDAS DIRECTOR — Brian Smith, DESIGN METHODS ENGINEER

SANITARY SEWER CLEANOUT

FIGURE 4010.203 SHEET 1 OF 1

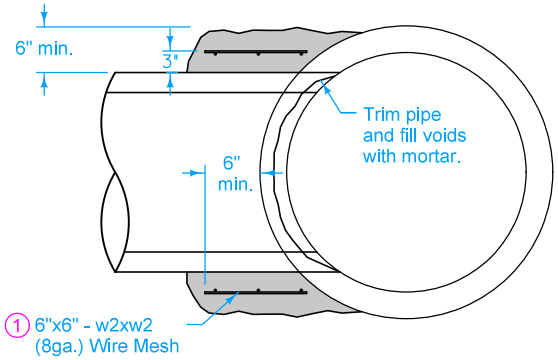

TYPE PC-1 CONCRETE COLLAR CONNECTION

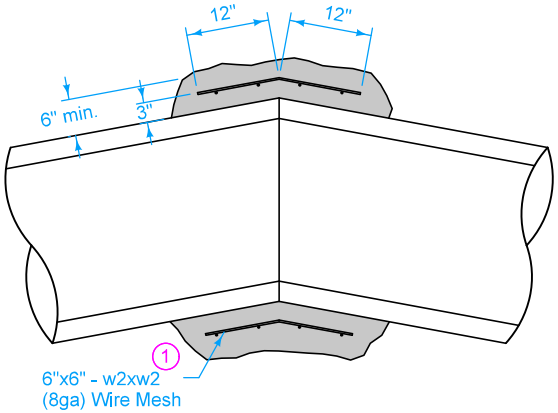

TYPE PC-2 CONCRETE COLLAR CONNECTION

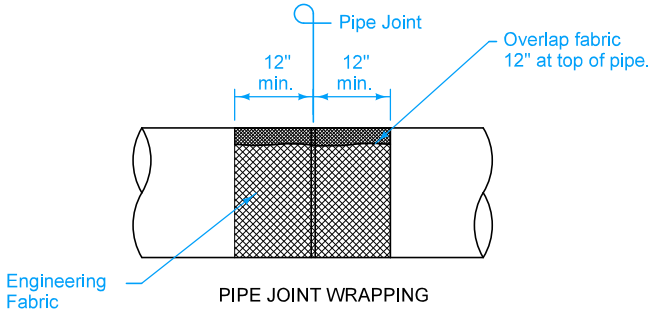

PIPE JOINT WRAPPING

PIPE TO PIPE CONNECTION

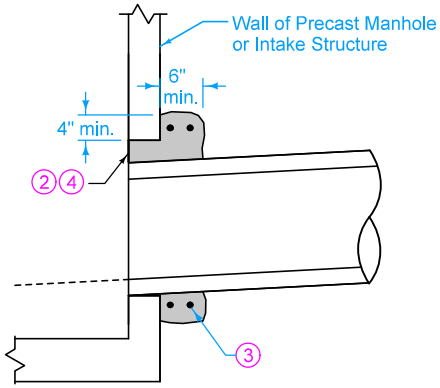

CONCRETE COLLAR FOR PIPES 12" AND SMALLER

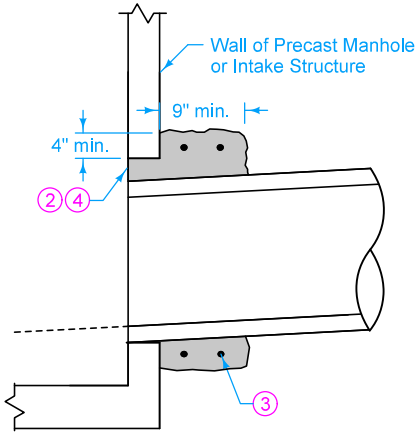

CONCRETE COLLAR FOR PIPES GREATER THAN 12"

PIPE TO STRUCTURE CONNECTION

1. Lap ends of wire mesh a minimum of 6 inches.
2. Concrete collar is required when annular space between the outside of the pipe and the wall of the structure is 2 inches or greater.
3. Provide two #4 hoop bars in concrete collar. Lap bars a minimum of 6 inches.
4. Trowel concrete flush with inside wall of structure.

SUDAS	IOWA DOT	REVISION 2 04-17-18
FIGURE 4020.211	STANDARD ROAD PLAN	SW-211 SHEET 1 of 1

REVISIONS: Removed 'Invert' callout on Pipe to Structure View. Retitled and replaced old Iowa DOT and SUDAS logos with new logos.

Paul D. Wiegand — SUDAS DIRECTOR
Brian Smith — DESIGN METHODS ENGINEER

STORM SEWER PIPE CONNECTIONS

FIGURE 4020.211 | SHEET 1 OF 1

1. For additional configurations, maintain a minimum of 12 inches of concrete between vertical edges of pipe openings.
2. 12 inch minimum riser height above all pipe openings.

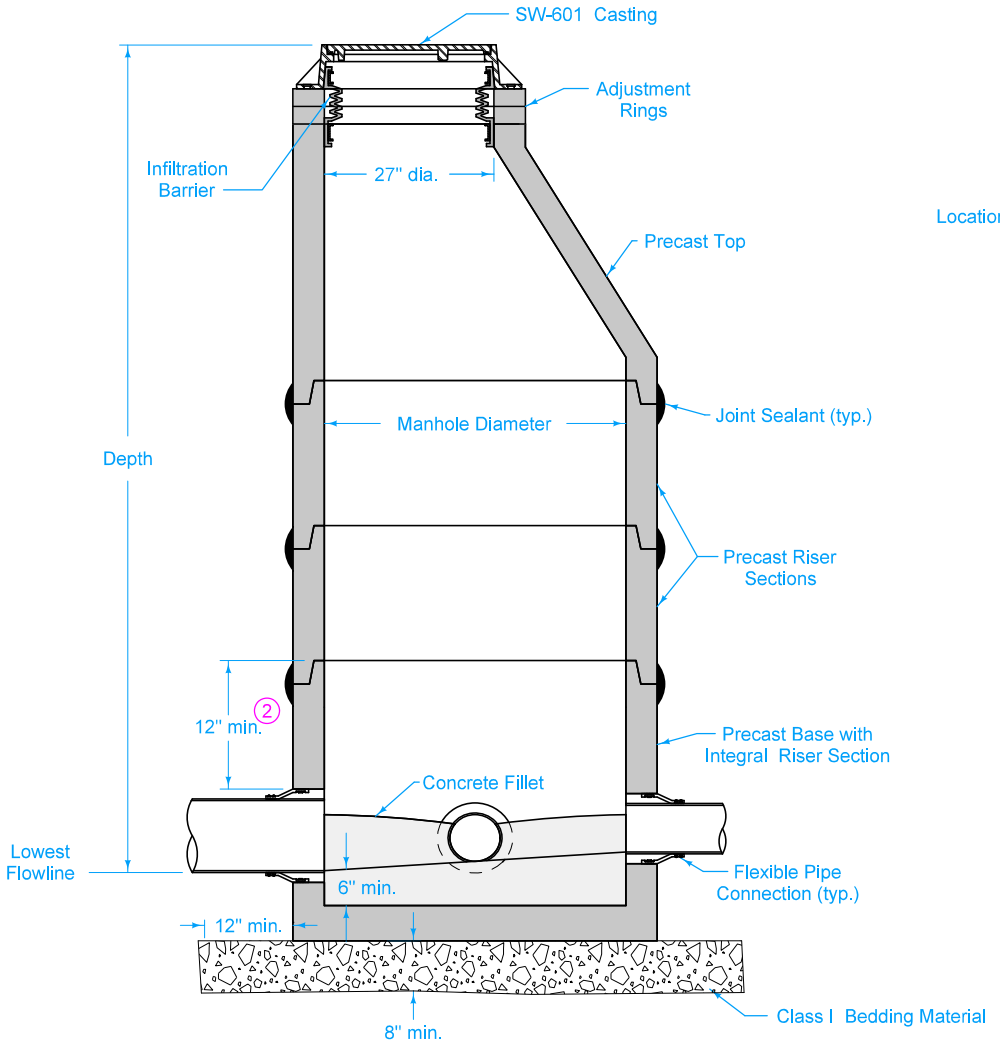

TYPICAL SECTION

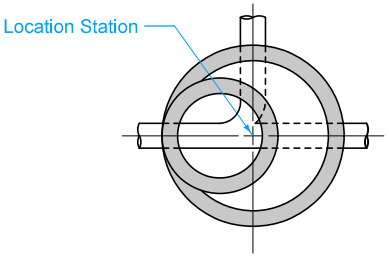

PLAN

	Maximum Pipe Diameter (inches) for 2 Pipes 1	
	At 180° Separation	At 90° Separation
48	24	18
60	36	24
72	42	30
84	48	36
96	60	42

SUDAS | IOWA DOT | REVISION 3 04-21-20

FIGURE 6010.301 | STANDARD ROAD PLAN | SW-301 | SHEET 1 of 1

REVISIONS: Changed 1 to I on Bedding Material and removed steps.

SUDAS DIRECTOR | DESIGN METHODS ENGINEER

CIRCULAR SANITARY SEWER MANHOLE

FIGURE 6010.301 SHEET 1 OF 1

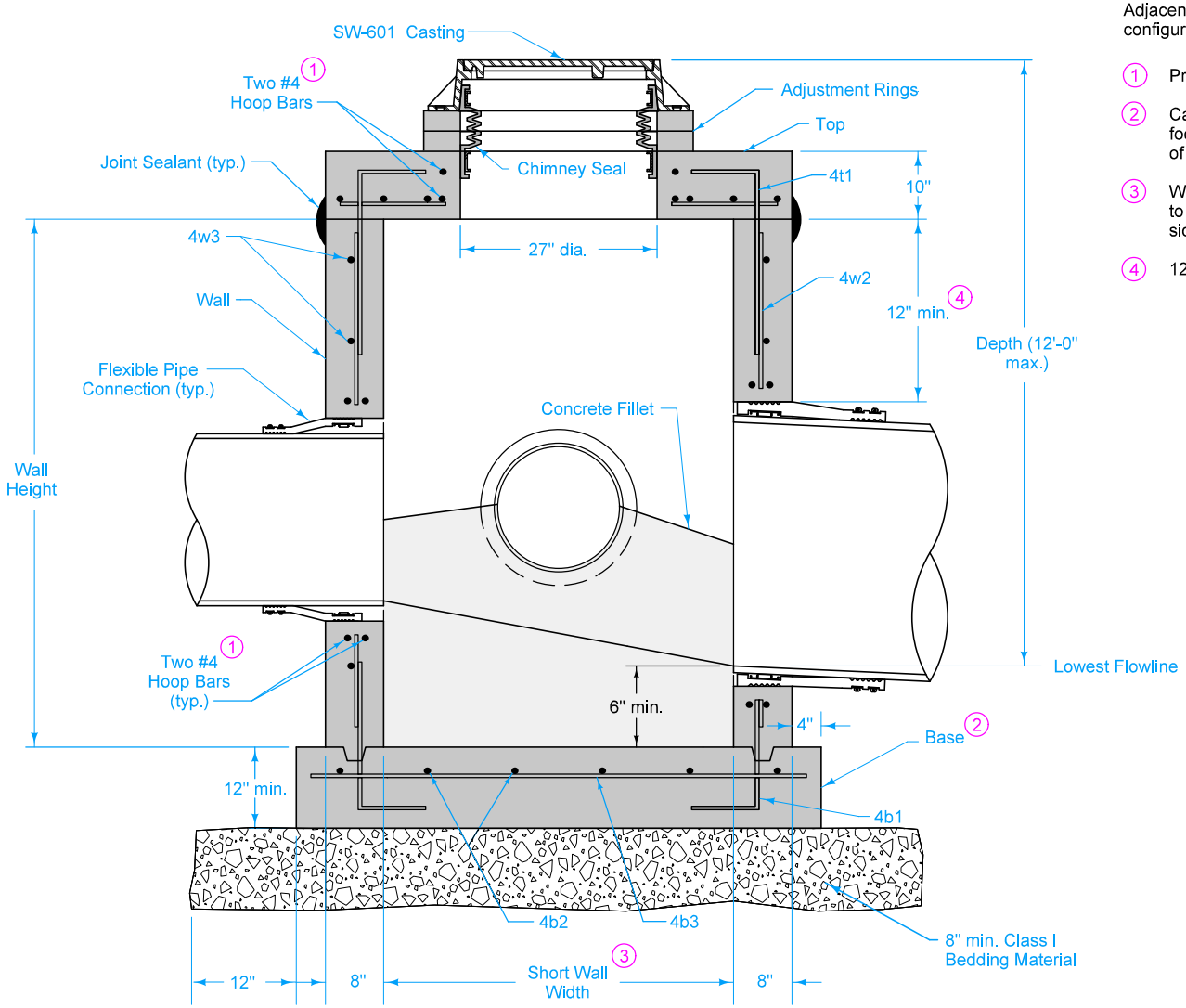

TYPICAL SECTION

Adjacent walls may have different widths based upon pipe configuration, but structure must be rectangular.

1. Provide two #4 hoop bars at top opening and at all pipe openings.
2. Cast-in-place base shown. If base is precast integral with walls, the footprint of the base is not required to extend beyond the outer edge of the walls.
3. Wall widths vary with pipe diameter and range from 4 feet minimum to 9 feet maximum. Provide 12 inches of wall width (minimum) each side of pipe opening.
4. 12 inch minimum wall height above all pipe openings.

SUDAS	IOWA DOT	REVISION 2 04-21-20
FIGURE 6010.302	STANDARD ROAD PLAN	SW-302 SHEET 1 of 2

REVISIONS: Added Class I Bedding Material.

SUDAS DIRECTOR — DESIGN METHODS ENGINEER

RECTANGULAR SANITARY SEWER MANHOLE

FIGURE 6010.302 SHEET 1 OF 2

1. Provide two #4 hoop bars at top opening and at all pipe openings.
2. Cast-in-place base shown. If base is precast integral with walls, the footprint of the base is not required to extend beyond the outer edge of the walls.
3. Wall widths vary with pipe diameter and range from 4 feet minimum to 9 feet maximum. Provide 12 inches of wall width (minimum) each side of pipe opening.

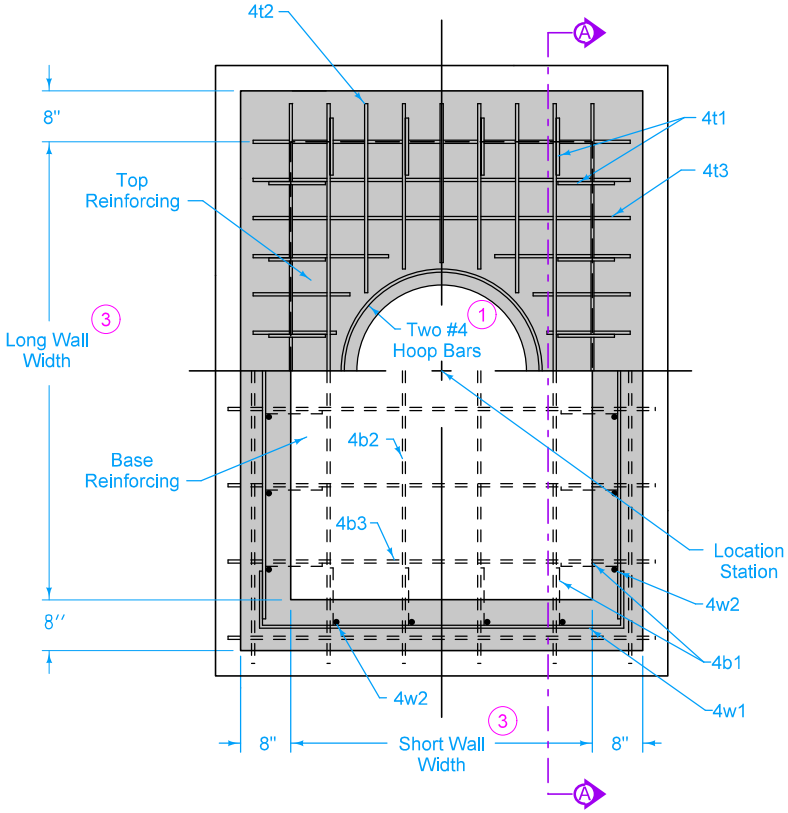

PLAN

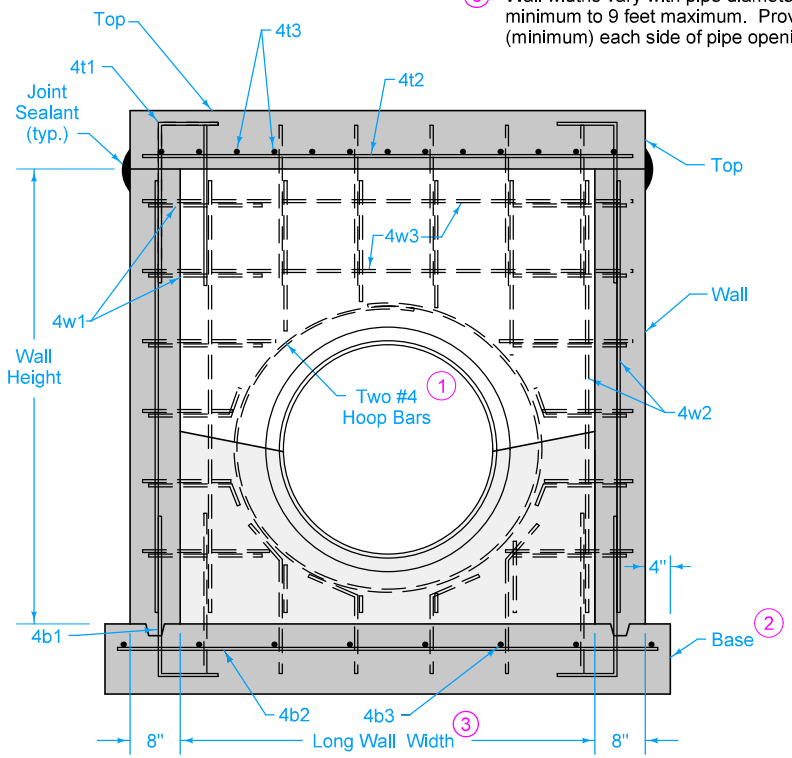

SECTION A-A

REINFORCING BAR LIST					
Mark	Size	Location	Shape	Length	Spacing
4b1	4	Base	⌋	36"	12"
4b2	4	Base	——	Long Wall plus 18"	12"
4b3	4	Base	——	Short Wall plus 18"	12"
4t1	4	Top	⌉	36"	12"
4t2	4	Top	——	Long Wall plus 12"	6"
4t3	4	Top	——	Short Wall plus 12"	6"
4w1	4	Wall	⌐⌐	Short Wall plus 48"	12"
4w2	4	Wall	——	Wall Height minus 4"	12"
4w3	4	Wall	——	Long Wall plus 12"	12"

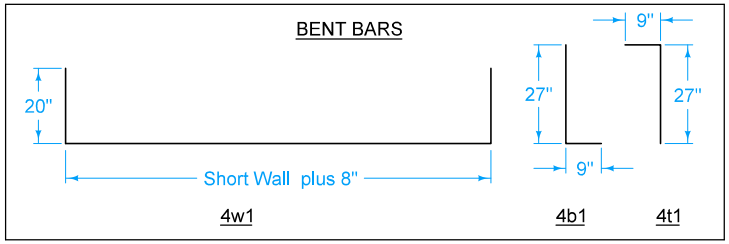

SUDAS | IOWA DOT

REVISION 2 04-21-20

FIGURE 6010.302 | STANDARD ROAD PLAN | SW-302

SHEET 2 of 2

REVISIONS: Added Class I Bedding Material.

SUDAS DIRECTOR | DESIGN METHODS ENGINEER

RECTANGULAR SANITARY SEWER MANHOLE

FIGURE 6010.302 SHEET 2 OF 2

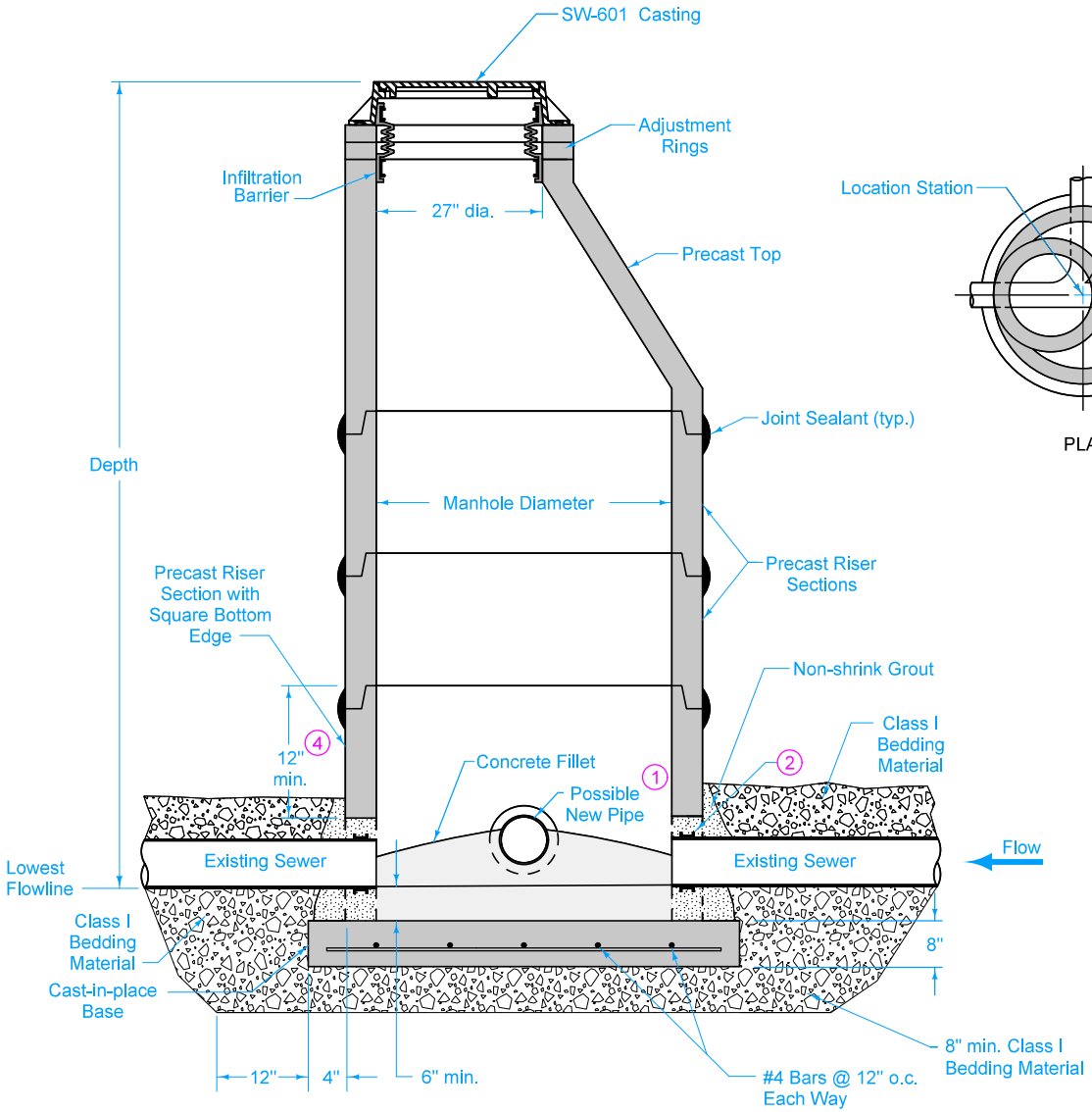

TYPICAL SECTION

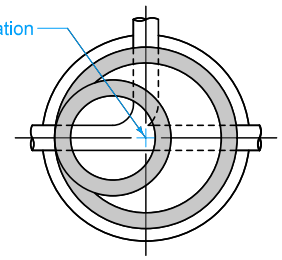

PLAN

1. For new pipe connections, provide cored opening with flexible pipe connector.
2. For existing pipe connections, provide an arched opening with a diameter up to 6 inches larger than outside diameter of pipe. Install waterstop around existing pipe. Fill void between pipe and opening with non-shrink grout.
3. For additional configurations, maintain a minimum of 12 inches of concrete between vertical edges of pipe openings.
4. 12 inch minimum riser height above all pipe openings.

Manhole Diameter (inches)	Maximum Pipe Diameter (inches) for 2 Pipes (3)	
	At 180° Separation	At 90° Separation
48	24	18
60	36	24
72	42	30
84	48	36
96	60	42

SUDAS | IOWA DOT

REVISION 3 04-21-20

FIGURE 6010.303 | STANDARD ROAD PLAN | SW-303

SHEET 1 of 1

REVISIONS: Added Class I Bedding Material and removed steps.

SUDAS DIRECTOR | DESIGN METHODS ENGINEER

SANITARY SEWER MANHOLE OVER EXISTING SEWER

FIGURE 6010.303 SHEET 1 OF 1

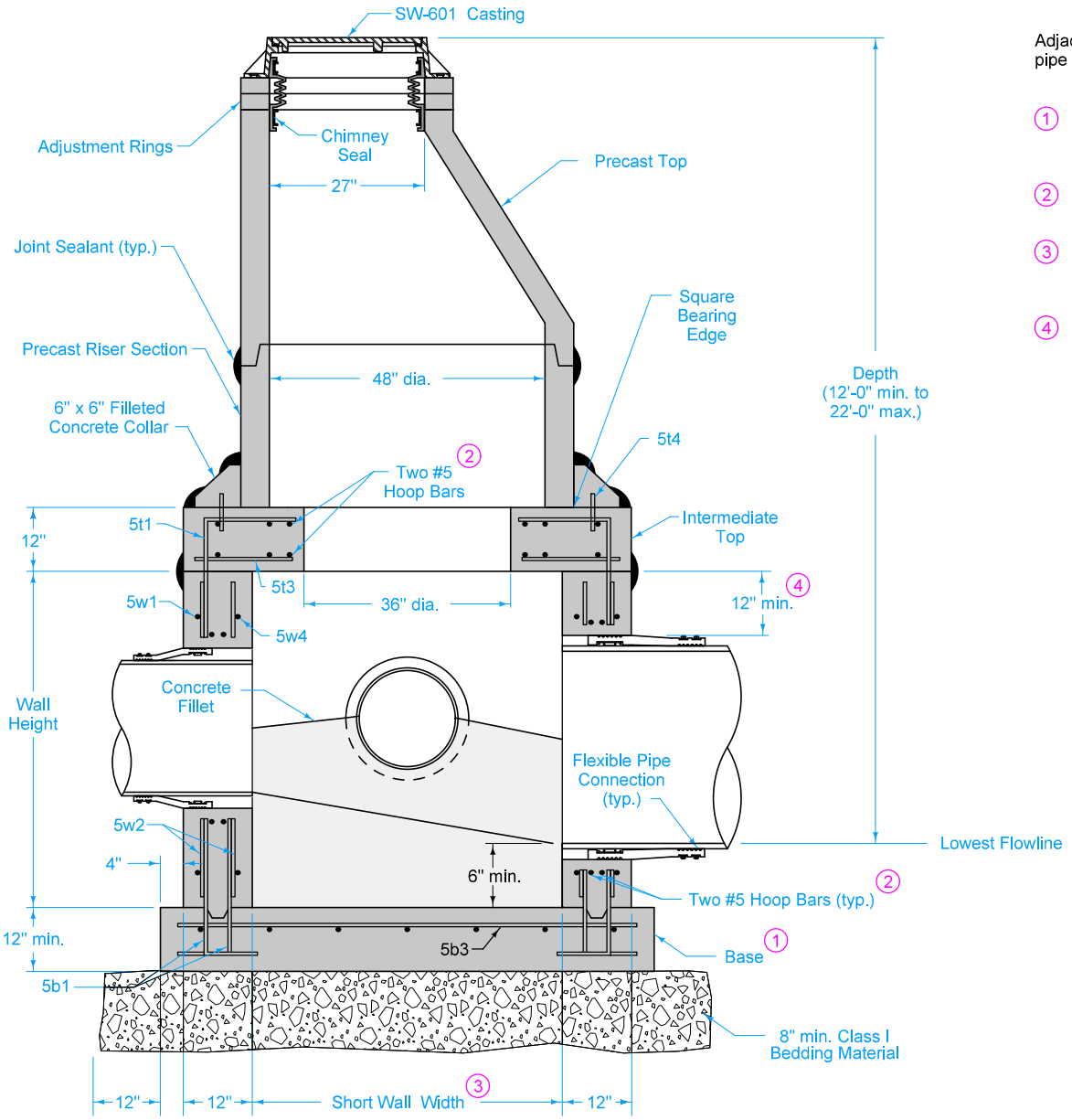

TYPICAL SECTION

Adjacent walls may have different widths based upon pipe configuration, but structure must be rectangular.

1. Cast-in-place base shown. If base is precast integral with walls, the footprint of the base is not required to extend beyond the outer edge of the walls.
2. Provide two #5 hoop bars at intermediate top opening and at all pipe openings.
3. Wall widths vary with pipe diameter and range from 4 feet minimum to 12 feet maximum. Provide 12 inches of wall width (minimum) each side of pipe opening.
4. 12 inch minimum wall height above all pipe openings.

FIGURE 6010.304 SHEET 1 OF 2

SUDAS | IOWA DOT

REVISION	
3	04-21-20

FIGURE 6010.304 | STANDARD ROAD PLAN | SW-304 | SHEET 1 of 2

REVISIONS: Added Class I Bedding Material and removed steps.

Paul D. Wiegand — SUDAS DIRECTOR
Stuart Nielsen — DESIGN METHODS ENGINEER

RECTANGULAR BASE/ CIRCULAR TOP SANITARY SEWER MANHOLE

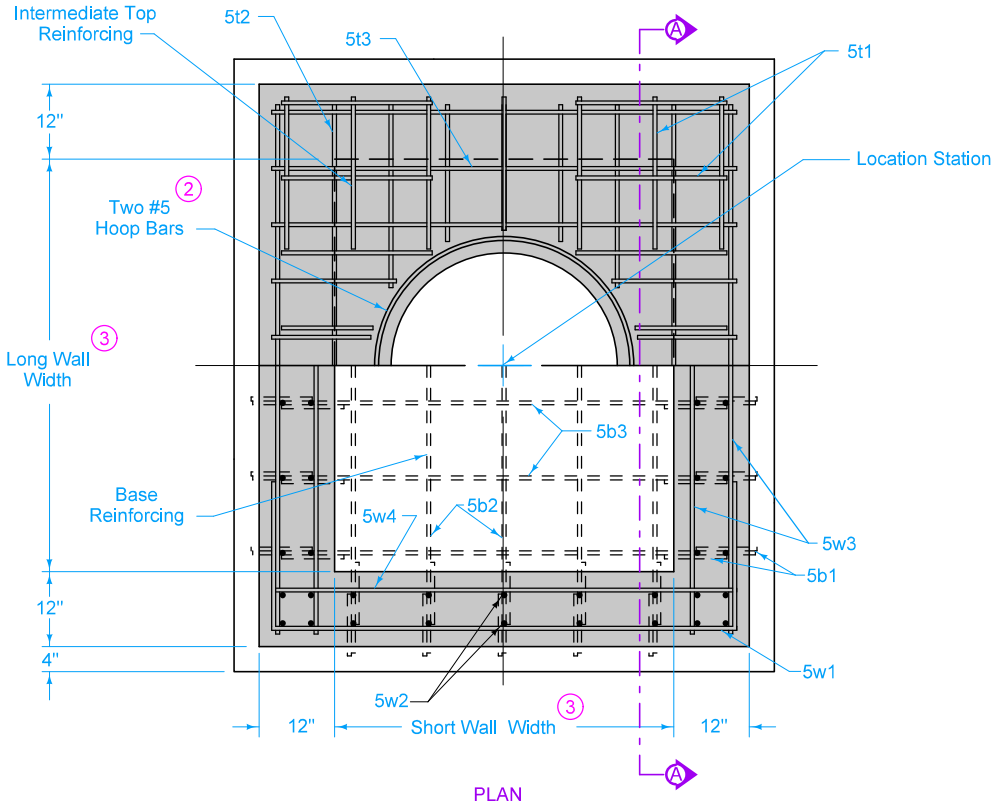

PLAN

2 Provide two #5 hoop bars at intermediate top opening and at all pipe openings.

3 Wall widths vary with pipe diameter and range from 4 feet minimum to 12 feet maximum. Provide 12 inches of wall opening (minimum) each side of pipe opening.

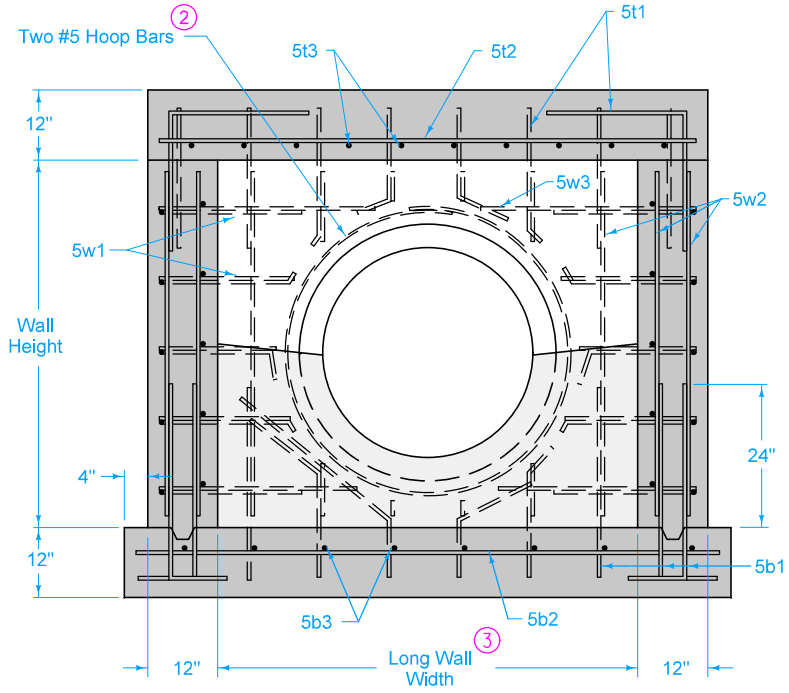

SECTION A-A

REINFORCING BAR LIST					
Mark	Size	Location	Shape	Length	Spacing
5t1	5	Top		48"	12"
5t2	5	Top		Long Wall plus 20"	9"
5t3	5	Top		Short Wall plus 20"	9"
5t4	5	Top		8"	12"
5b1	5	Base		43"	12"
5b2	5	Base		Long Wall plus 26"	12"
5b3	5	Base		Short Wall plus 26"	12"
5w1	5	Top		Short Wall plus 68"	12"
5w2	5	Top		Wall Height minus 4"	12"
5w3	5	Top		Long Wall plus 20"	12"
5w4	5	Top		Short Wall plus 20"	12"

BENT BARS

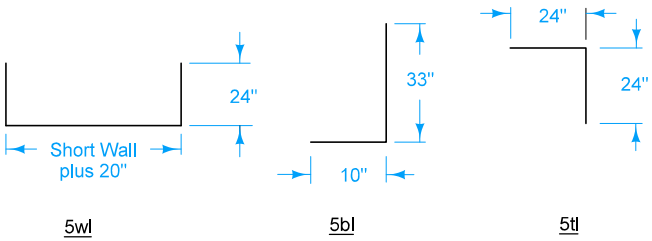

SUDAS	IOWA DOT	REVISION 3 04-21-20
FIGURE 6010.304	STANDARD ROAD PLAN	SW-304 SHEET 2 of 2

REVISIONS: Added Class I Bedding Material and removed steps.

SUDAS DIRECTOR — DESIGN METHODS ENGINEER

RECTANGULAR BASE/ CIRCULAR TOP SANITARY SEWER MANHOLE

FIGURE 6010.304 SHEET 2 OF 2

(1) For sewer pipes less than 48 inches in diameter, install eccentric reducers/increasers with a standard tee or utilize a composite tee.

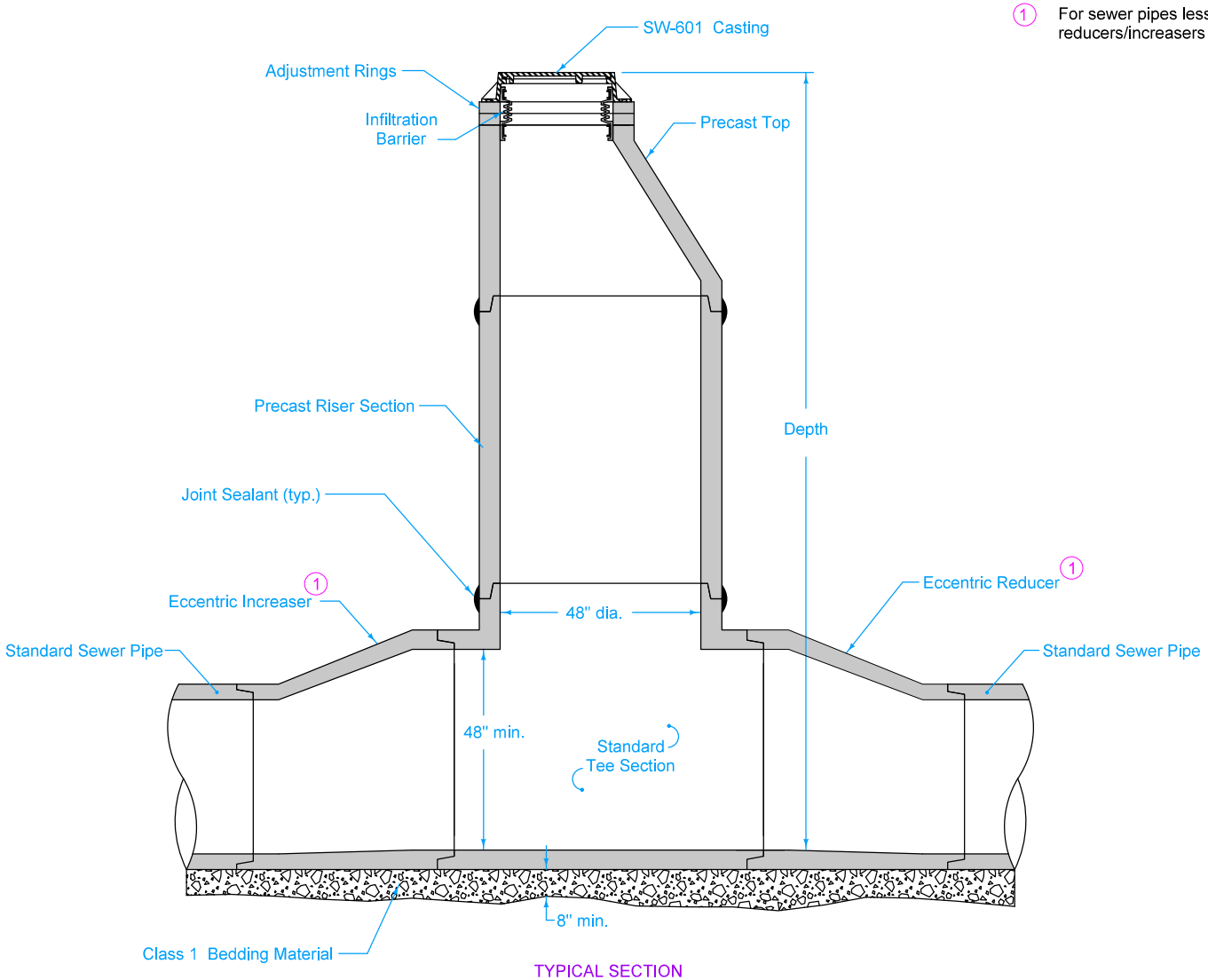

TYPICAL SECTION

STANDARD TEE (1)

FIGURE 6010.305 SHEET 1 OF 2

SUDAS	IOWA DOT	REVISION 2 04-21-20
FIGURE 6010.305	STANDARD ROAD PLAN	SW-305 SHEET 1 of 2

REVISIONS: Added Class I Bedding Material and removed steps.

SUDAS DIRECTOR — DESIGN METHODS ENGINEER

TEE-SECTION
SANITARY SEWER MANHOLE

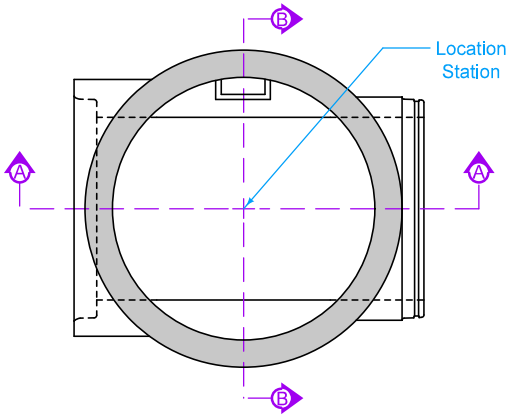

PLAN

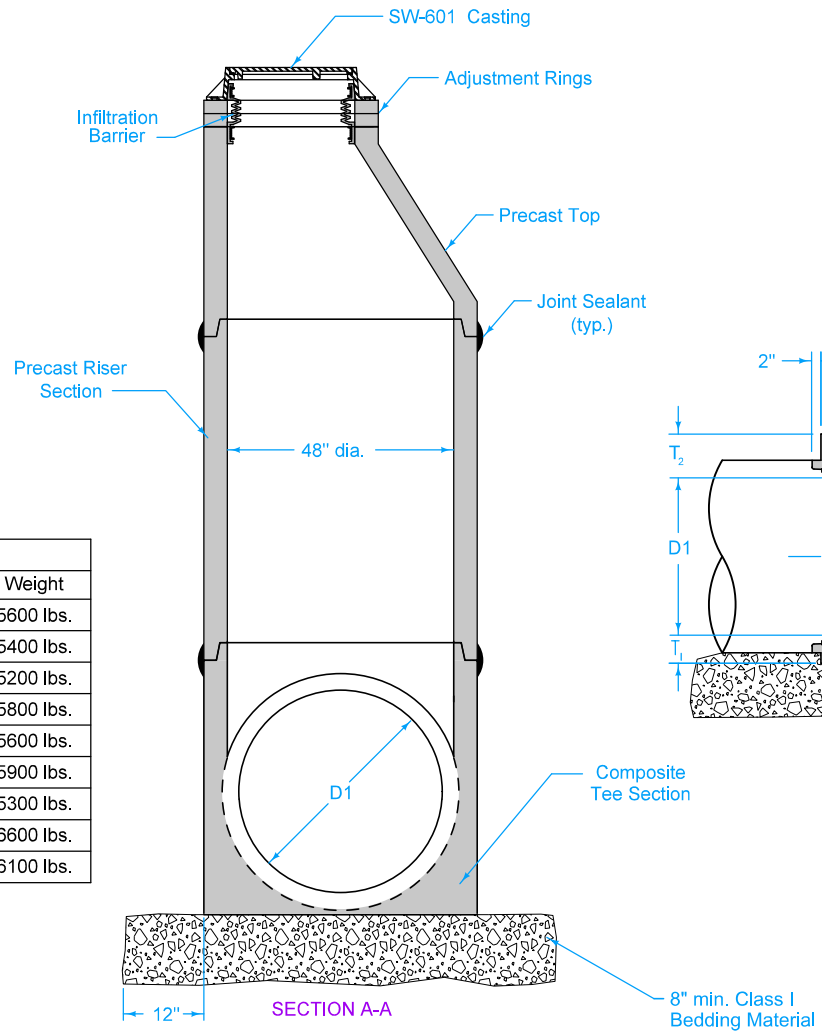

SECTION A-A

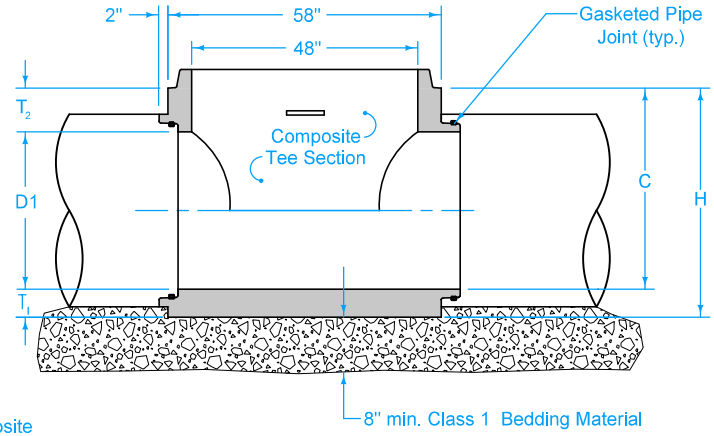

SECTION B-B

COMPOSITE TEE DIMENSIONS						
Size	D1	H	T_1	T_2	C	Weight
48" on 12"	12"	50"	$8\frac{1}{2}$"	$29\frac{1}{2}$"	$41\frac{1}{2}$"	5600 lbs.
48" on 15"	15"	50"	7"	28"	43"	5400 lbs.
48" on 18"	18"	50"	$5\frac{1}{2}$"	$26\frac{1}{2}$"	$44\frac{1}{2}$"	5200 lbs.
48" on 21"	21"	48"	$9\frac{1}{2}$"	$17\frac{1}{2}$"	$38\frac{1}{2}$"	5800 lbs.
48" on 24"	24"	48"	8"	16"	40"	5600 lbs.
48" on 27"	27"	48"	$9\frac{1}{2}$"	$11\frac{1}{2}$"	$38\frac{1}{2}$"	5900 lbs.
48" on 30"	30"	48"	8"	10"	40"	5300 lbs.
48" on 33"	33"	54"	$9\frac{1}{2}$"	$11\frac{1}{2}$"	$44\frac{1}{2}$"	6600 lbs.
48" on 36"	36"	54"	8"	10"	46"	6100 lbs.

COMPOSITE TEE

Alternate to standard tee with eccentric reducer (for pipes 36" and smaller).

FIGURE 6010.305 SHEET 2 OF 2

SUDAS | IOWA DOT

REVISION 2 4-21-20

FIGURE 6010.305 | STANDARD ROAD PLAN | SW-305

SHEET 2 of 2

REVISIONS: Added Class I Bedding Material and removed steps.

SUDAS DIRECTOR | DESIGN METHODS ENGINEER

TEE-SECTION
SANITARY SEWER MANHOLE

CHIMNEY SEALS FOR 2-PIECE CASTINGS

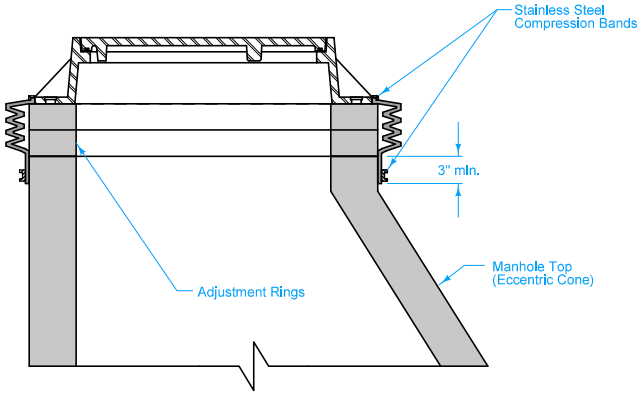

EXTERNAL SEAL

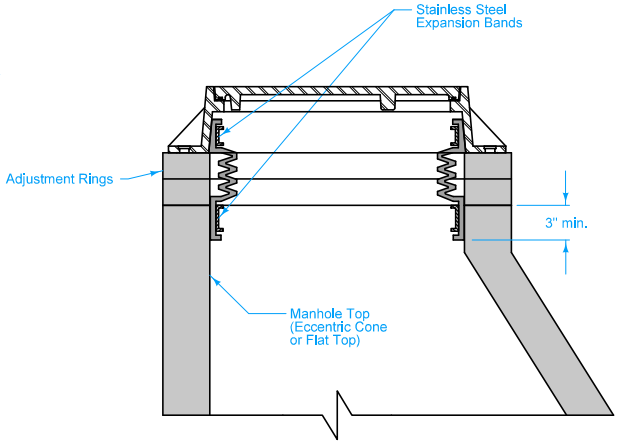

INTERNAL SEAL

CHIMNEY SEALS FOR 3-PIECE CASTINGS

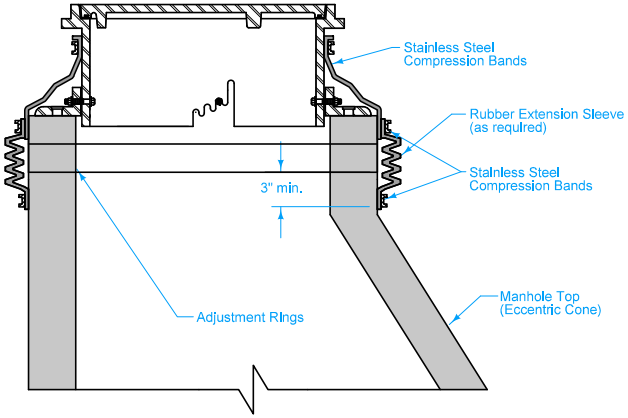

EXTERNAL SEAL

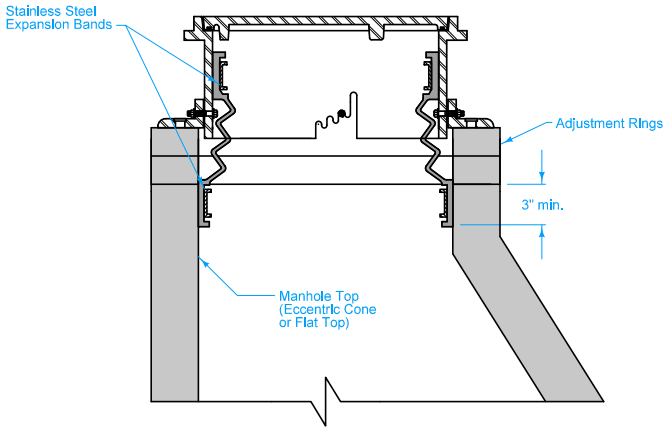

INTERNAL SEAL

FIGURE 6010.306 SHEET 1 OF 1

		REVISION	
SUDAS	IOWA DOT	1	04-21-15
FIGURE 6010.306	STANDARD ROAD PLAN	SW-306	
		SHEET 1 of 1	

REVISIONS: Revised 3-piece casting configuration.

Paul D. Wigand — SUDAS DIRECTOR
Brian Smith — DESIGN METHODS ENGINEER

CHIMNEY SEALS FOR SANITARY SEWER MANHOLES

Construct drop and overflow from ductile iron pipe of same diameter specified for sewer main. Provide mechanical joints for all ductile iron pipe and fittings.

1. Place Class I bedding material, CLSM, flowable mortar, or concrete from top of elbow to bottom of sewer main.

2. Encase elbow in concrete. 12 inches minimum on all sides.

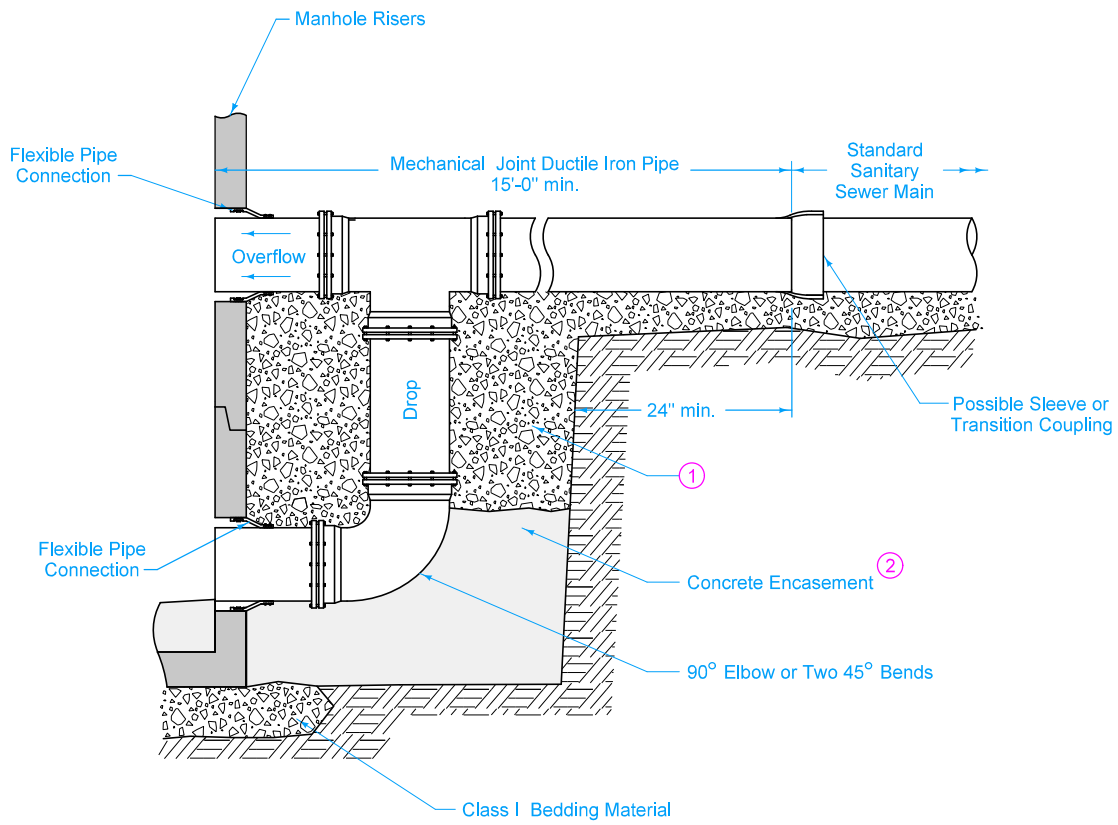

SUDAS	IOWA DOT	REVISION 2 04-21-20
FIGURE 6010.307	STANDARD ROAD PLAN	SW-307 SHEET 1 of 1

REVISIONS: Changed 1 to I on Bedding Material in Note 1. Added EXTERNAL to title.

SUDAS DIRECTOR — DESIGN METHODS ENGINEER

EXTERNAL DROP CONNECTION FOR SANITARY SEWER MANHOLE

FIGURE 6010.307 SHEET 1 OF 1

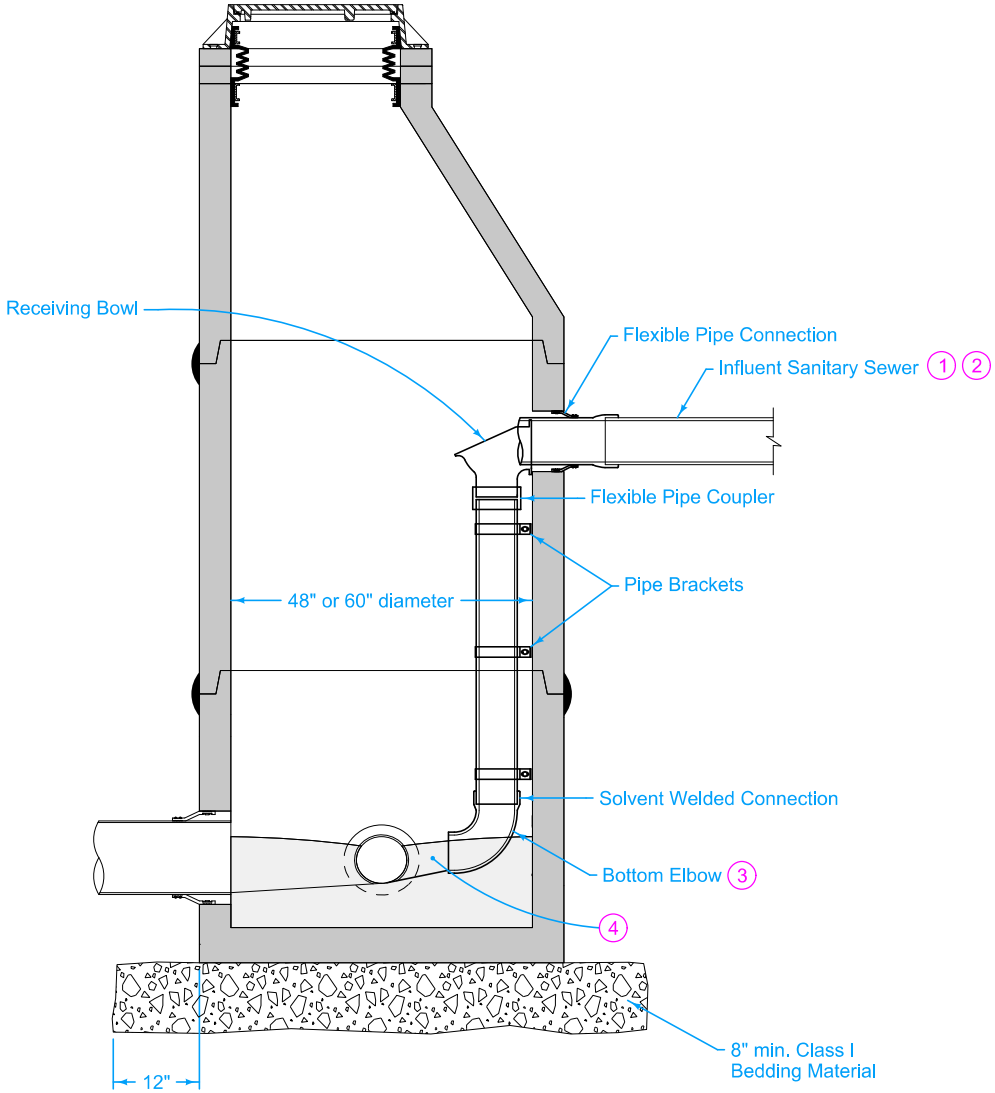

1. Core drill openings at least 12 inches from existing manhole joints.
2. Install flexible pipe coupler or pipe joint on new sanitary sewer 18 to 24 inches from outside of manhole wall.
3. Align elbow so discharge is directed at outlet pipe or at 45 degrees to manhole flow.
4. Reshape fillet to provide a smooth transition and to direct flow to outlet.

SUDAS	IOWA DOT	REVISION	
		New	04-21-20
FIGURE 6010.308	STANDARD ROAD PLAN	SW-308	
		SHEET 1 of 1	

REVISIONS: New.

Paul D. Wigand — SUDAS DIRECTOR
Stuart Nielsen — DESIGN METHODS ENGINEER

INTERNAL DROP CONNECTION FOR SANITARY SEWER MANHOLE

FIGURE 6010.308 | SHEET 1 OF 1

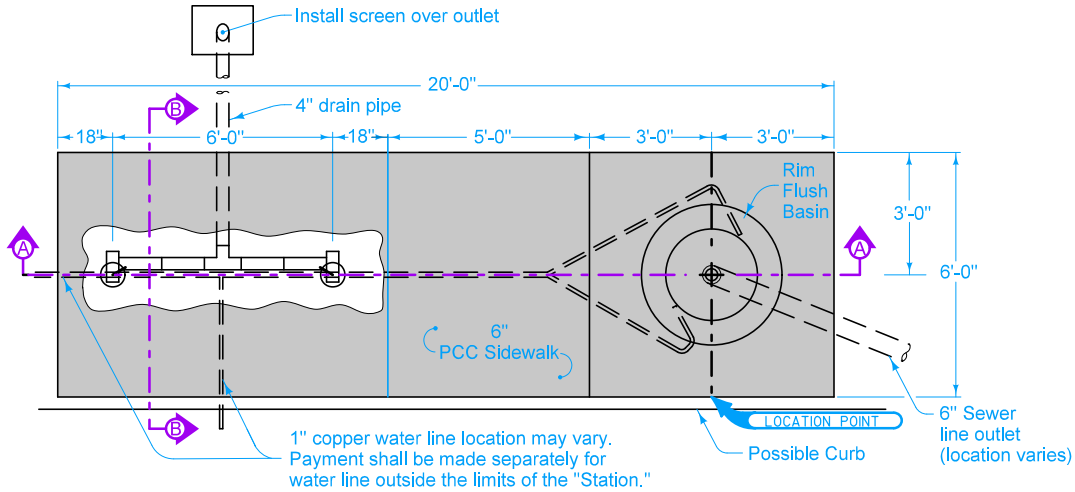

PLAN

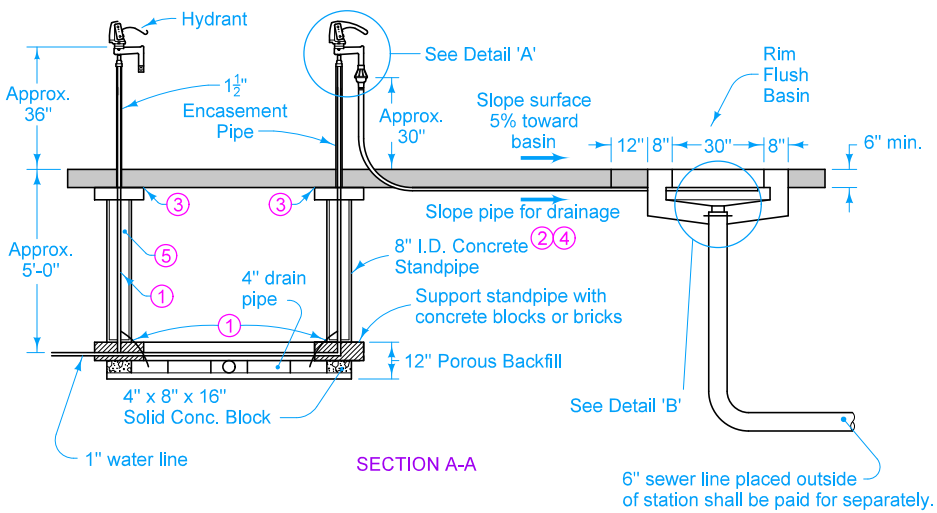

SECTION A-A

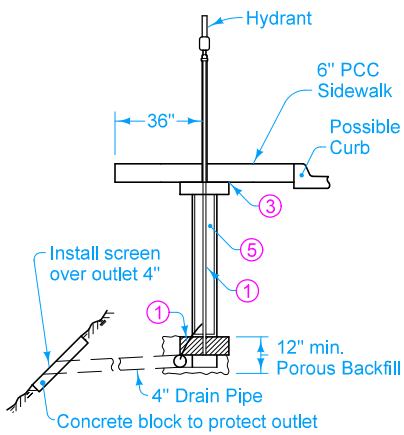

SECTION B-B

Install hydrants that are a combination freezeless and standard operating units or freezeless and self-closing (as designated on the plans), of a design and construction approved by the Engineer and equipped with approved model accessory attachment as indicated. Install riser pipe for hydrants that is one inch I.D. galvanized water pipe.

After the water line (to the last hydrant on the line) has been placed and inspected, test the line under 100 pounds per square inch of air pressure with soap and water (or other proven means) to ensure the line is free of leaks. Maintain such pressure for 24 hours. Upon successful completion of inspection and testing, return excavated material to the trench and tamp. Install either type "K" copper or galvanized pipe water lines for rim flush basin.

The Contracting Authority will furnish advisory signs and a single 4 inch x 4 inch post. Mount signs back-to-back on the post. The Engineer will determine the exact location at the time of installation.

Details shown for hatch cover are typical. Install a self-closing cast bronze type of a design and construction approved by the Engineer and with a handle shaped to ensure self-closing feature.

1. Copper tube connection. Place hydrant drain a minimum of 2 inches above porous backfill to ensure proper operation.
2. Position 8 inch I.D. Standpipe so that no damage will result to the normal operation of water lines and drain tile located in the immediate vicinity.
3. Block standpipe to prevent concrete from entering pipe during construction of slab.
4. Ensure inside of standpipe is void of material.
5. 4 inch cast iron threaded base with bronze cover and handle and provisions for locking. VAREC 42 Series Hatch or approved equivalent.

IOWA DOT

STANDARD ROAD PLAN

REVISION	
1	04-17-18

SW-350

SHEET 1 of 2

REVISIONS: Replaced logo. Modified general notes. Modified note 5 to change "model 41" to "Series 42 Hatch or equivalent".

Brian Smith
APPROVED BY DESIGN METHODS ENGINEER

TRAVEL TRAILER DUMP STATION

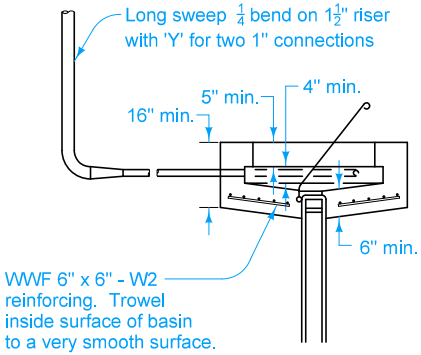

TYPICAL SECTION

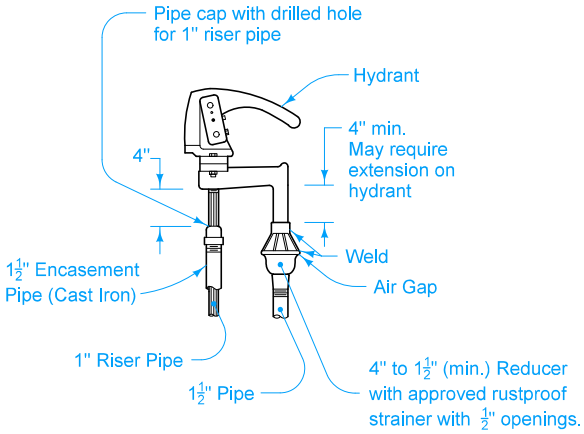

DETAIL 'A'

(Facing Traffic) (Facing Facility)

ADVISORY SIGNS

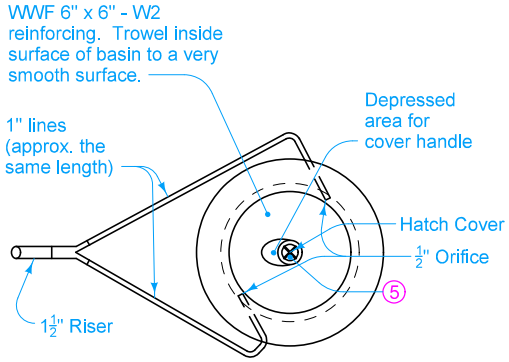

PLAN

RIM FLUSH BASIN

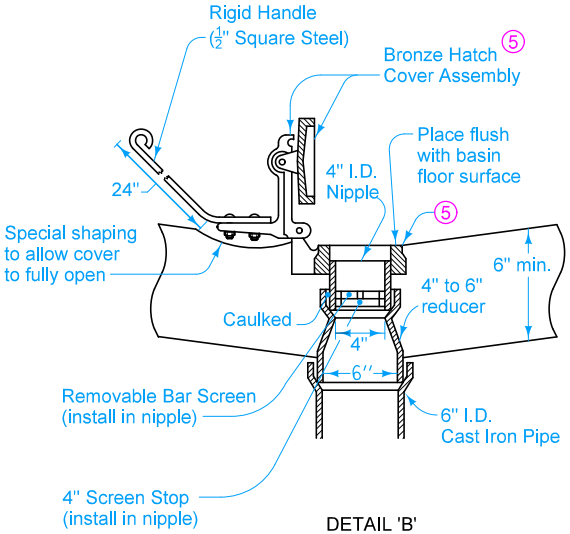

DETAIL 'B'

5 4 inch cast iron threaded base with bronze cover and handle and provisions for locking. VAREC 42 Series Hatch or approved equivalent.

IOWA DOT

STANDARD ROAD PLAN

REVISION	
1	04-17-18

SW-350

SHEET 2 of 2

REVISIONS: Replaced logo. Modified general notes.

Brian Smith
APPROVED BY DESIGN METHODS ENGINEER

TRAVEL TRAILER DUMP STATION

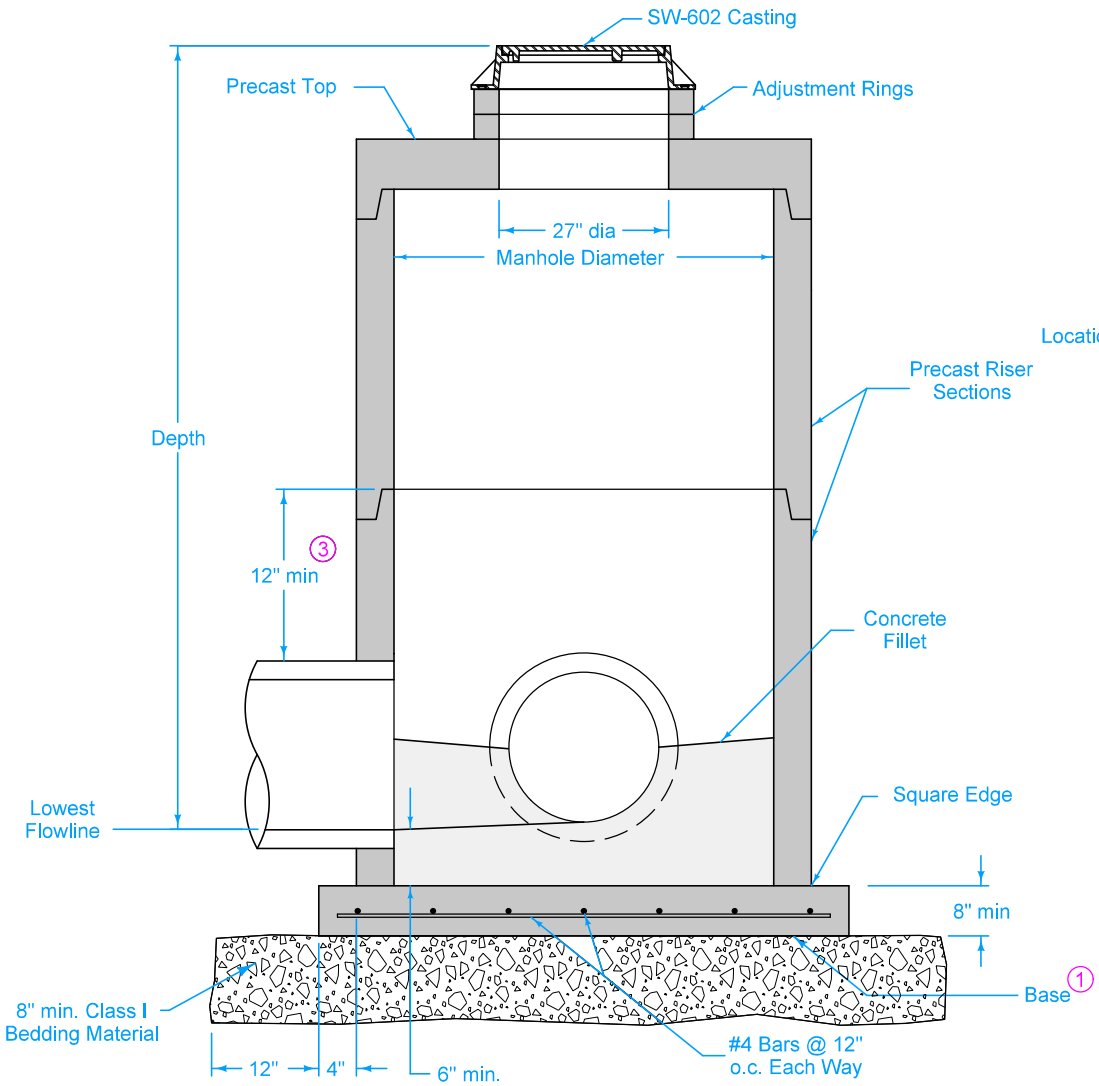

TYPICAL SECTION

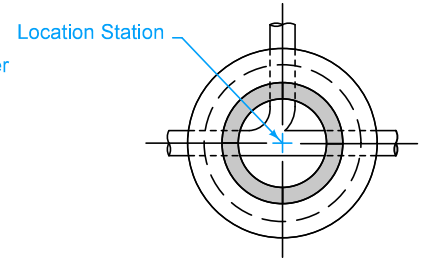

PLAN

1. Cast-in-place base shown. If base is precast integral with bottom riser, the footprint of the base is not required to extend beyond the outer edge of the riser.
2. For additional configurations, maintain a minimum of 12 inches of concrete between vertical edges of pipe openings.
3. 12 inch minimum riser height above all pipe openings.

Manhole Diameter (inches)	Maximum Pipe Diameter (inches) for 2 Pipes (2)	
	At 180° Separation	At 90° Separation
48	24	18
60	36	24
72	42	30
84	48	36
96	60	42

SUDAS | IOWA DOT | REVISION 2 04-21-20

FIGURE 6010.401 | STANDARD ROAD PLAN | SW-401 | SHEET 1 of 1

REVISIONS: Added Class I Bedding Material and removed steps.

SUDAS DIRECTOR | DESIGN METHODS ENGINEER

CIRCULAR STORM SEWER MANHOLE

FIGURE 6010.401 SHEET 1 OF 1

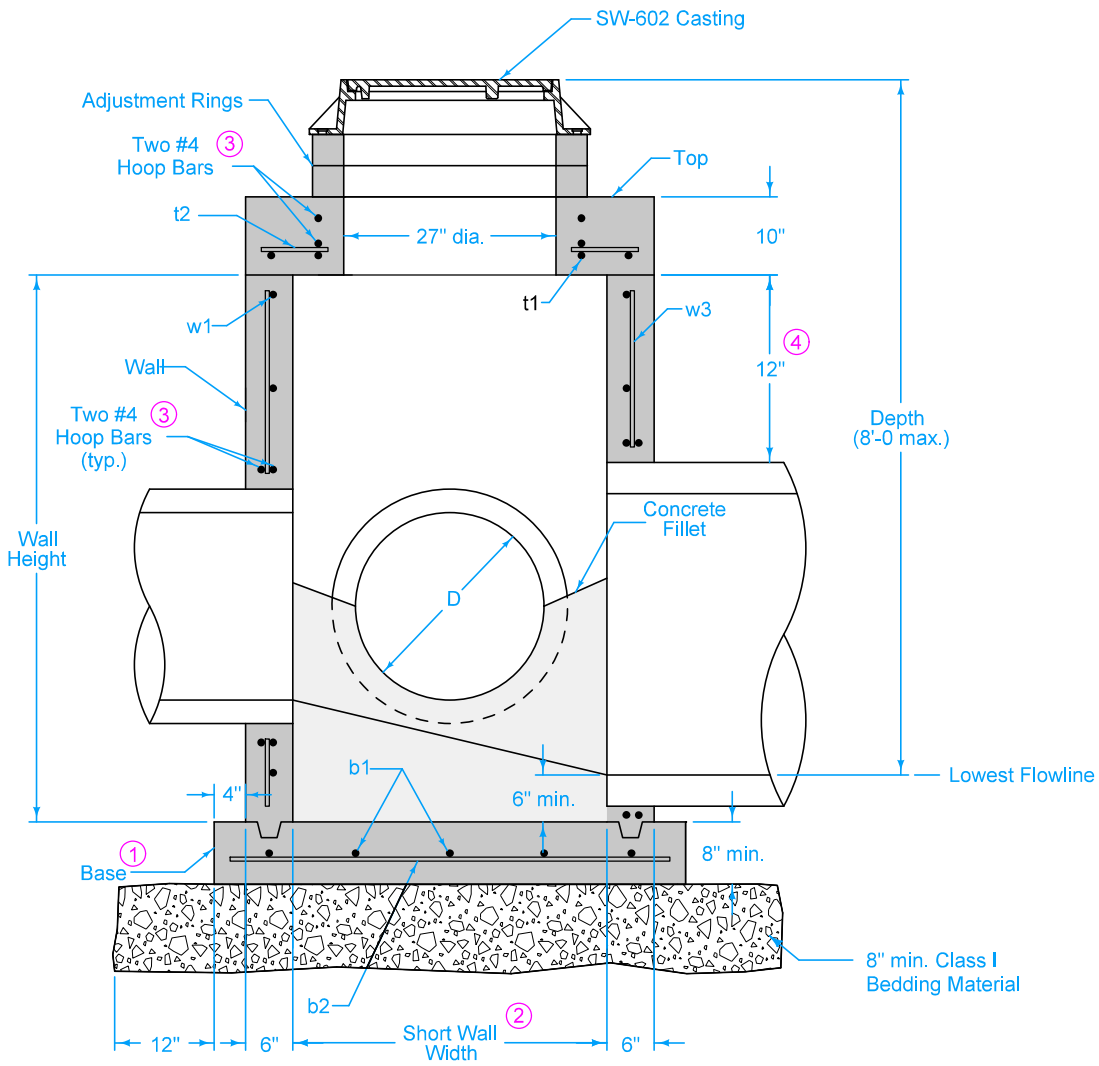

TYPICAL SECTION

Adjacent walls may have different widths based upon pipe configuration, but structure must be rectangular.

① Cast-in-place base shown. If base is precast integral with walls, the footprint of the base is not required to extend beyond the outer edge of the walls.

② Wall widths vary with pipe diameter and range from 40 inches minimum to 77 inches maximum. Provide 6 inches of wall width (minimum) each side of pipe opening.

③ Provide two #4 hoop bars at top opening and at all pipe openings.

④ 12 inch minimum wall height above all pipes.

SUDAS	IOWA DOT	REVISION 2 04-21-20
FIGURE 6010.402	STANDARD ROAD PLAN	SW-402 SHEET 1 of 2

REVISIONS: Added Class I Bedding Material.

SUDAS DIRECTOR — DESIGN METHODS ENGINEER

RECTANGULAR STORM SEWER MANHOLE

FIGURE 6010.402 SHEET 1 OF 2

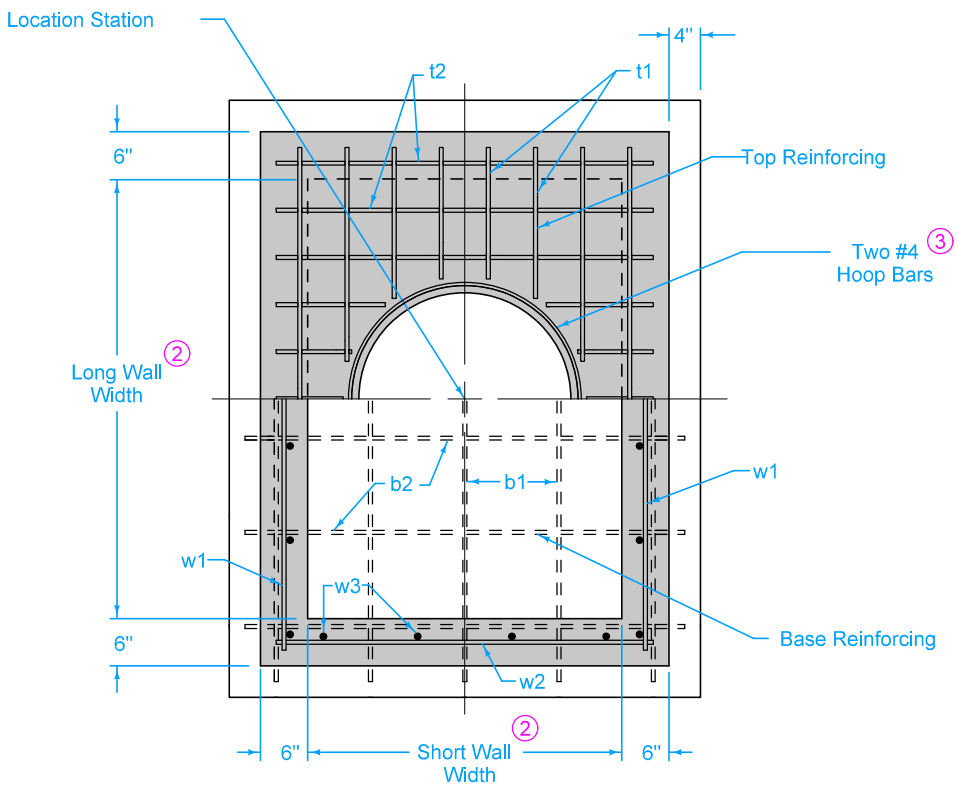

PLAN

② Wall widths vary with pipe diameter and range from 40" minimum to 77" maximum. Provide 6" of wall width (minimum) each side of pipe opening.

③ Provide two #4 hoop bars at top opening and at all pipe openings.

REINFORCING BAR LIST					
Mark	Size	Location	Shape	Length	Spacing
t1	See Table	Top	——	Long Wall plus 8"	6"
t2	See Table	Top	——	Short Wall plus 8"	6"
b1	See Table	Base	——	Long Wall plus 14"	12"
b2	See Table	Base	——	Short Wall plus 14"	12"
w1	See Table	Walls	——	Long Wall plus 8"	12"
w2	See Table	Walls	——	Short Wall plus 8"	12"
w3	See Table	Walls	——	Wall Height minus 4"	12"

Diameter of Largest Pipe, D	Minimum Bar Size
48" or 54"	6
33" to 42"	5
30" or smaller	4

SUDAS | IOWA DOT | REVISION 2 04-21-20

FIGURE 6010.402 | STANDARD ROAD PLAN | SW-402

SHEET 2 of 2

REVISIONS: Added Class I Bedding Material.

SUDAS DIRECTOR | DESIGN METHODS ENGINEER

RECTANGULAR STORM SEWER MANHOLE

FIGURE 6010.402 SHEET 2 OF 2

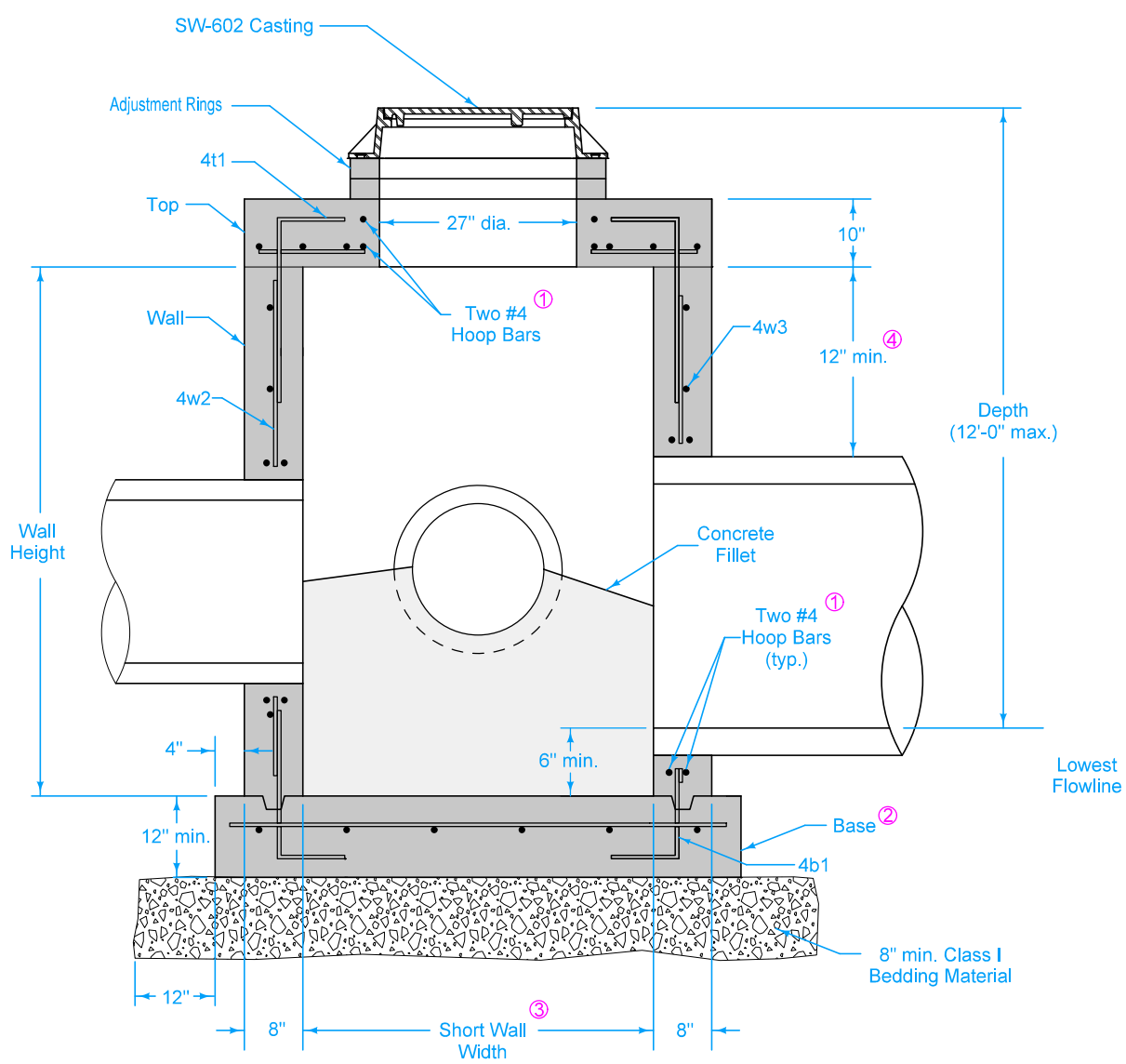

TYPICAL SECTION

Adjacent walls may have different widths based upon pipe configuration, but structure must be rectangular.

① Provide two #4 hoop bars at top opening and at all pipe openings.

② Cast-in-place base shown. If base is precast integral with walls, the footprint of the base is not required to extend beyond the outer edge of the walls.

③ Wall widths vary with pipe diameter and range from 4 feet minimum to 9 feet maximum. Provide 12 inches of wall width (minimum) each side of pipe opening.

④ 12 inch minimum wall height above all pipes.

SUDAS	IOWA DOT	REVISION 2 04-21-20
FIGURE 6010.403	STANDARD ROAD PLAN	SW-403 SHEET 1 of 2

REVISIONS: Added Class I Bedding Material.

SUDAS DIRECTOR — DESIGN METHODS ENGINEER

DEEP WELL RECTANGULAR STORM SEWER MANHOLE

FIGURE 6010.403 SHEET 1 OF 2

① Provide two #4 hoop bars at top opening and at all pipe openings.

② Cast-in-place base shown. If base is precast integral with walls, the footprint of the base is not required to extend beyond the outer edge of walls.

③ Wall widths vary with pipe diameter and range from 4 feet minimum to 9 feet maximum. Provide 12 inches of wall width (minimum) each side of pipe opening.

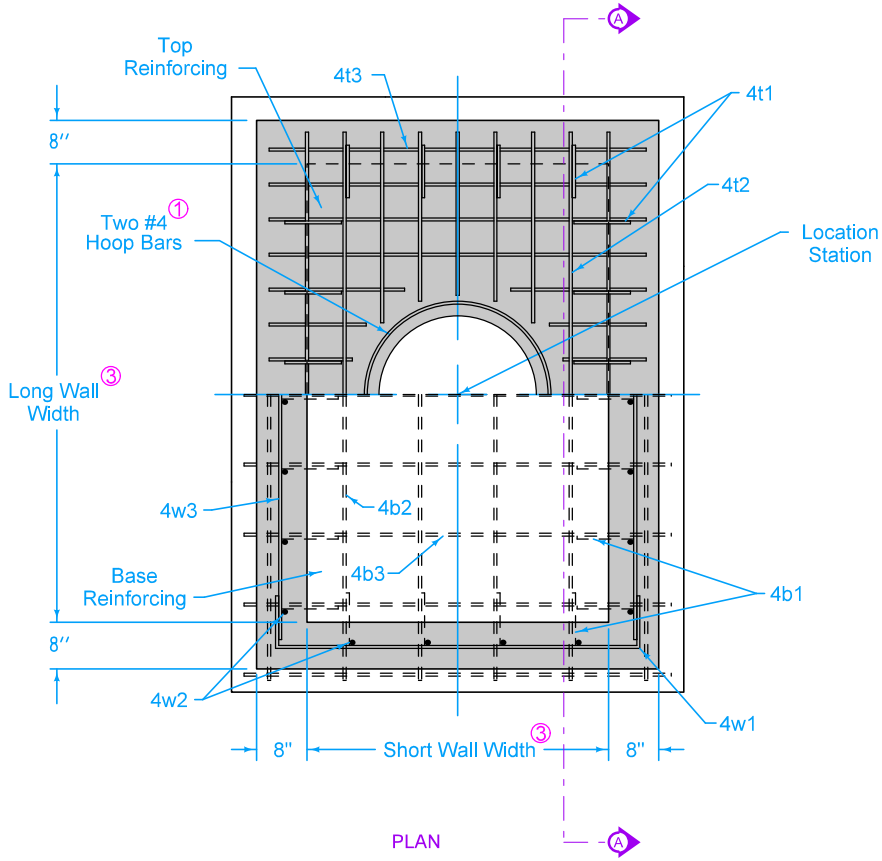

PLAN

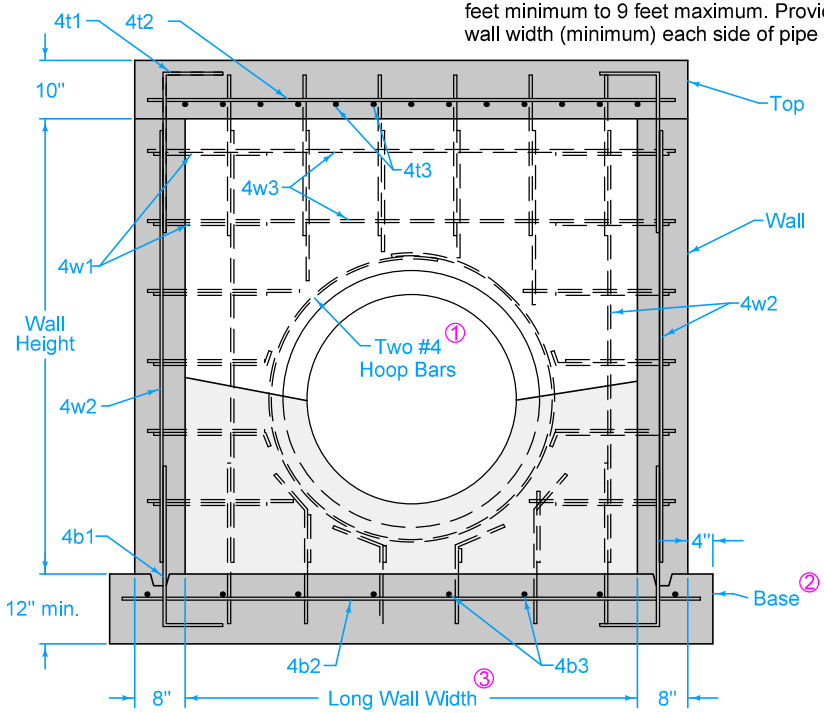

SECTION A-A

REINFORCING BAR LIST					
Mark	Size	Location	Shape	Length	Spacing
4t1	4	Top	⌉	36"	12"
4t2	4	Top	—	Long Wall plus 12"	6"
4t3	4	Top	—	Short Wall plus 12"	6"
4b1	4	Base	⌊	36"	12"
4b2	4	Base	—	Long Wall plus 18"	12"
4b3	4	Base	—	Short Wall plus 18"	12"
4w1	4	Walls	⌈⌉	Short Wall plus 48"	12"
4w2	4	Walls	—	Wall Height minus 4"	12"
4w3	4	Walls	—	Long Wall plus 12"	12"

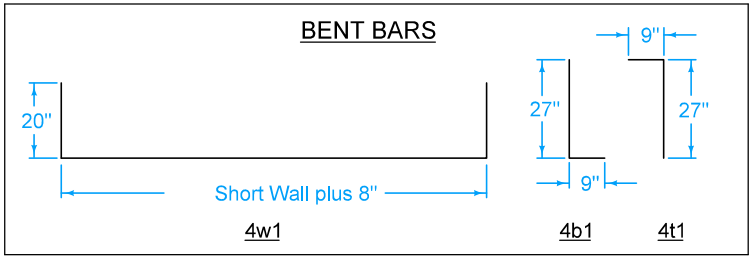

SUDAS | IOWA DOT

FIGURE 6010.403 | STANDARD ROAD PLAN

REVISION 2 04-21-20

SW-403

SHEET 2 of 2

REVISIONS: Added Class I Bedding Material.

SUDAS DIRECTOR | DESIGN METHODS ENGINEER

DEEP WELL RECTANGULAR STORM SEWER MANHOLE

FIGURE 6010.403 SHEET 2 OF 2

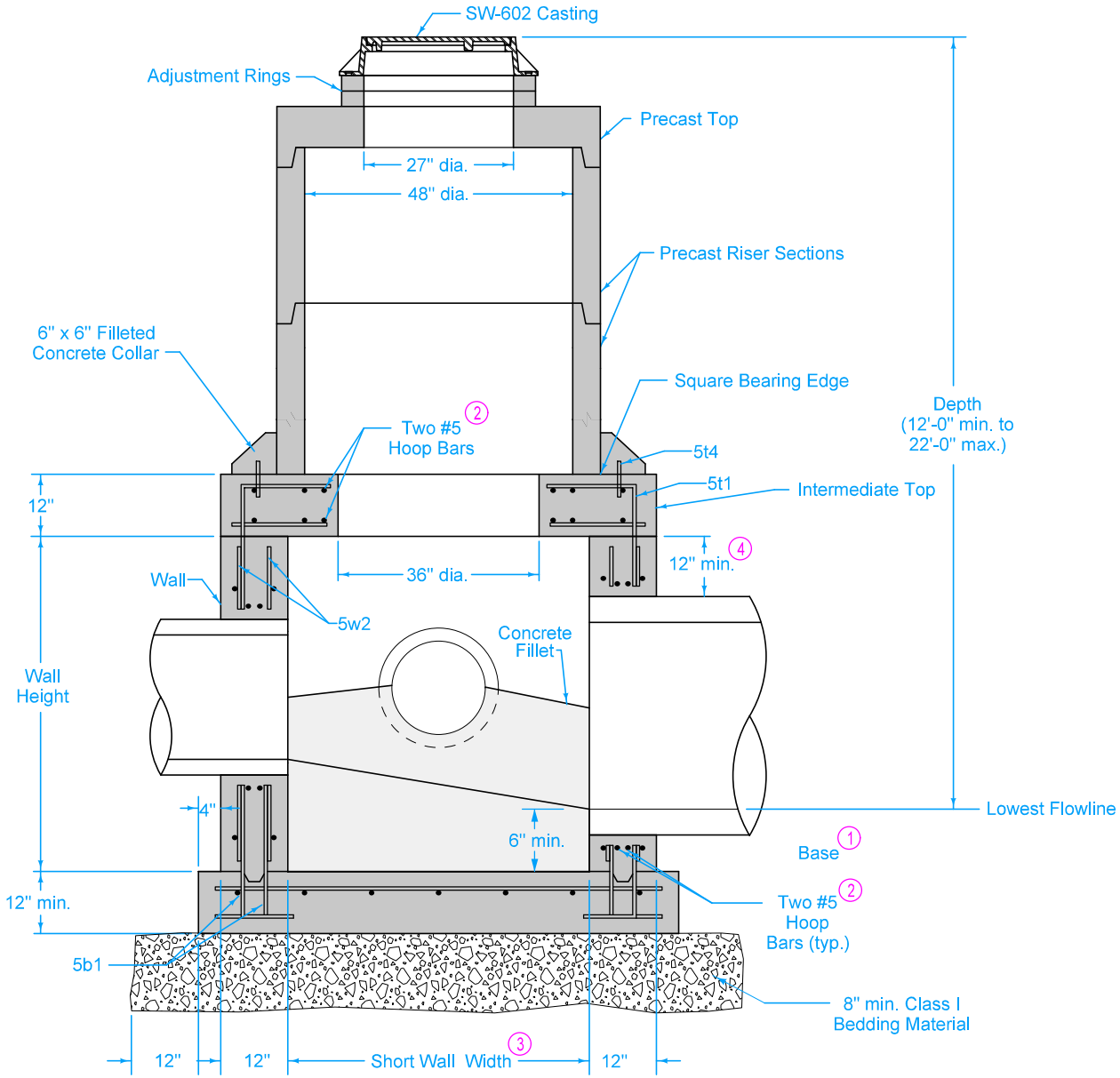

TYPICAL SECTION

Adjacent walls may have different widths based upon pipe configuration, but structure must be rectangular.

1. Cast-in-place base shown. If base is precast integral with walls, the footprint of the base is not required to extend beyond the outer edge of the walls.
2. Provide two #5 hoop bars at intermediate top opening and at all pipe openings.
3. Wall widths vary with pipe diameter and range from 4 feet minimum to 12 feet maximum. Provide 12 inches of wall width (minimum) each side of pipe opening.
4. 12 inch minimum wall height above all pipes.

SUDAS	IOWA DOT	REVISION 3 04-21-20
FIGURE 6010.404	STANDARD ROAD PLAN	SW-404 SHEET 1 of 2

REVISIONS: Added Class I Bedding Material and removed steps.

SUDAS DIRECTOR — DESIGN METHODS ENGINEER

RECTANGULAR BASE/ CIRCULAR TOP STORM SEWER MANHOLE

FIGURE 6010.404 SHEET 1 OF 2

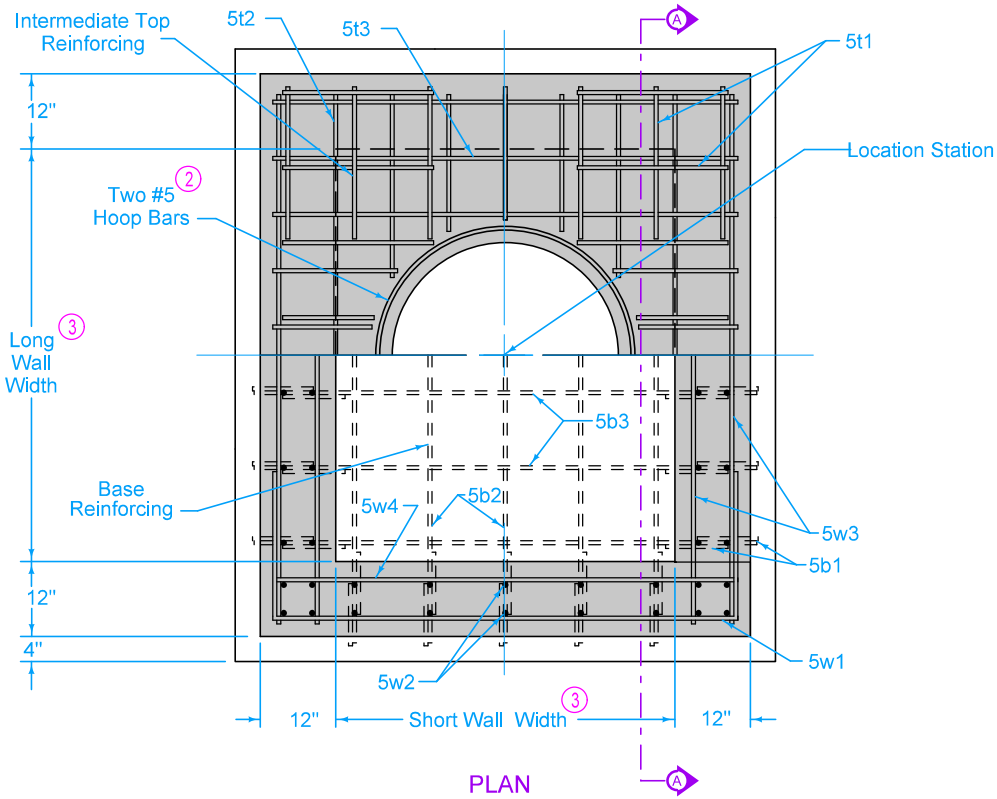

PLAN

2 Provide two #5 hoop bars at intermediate top opening and at all pipe openings.

3 Wall widths vary with pipe diameter and range from 4 feet minimum to 12 feet maximum. Provide 12 inches of wall width (minimum) each side of pipe opening.

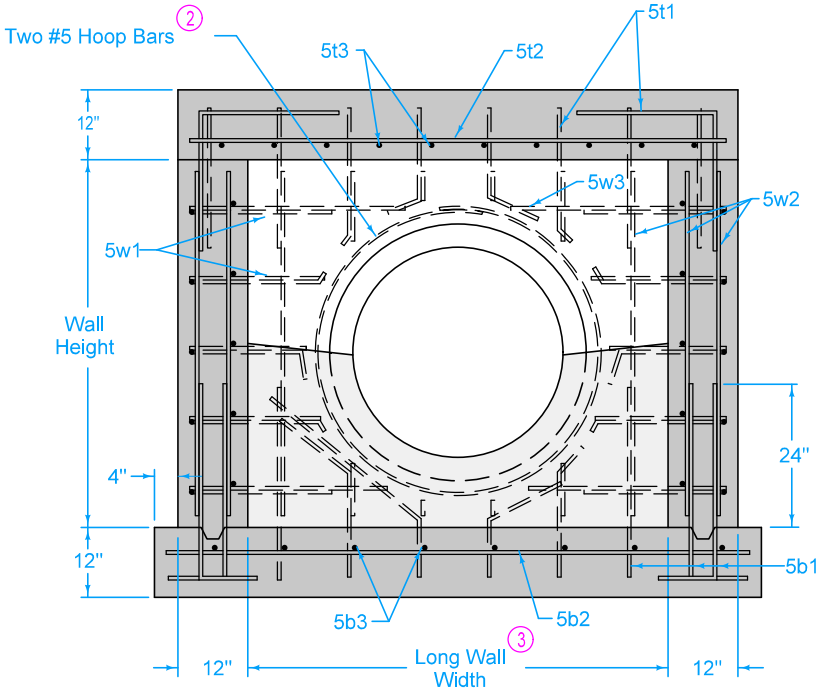

SECTION A-A

REINFORCING BAR LIST					
Mark	Size	Location	Shape	Length	Spacing
5t1	5	Top	L	48"	12"
5t2	5	Top	—	Long Wall plus 20"	9"
5t3	5	Top	—	Short Wall plus 20"	9"
5t4	5	Top	—	8"	12"
5b1	5	Base	L	43"	12"
5b2	5	Base	—	Long Wall plus 26"	12"
5b3	5	Base	—	Short Wall plus 26"	12"
5w1	5	Wall	⊓	Short Wall plus 68"	12"
5w2	5	Wall	—	Wall Height minus 4"	12"
5w3	5	Wall	—	Long Wall plus 20"	12"
5w4	5	Wall	—	Short Wall plus 20"	12"

BENT BARS

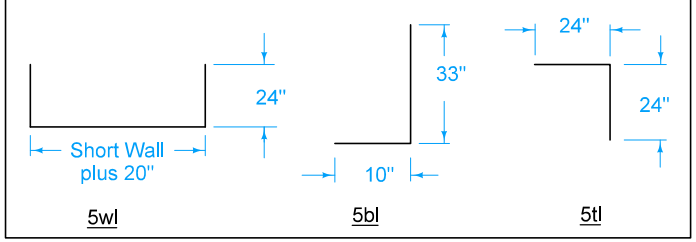

SUDAS	IOWA DOT	REVISION 3 04-21-20
FIGURE 6010.404	STANDARD ROAD PLAN	SW-404 SHEET 2 of 2

REVISIONS: Added Class I Bedding Material and removed steps.

SUDAS DIRECTOR — DESIGN METHODS ENGINEER

RECTANGULAR BASE/ CIRCULAR TOP STORM SEWER MANHOLE

FIGURE 6010.404 SHEET 2 OF 2

(1) For sewer pipes less than 48 inch diameter, install eccentric reducers/increasers with a standard tee or utilize a composite tee.

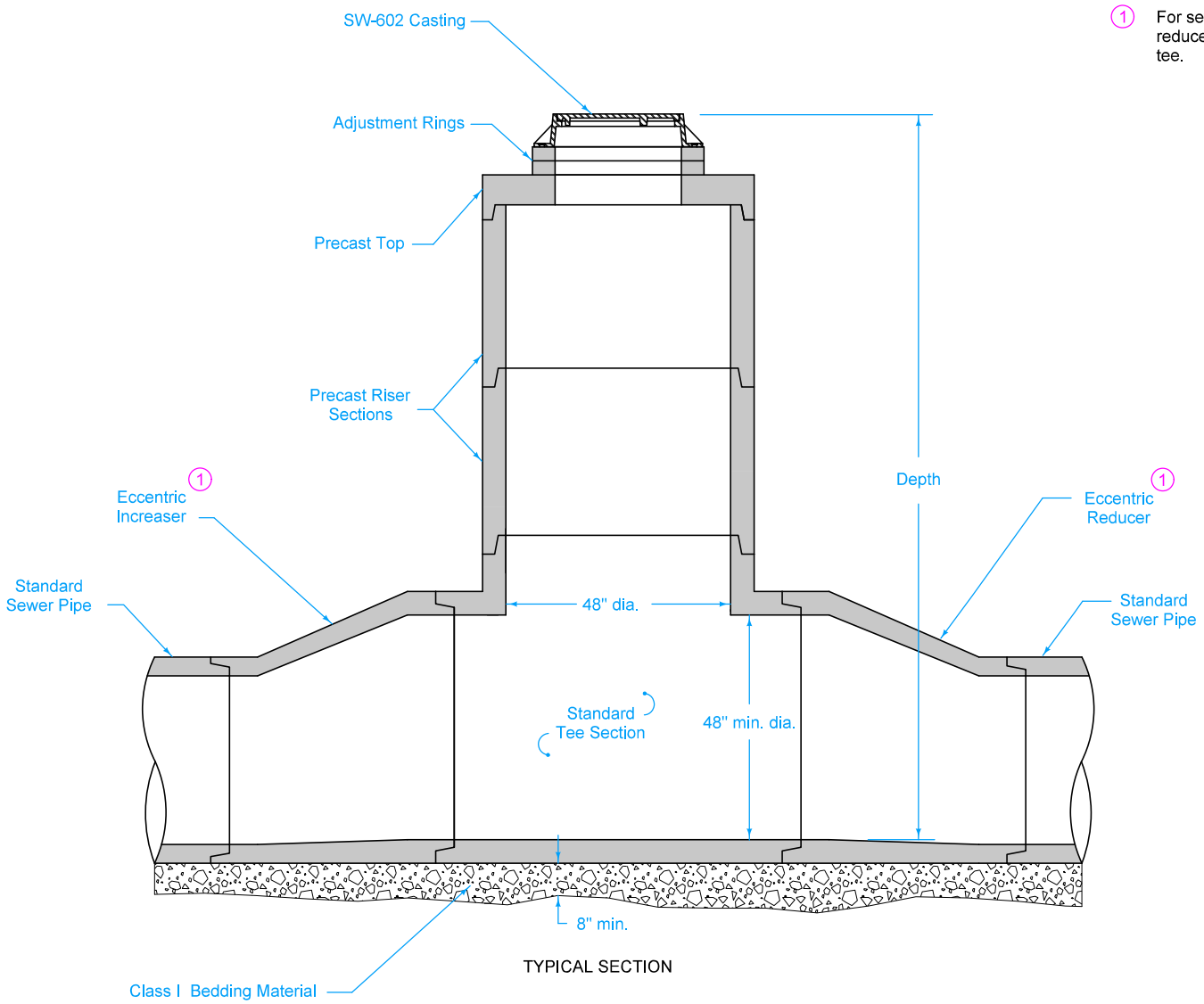

TYPICAL SECTION

STANDARD TEE (1)

SUDAS	IOWA DOT	REVISION 3 04-21-20
FIGURE 6010.405	STANDARD ROAD PLAN	SW-405 SHEET 1 of 2

REVISIONS: Changed 1 to I on Bedding Material and removed steps.

SUDAS DIRECTOR — DESIGN METHODS ENGINEER

TEE-SECTION
STORM SEWER MANHOLE

FIGURE 6010.405 SHEET 1 OF 2

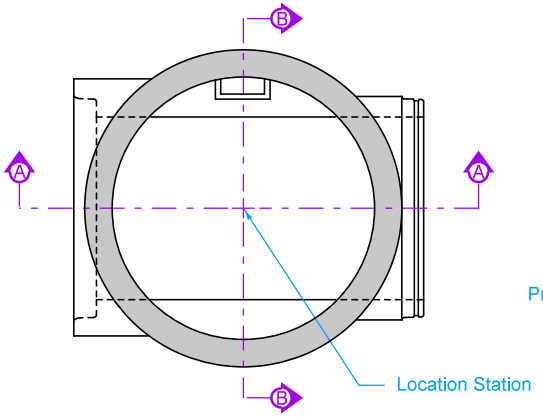

PLAN

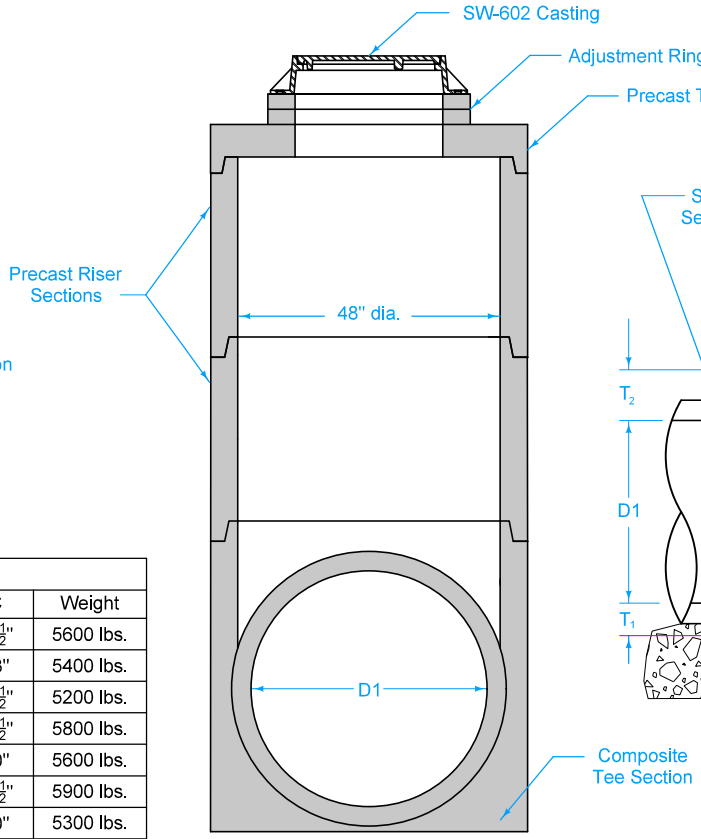

SECTION B-B

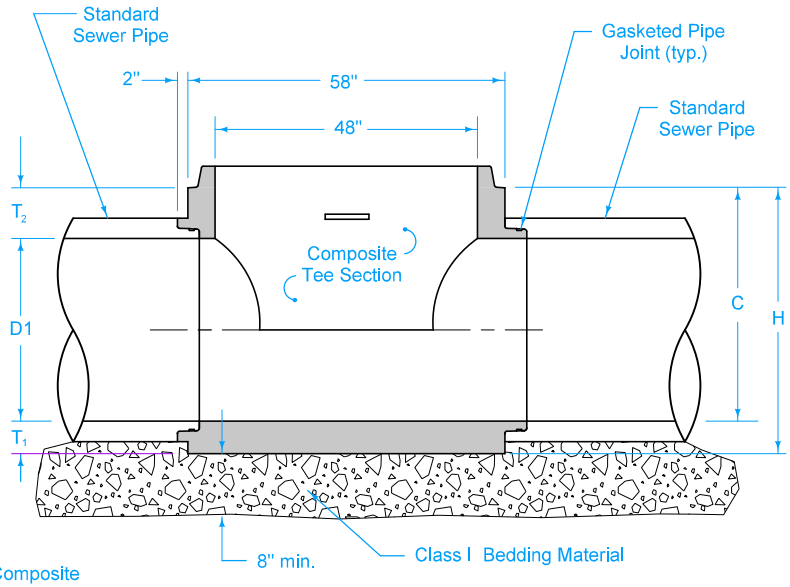

SECTION A-A

COMPOSITE TEE DIMENSIONS						
Size	D1	H	T_1	T_2	C	Weight
48" on 12"	12"	50"	$8\frac{1}{2}$"	$29\frac{1}{2}$"	$41\frac{1}{2}$"	5600 lbs.
48" on 15"	15"	50"	7"	28"	43"	5400 lbs.
48" on 18"	18"	50"	$5\frac{1}{2}$"	$26\frac{1}{2}$"	$44\frac{1}{2}$"	5200 lbs.
48" on 21"	21"	48"	$9\frac{1}{2}$"	$17\frac{1}{2}$"	$38\frac{1}{2}$"	5800 lbs.
48" on 24"	24"	48"	8"	16"	40"	5600 lbs.
48" on 27"	27"	48"	$9\frac{1}{2}$"	$11\frac{1}{2}$"	$38\frac{1}{2}$"	5900 lbs.
48" on 30"	30"	48"	8"	10"	40"	5300 lbs.
48" on 33"	33"	54"	$9\frac{1}{2}$"	$11\frac{1}{2}$"	$44\frac{1}{2}$"	6600 lbs.
48" on 36"	36"	54"	8"	10"	46"	6100 lbs.

COMPOSITE TEE

Alternate to standard tee with eccentric reducer (for pipes 36" and smaller).

FIGURE 6010.405 SHEET 2 OF 2

SUDAS | IOWA DOT

REVISION 3 04-21-20

FIGURE 6010.405 | STANDARD ROAD PLAN

SW-405

SHEET 2 of 2

REVISIONS: Changed 1 to I on Bedding Material and removed steps.

SUDAS DIRECTOR | DESIGN METHODS ENGINEER

TEE-SECTION
STORM SEWER MANHOLE

Adjacent walls may have different widths based upon pipe configuration, but structure must be rectangular.

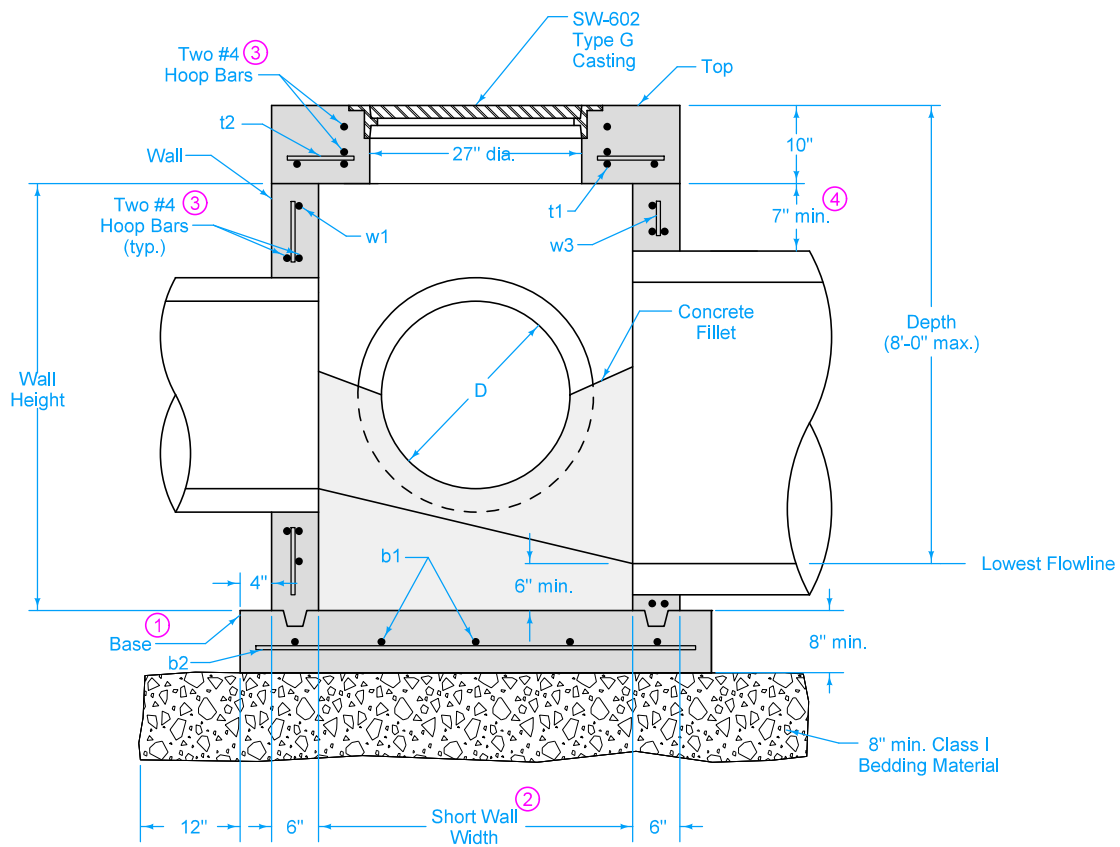

TYPICAL SECTION

1. Cast-in-place base shown. If base is precast integral with walls, the footprint of the base is not required to extend beyond the outer edge of the walls.
2. Wall widths vary with pipe diameter and range from 40 inches minimum to 77 inches maximum. Provide 6 inches of wall width (minimum) each side of pipe opening.
3. Provide two #4 hoop bars at top opening and at all pipe openings.
4. 7 inch minimum wall height above all pipes.

SUDAS	IOWA DOT	REVISION 2 04-21-20
FIGURE 6010.406	STANDARD ROAD PLAN	SW-406 SHEET 1 of 2

REVISIONS: Added Class I Bedding Material.

Paul D. Wiegand — SUDAS DIRECTOR
Stuart Nielsen — DESIGN METHODS ENGINEER

SHALLOW RECTANGULAR STORM SEWER MANHOLE

FIGURE 6010.406 SHEET 1 OF 2

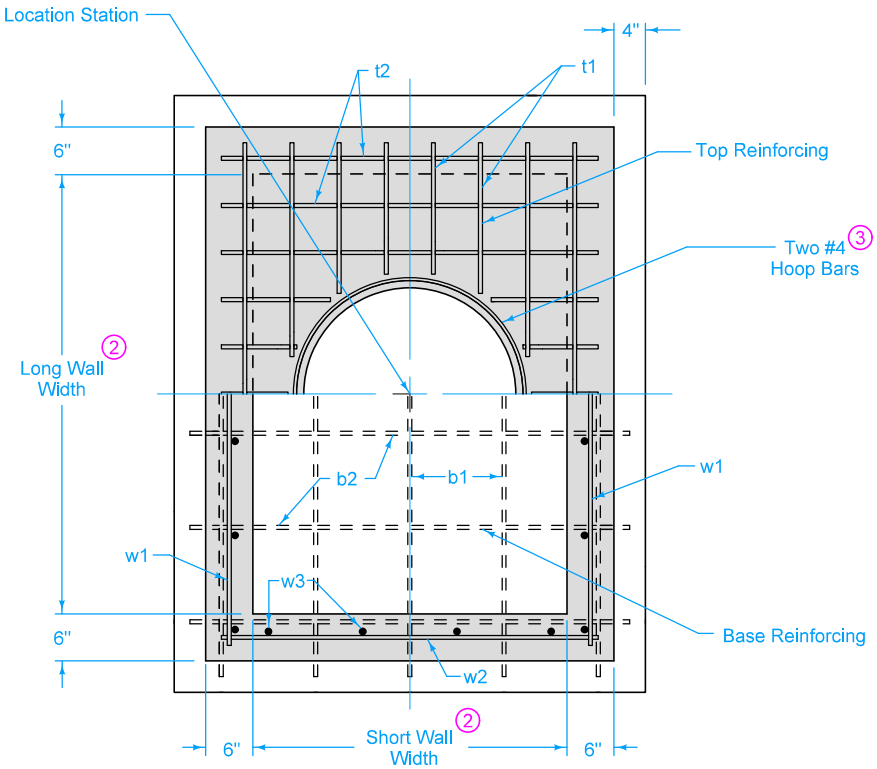

PLAN

2 Wall widths vary with pipe diameter and range from 40 inches minimum to 77 inches maximum. Provide 6 inches of wall width (minimum) each side of pipe opening.

3 Provide two #4 hoop bars at top opening and at all pipe openings.

REINFORCING BAR LIST					
Mark	Size	Location	Shape	Length	Spacing
t1	See Table	Top	——	Long Wall plus 8"	6"
t2	See Table	Top	——	Short Wall plus 8"	6"
b1	See Table	Base	——	Long Wall plus 14"	12"
b2	See Table	Base	——	Short Wall plus 14"	12"
w1	See Table	Walls	——	Long Wall plus 8"	12"*
w2	See Table	Walls	——	Short Wall plus 8"	12"
w3	See Table	Walls	——	Wall Height minus 4"	12"

*Place a minimum of one w1 bar above each pipe opening

Diameter of Largest Pipe, D	Minimum Bar Size
48" or 54"	6
33" to 42"	5
30" or smaller	4

SUDAS | IOWA DOT

REVISION 2 04-21-20

FIGURE 6010.406 | STANDARD ROAD PLAN | SW-406

SHEET 2 of 2

REVISIONS: Added Class I Bedding Material.

SUDAS DIRECTOR | DESIGN METHODS ENGINEER

SHALLOW RECTANGULAR STORM SEWER MANHOLE

FIGURE 6010.406 SHEET 2 OF 2

Refer to SW-514 for boxout details.

1. Install four #4 diagonal bars at all pipe openings.
2. SW-603 Type R unless Type Q is specified in the contract documents.
3. Cast-in-place base shown. If base is precast integral with walls, the footprint of the base is not required to extend beyond the outer edge of the walls.
4. 12 inch minimum wall height above all pipes.

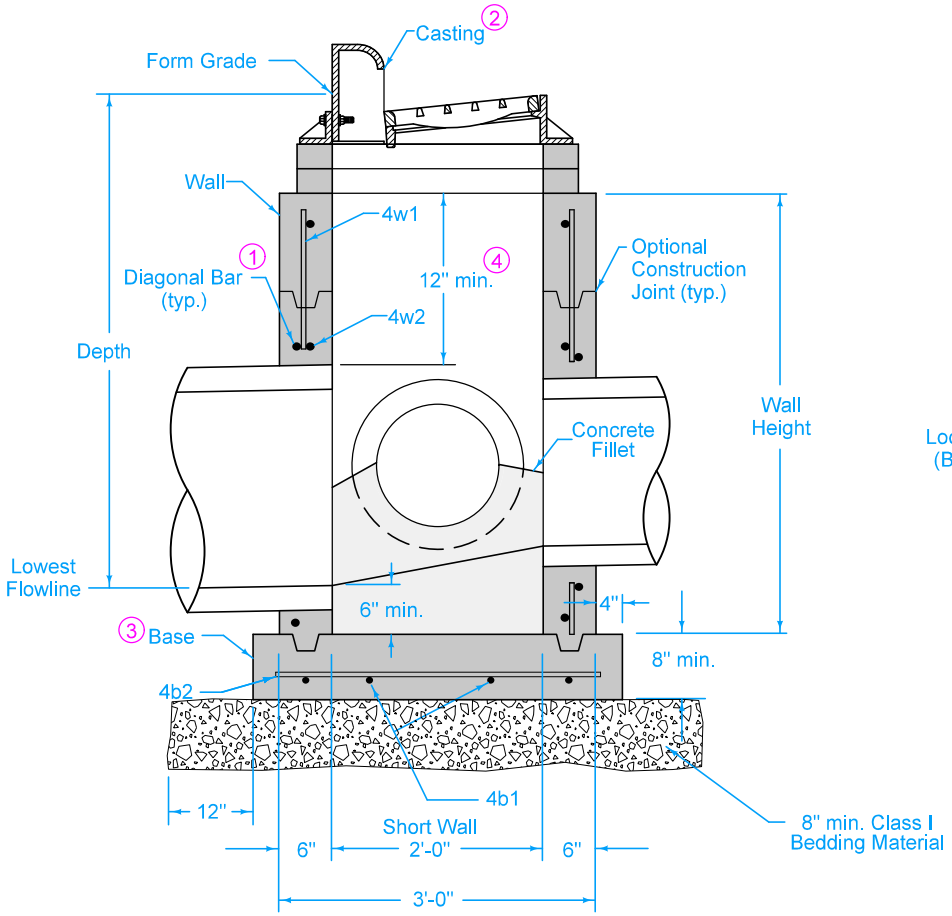

SECTION A-A

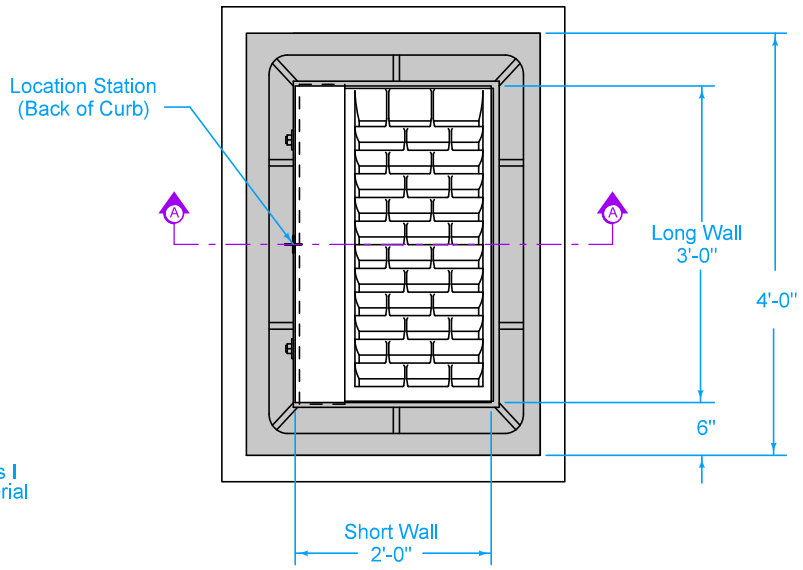

PLAN

REINFORCING BAR LIST						
Mark	Size	Location	Shape	Length	Count	Spacing
4w1	4	Walls	———	Wall Height minus 4"	14	12"
4w2	4	Long Walls	———	3'-8"	Varies	12"
4w3	4	Short Walls	———	2'-8"	Varies	12"
4b1	4	Base	———	4'-2"	4	10"
4b2	4	Base	———	3'-2"	5	10"

MAXIMUM PIPE DIAMETERS		
Pipe Location	Precast Structure	Cast-in-place Structure
Short Wall	15"	18"
Long Wall	24"	30"

SUDAS | IOWA DOT

REVISION 3 04-21-20

FIGURE 6010.501 | STANDARD ROAD PLAN | SW-501

SHEET 1 of 1

REVISIONS: Added Class I Bedding Material.

SUDAS DIRECTOR | DESIGN METHODS ENGINEER

SINGLE GRATE INTAKE

FIGURE 6010.501 SHEET 1 OF 1

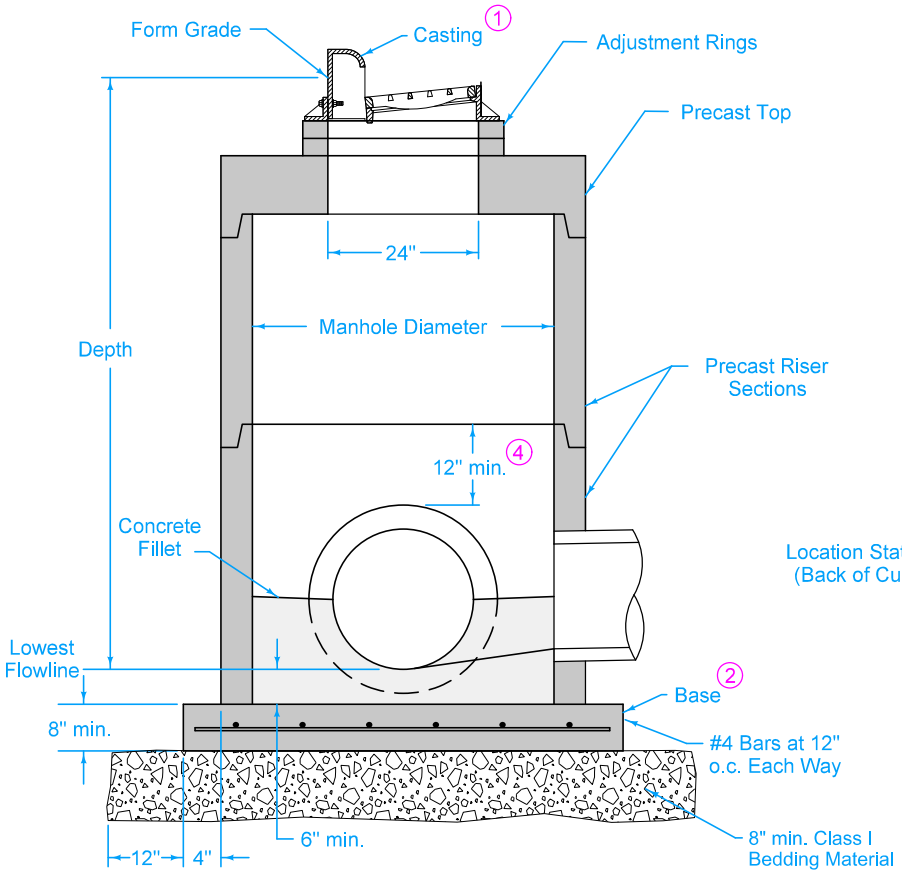

TYPICAL SECTION

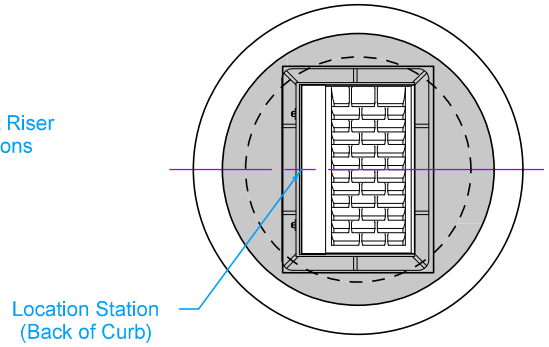

PLAN

Refer to SW-514 for boxout details.

1. SW-603 Type R unless Type Q is specified in the contract documents.
2. Cast-in-place base shown. Base may be square. If base is precast integral with walls, the footprint of the base is not required to extend beyond the outer edge of the walls.
3. For additional configurations, maintain a minimum of 12 inches of concrete between vertical edges of pipe openings.
4. 12 inch minimum riser height above all pipes.

Manhole Diameter (inches)	Maximum Pipe Diameter (inches) for 2 Pipes 3	
	at 180° Separation	at 90° Separation
48	24	18
60	36	24
72	42	30
84	48	36
96	60	42

SUDAS | IOWA DOT | REVISION 1 04-21-20

FIGURE 6010.502 | STANDARD ROAD PLAN | SW-502 | SHEET 1 of 1

REVISIONS: Added Class I Bedding Material.

SUDAS DIRECTOR | DESIGN METHODS ENGINEER

CIRCULAR SINGLE GRATE INTAKE

FIGURE 6010.502 SHEET 1 OF 1

Refer to SW-514 for boxout details.

1. Install four #4 diagonal bars at manhole opening and at all pipe openings.
2. Cast-in-place base shown. If base is precast integral with walls, the footprint of the base is not required to extend beyond the outer edge of the walls.
3. 12 inch minimum wall height above all pipes.

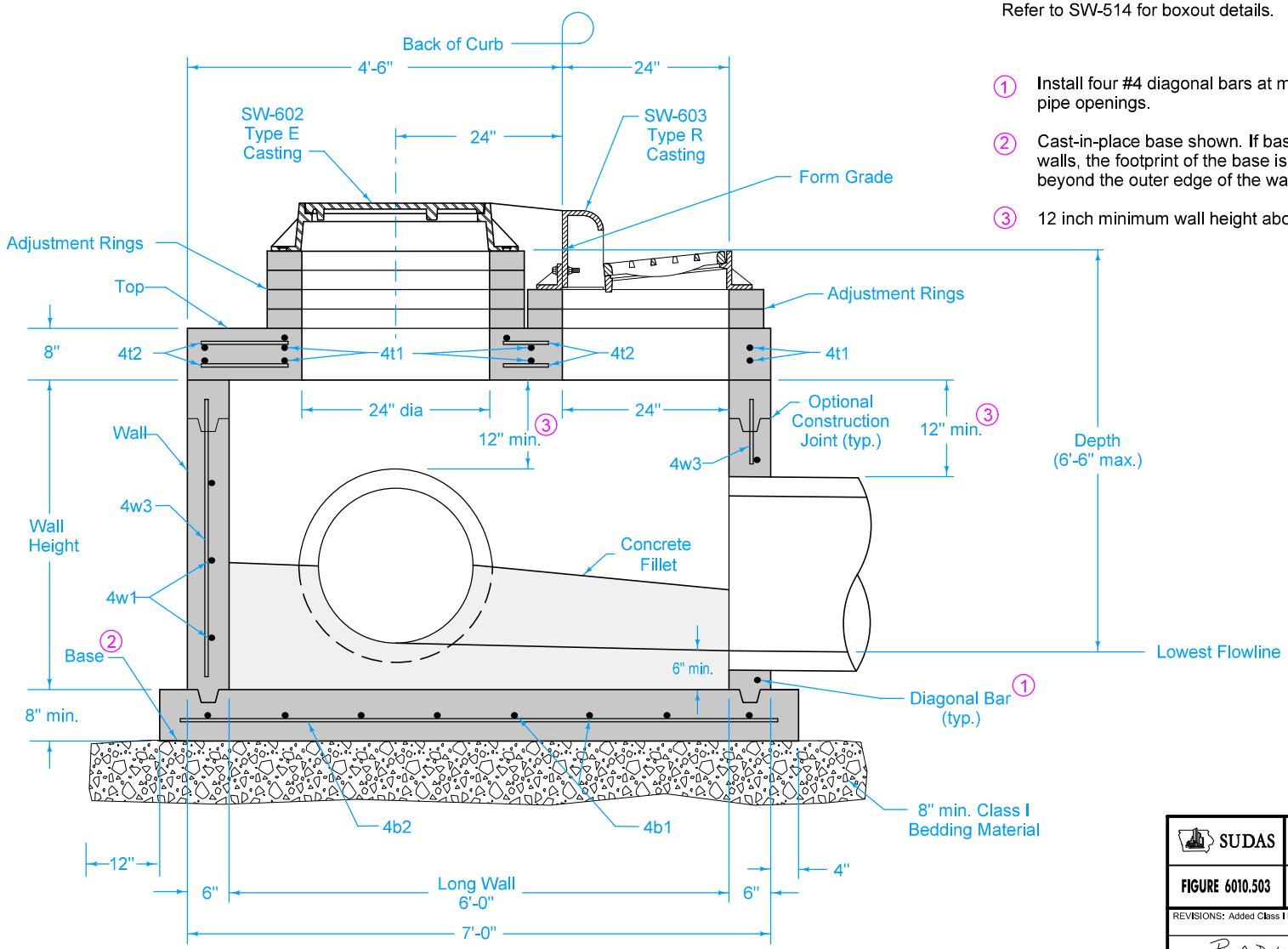

TYPICAL SECTION

SUDAS	IOWA DOT	REVISION 3 04-21-20
FIGURE 6010.503	STANDARD ROAD PLAN	SW-503 SHEET 1 of 2

REVISIONS: Added Class I Bedding Material.

SUDAS DIRECTOR — DESIGN METHODS ENGINEER

SINGLE GRATE INTAKE WITH MANHOLE

FIGURE 6010.503 SHEET 1 OF 2

① Install four #4 diagonal bars at manhole opening and at all pipe openings.

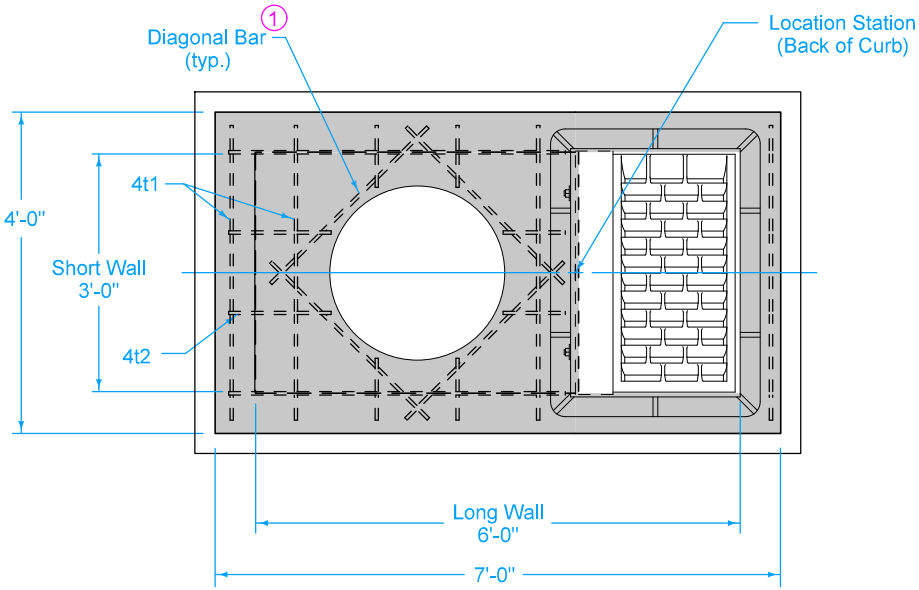

PLAN

REINFORCING BAR LIST						
Mark	Size	Location	Shape	Count	Length	Spacing
4t1	4	Top	——	12	3'-8"	12"
4t2	4	Top	——	8	4'-2"	12"
4b1	4	Base	——	7	4'-2"	13"
4b2	4	Base	——	5	7'-2"	10"
4w1	4	Short Walls	——	Varies	3'-8"	12"
4w2	4	Long Walls	——	Varies	6'-8"	12"
4w3	4	Walls	——	18	Wall Height minus 4"	13"

MAXIMUM PIPE DIAMETERS		
Pipe Location	Precast Structure	Cast-in-place Structure
Short Wall	24"	30"
Long Wall	30"	36"

SUDAS | IOWA DOT

REVISION 3 04-21-20

FIGURE 6010.503 | STANDARD ROAD PLAN | SW-503

SHEET 2 of 2

REVISIONS: Added Class I Bedding Material.

SUDAS DIRECTOR | DESIGN METHODS ENGINEER

SINGLE GRATE INTAKE WITH MANHOLE

FIGURE 6010.503 SHEET 2 OF 2

Refer to SW-514 for boxout details.

1. Install four #4 diagonal bars at manhole opening and at all pipe openings.
2. Cast-in-place base shown. If base is precast integral with walls, the footprint of the base is not required to extend beyond the outer edge of the walls.
3. 12 inch minimum wall height above all pipes.
4. Slope of 1.5% or as specified in the contract documents.

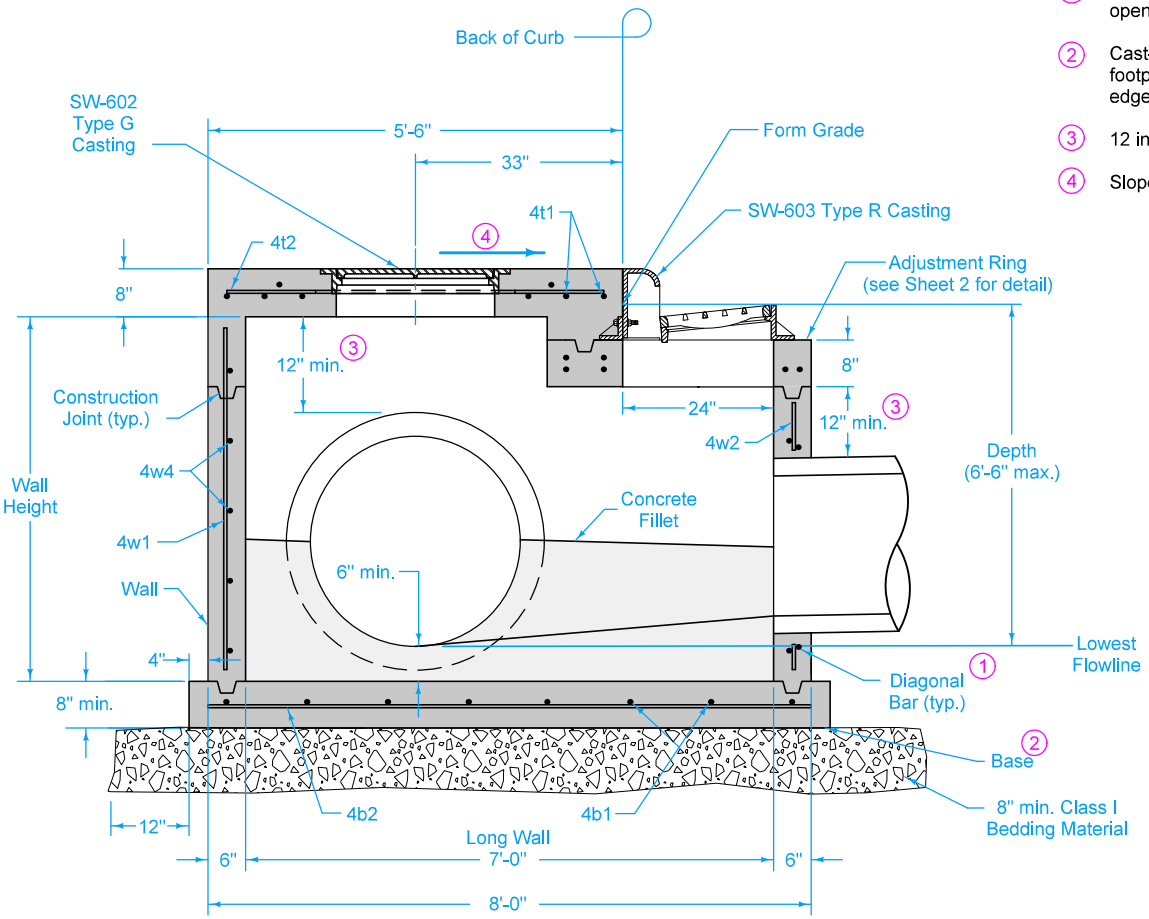

SECTION A-A

SUDAS	IOWA DOT	REVISION 4 04-21-20
FIGURE 6010.504	STANDARD ROAD PLAN	SW-504 SHEET 1 of 2

REVISIONS: Added Class I Bedding Material.

SUDAS DIRECTOR — DESIGN METHODS ENGINEER

SINGLE GRATE INTAKE WITH FLUSH-TOP MANHOLE

FIGURE 6010.504 SHEET 1 OF 2

(1) Install four #4 diagonal bars at manhole opening and at all pipe openings.

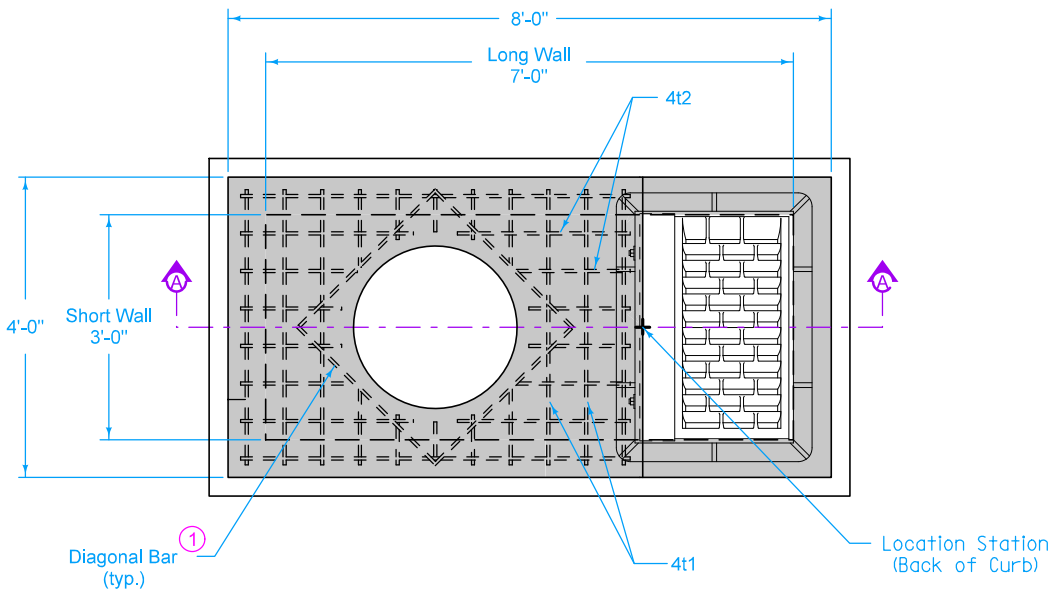

PLAN

ADJUSTMENT RING

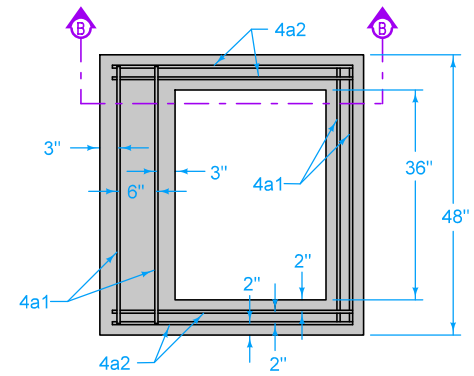

PLAN

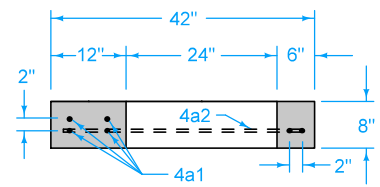

SECTION B-B

REINFORCING BAR LIST						
Mark	Size	Location	Shape	Count	Length	Spacing
4t1	4	Top	——	11	3'-8"	6"
4t2	4	Top	——	8	5'-2"	6"
4b1	4	Base	——	8	4'-2"	13"
4b2	4	Base	——	5	8'-2"	10"
4a1	4	Adj. Ring	——	6	3'-8"	See Adj. Ring Plan
4a2	4	Adj. Ring	——	4	3'-2"	See Adj. Ring Plan
4w1	4	Walls	——	13	Wall Height minus 4"	12"
4w2	4	Walls	——	11	Wall Height minus 16"	12"
4w3	4	Long Walls	——	Varies	7'-8"	12"
4w4	4	Short Walls	——	Varies	3'-8"	12"

MAXIMUM PIPE DIAMETERS		
Pipe Location	Precast Structure	Cast-in-place Structure
Short Wall	18"	24"
Long Wall	30"	36"

SUDAS | IOWA DOT

FIGURE 6010.504 | STANDARD ROAD PLAN

REVISION 4 04-21-20

SW-504

SHEET 2 of 2

REVISIONS: Added Class I Bedding Material.

SUDAS DIRECTOR | DESIGN METHODS ENGINEER

SINGLE GRATE INTAKE WITH FLUSH-TOP MANHOLE

FIGURE 6010.504 SHEET 2 OF 2

Refer to SW-514 for boxout details.

1. Install four #4 diagonal bars at all pipe openings.
2. Cast-in-place base shown. If base is precast integral with walls, the footprint of the base is not required to extend beyond the outer edge of the walls.
3. 12 inch minimum wall height above all pipes.

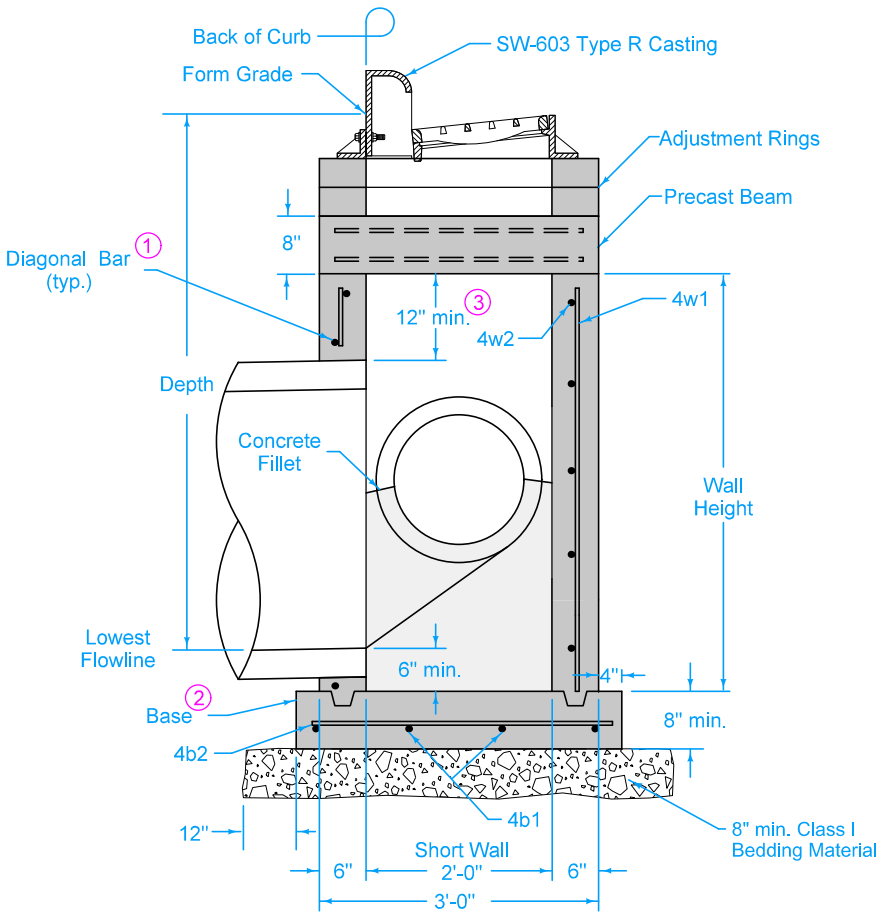

SECTION A-A

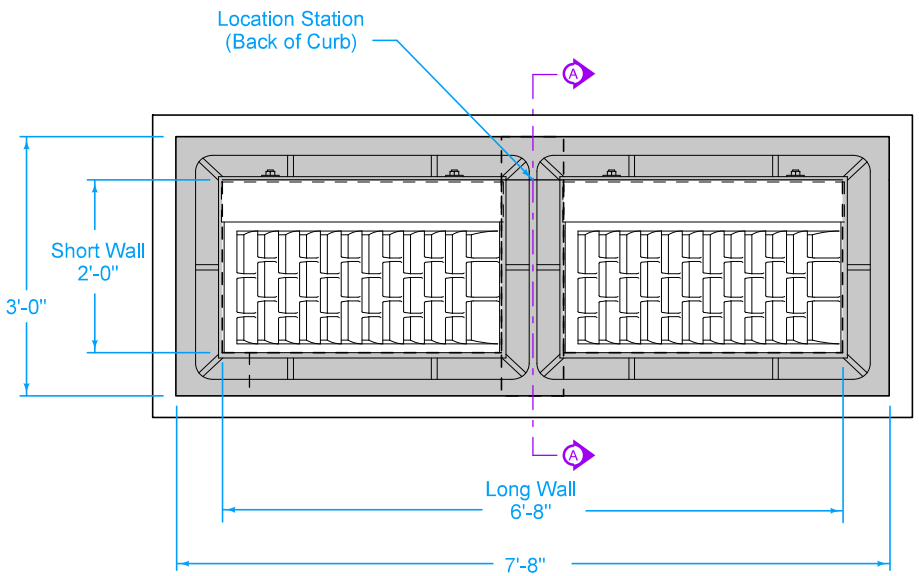

PLAN

SUDAS	IOWA DOT	REVISION 3 04-21-20
FIGURE 6010.505	STANDARD ROAD PLAN	SW-505 SHEET 1 of 2

REVISIONS: Added Class I Bedding Material.

SUDAS DIRECTOR — DESIGN METHODS ENGINEER

DOUBLE GRATE INTAKE

FIGURE 6010.505 SHEET 1 OF 2

1. Install four #4 diagonal bars at all pipe openings.
2. Cast-in-place base shown. If base is precast integral with walls, the footprint of the base is not required to extend beyond the outer edge of the walls.
3. 12 inch minimum wall height above all pipes.

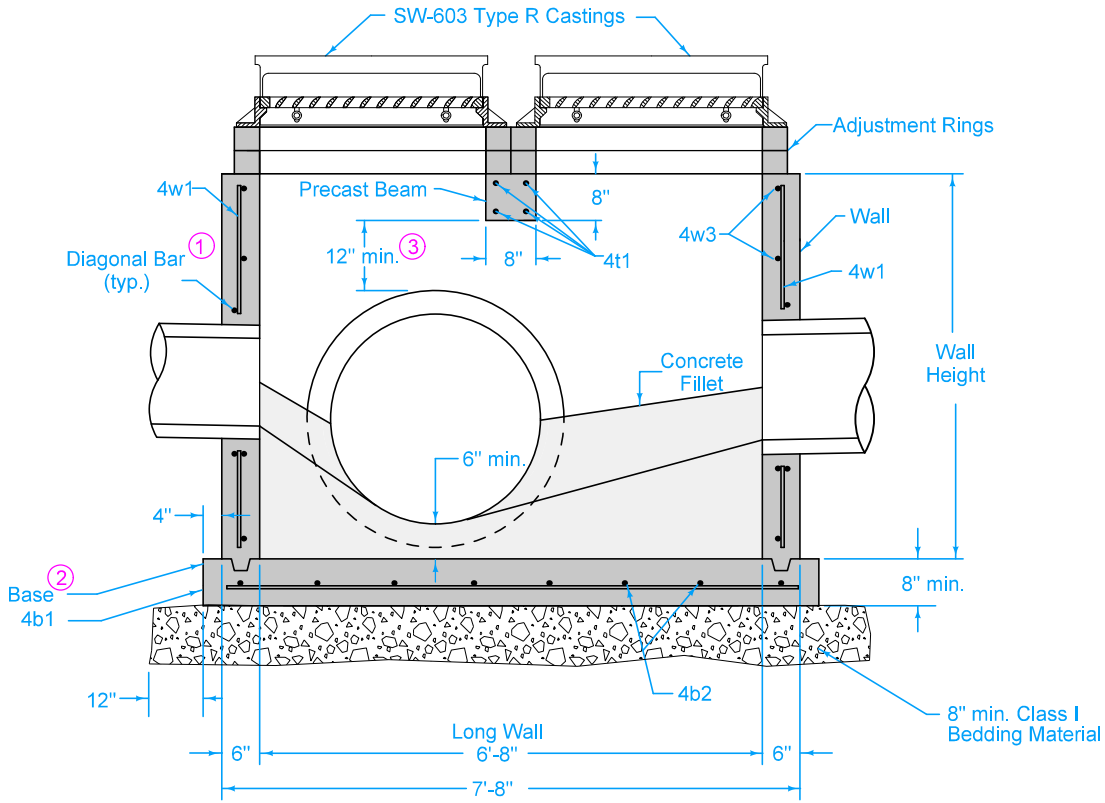

TYPICAL SECTION

REINFORCING BAR LIST						
Mark	Size	Location	Shape	Count	Length	Spacing
4t1	4	Beam	——	4	2'-8"	4"
4b1	4	Base	——	4	7'-10"	10"
4b2	4	Base	——	8	3'-2"	12"
4w1	4	Walls	——	20	Wall Height minus 4"	12"
4w2	4	Long Walls	——	Varies	7'-4"	12"
4w3	4	Short Walls	——	Varies	2'-8"	12"

MAXIMUM PIPE DIAMETERS		
Pipe Location	Precast Structure	Cast-in-place Structure
Short Wall	15"	18"
Long Wall	60"	66"

SUDAS | IOWA DOT

REVISION 3 04-21-20

FIGURE 6010.505 | STANDARD ROAD PLAN | SW-505

SHEET 2 of 2

REVISIONS: Added Class I Bedding Material.

SUDAS DIRECTOR | DESIGN METHODS ENGINEER

DOUBLE GRATE INTAKE

FIGURE 6010.505 SHEET 2 OF 2

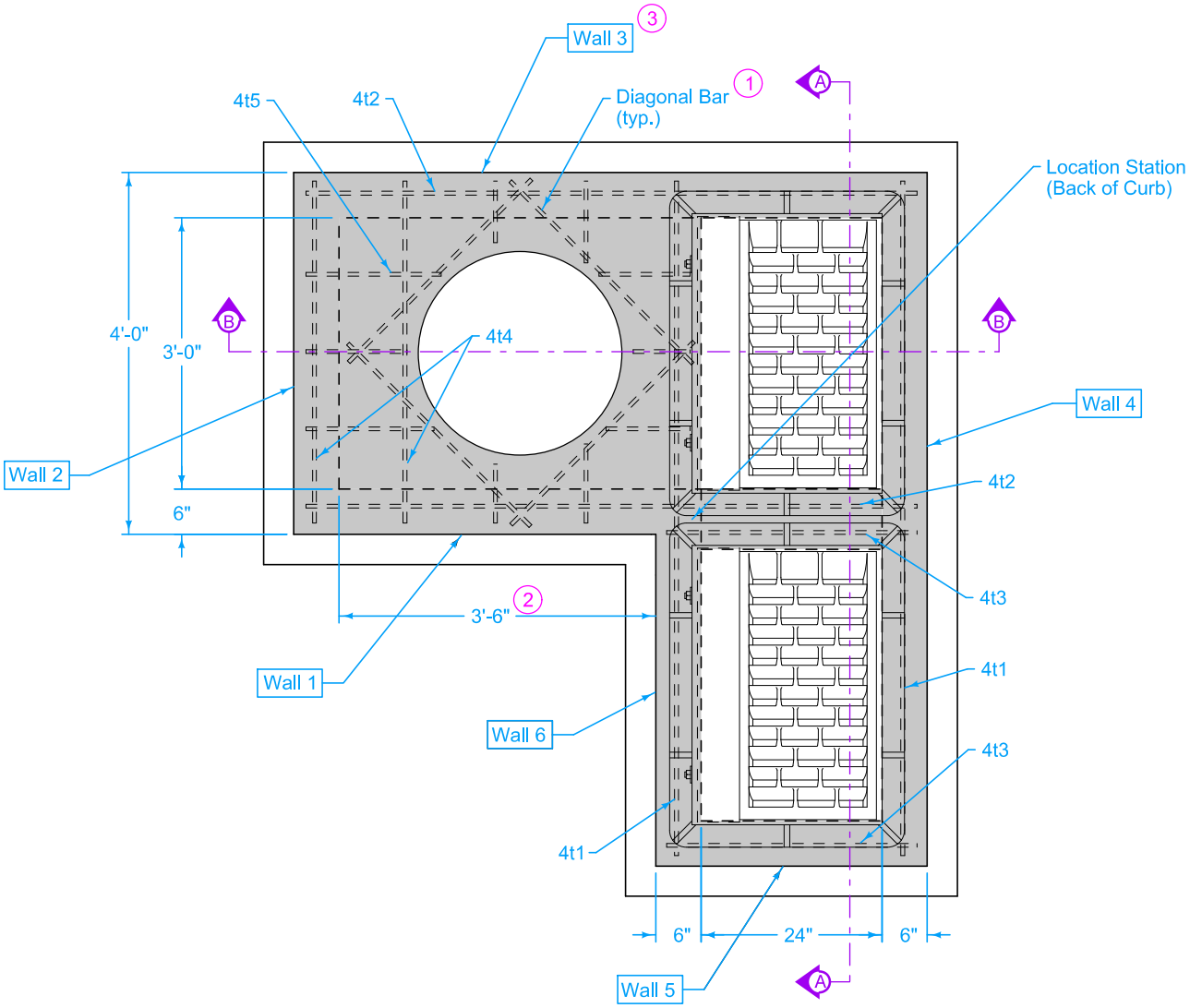

PLAN

Maximum pipe diameters are set based on maximum structure depth of 6 feet-6 inches and the objective of placement of the centerline of the pipe on the centerline of the manhole opening for maintenance purposes.

Refer to SW-514 for boxout details.

1. Install four #4 diagonal bars at manhole opening and at all pipe openings.
2. If Wall 1 is widened to 4 feet, the maximum pipe diameter can be increased to 36 inches.
3. If Wall 1 is widened to 4 feet, the maximum pipe diameter in Wall 3 can be increased to 42 inches.

MAXIMUM PIPE DIAMETERS	
Wall	Max. Dia.
1	30" (2)
2	24"
3	36" (3)
4	42"

SUDAS | IOWA DOT | REVISION 4 04-21-20

FIGURE 6010.506 | STANDARD ROAD PLAN | SW-506

SHEET 1 of 2

REVISIONS: Added Class I Bedding Material.

SUDAS DIRECTOR | DESIGN METHODS ENGINEER

DOUBLE GRATE INTAKE WITH MANHOLE

FIGURE 6010.506 | SHEET 1 OF 2

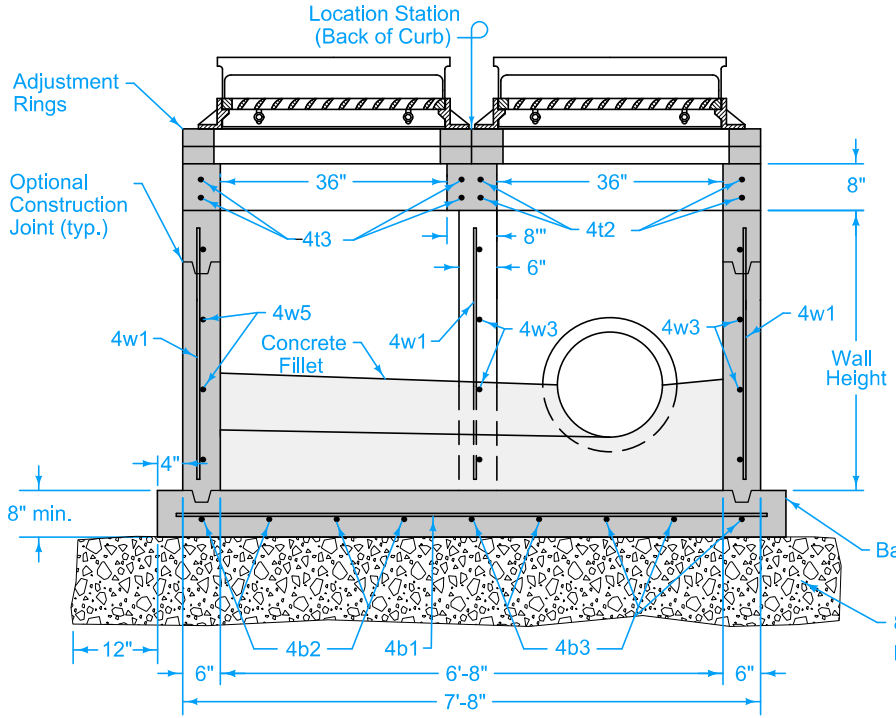

SECTION A-A

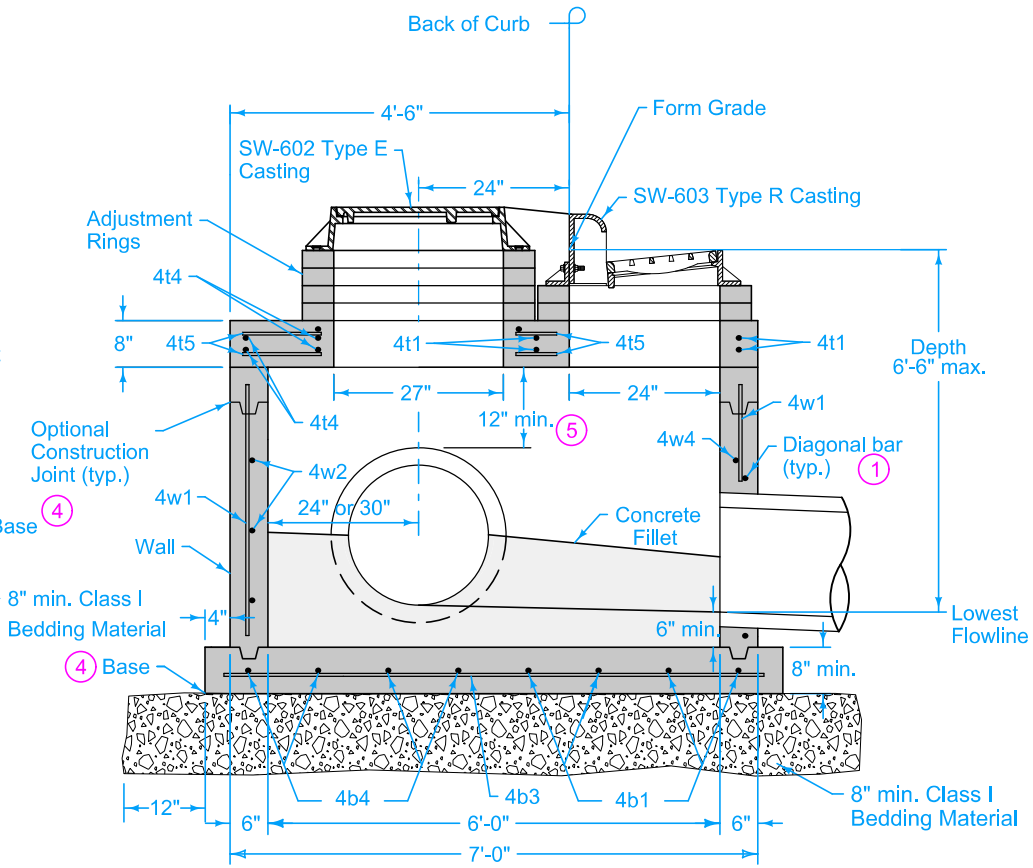

SECTION B-B

REINFORCING BAR LIST						
Mark	Size	Location	Shape	Count	Length	Spacing
4t1	4	Top	——	4	7'-4"	See Detail
4t2	4	Top	——	4	6'-8"	See Detail
4t3	4	Top	——	4	2'-8"	See Detail
4t4	4	Top	——	8	3'-8"	12"
4t5	4	Top	——	6	4'-2"	12"
4b1	4	Base	——	4	7'-10"	12"
4b2	4	Base	——	4	3'-2"	12"
4b3	4	Base	——	5	7'-2"	12"
4b4	4	Base	——	4	4'-2"	12"
4w1	4	Walls	——	29	Wall Height minus 4"	12"
4w2	4	Wall 2	——	Varies	3'-8"	12"
4w3	4	Walls 1 and 3	——	Varies	6'-8"	12"
4w4	4	Wall 4	——	Varies	7'-4"	12"
4w5	4	Wall 5	——	Varies	2'-8"	12"
4w6	4	Wall 6	——	Varies	3'-10"	12"

(1) Install four #4 diagonal bars at manhole opening and at all pipe openings.

(4) Cast-in-place base shown. If base is precast integral with walls, the footprint of base is not required to extend beyond the outer edge of the walls.

(5) 12 inch minimum wall height above all pipes.

SUDAS | IOWA DOT

REVISION 4 04-21-20

FIGURE 6010.506 | STANDARD ROAD PLAN | SW-506

SHEET 2 of 2

REVISIONS: Added Class I Bedding Material.

SUDAS DIRECTOR | DESIGN METHODS ENGINEER

DOUBLE GRATE INTAKE WITH MANHOLE

FIGURE 6010.506 | SHEET 2 OF 2

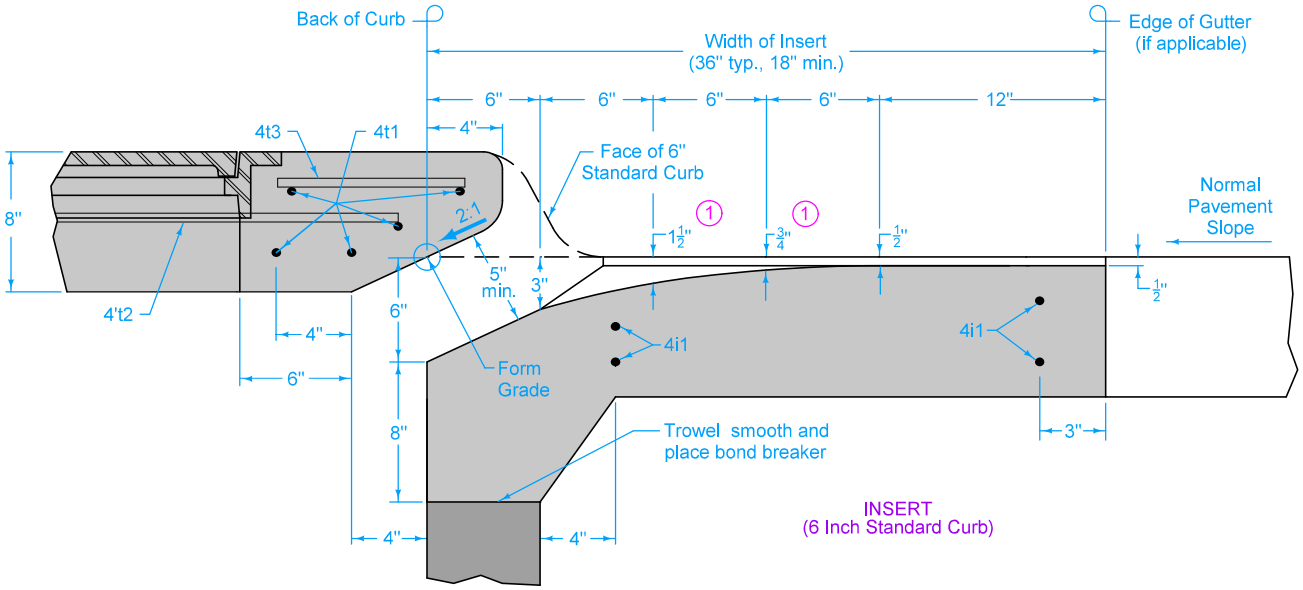

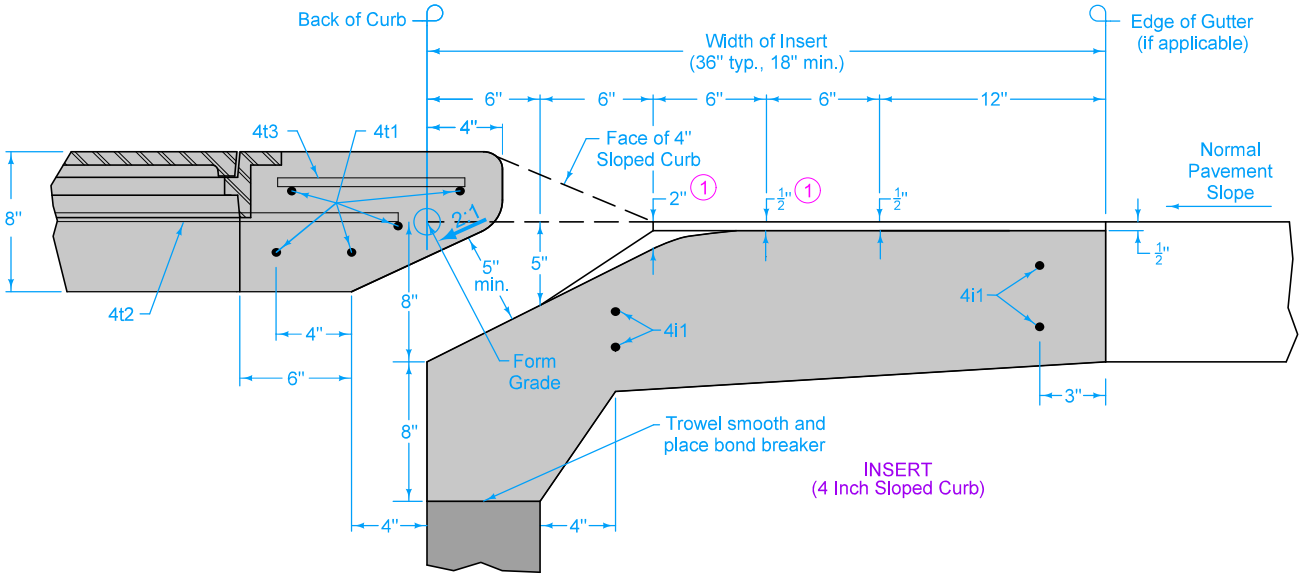

1 Insert shaping may be modified for insert widths less than 36 inches. For an 18 inch insert, reduce dimensions indicated by $\frac{1}{2}$ inch.

SUDAS	IOWA DOT	REVISION 4 04-21-20
FIGURE 6010.507	STANDARD ROAD PLAN	SW-507 SHEET 1 of 2

REVISIONS: Added Class I Bedding Material and changed maximum box out length to 17'.

SUDAS DIRECTOR — DESIGN METHODS ENGINEER

SINGLE OPEN-THROAT CURB INTAKE, SMALL BOX

FIGURE 6010.507 SHEET 1 OF 2

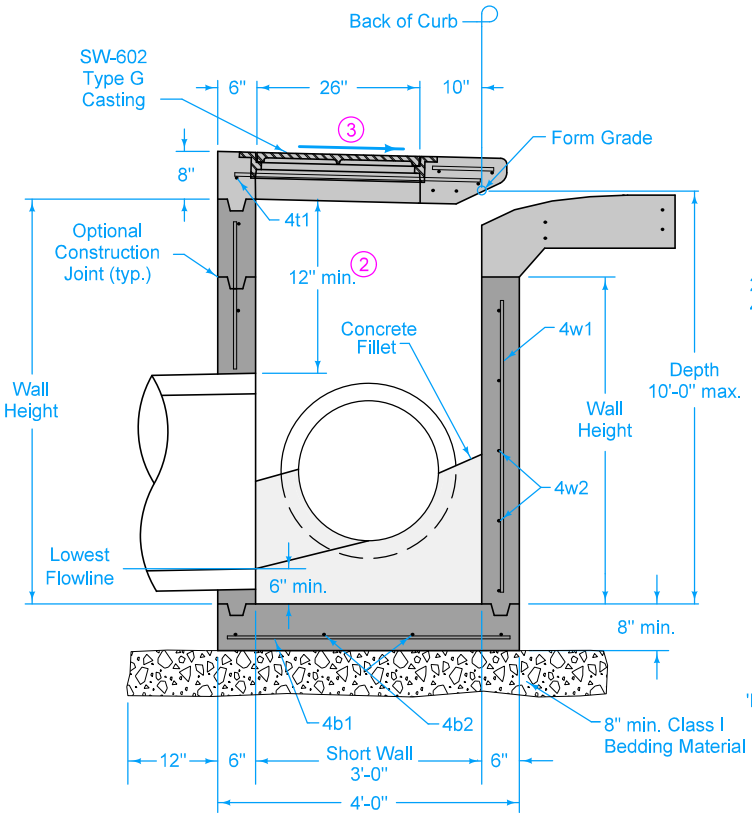

TYPICAL SECTION

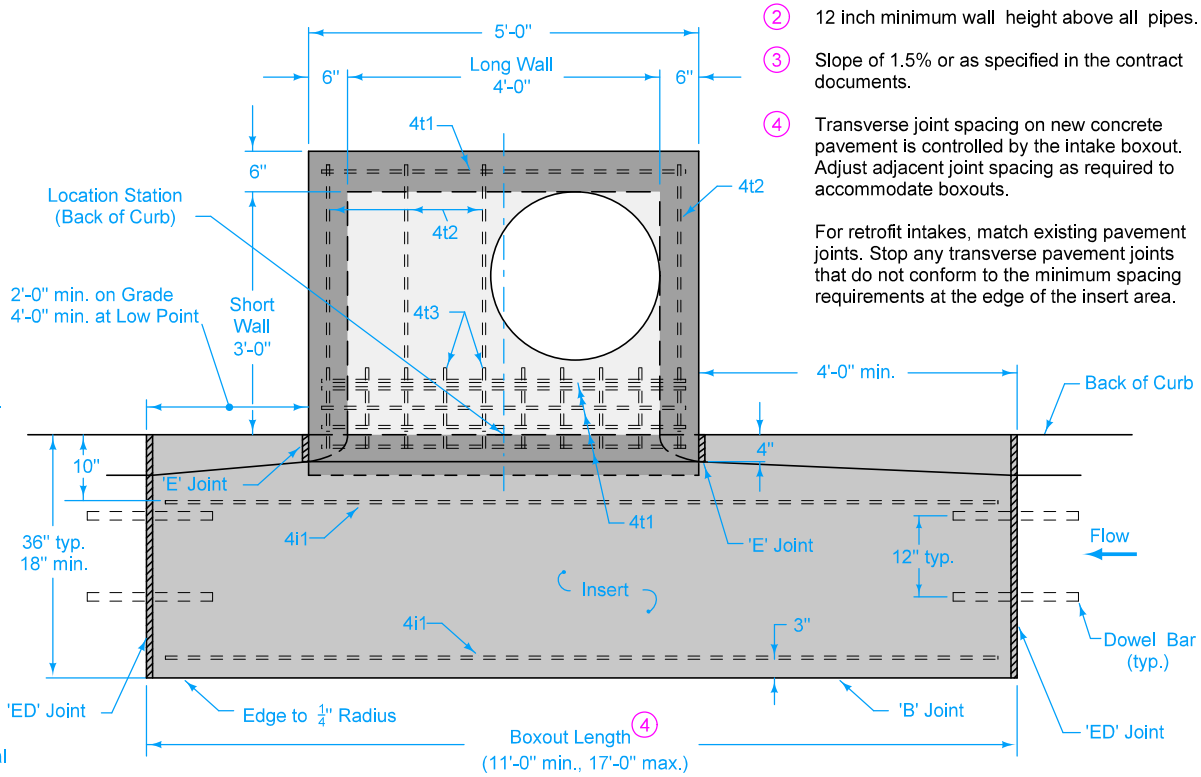

PLAN

2 12 inch minimum wall height above all pipes.

3 Slope of 1.5% or as specified in the contract documents.

4 Transverse joint spacing on new concrete pavement is controlled by the intake boxout. Adjust adjacent joint spacing as required to accommodate boxouts.

For retrofit intakes, match existing pavement joints. Stop any transverse pavement joints that do not conform to the minimum spacing requirements at the edge of the insert area.

MAXIMUM PIPE DIAMETERS		
Pipe Location	Precast Structure	Cast-in-place Structure
Short Wall	24"	30"
Long Wall	30"	36"

REINFORCING BAR LIST						
Mark	Size	Location	Shape	Count	Length	Spacing
4t1	4	Top	——	6	4'-8"	See Insert
4t2	4	Top	——	4	3'-6"	12"
4t3	4	Top	——	10	10"	6"
4b1	4	Base	——	6	3'-6"	1 1"
4b2	4	Base	——	5	4'-6"	10"
4i1	4	Insert	——	4	Boxout Length minus 8"	See Plan
4w1	4	Walls	——	14	Wall Height minus 4"	14"
4w2	4	Long Walls	——	Varies	4'-8"	12"
4w3	4	Short Walls	——	Varies	3'-8"	12"

SUDAS | IOWA DOT

REVISION 4 04-21-20

FIGURE 6010.507 | STANDARD ROAD PLAN | SW-507

SHEET 2 of 2

REVISIONS: Added Class I Bedding Material and changed maximum box out length to 17'.

SUDAS DIRECTOR | DESIGN METHODS ENGINEER

SINGLE OPEN-THROAT CURB INTAKE, SMALL BOX

FIGURE 6010.507 SHEET 2 OF 2

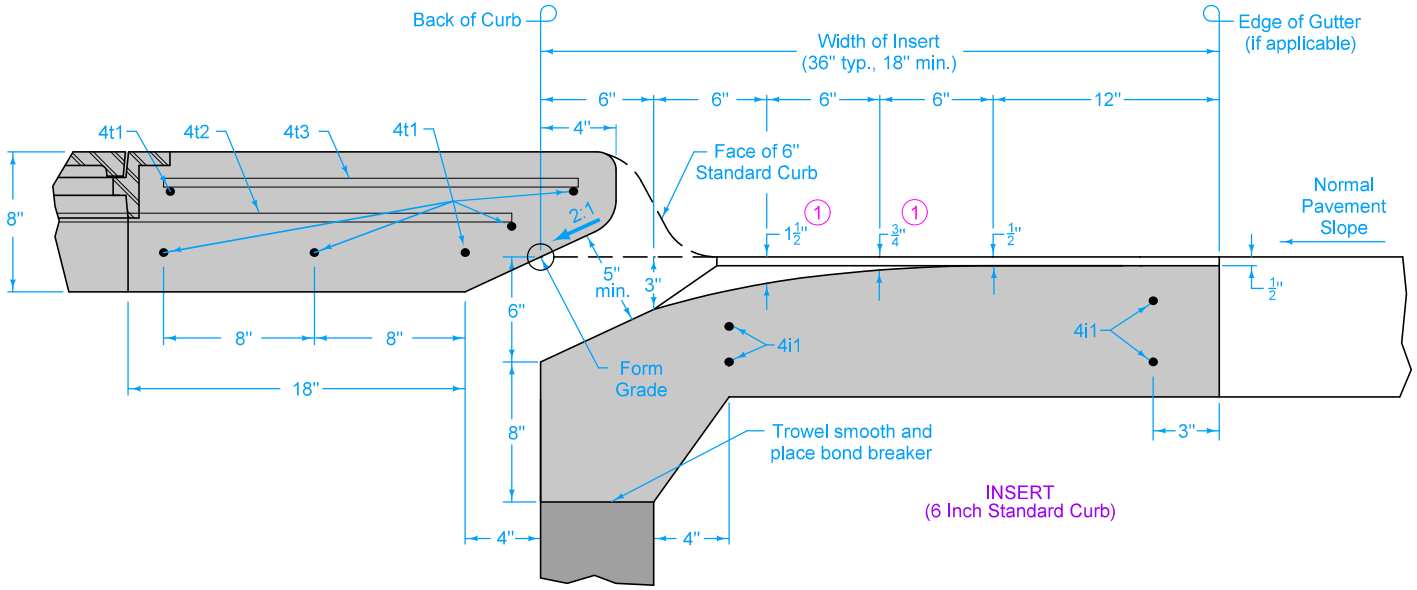

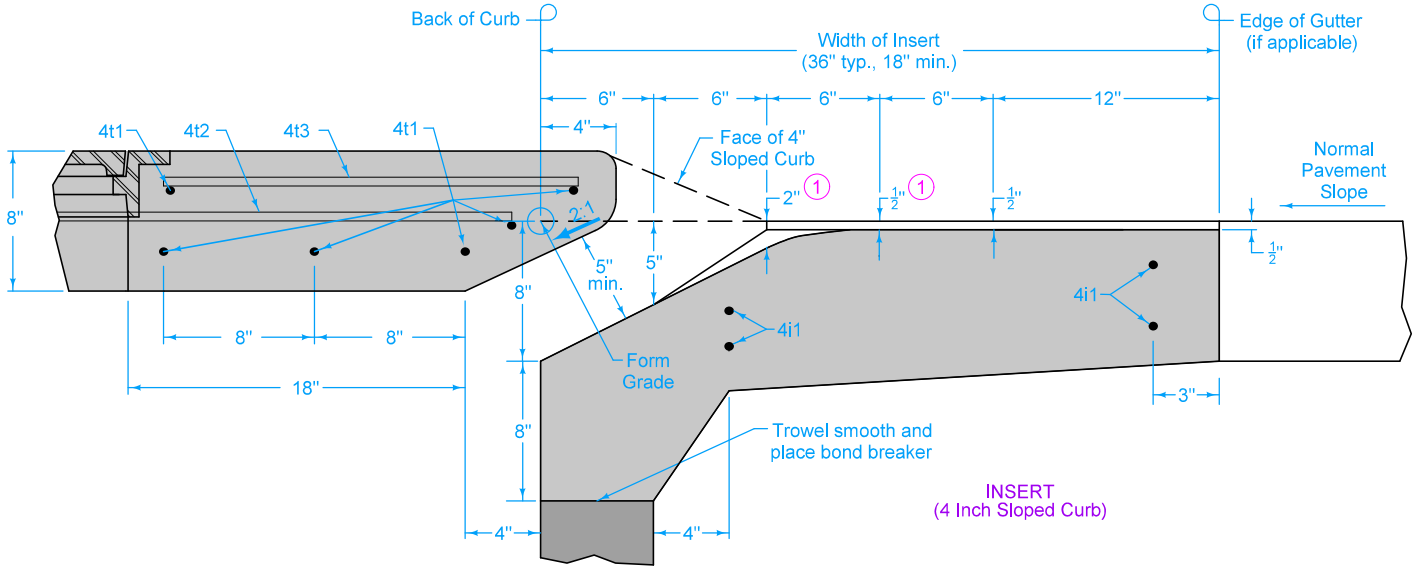

1 Insert shaping may be modified for insert widths less than 36 inches. For an 18 inch insert, reduce dimensions indicated by $\frac{1}{2}$ inch.

SUDAS	IOWA DOT	REVISION 4 04-21-20
FIGURE 6010.508	STANDARD ROAD PLAN	SW-508 SHEET 1 of 2

REVISIONS: Added Class I Bedding Material and changed maximum box out length to 17'.

SUDAS DIRECTOR — DESIGN METHODS ENGINEER

SINGLE OPEN-THROAT CURB INTAKE, LARGE BOX

FIGURE 6010.508 SHEET 1 OF 2

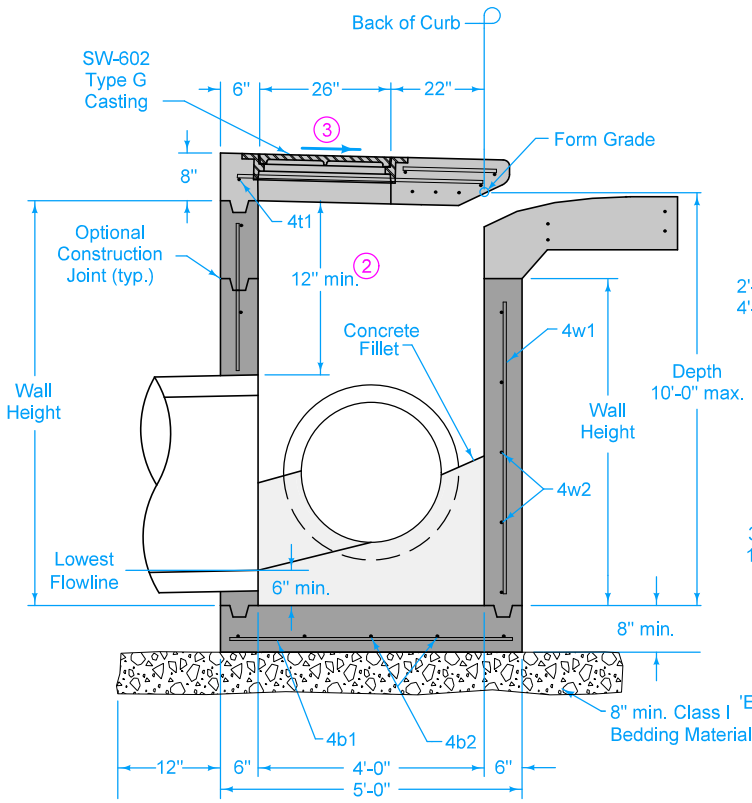

TYPICAL SECTION

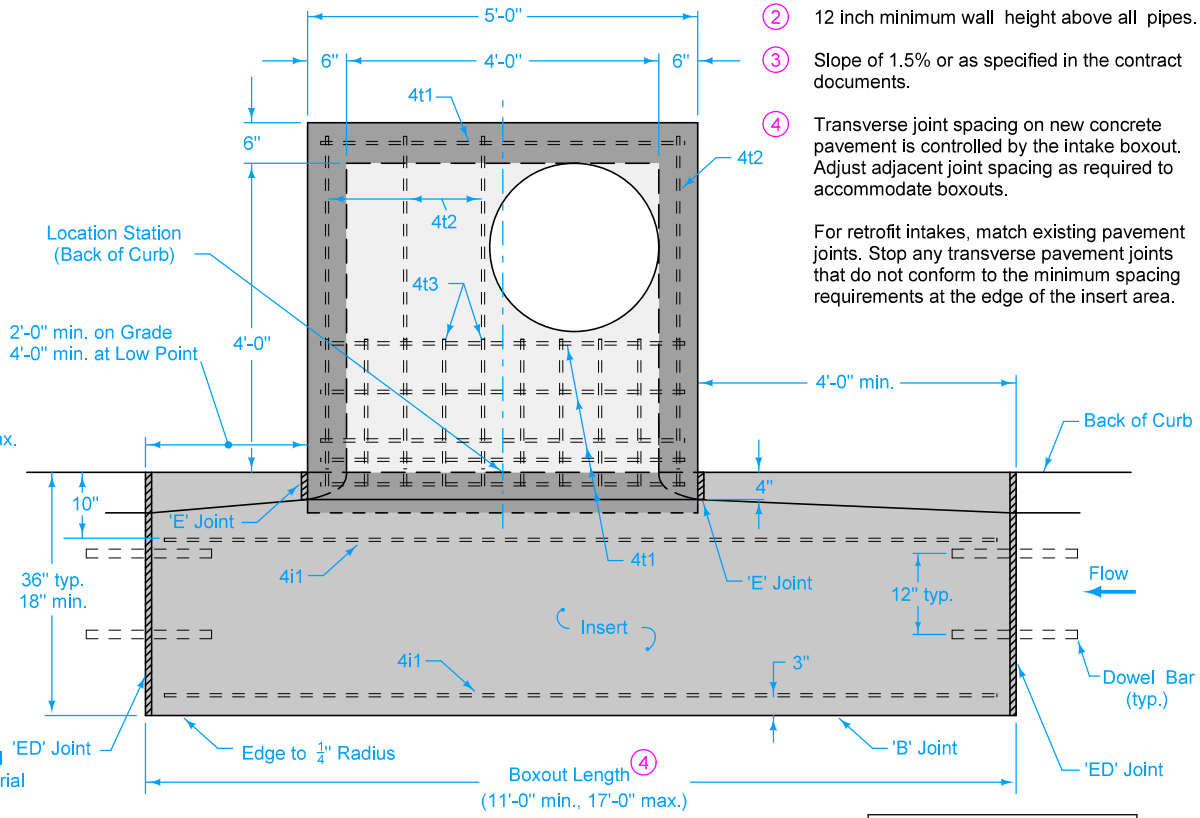

PLAN

2 12 inch minimum wall height above all pipes.

3 Slope of 1.5% or as specified in the contract documents.

4 Transverse joint spacing on new concrete pavement is controlled by the intake boxout. Adjust adjacent joint spacing as required to accommodate boxouts.

For retrofit intakes, match existing pavement joints. Stop any transverse pavement joints that do not conform to the minimum spacing requirements at the edge of the insert area.

MAXIMUM PIPE DIAMETERS	
Precast Structure	Cast-in-place Structure
30"	36"

REINFORCING BAR LIST

Mark	Size	Location	Shape	Count	Length	Spacing
4t1	4	Top	——	7	4'-8"	See Insert
4t2	4	Top	——	4	4'-6"	12"
4t3	4	Top	——	10	1'-10"	6"
4b1	4	Base	——	6	4'-6"	11"
4b2	4	Base	——	6	4'-6"	11"
4i1	4	Insert	——	4	Boxout Length minus 8"	See Plan
4w1	4	Walls	——	16	Wall Height minus 4"	14"
4w2	4	Walls	——	Varies	4'-8"	12"
4w3	4	Walls	——	Varies	4'-8"	12"

SUDAS | IOWA DOT

REVISION 4 04-21-20

FIGURE 6010.508 | STANDARD ROAD PLAN | SW-508

SHEET 2 of 2

REVISIONS: Added Class I Bedding Material and changed maximum box out length to 17'.

SUDAS DIRECTOR | DESIGN METHODS ENGINEER

SINGLE OPEN-THROAT CURB INTAKE, LARGE BOX

FIGURE 6010.508 SHEET 2 OF 2

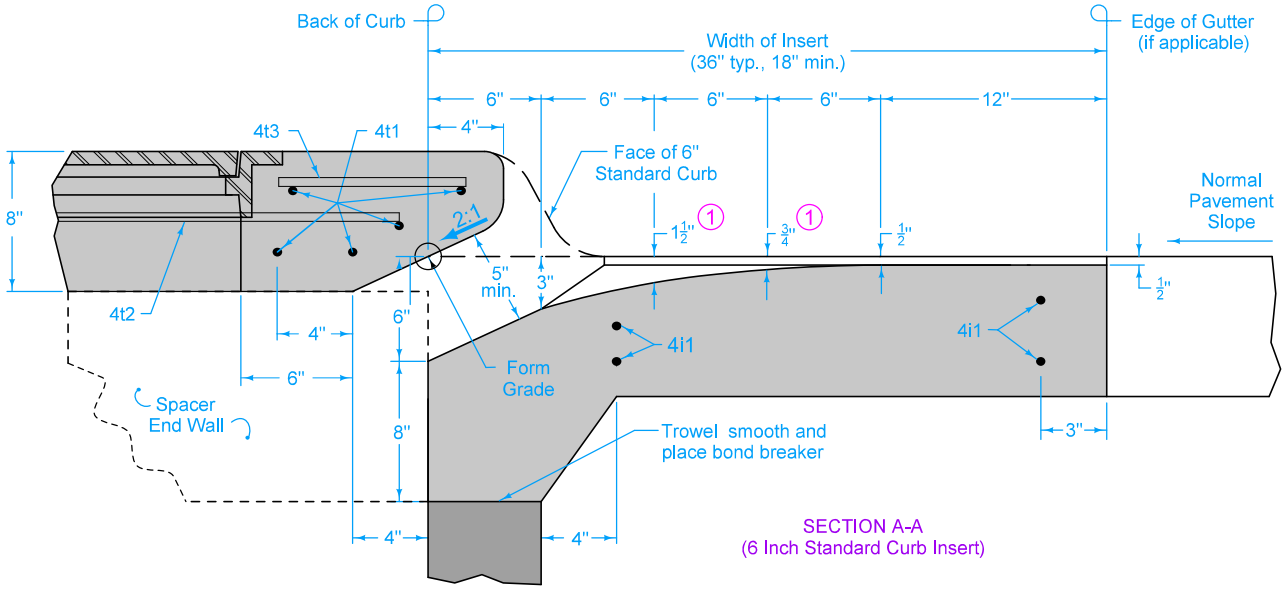

SECTION A-A
(6 Inch Standard Curb Insert)

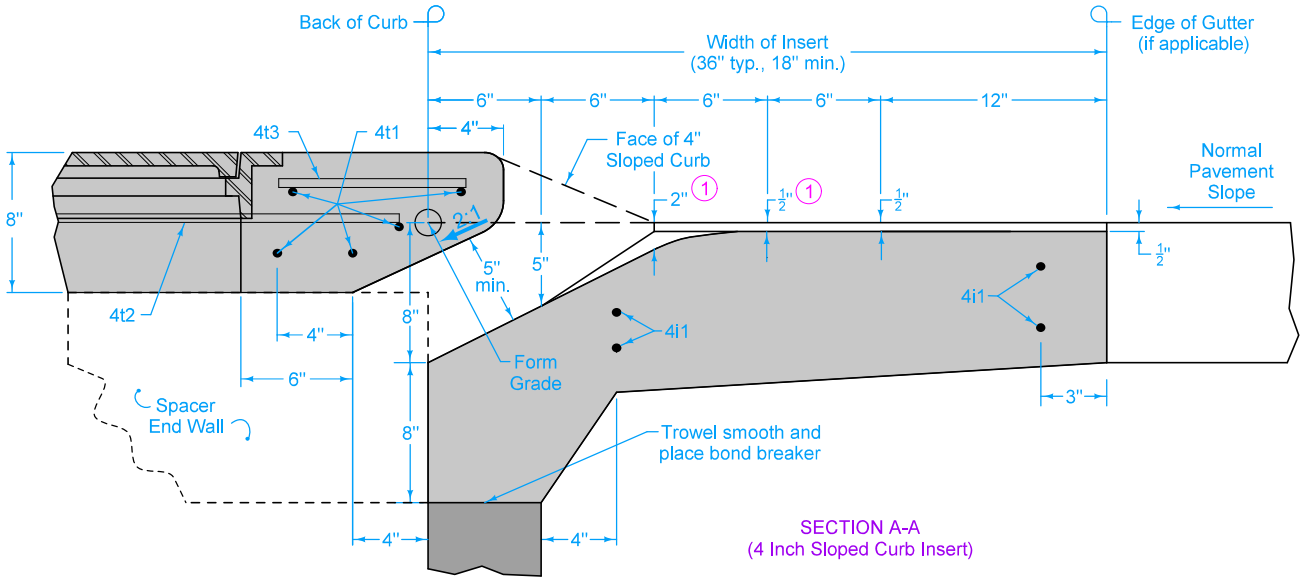

SECTION A-A
(4 Inch Sloped Curb Insert)

(1) Insert shaping may be modified for insert widths less than 36 inches. For an 18 inch insert, reduce dimensions indicated by $\frac{1}{4}$ inch.

SUDAS	IOWA DOT	REVISION 6 04-21-20
FIGURE 6010.509	STANDARD ROAD PLAN	SW-509 SHEET 1 of 3

REVISIONS: Added Class I Bedding Material and changed maximum box out length to 17'.

SUDAS DIRECTOR — DESIGN METHODS ENGINEER

DOUBLE OPEN-THROAT CURB INTAKE, SMALL BOX

FIGURE 6010.509 SHEET 1 OF 3

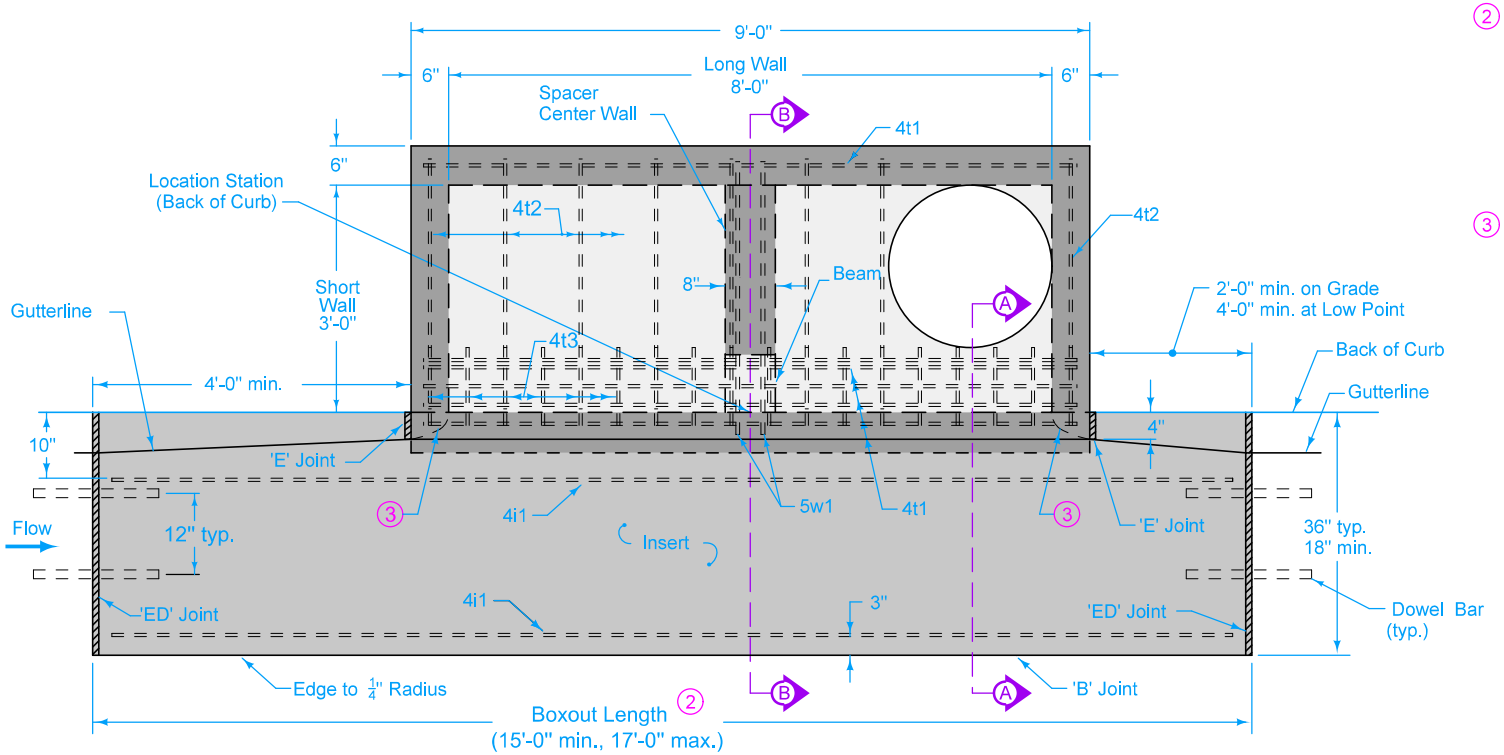

PLAN

2 Transverse joint spacing on new concrete pavement is controlled by the intake boxout. Adjust adjacent joint spacing as required to accommodate boxouts.

For retrofit intakes, match existing pavement joints. Stop any transverse pavement joints that do not conform to the minimum spacing requirements at the edge of the insert area.

3 Rounded shaping at inlet.

REINFORCING BAR LIST						
Mark	Size	Location	Shape	Count	Length	Spacing
4b1	4	Base	——	9	3'-6"	12"
4b2	4	Base	——	5	8'-6"	10"
4i1	4	Insert	——	4	Boxout Length minus 8"	See Insert
4t1	4	Top	——	6	8'-6"	See Plan
4t2	4	Top	——	8	3'-6"	12"
4t3	4	Top	——	18	10"	6"
4w1	4	Walls	——	22	Wall Height minus 4"	13"
4w2	4	Long Walls	——	Varies	4'-8"	12"
4w3	4	Short Walls	——	Varies	3'-8"	12"
5w1	5	Beam	⌐	2	7'-3"	4"

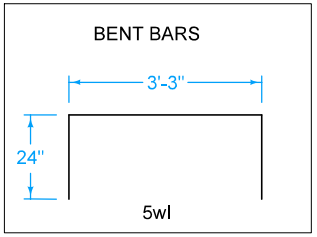

SUDAS | IOWA DOT

REVISION 6 04-21-20

FIGURE 6010.509 | STANDARD ROAD PLAN | SW-509

SHEET 2 of 3

REVISIONS: Added Class I Bedding Material and changed maximum box out length to 17'.

SUDAS DIRECTOR | DESIGN METHODS ENGINEER

DOUBLE OPEN-THROAT CURB INTAKE, SMALL BOX

FIGURE 6010.509 SHEET 2 OF 3

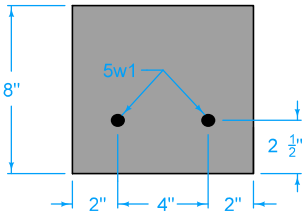

SECTION C-C

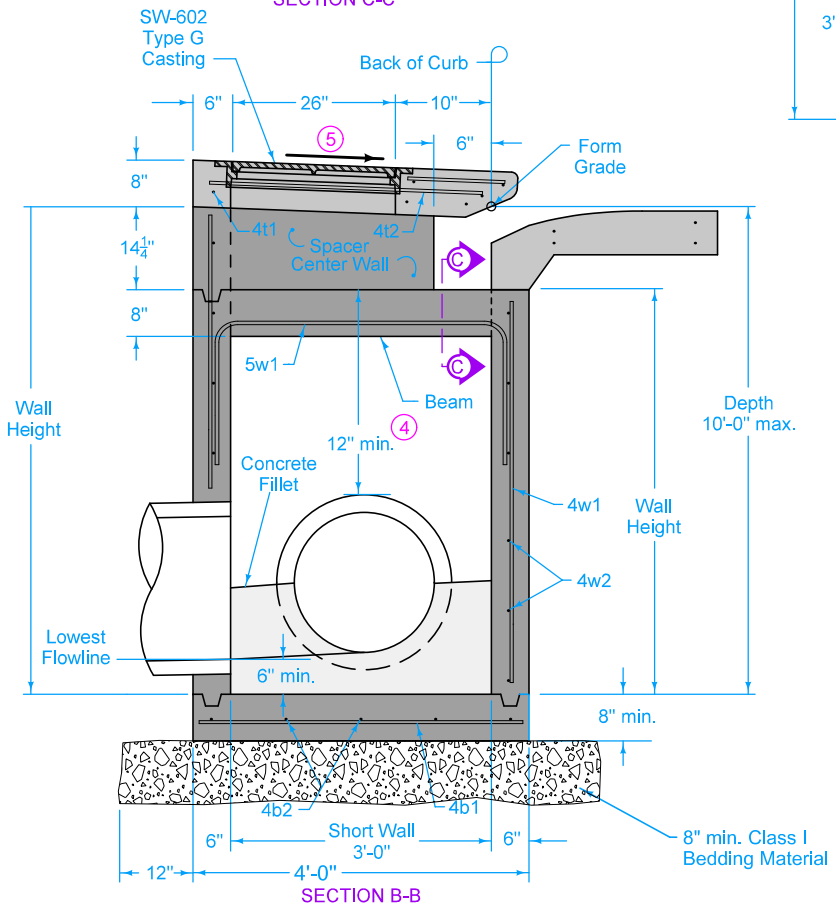

SECTION B-B

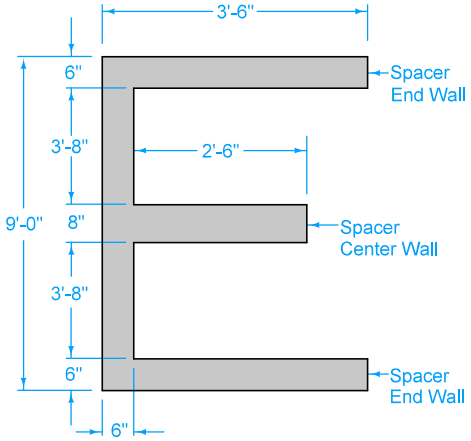

PLAN
(SPACER)

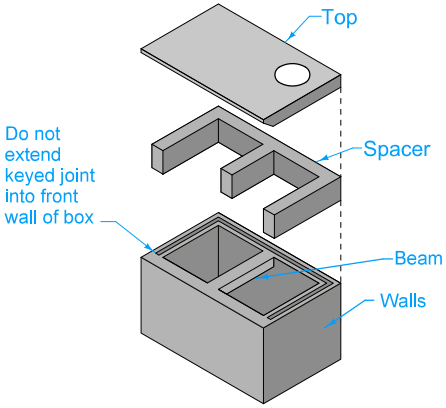

ISOMETRIC
(Refer to SECTION B-B for
alignment of Top with Spacer)

4 12 inch minimum wall height above all pipes.

5 Slope of 1.5% or as specified in the contract documents.

MAXIMUM PIPE DIAMETERS		
Pipe Location	Precast Structure	Cast-in-place Structure
Short Wall	24"	30"
Long Wall	60"	66"

SUDAS | IOWA DOT

REVISION 6 04-21-20

FIGURE 6010.509 | STANDARD ROAD PLAN | SW-509

SHEET 3 of 3

REVISIONS: Added Class I Bedding Material and changed maximum box out length to 17'.

SUDAS DIRECTOR | DESIGN METHODS ENGINEER

DOUBLE OPEN-THROAT CURB INTAKE, SMALL BOX

FIGURE 6010.509 SHEET 3 OF 3

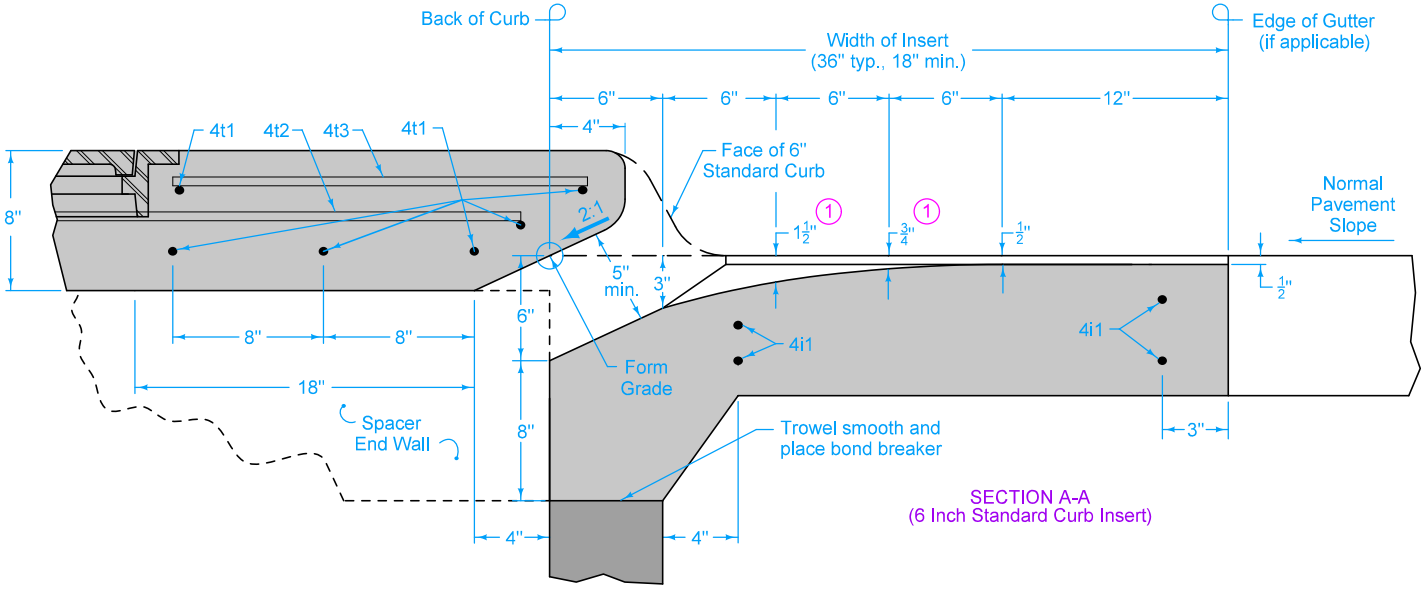

SECTION A-A
(6 Inch Standard Curb Insert)

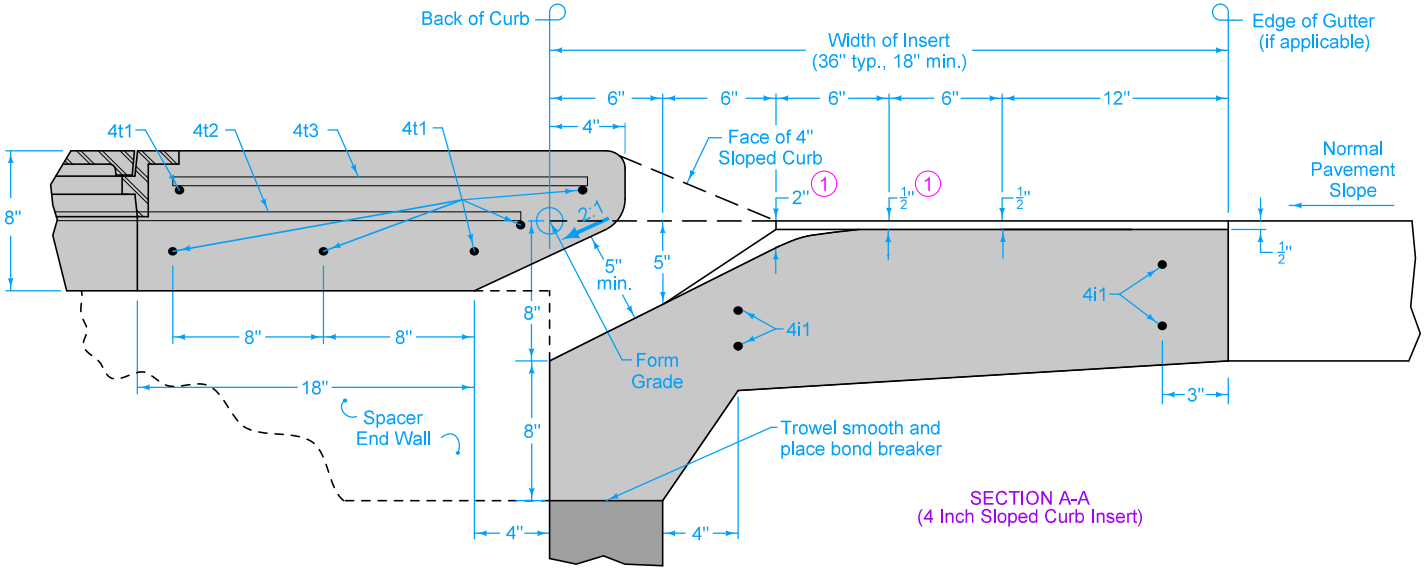

SECTION A-A
(4 Inch Sloped Curb Insert)

1 Insert shaping may be modified for insert widths less than 36 inches. For an 18 inch insert, reduce dimensions indicated by $\frac{1}{4}$ inch.

SUDAS	IOWA DOT	REVISION 6	04-21-20
FIGURE 6010.510	STANDARD ROAD PLAN	SW-510	SHEET 1 of 3

REVISIONS: Added Class I Bedding Material and changed maximum box out length to 17'.

SUDAS DIRECTOR — DESIGN METHODS ENGINEER

DOUBLE OPEN-THROAT CURB INTAKE, LARGE BOX

FIGURE 6010.510 SHEET 1 OF 3

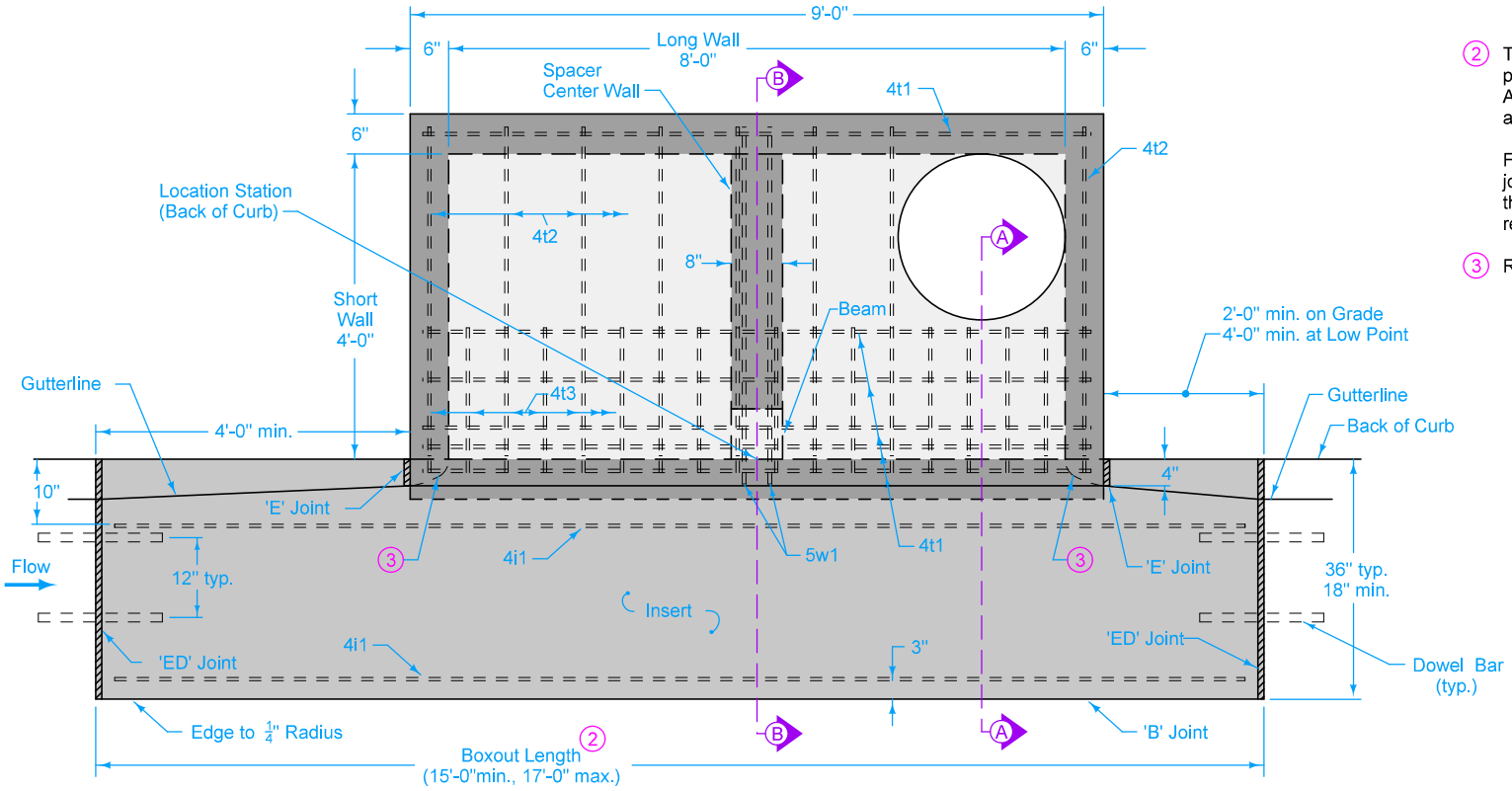

PLAN

2 Transverse joint spacing on new concrete pavement is controlled by the intake boxout. Adjust adjacent joint spacing as required to accommodate boxouts.

For retrofit intakes, match existing pavement joints. Stop any transverse pavement joints that do not conform to the minimum spacing requirements at the edge of the insert area.

3 Rounded shaping at inlet.

REINFORCING BAR LIST						
Mark	Size	Location	Shape	Count	Length	Spacing
4b1	4	Base	——	9	4'-6"	12"
4b2	4	Base	——	6	8'-6"	11"
4i1	4	Insert	——	4	Boxout Length minus 8"	See Insert
4t1	4	Top	——	7	8'-6"	See Plan
4t2	4	Top	——	8	4'-4"	12"
4t3	4	Top	——	18	1'-10"	6"
4w1	4	Walls	——	24	Wall Height minus 4"	13"
4w2	4	Long Walls	——	Varies	4'-8"	12"
4w3	4	Short Walls	——	Varies	8'-8"	12"
5w1	5	Beam	⌐	2	8'-3"	4"

BENT BARS

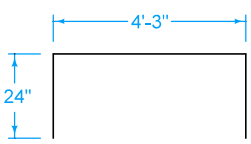

5wl

SUDAS | IOWA DOT

REVISION 6 04-21-20

FIGURE 6010.510 | STANDARD ROAD PLAN | SW-510

SHEET 2 of 3

REVISIONS: Added Class I Bedding Material and changed maximum box out length to 17'.

SUDAS DIRECTOR | DESIGN METHODS ENGINEER

DOUBLE OPEN-THROAT CURB INTAKE, LARGE BOX

FIGURE 6010.510 SHEET 2 OF 3

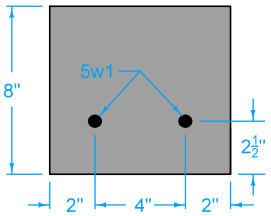

SECTION C-C

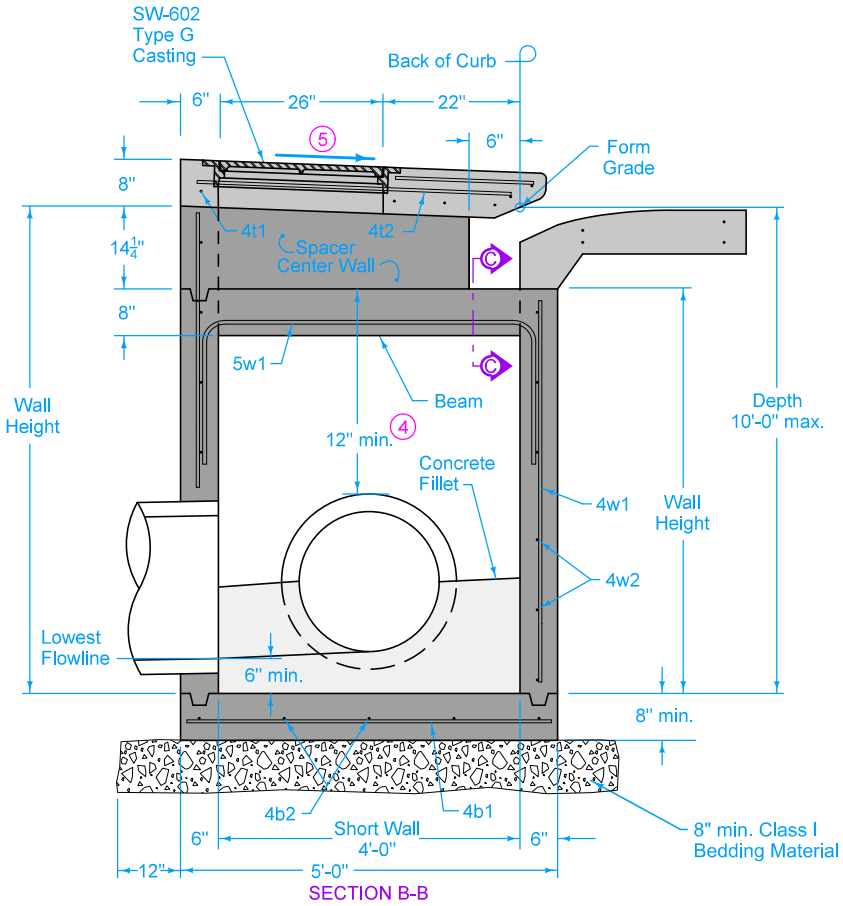

SECTION B-B

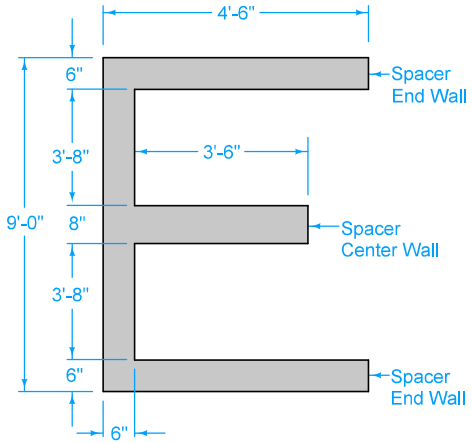

PLAN
(SPACER)

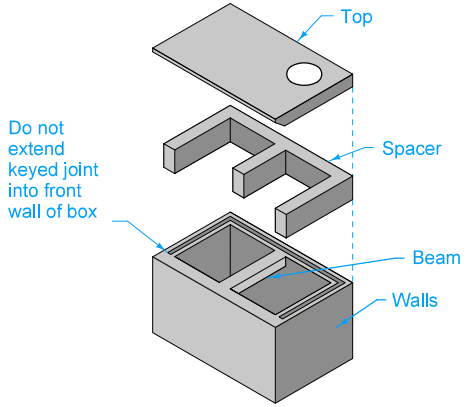

ISOMETRIC
(Refer to Section B-B
for alignment of Top
with Spacer)

4 12 inch minimum wall height above all pipes.

5 Slope of 1.5% or as specified in the contract documents.

MAXIMUM PIPE DIAMETERS		
Pipe Location	Precast Structure	Cast-in-place Structure
Short Wall	30"	36"
Long Wall	60"	66"

SUDAS | IOWA DOT

REVISION 6 04-21-20

FIGURE 6010.510 | STANDARD ROAD PLAN | SW-510

SHEET 3 of 3

REVISIONS: Added Class I Bedding Material and changed maximum box out length to 17'.

SUDAS DIRECTOR | DESIGN METHODS ENGINEER

DOUBLE OPEN-THROAT CURB INTAKE, LARGE BOX

FIGURE 6010.510 SHEET 3 OF 3

1. Install four #4 diagonal bars at all pipe openings.
2. Cast-in-place base shown. If base is precast integral with walls, the footprint of the base is not required to extend beyond the outer edge of the walls.
3. 12 inch minimum wall height above all pipes.

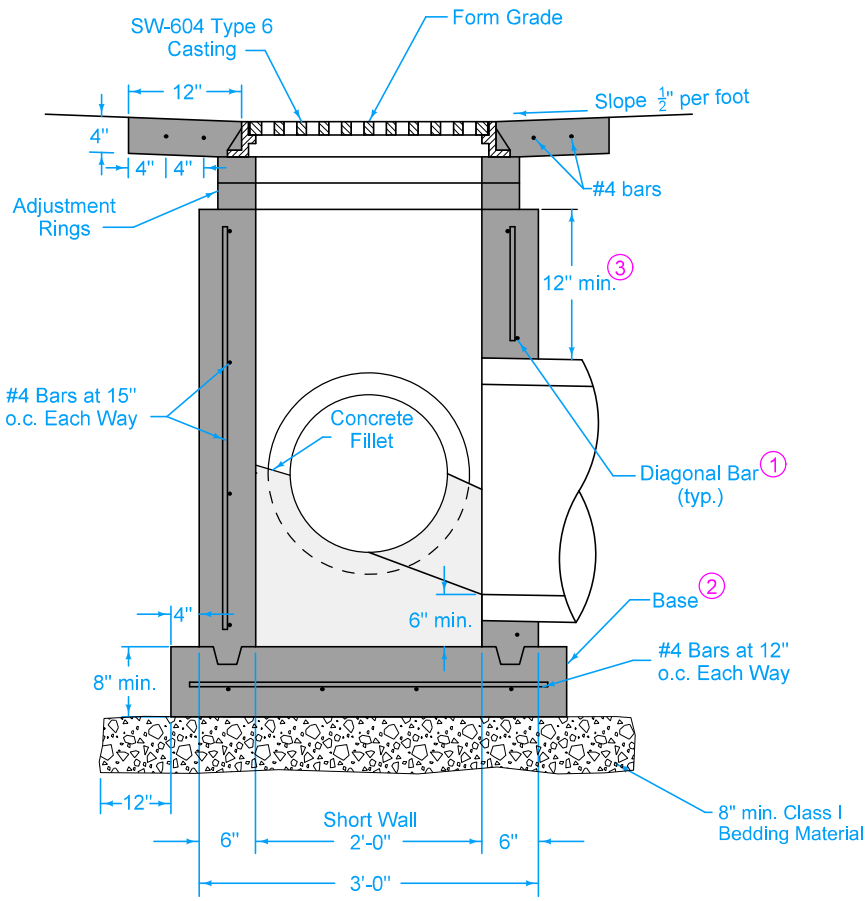

SECTION A-A

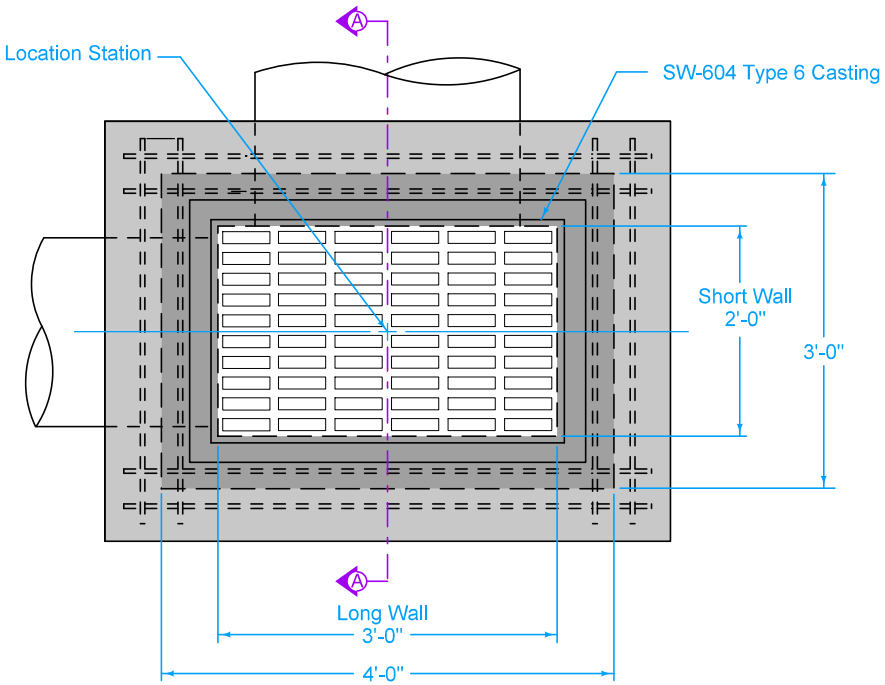

PLAN

MAXIMUM PIPE DIAMETERS		
Pipe Location	Precast Structure	Cast-in-place Structure
Short Wall	15"	18"
Long Wall	24"	30"

SUDAS | IOWA DOT

REVISION	
2	04-21-20

FIGURE 6010.511 | STANDARD ROAD PLAN | SW-511 | SHEET 1 of 1

REVISIONS: Added Class I Bedding Material.

SUDAS DIRECTOR | DESIGN METHODS ENGINEER

RECTANGULAR AREA INTAKE

FIGURE 6010.511 | SHEET 1 OF 1

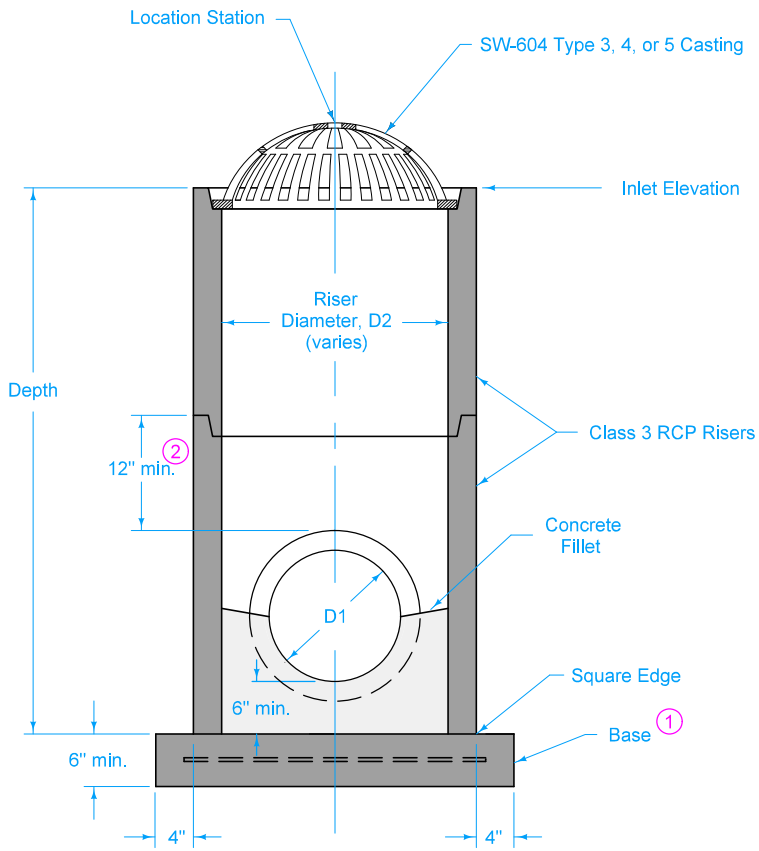

TYPICAL SECTION

CASE 1

1 Precast (shown) or cast-in-place base:

- Precast: 6 inch thick concrete with #6 welded wire mesh on 4 inch centers (WWF 4" x 4"). Center mesh vertically within base.
- Cast-in-place: 8 inch thick non-reinforced concrete.

2 12 inch minimum riser height above all pipes.

INTAKE SIZE - CASE 1	
Outlet Pipe Diameter, D1	Minimum Riser Diameter, D2
12"	18"
15"	24"
18"	24"
21"	30"
24"	30"
27"	36"

SUDAS | IOWA DOT

REVISION 4 04-21-20

FIGURE 6010.512 | STANDARD ROAD PLAN | SW-512

SHEET 1 of 2

REVISIONS: Changed 1 to I on Bedding Material.

SUDAS DIRECTOR | DESIGN METHODS ENGINEER

CIRCULAR AREA INTAKE

FIGURE 6010.512 SHEET 1 OF 2

③ Minimum riser diameter is 18 inches.

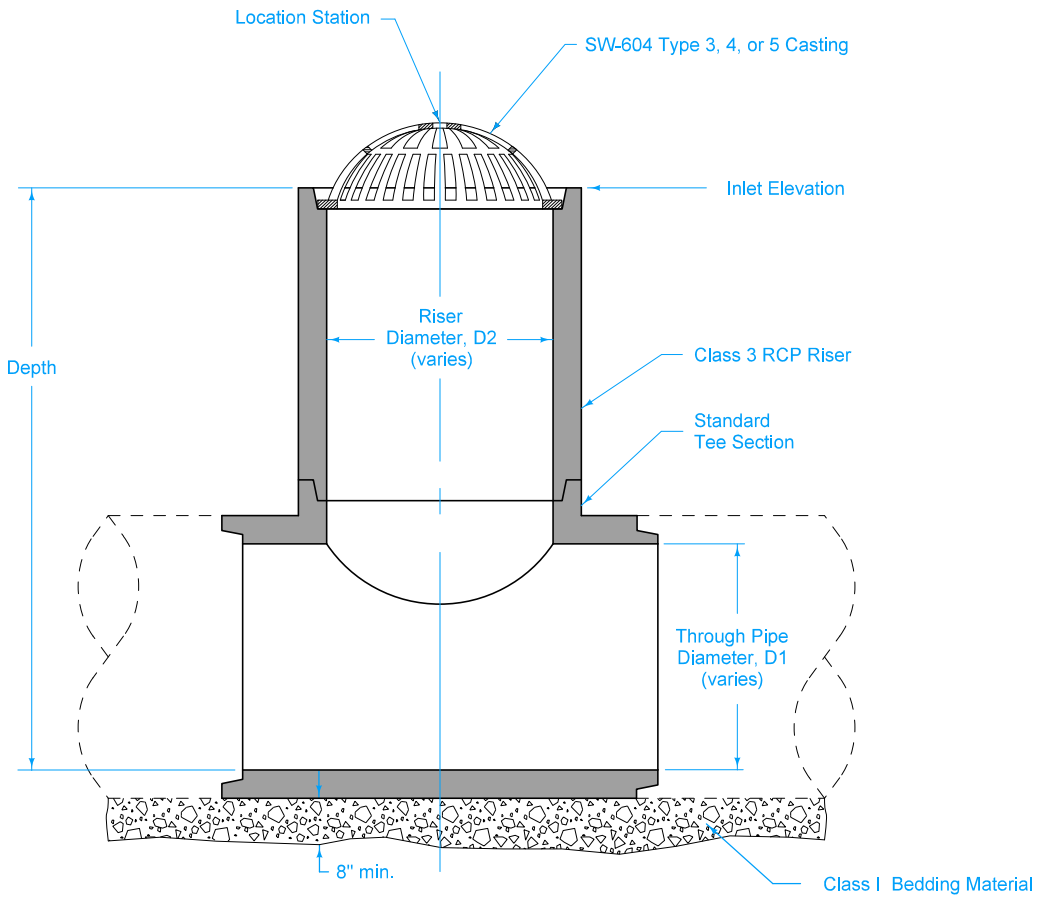

TYPICAL SECTION

CASE 2

INTAKE SIZE - CASE 2	
Through Pipe Diameter, D1	Maximum ③ Riser Diameter, D2
18"	18"
21"	18"
24"	24"
27"	24"
30"	30"
36" or more	36"

SUDAS | IOWA DOT | REVISION 4 04-21-20

FIGURE 6010.512 | STANDARD ROAD PLAN | SW-512 | SHEET 2 of 2

REVISIONS: Changed 1 to I on Bedding Material.

Paul D. Wiegand — SUDAS DIRECTOR
Steven Nichols — DESIGN METHODS ENGINEER

CIRCULAR AREA INTAKE

FIGURE 6010.512 SHEET 2 OF 2

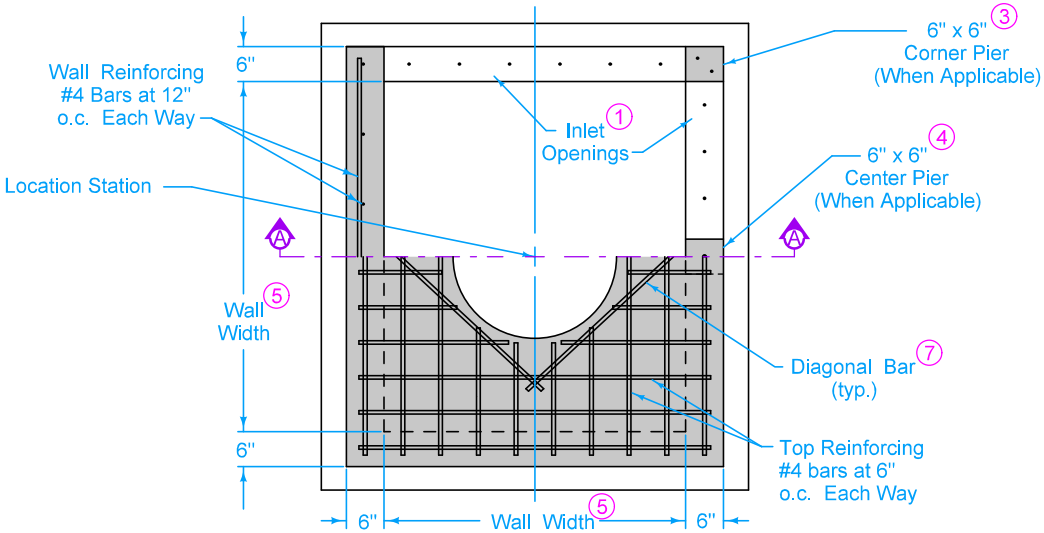

PLAN

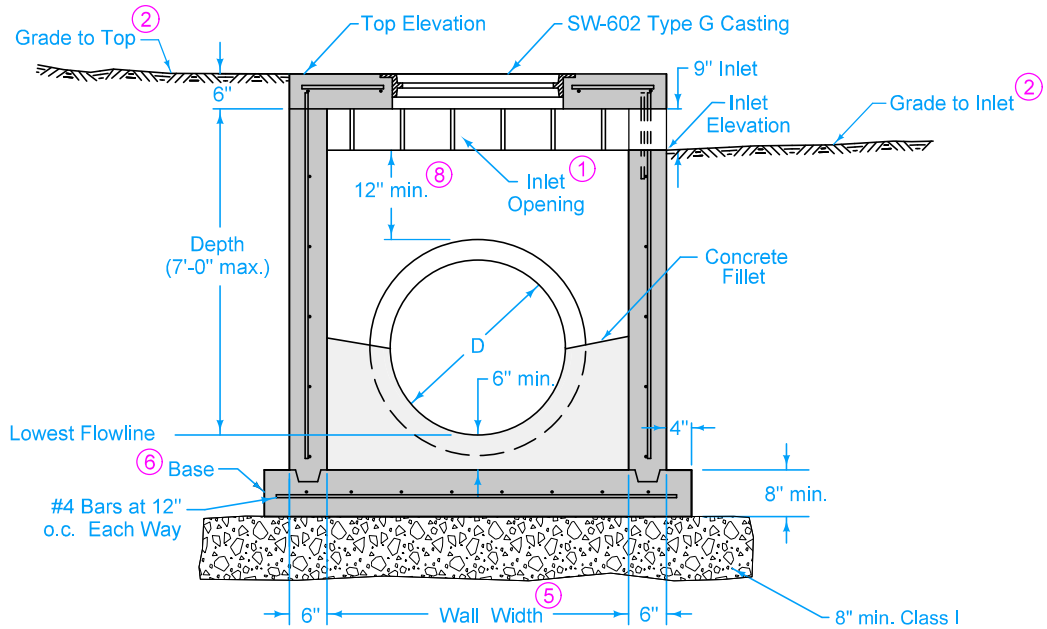

SECTION A-A

Structure may be built with openings on any or all sides. Provide openings and orientation as specified in the contract documents.

Adjacent walls may have different widths based upon pipe configuration, but structure must be rectangular.

① Construct inlet openings with 15-inch #4 epoxy-coated bars at 8 inches on center. Embed bars a minimum of 3 inches into walls and top at all openings.

② Grade to inlet elevation on open sides. Grade to top elevation on closed sides.

③ Corner pier required between openings of two adjacent walls. Extend wall reinforcing vertically through pier. Install one additional 15-inch #4 bar in pier.

④ Center pier required at center of any inlet opening with length of 5 feet or greater. Extend wall reinforcing vertically through pier. Install one additional 15-inch #4 bar in pier.

⑤ Wall widths vary with pipe diameter. Provide 6 inches of wall width (minimum) each side of pipe opening. Minimum wall width is 36 inches. Maximum wall width is 72 inches.

⑥ Cast-in-place base shown. If base is precast integral with walls, the footprint of base is not required to extend beyond the outer edge of the walls.

⑦ Install four #4 diagonal bars at all pipe openings.

⑧ 12" minimum wall height above all pipes.

SUDAS	IOWA DOT	REVISION 2 04-21-20
FIGURE 6010.513	STANDARD ROAD PLAN	SW-513 SHEET 1 of 1

REVISIONS: Added Class I Bedding Material.

SUDAS DIRECTOR — DESIGN METHODS ENGINEER

OPEN-SIDED AREA INTAKE

FIGURE 6010.513 SHEET 1 OF 1

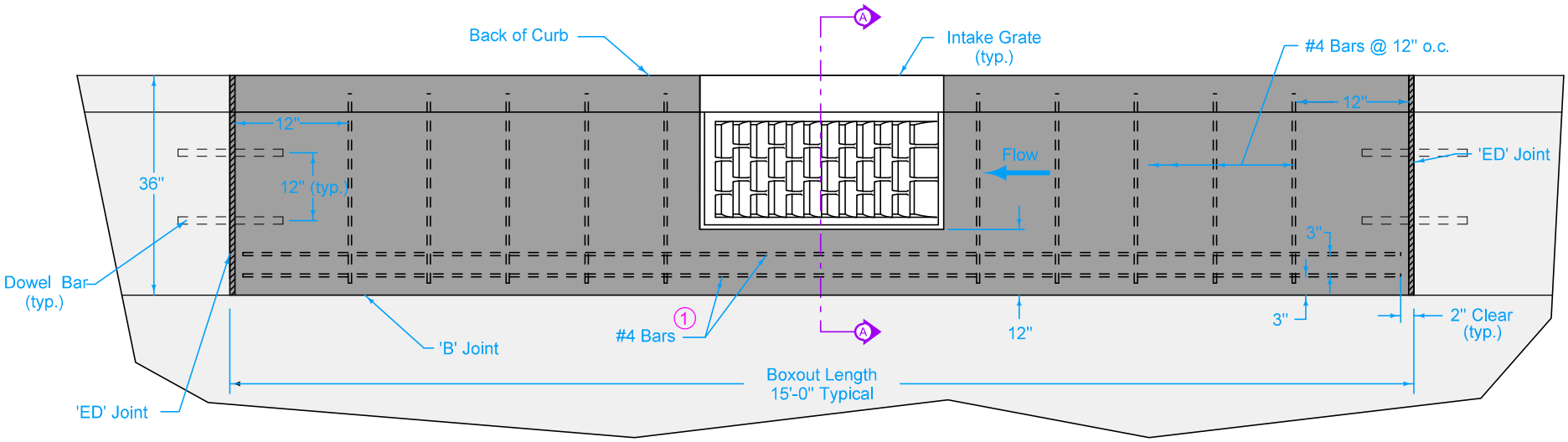

BOXOUT IN PCC PAVEMENT AND PCC BASE WITH HMA OVERLAY

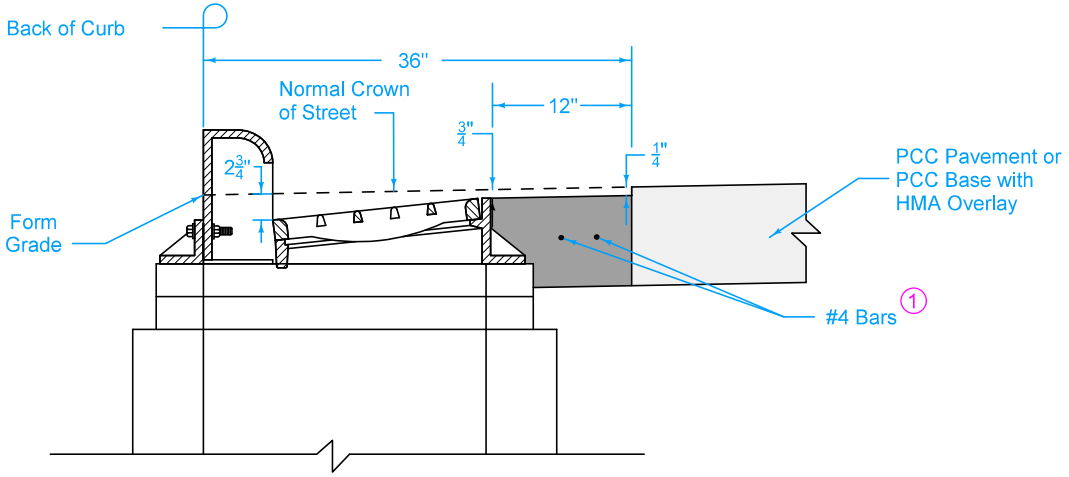

SECTION A-A

Transverse joint spacing on new concrete pavement is controlled by the intake boxout. Adjust adjacent joint spacing as required to accommodate boxouts.

For retrofit intakes, match existing concrete pavement joints. Stop any transverse pavement joints that do not conform to the minimum spacing requirements at the edge of the boxout.

1 Center bars vertically within slab.

SUDAS	IOWA DOT	REVISION 1 04-17-18
FIGURE 6010.514	STANDARD ROAD PLAN	SW-514 SHEET 1 of 3

REVISIONS: Added dimension to back of grate. Updated line work and Iowa DOT and SUDAS logo.

Paul D. Wiegand — SUDAS DIRECTOR
Brian Smith — DESIGN METHODS ENGINEER

BOXOUT FOR GRATE INTAKES

FIGURE 6010.514 SHEET 1 OF 3

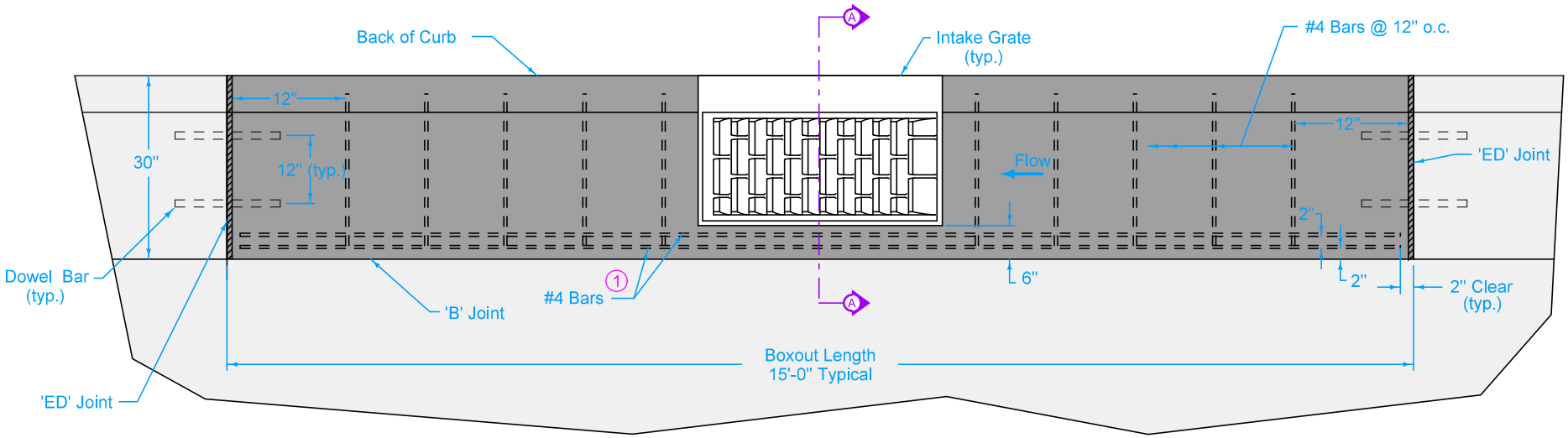

BOXOUT IN PCC CURB AND GUTTER

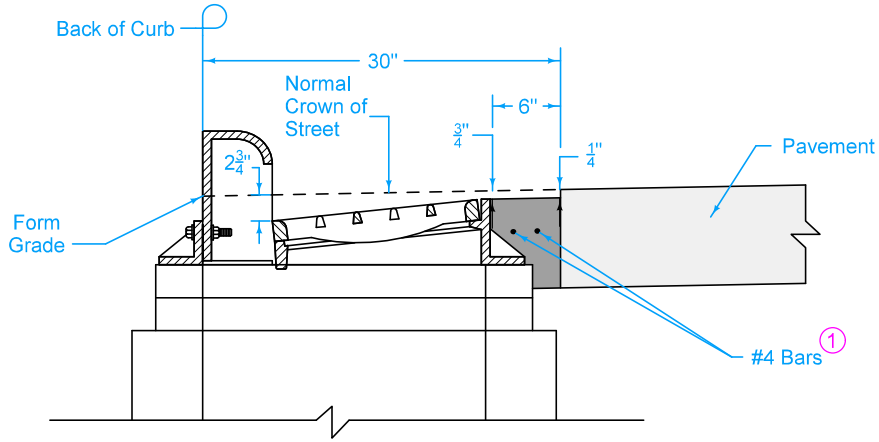

SECTION A-A

1 Center bars vertically within slab.

SUDAS	IOWA DOT	REVISION 1 04-17-18
FIGURE 6010.514	STANDARD ROAD PLAN	SW-514 SHEET 2 of 3

REVISIONS: Added dimension to back of grate. Updated line work and Iowa DOT and SUDAS logo.

Paul D. Wiegand — SUDAS DIRECTOR
Brian Smith — DESIGN METHODS ENGINEER

BOXOUT FOR GRATE INTAKES

FIGURE 6010.514 SHEET 2 OF 3

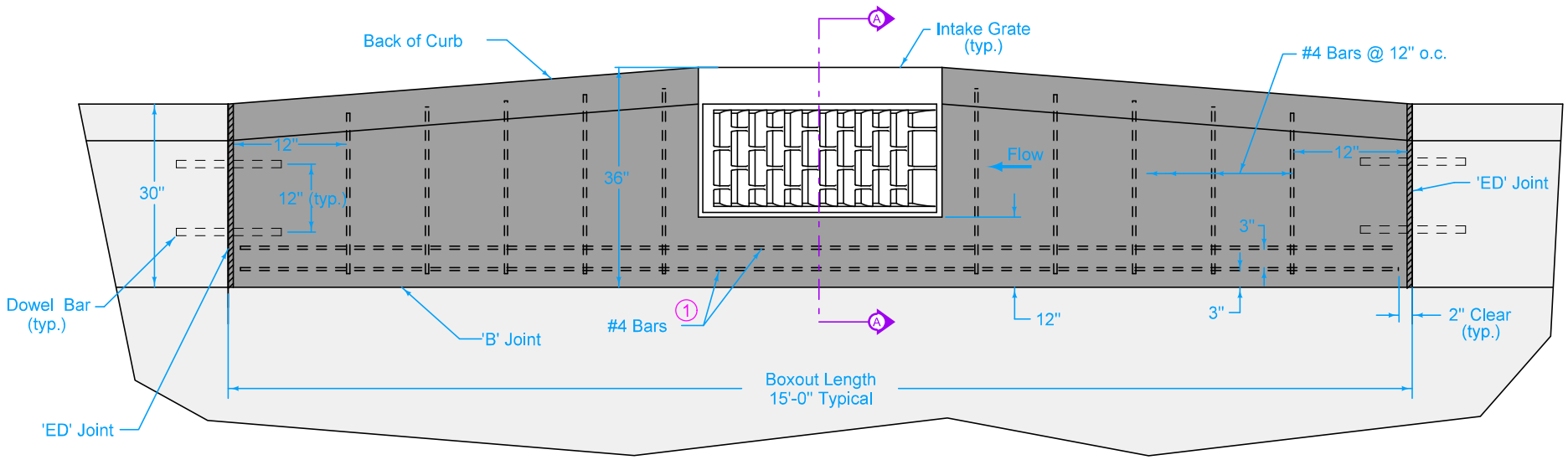

ALTERNATE BOXOUT IN PCC CURB AND GUTTER

Transverse joint spacing on new concrete pavement is controlled by the intake boxout. Adjacent joint spacing may need to be field adjusted to fit boxouts.

For retrofit intakes, match existing concrete pavement joints. Stop any transverse pavement joints that do not conform to the minimum spacing requirements at the edge of the boxout.

(1) Center bars vertically within slab.

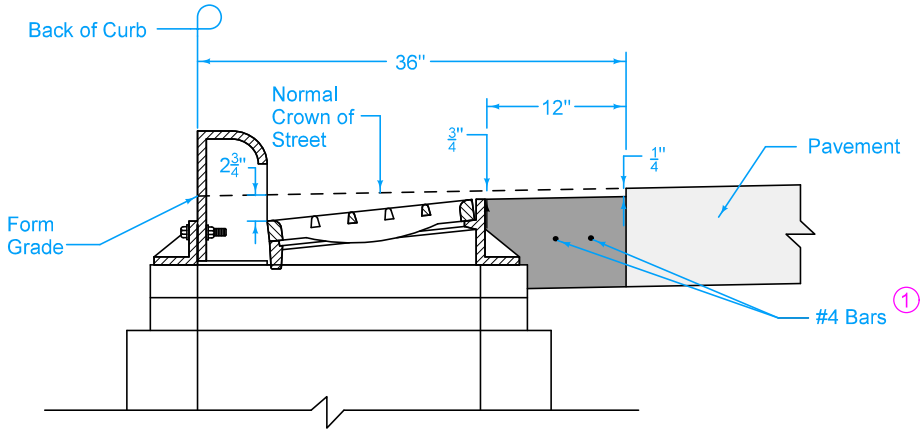

SECTION A-A

SUDAS	IOWA DOT	REVISION 1 04-17-18
FIGURE 6010.514	STANDARD ROAD PLAN	SW-514 SHEET 3 of 3

REVISIONS: Added dimension to back of grate. Updated line work and Iowa DOT and SUDAS logo.

Paul D. Wiegand — SUDAS DIRECTOR
Brian Smith — DESIGN METHODS ENGINEER

BOXOUT FOR GRATE INTAKES

FIGURE 6010.514 SHEET 3 OF 3

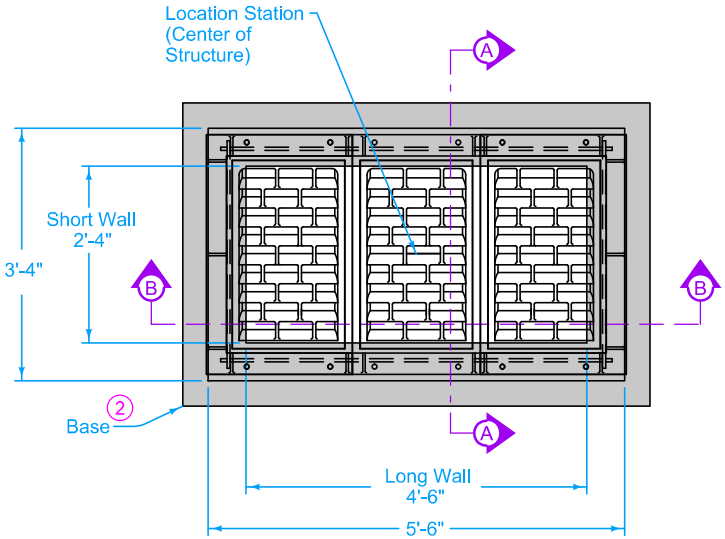

PLAN

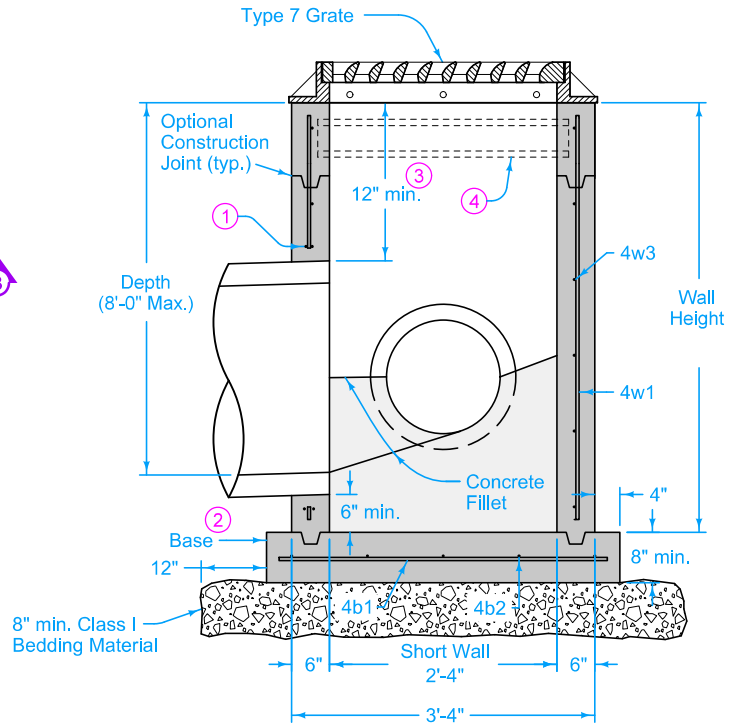

SECTION A-A

1. Provide two #4 hoop bars at all pipe openings.
2. Cast-in-place base shown. If base is precast integral with walls, the footprint of the base is not required to extend beyond the outer edge of the walls.
3. 12 inch minimum wall height above all pipes.
4. If required by casting manufacturer, provide support beam under all frame joints. Modify structure walls as required to provide pocket for beam.

SUDAS	IOWA DOT	REVISION	
		New	04-21-20
FIGURE 6010.515	STANDARD ROAD PLAN	SW-515	
		SHEET 1 of 2	

REVISIONS: New.

Paul D. Wiegand — SUDAS DIRECTOR
Stuart Nielsen — DESIGN METHODS ENGINEER

TRIPLE RECTANGULAR AREA INTAKE

FIGURE 6010.515 | SHEET 1 OF 2

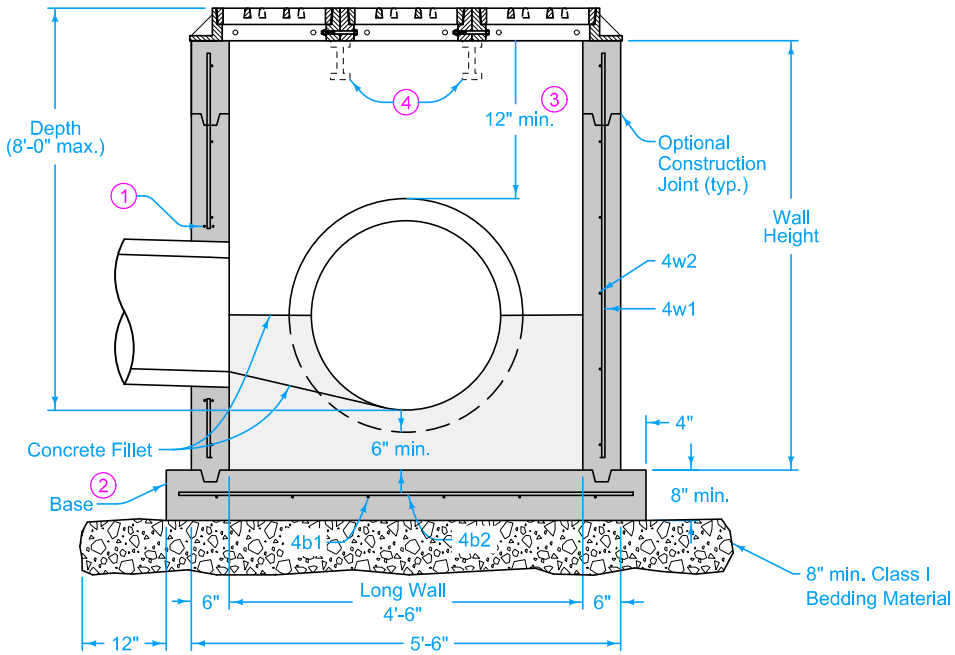

SECTION B-B

1. Provide two #4 hoop bars at all pipe openings.
2. Cast-in-place base shown. If base is precast integral with walls, the footprint of the base is not required to extend beyond the outer edge of the walls.
3. 12 inch minimum wall height above all pipes.
4. If required by casting manufacturer, provide support beam under all frame joints. Modify structure walls as required to provide pocket for beam.

MAXIMUM PIPE DIAMETERS		
Pipe Location	Precast Structure	Cast-in-place Structure
Short Wall	18"	21"
Long Wall	36"	42"

REINFORCING BAR LIST						
Mark	Size	Location	Shape	Count	Length	Spacing
4b1	4	Base	——	6	3'-6"	12"
4b2	4	Base	——	4	5'-8"	12"
4w1	4	Walls	——	20	Wall Height minus 4"	12"
4w2	4	Short Wall	——	Varies	3'-0"	12"
4w3	4	Long Wall	——	Varies	5'-2"	12"

SUDAS | IOWA DOT

REVISION: New 04-21-20

FIGURE 6010.515 | STANDARD ROAD PLAN | SW-515

SHEET 2 of 2

REVISIONS: New.

SUDAS DIRECTOR | DESIGN METHODS ENGINEER

TRIPLE RECTANGULAR AREA INTAKE

FIGURE 6010.515 | SHEET 2 OF 2

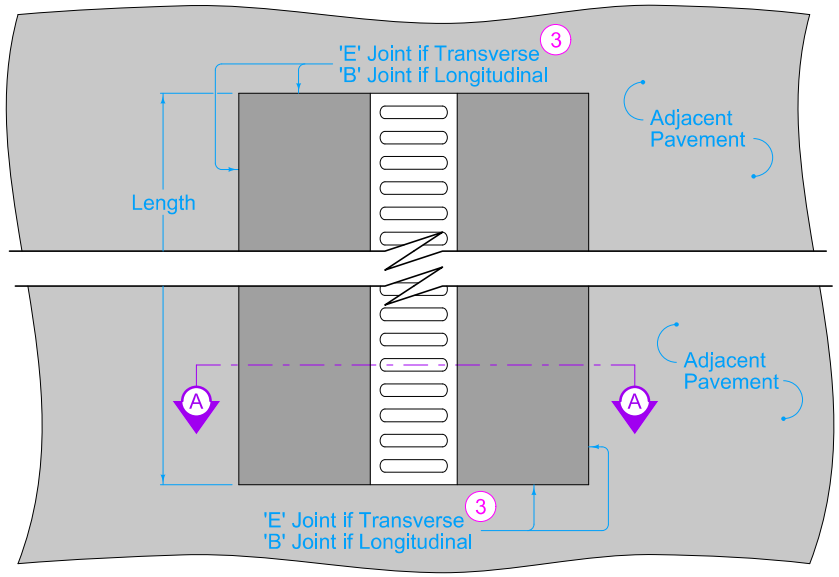

PLAN

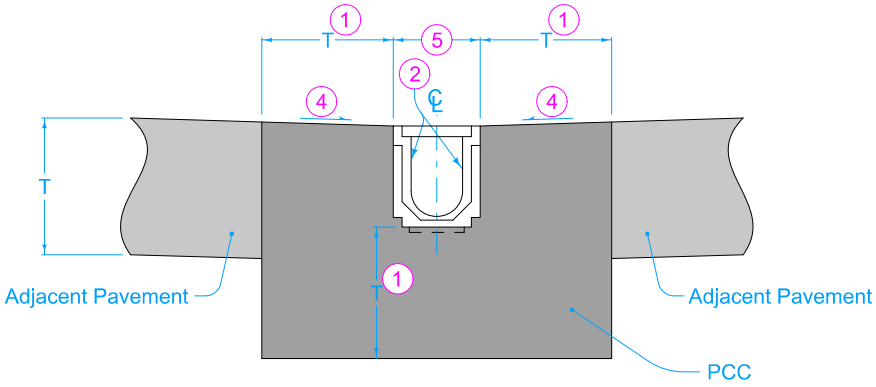

SECTION A-A

1. 6 inches or same as thickness of adjacent pavement, whichever is greater.
2. Linear Trench Drain.
3. For joint details, see PV-101.
4. Slope same as adjacent pavement.
5. Width as determined by manufacturer. Minimum 6 inches.

SUDAS	IOWA DOT	REVISION 2 04-21-20
FIGURE 6010.521	STANDARD ROAD PLAN	SW-521 SHEET 1 of 2

REVISIONS: Converted to joint standard. Modified circle note 1.

SUDAS DIRECTOR — DESIGN METHODS ENGINEER

LINEAR TRENCH DRAIN

FIGURE 6010.521 | SHEET 1 OF 2

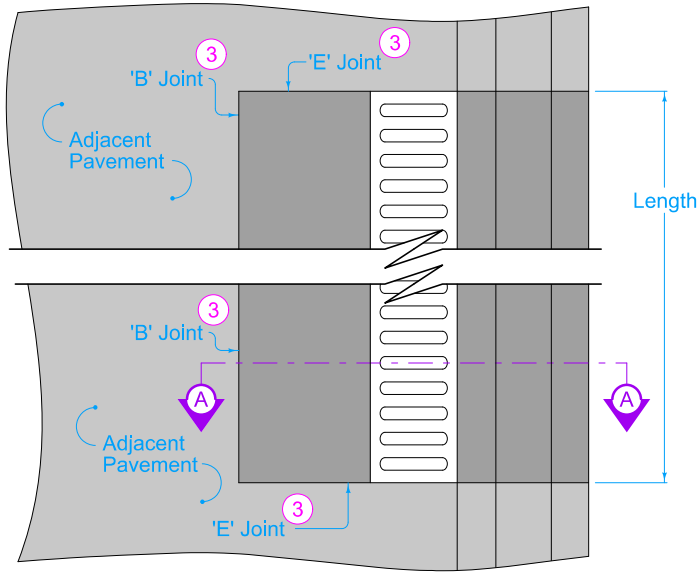

PLAN

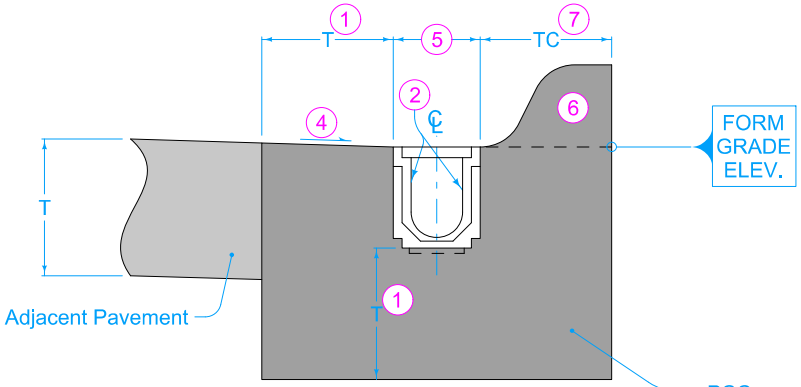

SECTION A-A

1. 6 inches or same as thickness of adjacent pavement, whichever is greater.
2. Linear Trench Drain.
3. For joint details, see PV-101.
4. Slope same as adjacent pavement.
5. Width as determined by manufacturer. Minimum 6 inches.
6. Standard or sloped curb. For curb details, see PV-102.
7. Minimum thickness same as thickness of adjacent pavement or curb width, whichever is greater.

SUDAS	IOWA DOT	REVISION 2 04-21-20
FIGURE 6010.521	STANDARD ROAD PLAN	SW-521 SHEET 2 of 2

REVISIONS: Converted to joint standard. Modified circle note 1.

SUDAS DIRECTOR — DESIGN METHODS ENGINEER

LINEAR TRENCH DRAIN

FIGURE 6010.521 | SHEET 2 OF 2

DESIGNER INFO

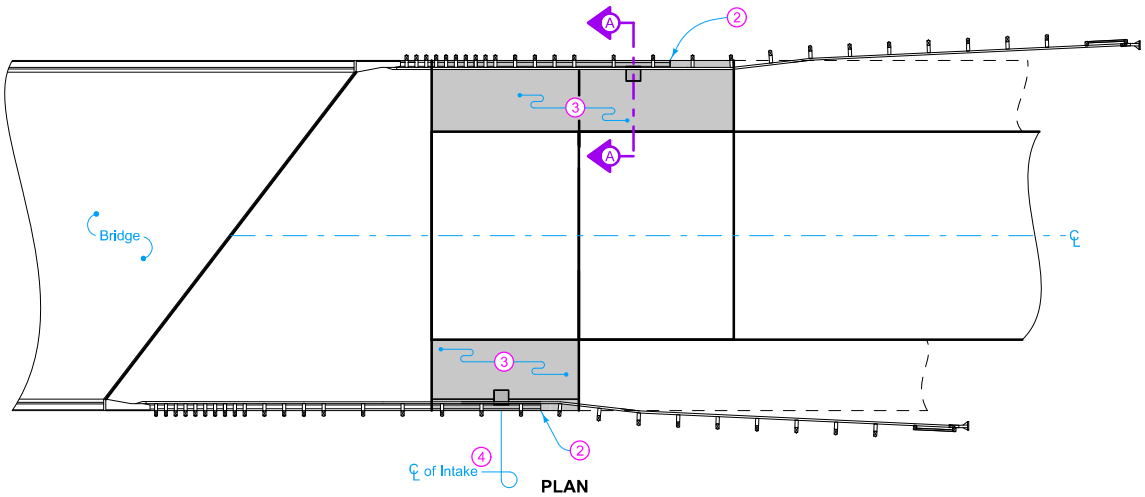

PLAN

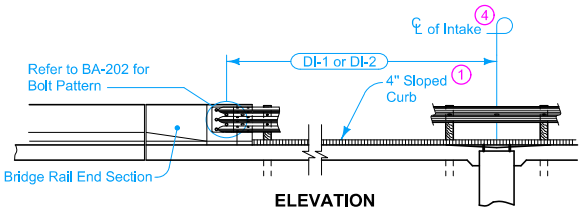

ELEVATION

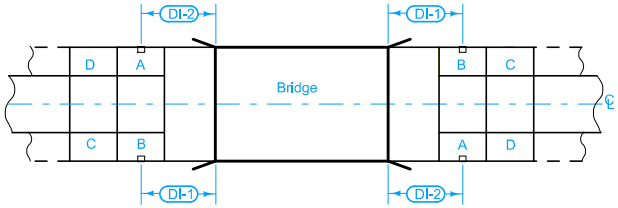

PCC SHOULDER PANEL LOCATIONS 4
(Non-Skewed Bridge)

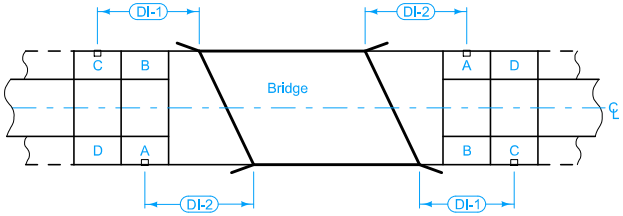

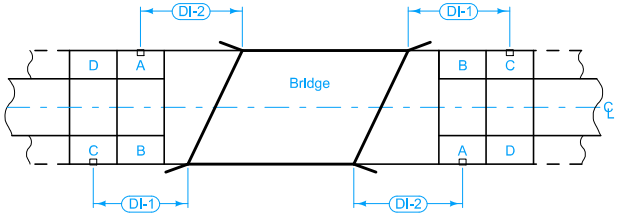

4
PCC SHOULDER PANEL LOCATIONS
(Skewed Bridge)

Price bid for "Intake for Bridge End Drain, SW-538" is full compensation for furnishing, installing, and constructing the Bridge End Drain as shown.

1. Refer to BR-201, BR-202, BR-203, BR-204, or BR-205 for details of 4 inch sloped curb.
2. Continue 4 inch Sloped Curb 5 feet beyond centerline of intake, then transition to no curb as shown on PV-102.
3. Install modified subbase and polymer grid under P.C.C. shoulder panels. See Section A-A (BR-201, BR-202, BR-203, or BR-204, or BR-205) or Section C-C (BR-231).
4. DI-1 and DI-2 distances measured from center of bolt hole pattern. Locate center of intake 6 feet or more from the nearest transverse pavement joint and between guardrail posts to allow for storm sewer outlet. Joints are determined by the bridge approach section.

Possible Contract Items:
Intake for Bridge End Drain, SW-538
Paved Shoulder, Portland Cement Concrete (Paved Shoulder Panel for Bridge-End Drain)

Incidental to Paved Shoulder:
Modified Subbase
Polymer Grid

Possible Tabulation:
104-8

IOWA DOT

STANDARD ROAD PLAN

REVISION	
3	10-15-19

SW-538

SHEET 1 of 5

REVISIONS: Added BR-205 to Circle Notes 1 & 3. Changed corrugated metal pipe to high density polyethylene (HDPE) pipe on Sheet 2.

APPROVED BY DESIGN METHODS ENGINEER

INTAKE FOR BRIDGE END DRAIN

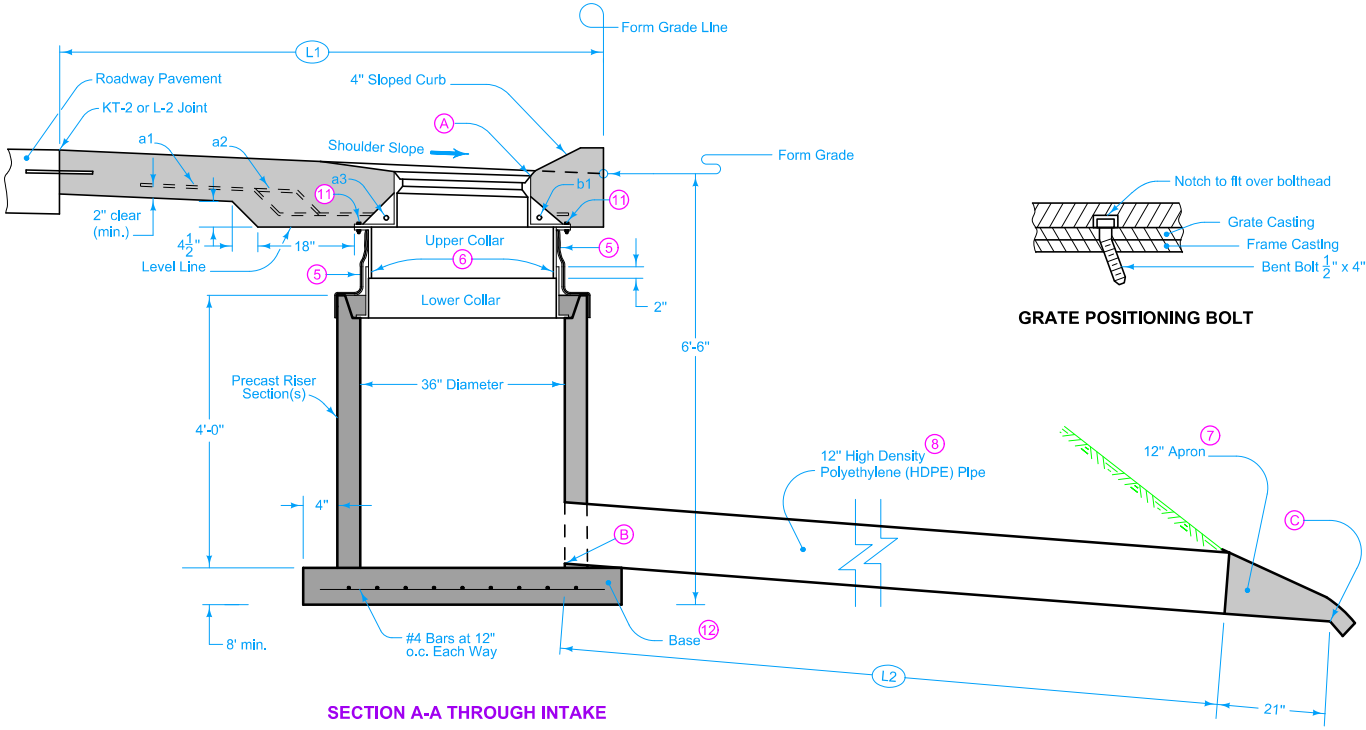

SECTION A-A THROUGH INTAKE

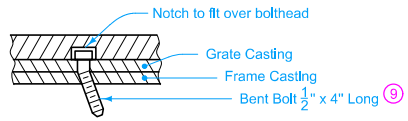

GRATE POSITIONING BOLT

Construct precast base using 4 in. x 4 in. No. 6 steel wire mesh reinforcing or equivalent.

To ensure water-tight joints, use an approved asphaltic sealer for all corrugated metal pipe joints constructed using connecting bands.

Flow line (A) elevation is 0.10 feet below Form Grade Elevation.

Flow line (B) elevation is 5.75 feet below flow line (A).

Flow line (C) elevation is 0 - 0.5 feet above ditch grade.

Refer to project plans for actual flow line elevations of (A), (B), (C), and dimensions L1 and L2.

(5) Before backfilling around the intake assembly, wrap two thicknesses of engineering fabric around the settlement collar. Tape all the way around with 2 inch duct tape immediately below the flange of upper section and 4 inches below the top of well pipe.

(6) Fasten Slip joint temporarily with four $\frac{1}{2}$ inch cap screws during pavement construction. Remove cap screws after pavement is hardened.

(7) Refer to DR-203. Apron is incidental to Intake for Bridge End Drain and will not be paid for separately.

(8) Connect to basin according to Section 2435 of the Standard Specifications. High Density Polyethylene (HDPE) Pipe is incidental to Intake for Bridge End Drain and will not be paid for separately.

(9) Field place $\frac{1}{2}$ in. x 4 in. long bolt in upstream side and bend underside to prevent removal.

(10) Place bars a1, a3, and b1 through the appropriate holes in the intake frame.

(11) Fasten frame casting to Upper Collar casting at four locations using $\frac{1}{2}$ in. x 2 in. long hex bolts and $\frac{1}{2}$ inch nuts.

(12) Cast-in-place base shown. Base may be square. If base is precast integral with walls, the footporint of the base is not required to extend beyond the outer edge of the walls.

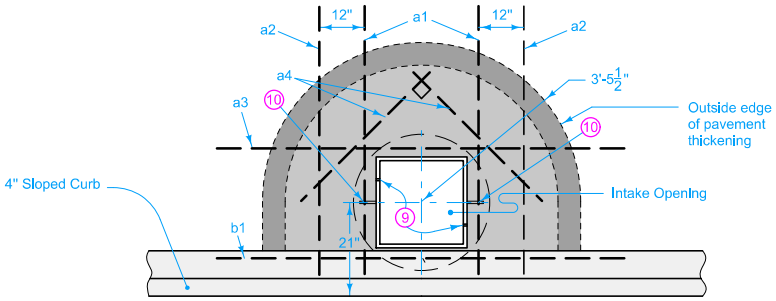

REINFORCING LAYOUT

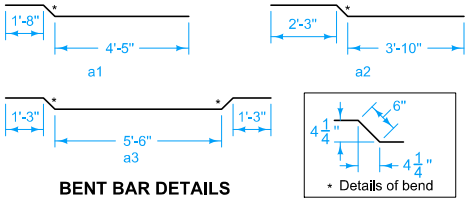

BENT BAR DETAILS

All dimensions are out to out. All bends may be made in the field.

REINFORCING BAR LIST

MARK	SIZE	LOCATION	SHAPE	NO.	LENGTH	WEIGHT
a1 (10)	4	Shoulder		2	6'-7"	9
a2	4	Shoulder		2	6'-7"	9
a3 (10)	4	Shoulder		1	9'-0"	6
a4	4	Shoulder		2	4'-0"	5
b1 (10)	4	Curb		1	8'-9"	6
					Total	35 lbs.

IOWA DOT

STANDARD ROAD PLAN

REVISION	
3	10-15-19

SW-538

SHEET 2 of 5

REVISIONS: Added BR-205 to Circle Notes 1 & 3. Changed corrugated metal pipe to high density polyethylene (HDPE) pipe on Sheet 2.

APPROVED BY DESIGN METHODS ENGINEER

INTAKE FOR BRIDGE END DRAIN

Minimum Weight = 90 lbs.

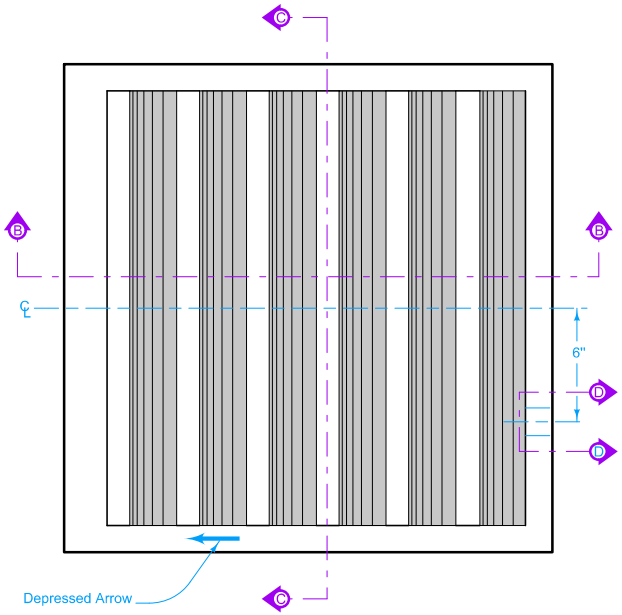

PLAN

Flow

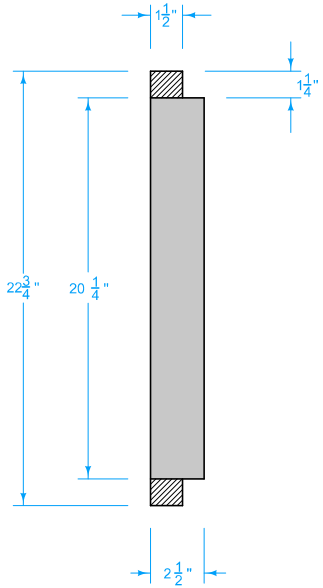

SECTION C-C

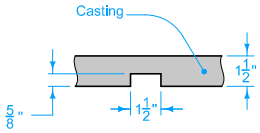

SECTION D-D

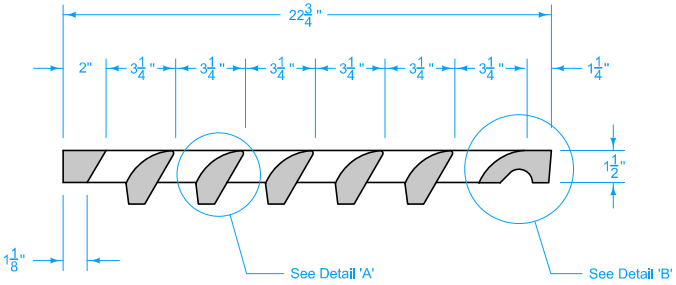

SECTION B-B

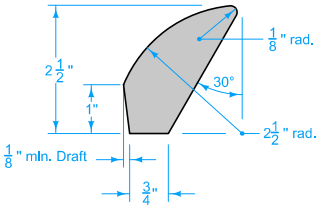

DETAIL 'A'

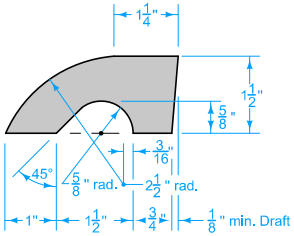

DETAIL 'B'

GRATE

	REVISION	
IOWA DOT	3	10-15-19
STANDARD ROAD PLAN	SW-538	
	SHEET 3 of 5	

REVISIONS: Added BR-205 to Circle Notes 1 & 3. Changed corrugated metal pipe to high density polyethylene (HDPE) pipe on Sheet 2.

APPROVED BY DESIGN METHODS ENGINEER

INTAKE FOR BRIDGE END DRAIN

Minimum Weight = 163 lbs.

(13) Provide $\frac{9}{16}$ inch diameter holes at locations indicated.

(14) $\frac{3}{4}$ inch holes. Drill or core if not already existing.

(15) DRAFT (Small Casting Taper) will be permitted.

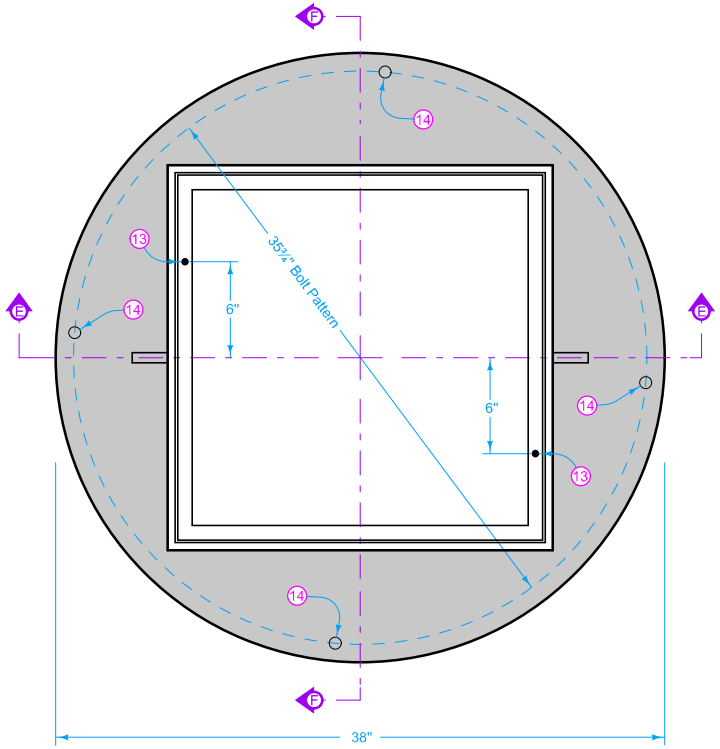

PLAN

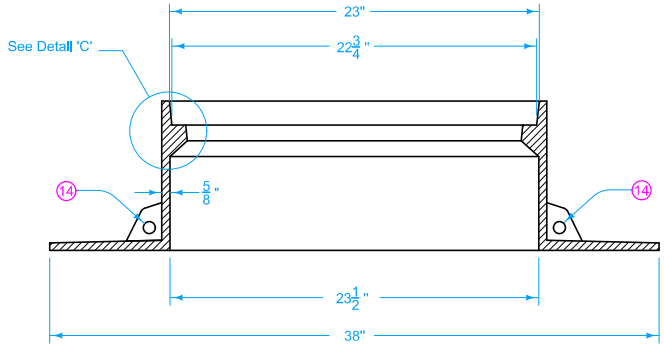

SECTION E-E

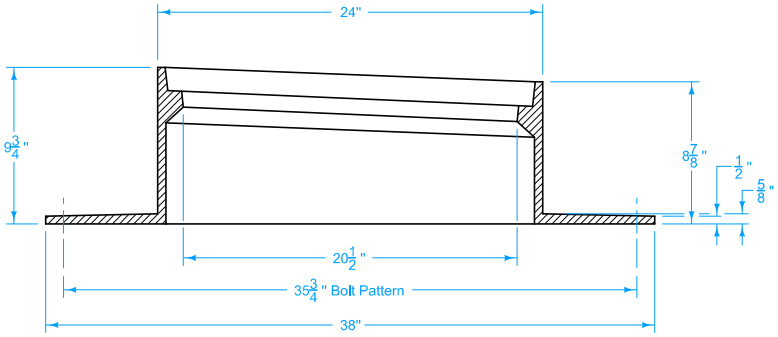

SECTION F-F

FRAME

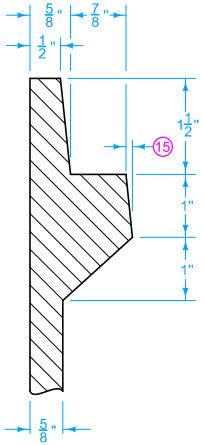

DETAIL 'C'

IOWA DOT

STANDARD ROAD PLAN

REVISION	
3	10-15-19

SW-538

SHEET 4 of 5

REVISIONS: Added BR-205 to Circle Notes 1 & 3. Changed corrugated metal pipe to high density polyethylene (HDPE) pipe on Sheet 2.

APPROVED BY DESIGN METHODS ENGINEER

INTAKE FOR BRIDGE END DRAIN

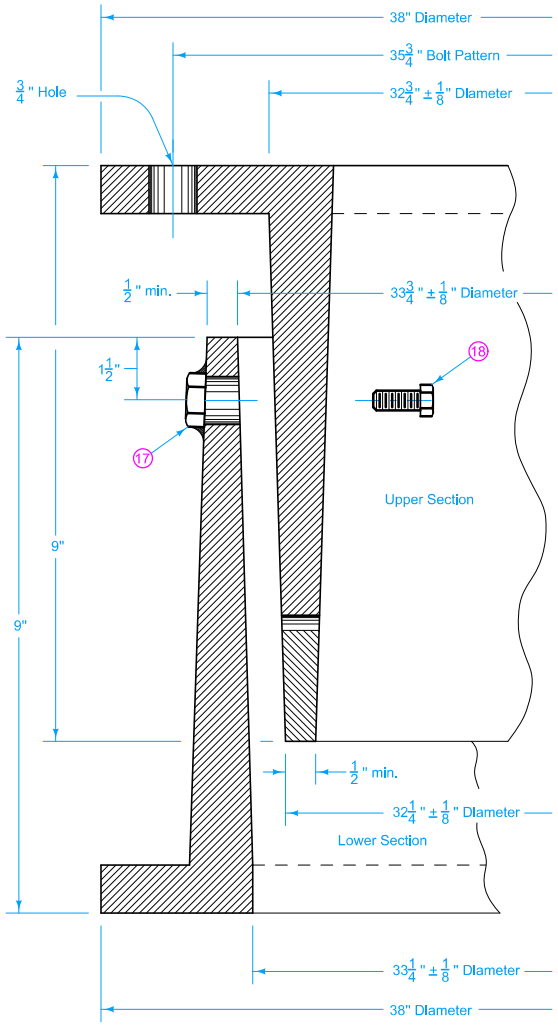

SETTLEMENT COLLAR

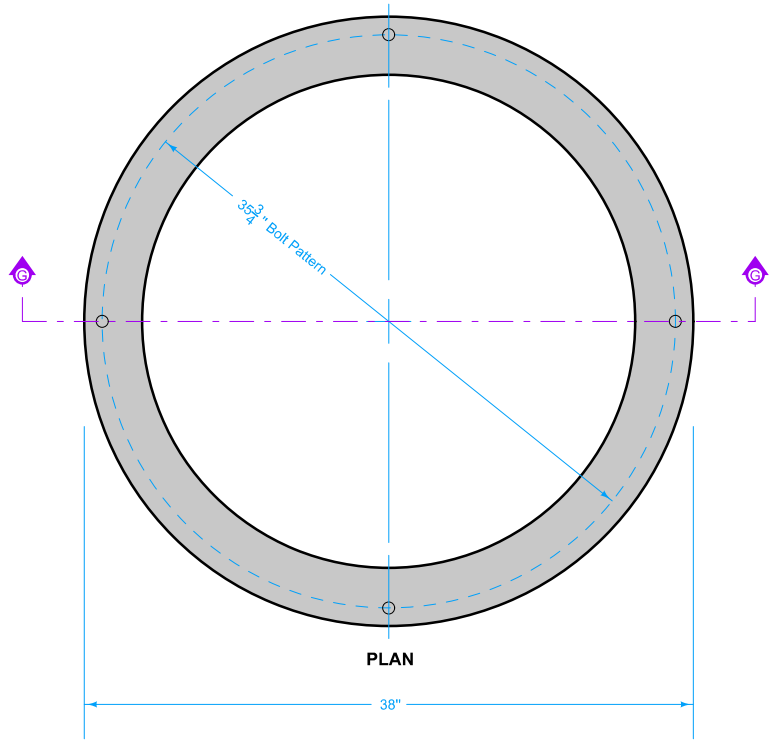

PLAN

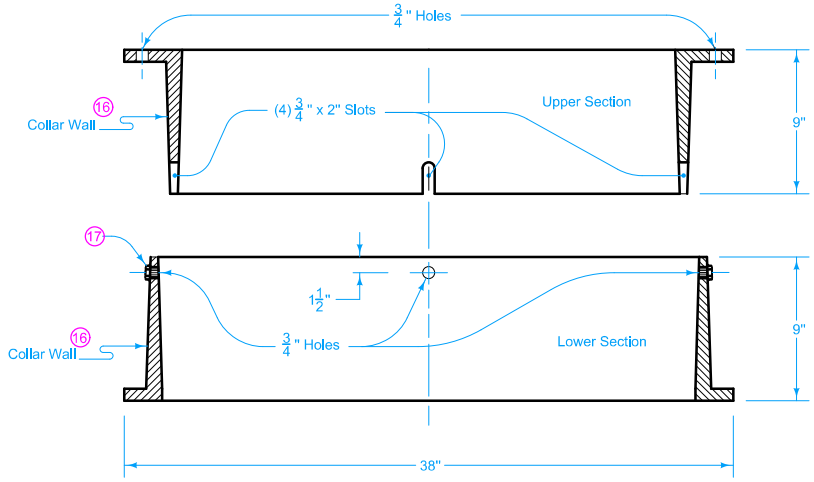

SECTION G-G

(16) Wall thickness may vary uniformly from base to the top or bottom of the casting.

(17) Tack weld four $\frac{1}{2}$ inch nuts to outside of bottom settlement collar or drill and tap four holes for $\frac{1}{2}$ inch Cap Screws in bottom settlement collar.

(18) Remove the four $\frac{1}{2}$ inch Cap Screws after surrounding concrete has set.

MINIMUM WEIGHT	
Upper Section	210 lbs.
Lower Section	210 lbs.

IOWA DOT

STANDARD ROAD PLAN

REVISION	
3	10-15-19

SW-538

SHEET 5 of 5

REVISIONS: Added BR-205 to Circle Notes 1 & 3. Changed corrugated metal pipe to high density polyethylene (HDPE) pipe on Sheet 2.

APPROVED BY DESIGN METHODS ENGINEER

INTAKE FOR BRIDGE END DRAIN

DESIGNER INFO

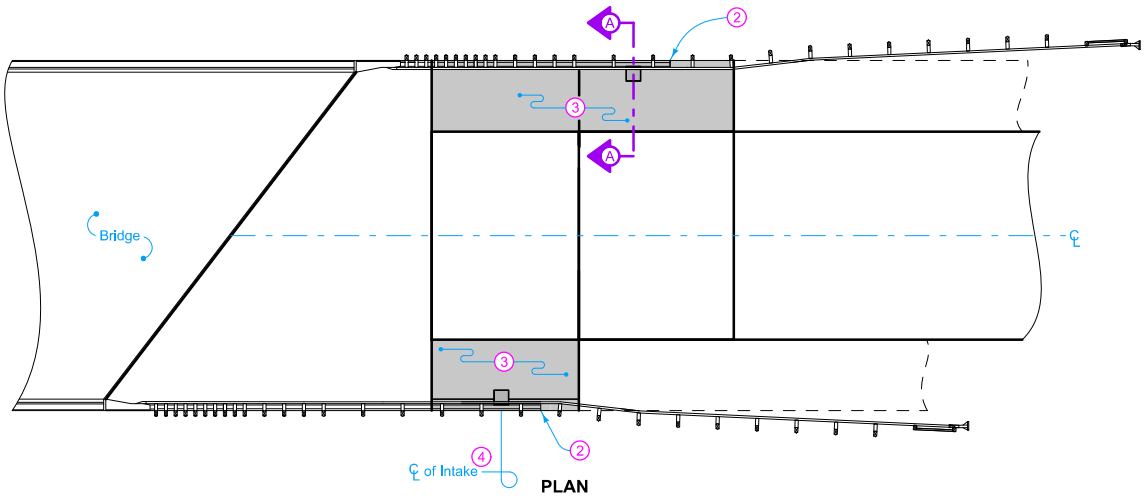

PLAN

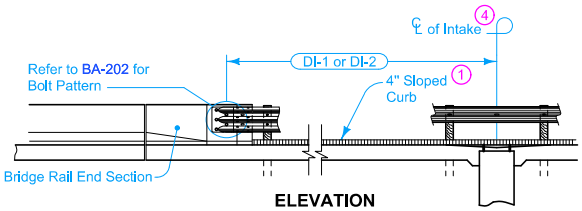

ELEVATION

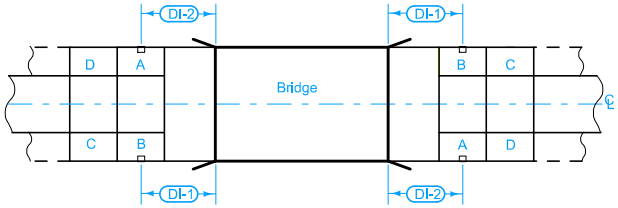

PCC SHOULDER PANEL LOCATIONS 4
(Non-Skewed Bridge)

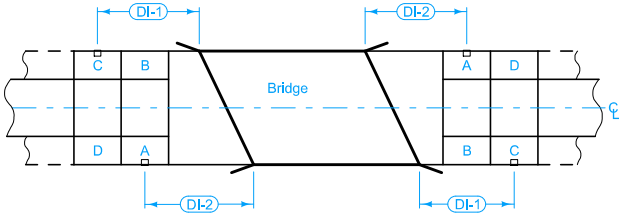

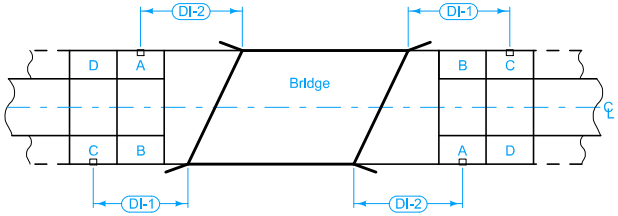

4
PCC SHOULDER PANEL LOCATIONS
(Skewed Bridge)

Price bid for "Intake for Bridge End Drain, SW-539" is full compensation for furnishing, installing, and constructing the Bridge End Drain as shown.

1. Refer to BR-201, BR-202, BR-203, BR-204, or BR-205 for details of 4 inch sloped curb.
2. Continue 4 inch Sloped Curb 5 feet beyond centerline of intake, then transition to no curb as shown on PV-102.
3. Install modified subbase and polymer grid under P.C.C. shoulder panels. See Section A-A (BR-201, BR-202, BR-203, or BR-204, or BR-205) or Section C-C (BR-231).
4. DI-1 and DI-2 distances measured from center of bolt hole pattern. Locate center of intake 6 feet or more from the nearest transverse pavement joint and between guardrail posts to allow for storm sewer outlet. Joints are determined by the bridge approach section.

Possible Contract Items:
Intake for Bridge End Drain, SW-539
Paved Shoulder, Portland Cement Concrete (Paved Shoulder Panel for Bridge-End Drain)

Incidental to Paved Shoulder:
Modified Subbase
Polymer Grid

Possible Tabulation:
104-8B

IOWA DOT

STANDARD ROAD PLAN

REVISION	
1	10-15-19

SW-539

SHEET 1 of 5

REVISIONS: Added Designer Info button & BR-205 to Circle Notes 1 & 3.

APPROVED BY DESIGN METHODS ENGINEER

INTAKE FOR BRIDGE END DRAIN
(WITH LETDOWN)

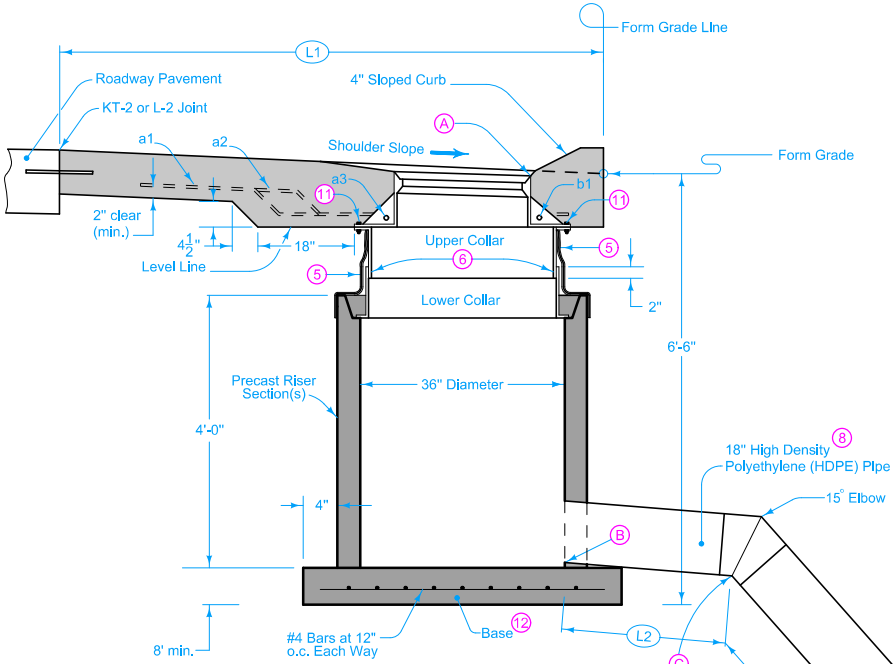

SECTION A-A THROUGH INTAKE

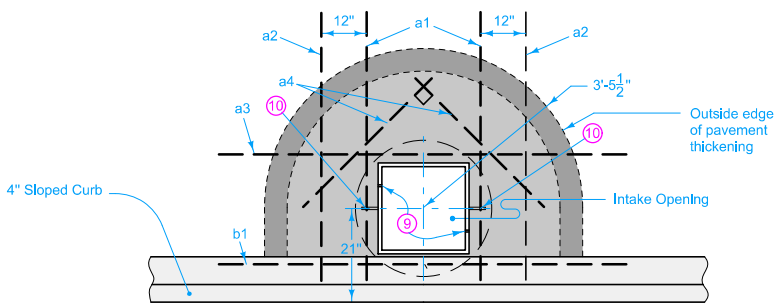

REINFORCING LAYOUT

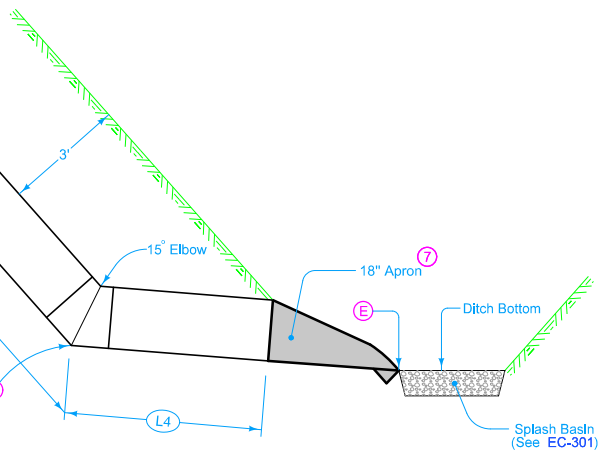

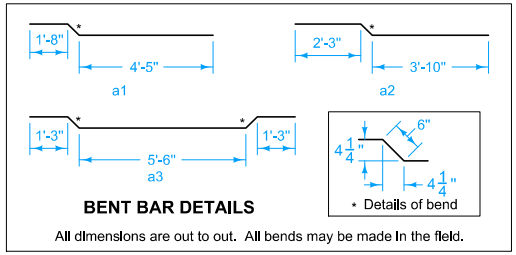

BENT BAR DETAILS

All dimensions are out to out. All bends may be made in the field.

REINFORCING BAR LIST

MARK	SIZE	LOCATION	SHAPE	NO.	LENGTH	WEIGHT
a1 (10)	4	Shoulder		2	6'-7"	9
a2	4	Shoulder		2	6'-7"	9
a3 (10)	4	Shoulder		1	9'-0"	6
a4	4	Shoulder		2	4'-0"	5
b1 (10)	4	Curb		1	8'-9"	6
					Total	35 lbs.

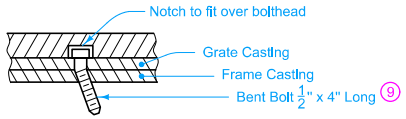

GRATE POSITIONING BOLT

Construct precast base using 4 in. x 4 in. No. 6 steel wire mesh reinforcing or equivalent.

Flow line (A) elevation is 0.10 feet below Form Grade Elevation.

Flow line (B) elevation is 5.75 feet below flow line (A).

Flow line (E) elevation is 0 - 0.5 feet above ditch grade.

Refer to project plans for actual flow line elevations of (A), (B), (C), (D), (E), and dimensions L1, L2, L3, and L4.

(5) Before backfilling around the intake assembly, wrap two thicknesses of engineering fabric around the settlement collar. Tape all the way around with 2 inch duct tape immediately below the flange of upper section and 4 inches below the top of well pipe.

(6) Fasten Slip joint temporarily with four $\frac{1}{2}$ inch cap screws during pavement construction. Remove cap screws after pavement is hardened.

(7) Refer to DR-203. Apron is incidental to Intake for Bridge End Drain and will not be paid for separately.

(8) Connect to basin according to Section 2435 of the Standard Specifications. High Density Polyethylene (HDPE) Pipe is incidental to Intake for Bridge End Drain and will not be paid for separately.

(9) Field place $\frac{1}{2}$ in. x 4 in. long bolt in upstream side and bend underside to prevent removal.

(10) Place bars a1, a3, and b1 through the appropriate holes in the intake frame.

(11) Fasten frame casting to Upper Collar casting at four locations using $\frac{1}{2}$ in. x 2 in. long hex bolts and $\frac{1}{2}$ inch nuts.

(12) Cast-in-place base shown. Base may be square. If base is precast integral with walls, the footporint of the base is not required to extend beyond the outer edge of the walls.

IOWA DOT

STANDARD ROAD PLAN

REVISION	
1	10-15-19

SW-539

SHEET 2 of 5

REVISIONS: Added Designer Info button & BR-205 to Circle Notes 1 & 3.

APPROVED BY DESIGN METHODS ENGINEER

INTAKE FOR BRIDGE END DRAIN (WITH LETDOWN)

Minimum Weight = 90 lbs.

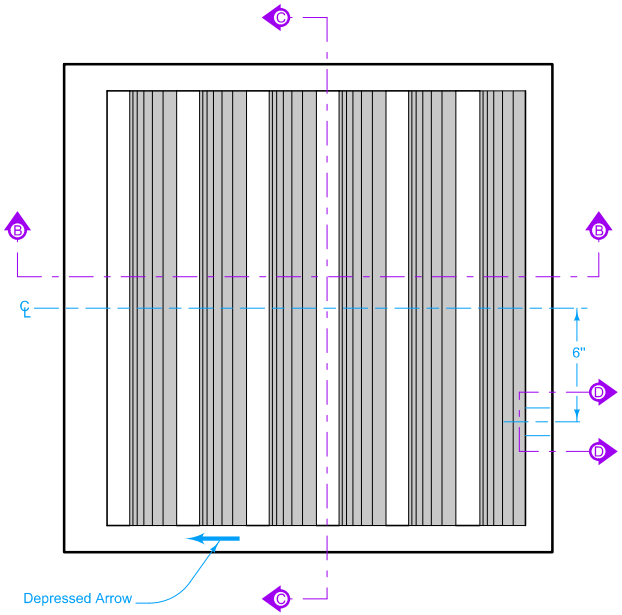

PLAN

Flow

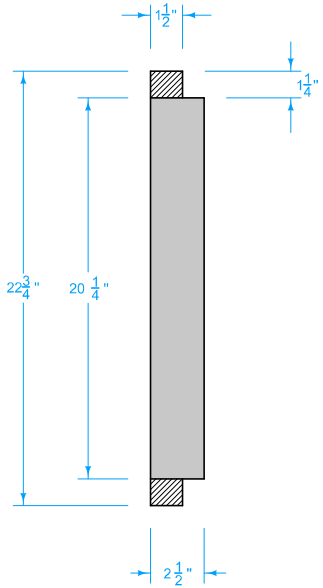

SECTION C-C

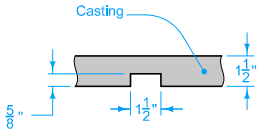

SECTION D-D

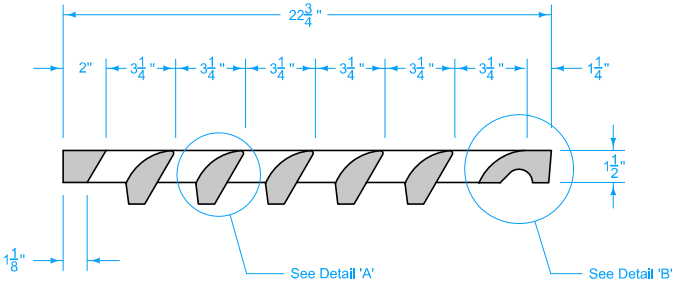

SECTION B-B

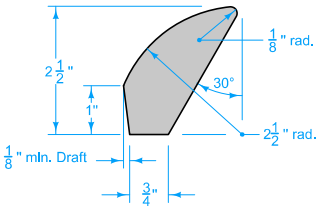

DETAIL 'A'

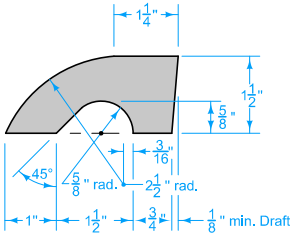

DETAIL 'B'

GRATE

IOWA DOT

STANDARD ROAD PLAN

REVISION	
1	10-15-19

SW-539

SHEET 3 of 5

REVISIONS: Added Designer Info button & BR-205 to Circle Notes 1 & 3.

APPROVED BY DESIGN METHODS ENGINEER

INTAKE FOR BRIDGE END DRAIN (WITH LETDOWN)

Minimum Weight = 163 lbs.

(13) Provide $\frac{9}{16}$ inch diameter holes at locations indicated.

(14) $\frac{3}{4}$ inch holes. Drill or core if not already existing.

(15) DRAFT (Small Casting Taper) will be permitted.

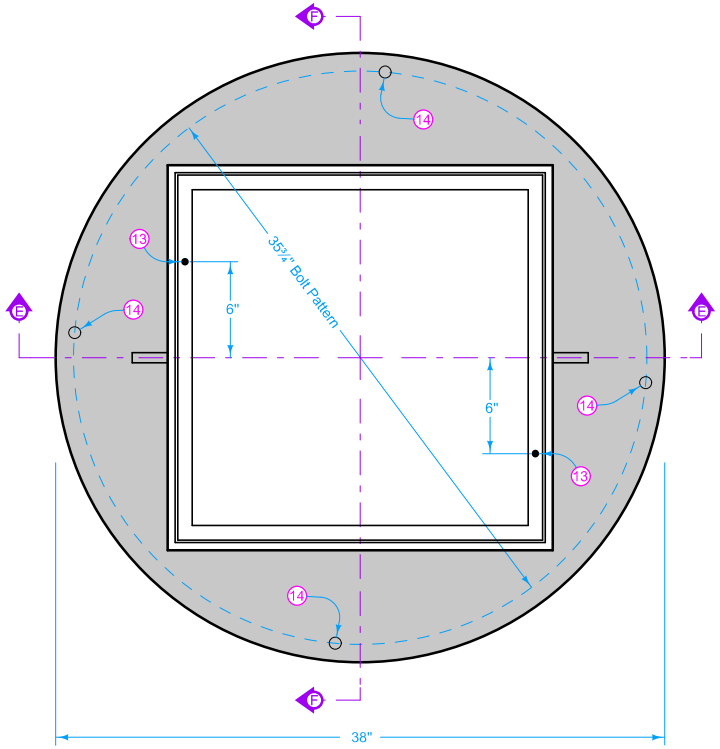

PLAN

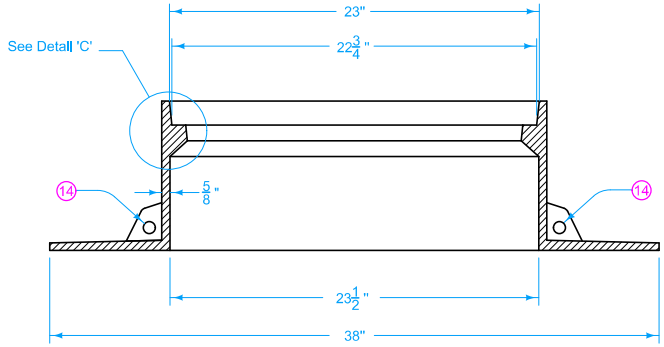

SECTION E-E

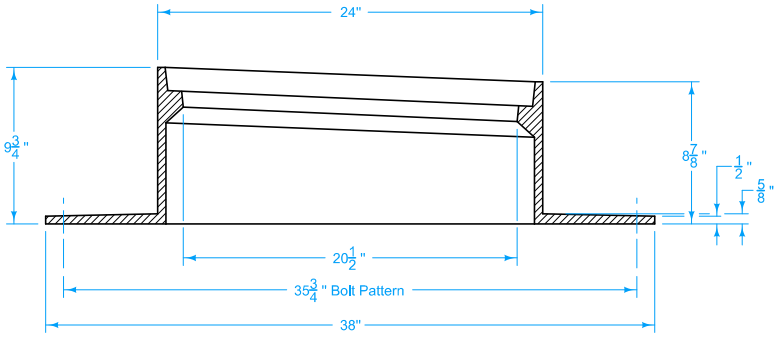

SECTION F-F

FRAME

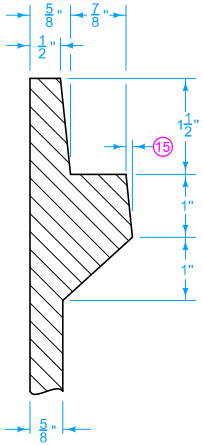

DETAIL 'C'

IOWA DOT

STANDARD ROAD PLAN

REVISION	
1	10-15-19

SW-539

SHEET 4 of 5

REVISIONS: Added Designer Info button & BR-205 to Circle Notes 1 & 3.

APPROVED BY DESIGN METHODS ENGINEER

INTAKE FOR BRIDGE END DRAIN
(WITH LETDOWN)

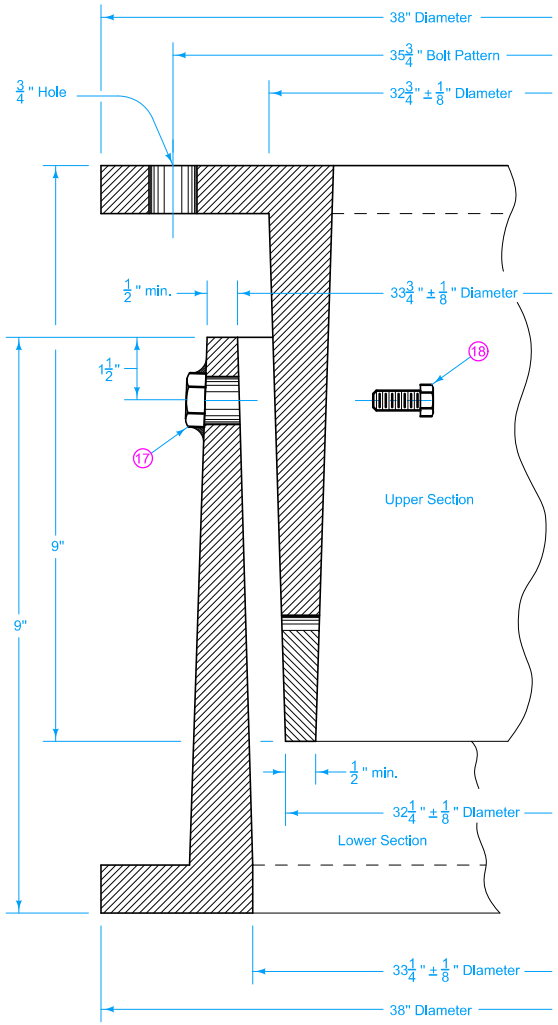

SETTLEMENT COLLAR

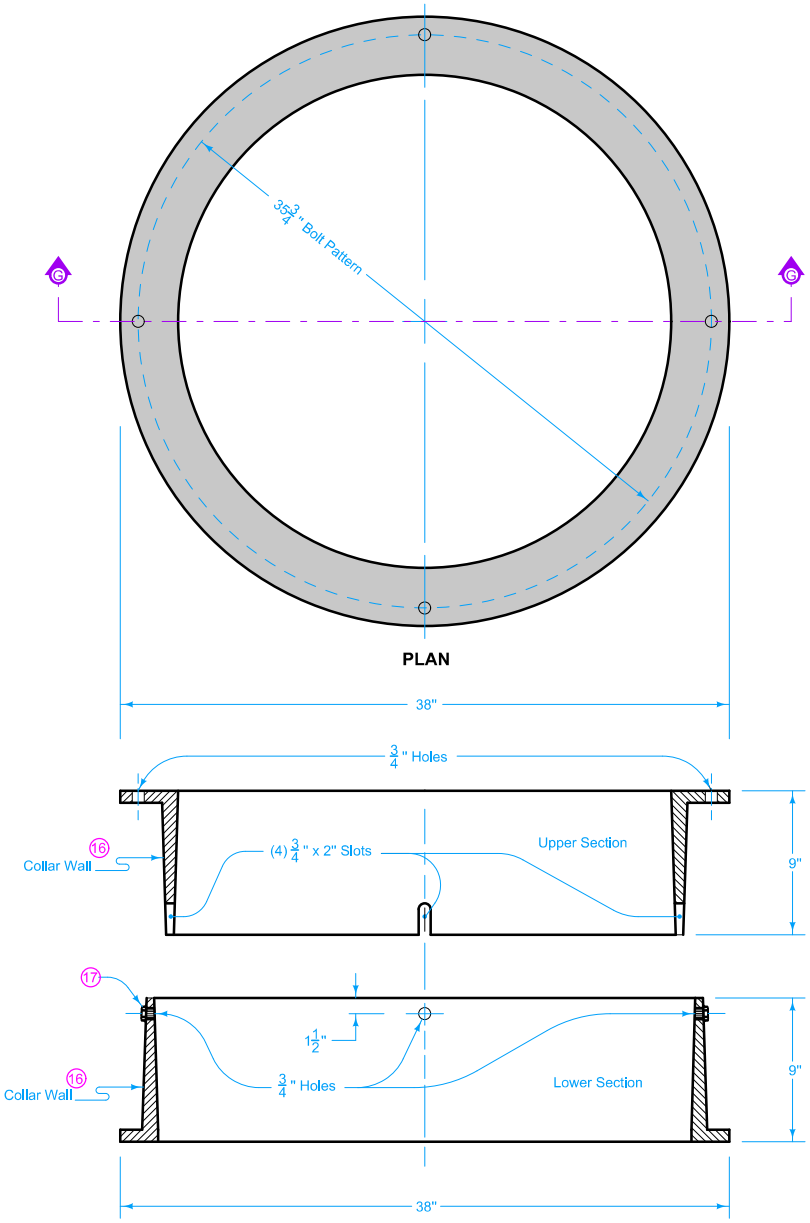

SECTION G-G

16 Wall thickness may vary uniformly from base to the top or bottom of the casting.

17 Tack weld four $\frac{1}{2}$ inch nuts to outside of bottom settlement collar or drill and tap four holes for $\frac{1}{2}$ inch Cap Screws in bottom settlement collar.

18 Remove the four $\frac{1}{2}$ inch Cap Screws after surrounding concrete has set.

MINIMUM WEIGHT	
Upper Section	210 lbs.
Lower Section	210 lbs.

IOWA DOT

STANDARD ROAD PLAN

REVISION	
1	10-15-19

SW-539

SHEET 5 of 5

REVISIONS: Added Designer Info button & BR-205 to Circle Notes 1 & 3.

APPROVED BY DESIGN METHODS ENGINEER

INTAKE FOR BRIDGE END DRAIN (WITH LETDOWN)

1. 39 inches when attaching the SW-542 extension unit.
2. 37 inches when attaching the SW-542 extension unit.
3. Additional keyed construction joint when attaching the SW-542 extension unit.

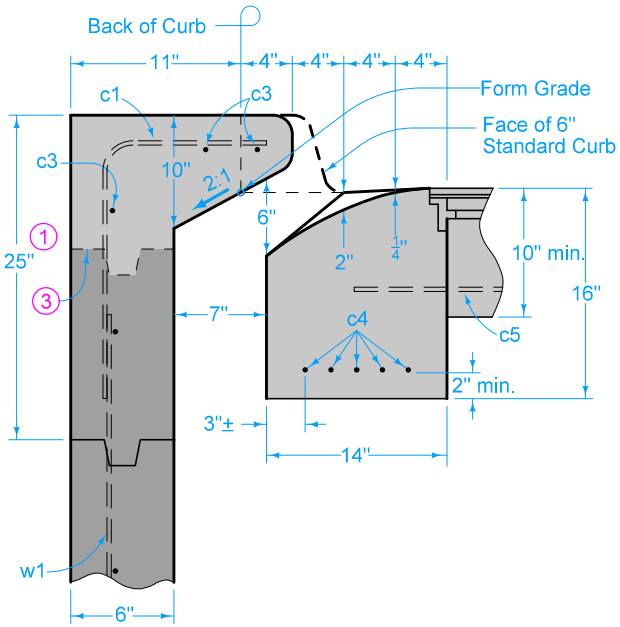

INSERT
(6 Inch Standard Curb)

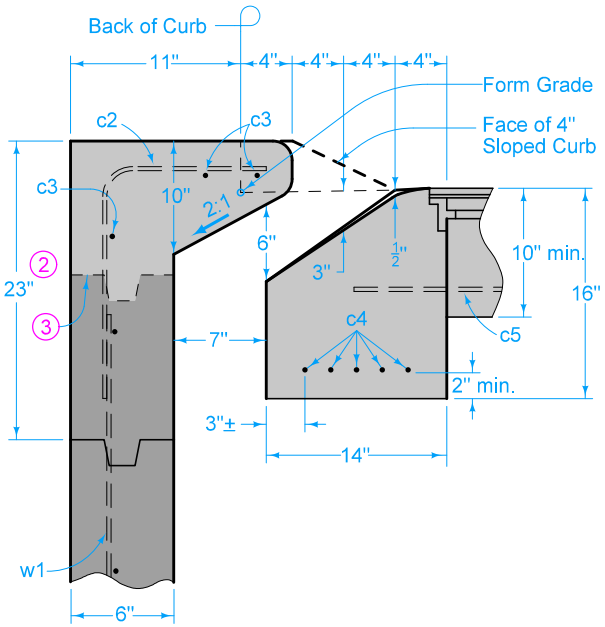

INSERT
(4 Inch Sloped Curb)

SUDAS	IOWA DOT	REVISION 5 04-21-20
FIGURE 6010.541	STANDARD ROAD PLAN	SW-541 SHEET 1 of 2

REVISIONS: Changed wall walls to 6 Inch reinforced. Modified TYPICAL SECTION and c1 and c2 bar lengths. Added note 4. Added Class I bedding material.

SUDAS DIRECTOR — DESIGN METHODS ENGINEER

OPEN-THROAT CURB INTAKE UNDER PAVEMENT

FIGURE 6010.541 | SHEET 1 OF 2

For joint details, refer to PV-101.

(3) Additional keyed construction joint when attaching the SW-542 extension unit.

(4) Top of well flush with pavement.

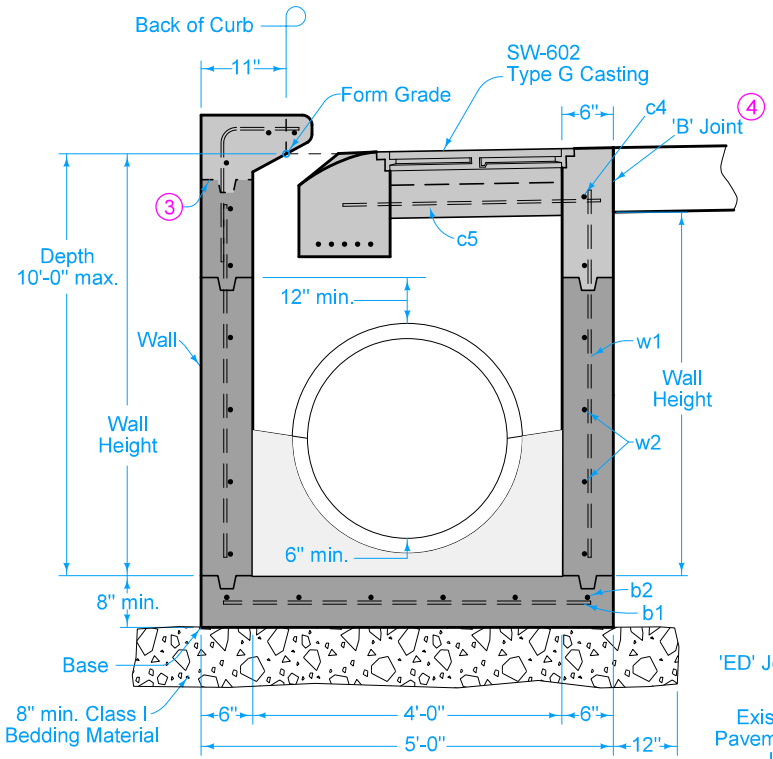

TYPICAL SECTION

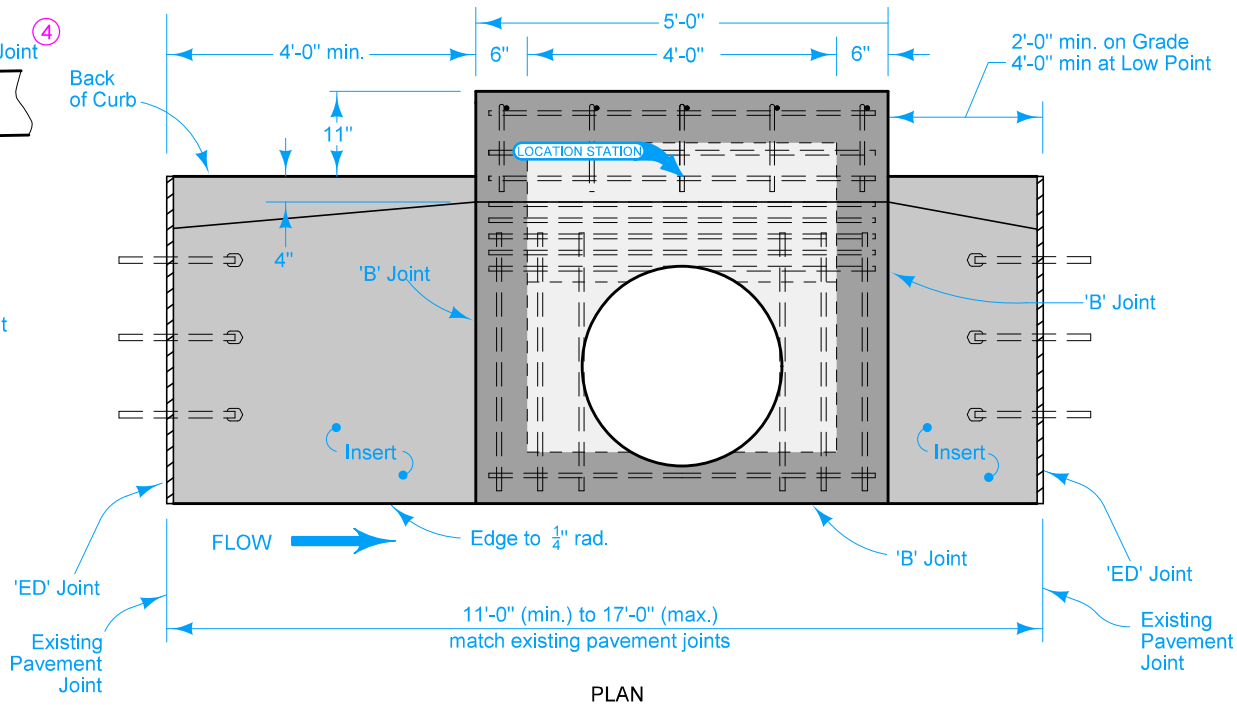

PLAN

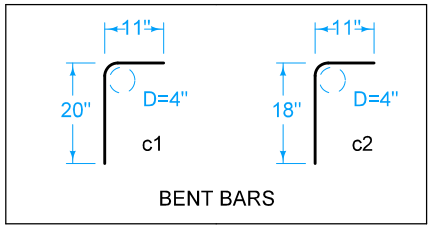

BENT BARS

REINFORCING BAR LIST					
Mark	Size	Location	Shape	Length	Spacing
b1	4	Base	——	4'-6"	11"
b2	4	Base	——	4'-6"	11"
w1	4	Wall	——	Wall Height minus 4"	14"
w2	4	Wall	——	4'-8"	12"
c1	4	Top	⌐	2'-7"	14"
c2	4	Top	⌐	2'-5"	14"
c3	4	Top	——	4'-8"	See Detail
c4	4	Top	——	4'-8"	See Detail
c5	4	Top	——	3'-2"	See Detail

MAXIMUM PIPE DIAMETER	
Precast	30"
Cast-in-Place	36"

SUDAS | IOWA DOT

REVISION 5 04-21-20

FIGURE 6010.541 | STANDARD ROAD PLAN | SW-541

SHEET 2 of 2

REVISIONS: Changed well walls to 6 inch reinforced. Modified TYPICAL SECTION and c1 and c2 bar lengths. Added note 4. Added Class I bedding material.

SUDAS DIRECTOR | DESIGN METHODS ENGINEER

OPEN-THROAT CURB INTAKE UNDER PAVEMENT

FIGURE 6010.541 | SHEET 2 OF 2

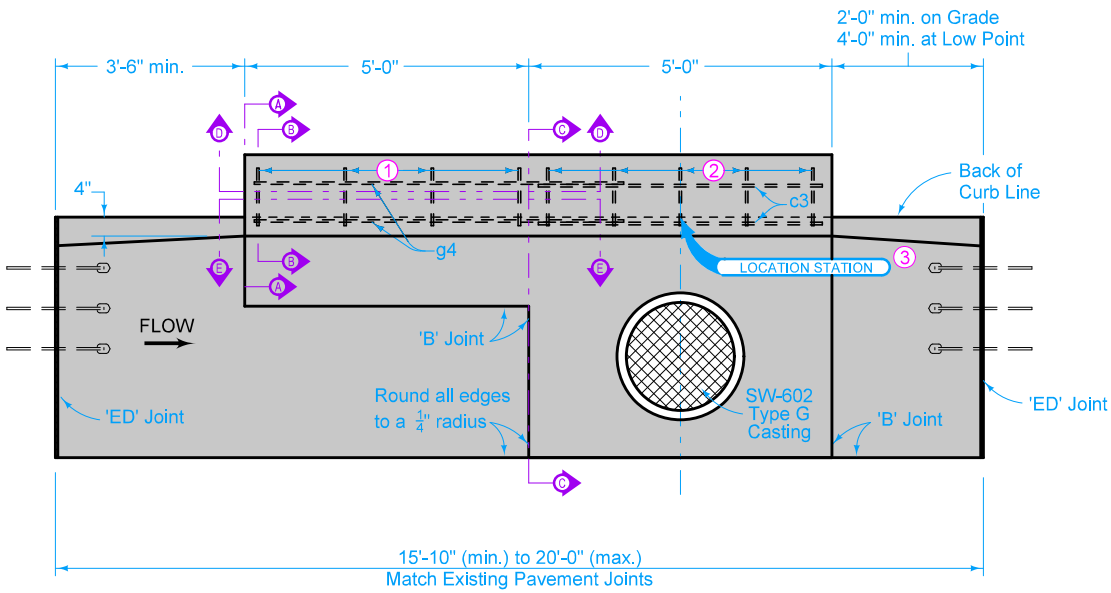

PLAN
(SW-542 EXTENSION AND SW-541 INTAKE)

Extension unit may be used on either or both sides of SW-541 intakes. Details are similar when extension unit is on the opposite side.

1. g3 for 6 inch standard curb; g5 for 4 inch sloped curb.
2. c1 for 6 inch standard curb; c2 for 4 inch sloped curb. See SW-541 for reinforcing.
3. The location station is where the centerline of intake meets the back of the curb line.

Placing sequence: 1. Base; 2. Walls and Extension; 3. Top; 4. Insert

REINFORCING BAR LIST

BAR	SIZE	LOCATION	SHAPE	NO.	LENGTH	WEIGHT	SPACING
b2	4	Intake Wall	⊓	3	2'-6"	5.0	9"
f1	4	Bottom	—	3	4'-9"	9.5	9"
f2	4	Bottom	—	4	1'-7"	4.2	18"
g1	4	Wall	—	5	Varies*	Varies*	12"
g2	4	Wall	—	1	4'-8"	3.1	-
g3	4	Top	⊓	4	Varies**	Varies**	18"
g4	4	Top	—	3	6'-4"	12.7	-
g5	4	Top	⊓	4	Varies**	Varies**	18"

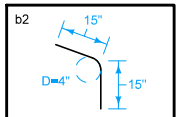

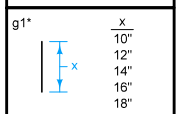

x
10"
12"
14"
16"
18"

Provide one of each length

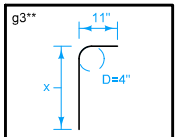

x
26"
29"
32"
35"

Provide one of each length

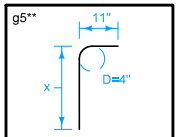

x
24"
27"
30"
33"

Provide one of each length

SUDAS IOWA DOT

REVISION
5 10-20-20

FIGURE 6010.542 STANDARD ROAD PLAN

SW-542
SHEET 1 of 4

REVISIONS: Removed Interim from standard.

SUDAS DIRECTOR DESIGN METHODS ENGINEER

EXTENSION UNIT FOR OPEN-THROAT CURB INTAKE UNDER PAVEMENT

FIGURE 6010.542 SHEET 1 OF 4

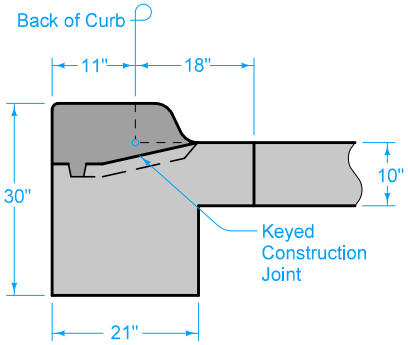

SECTION A-A

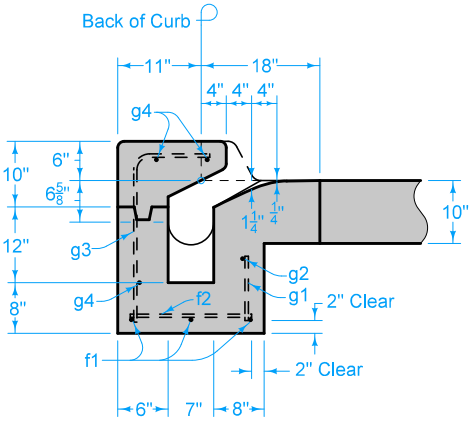

SECTION B-B

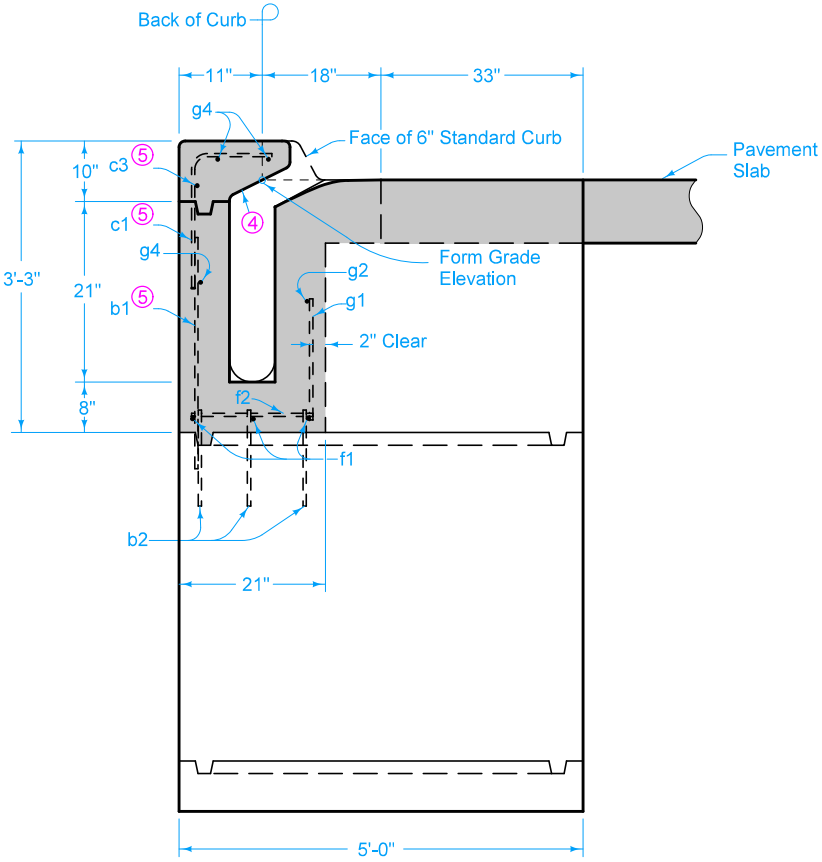

SECTION C-C

4 2:1 Slope (Horizontal:Vertical)

5 See SW-541 for reinforcing.

6 INCH STANDARD CURB

SUDAS IOWADOT

REVISION	
5	10-20-20

FIGURE 6010.542 STANDARD ROAD PLAN

SW-542

SHEET 2 of 4

REVISIONS: Removed Interim from standard.

SUDAS DIRECTOR DESIGN METHODS ENGINEER

EXTENSION UNIT FOR OPEN-THROAT CURB INTAKE UNDER PAVEMENT

FIGURE 6010.542 SHEET 2 OF 4

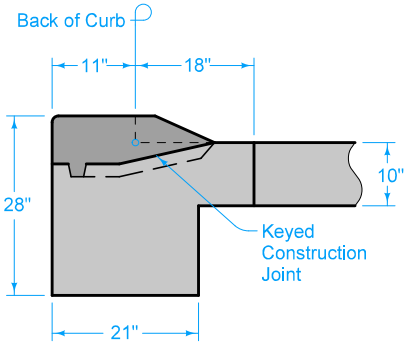

SECTION A-A

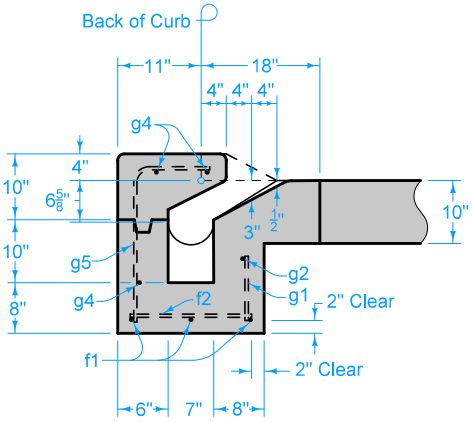

SECTION B-B

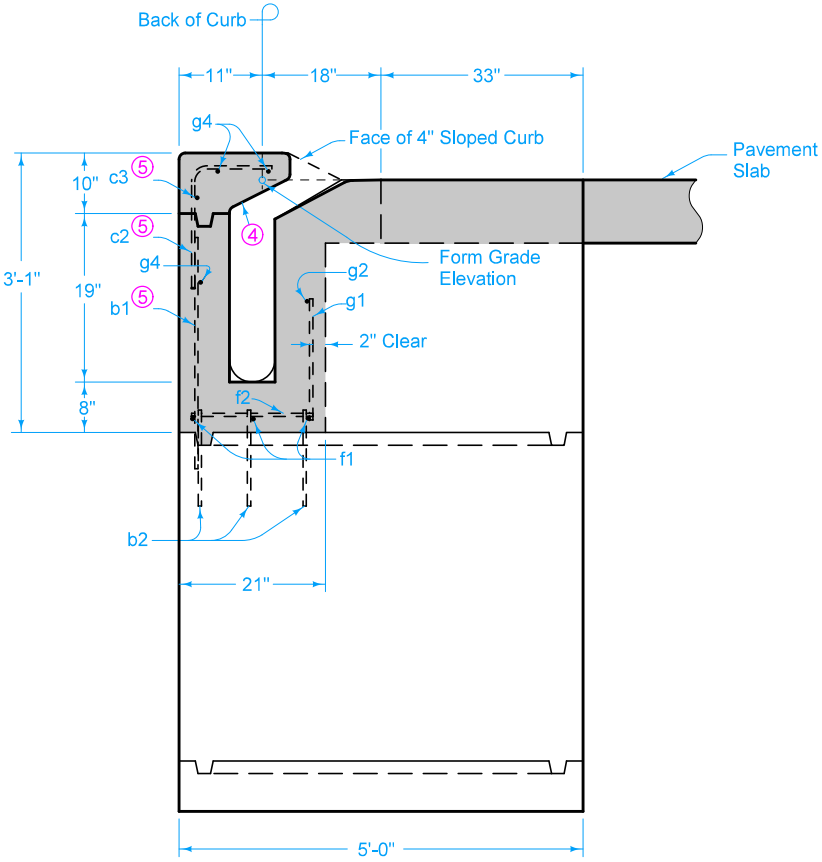

SECTION C-C

4 INCH SLOPED CURB

4 2:1 Slope (Horizontal:Vertical)

5 See SW-541 for reinforcing.

SUDAS IOWA DOT

REVISION	
5	10-20-20

FIGURE 6010.542 STANDARD ROAD PLAN

SW-542

SHEET 3 of 4

REVISIONS: Removed Interim from standard.

Paul D. Wiegand
SUDAS DIRECTOR

DESIGN METHODS ENGINEER

EXTENSION UNIT FOR OPEN-THROAT CURB INTAKE UNDER PAVEMENT

FIGURE 6010.542 SHEET 3 OF 4

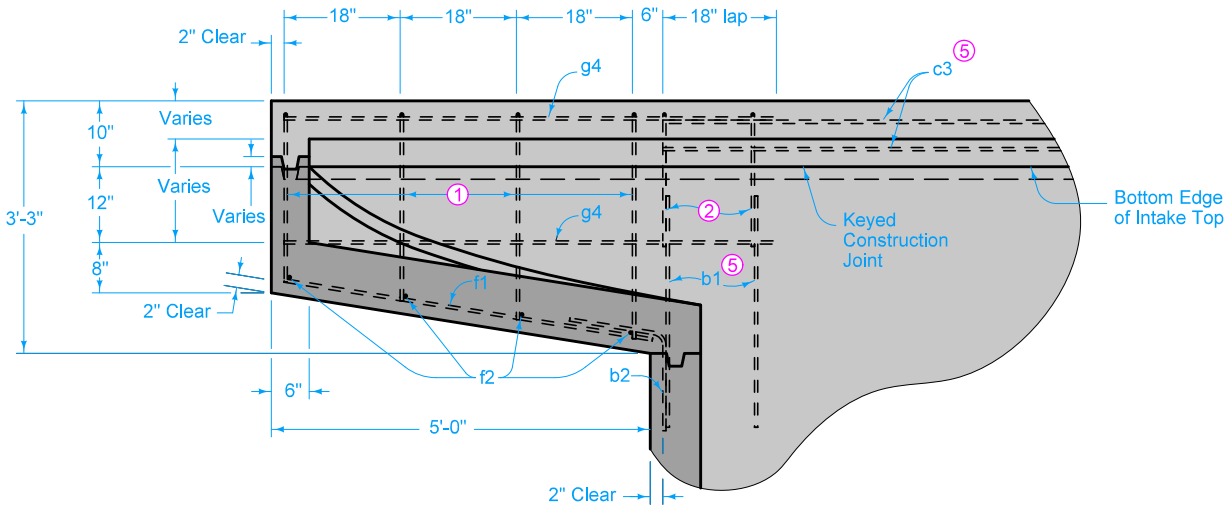

SECTION D-D

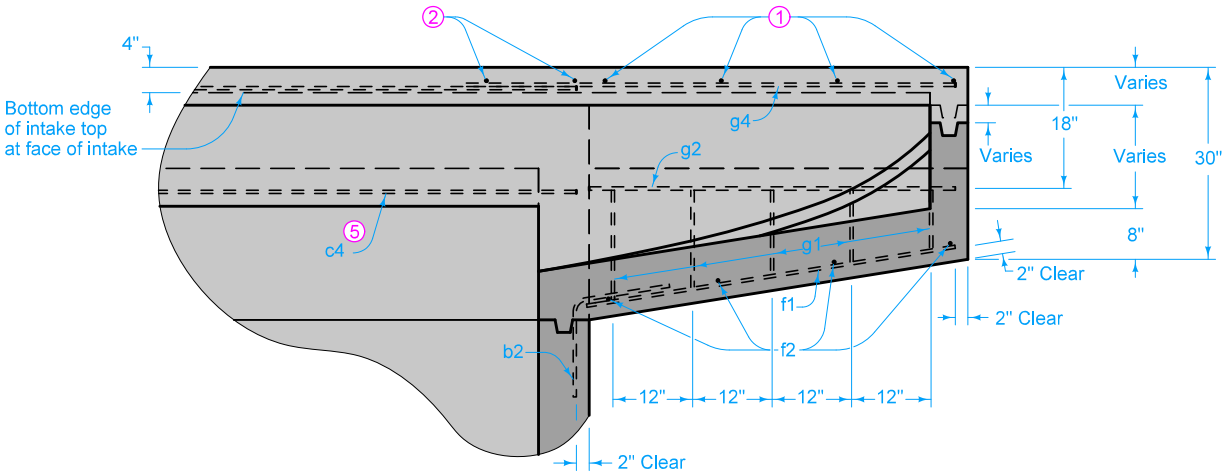

SECTION E-E

1. g3 for 6 inch standard curb; g5 for 4 inch sloped curb.
2. c1 for 6 inch standard curb; c2 for 4 inch sloped curb. See SW-541 for reinforcing.
5. See SW-541 for reinforcing.

SUDAS IOWA DOT

REVISION	
5	10-20-20

FIGURE 6010.542 | STANDARD ROAD PLAN | SW-542

SHEET 4 of 4

REVISIONS: Removed Interim from standard.

SUDAS DIRECTOR — DESIGN METHODS ENGINEER

EXTENSION UNIT FOR OPEN-THROAT CURB INTAKE UNDER PAVEMENT

FIGURE 6010.542 SHEET 4 OF 4

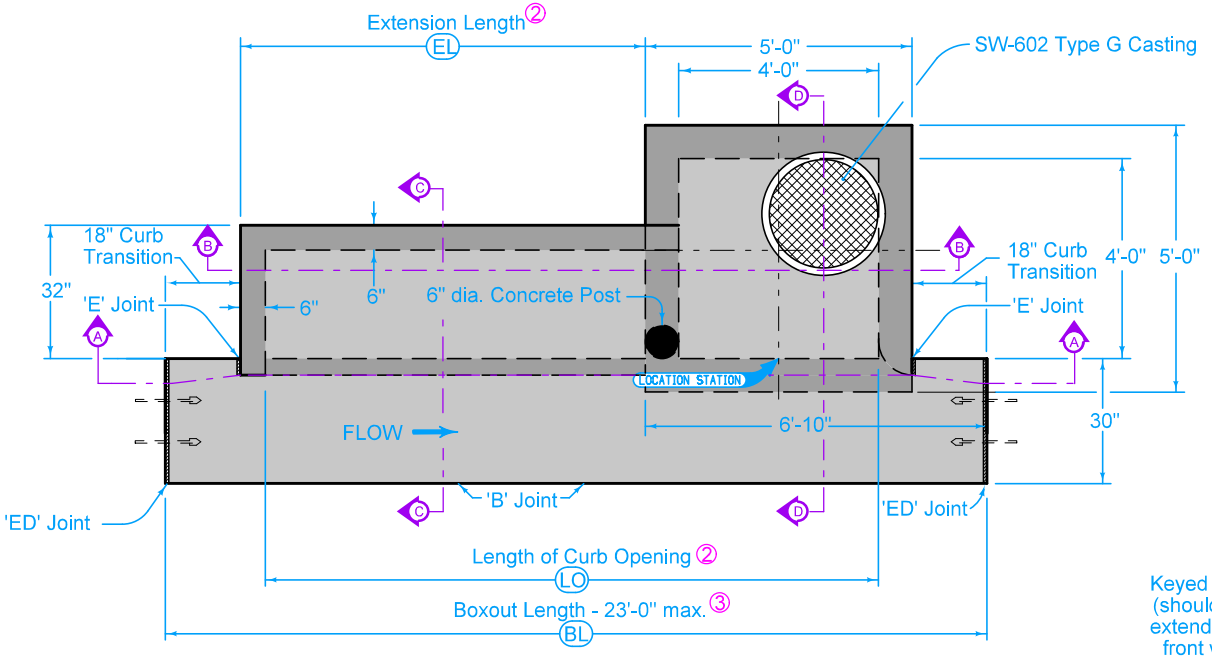

PLAN

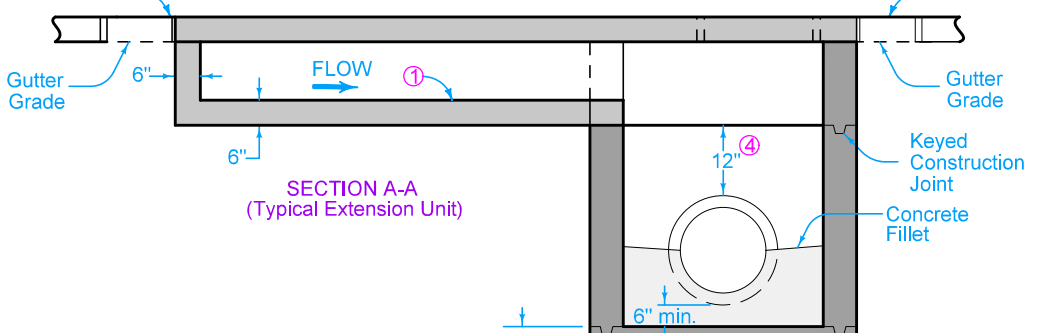

SECTION A-A
(Typical Extension Unit)

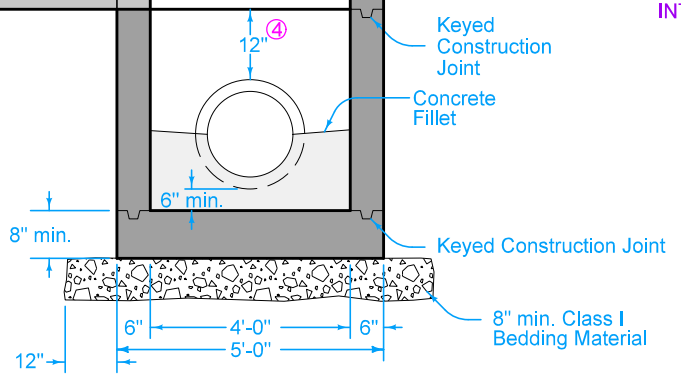

SECTION B-B
(Typical Intake Well)

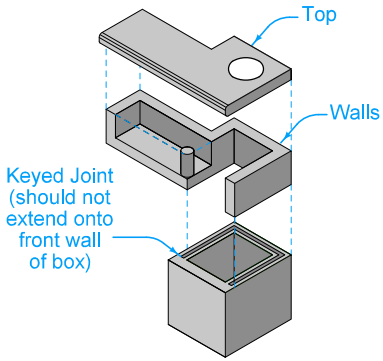

ISOMETRIC
INTAKE WELL, WALLS AND TOP

Extension unit may be used on either or both sides of intake. Details are similar when extension unit is on the opposite side. For joint details, refer to PV-101.

① Match gutter slope. Drain to well.

② Other lengths of opening may be constructed by varying the length of the extension and the rebar.

③ Includes 2 inches for 'ED' Joints.

④ 12 inch minimum wall height above all pipes.

MAXIMUM PIPE DIAMETERS	
Precast Structure	Cast-in-place Structure
30"	36"

TABLE OF DIMENSIONS					
LO	Length of Curb Opening	12'-0"	14'-0"	16'-0"	18'-0"
EL	Extension Length	7'-10"	9'-10"	11'-10"	13'-10"
BL	Minimum Boxout Length	16'-0"	18'-0"	20'-0"	22'-0"

FIGURE 6010.545 SHEET 1 OF 4

SUDAS | IOWA DOT

REVISION 5 04-21-20

FIGURE 6010.545 | STANDARD ROAD PLAN | SW-545

SHEET 1 of 4

REVISIONS: Changed well walls to 6 Inch reinforced. Modified 4b1 and 4b2 bar spacing. Modified bars 4e1 and 4e6. Modified SECTION C-C on Sheets 3 and 4.

SUDAS DIRECTOR | DESIGN METHODS ENGINEER

SINGLE OPEN-THROAT CURB INTAKE WITH EXTENDED OPENING

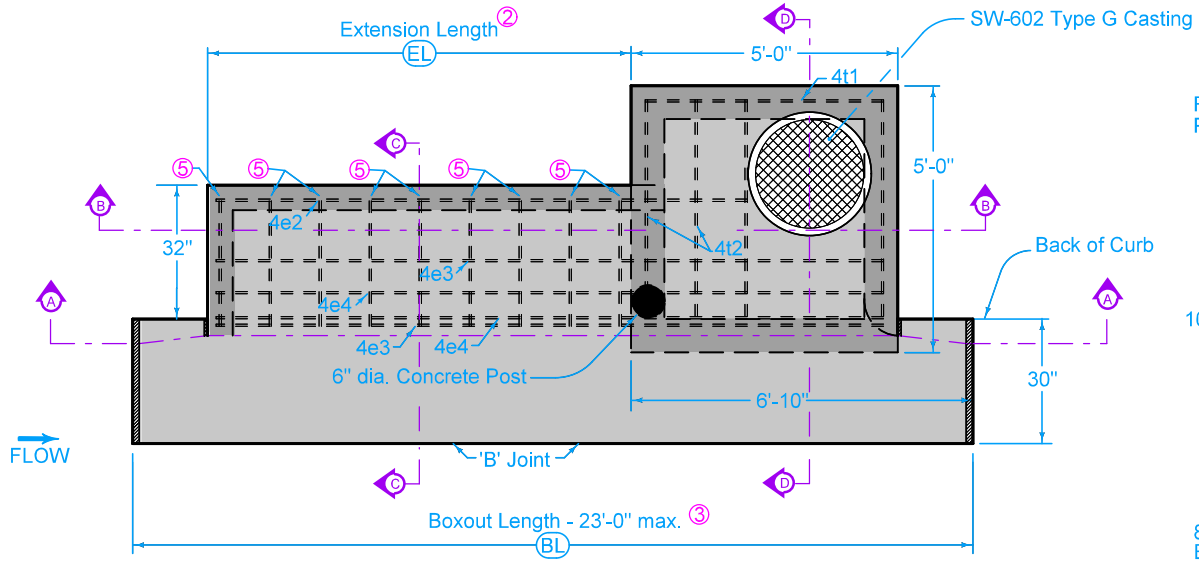

PLAN
TOP REINFORCING PLACEMENT

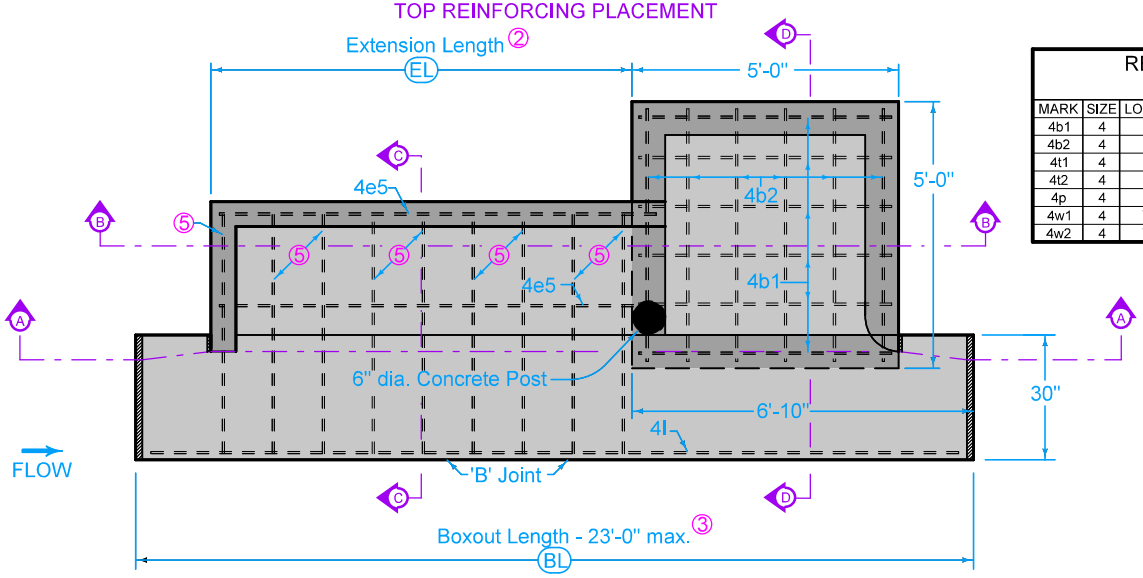

PLAN
BOTTOM REINFORCING PLACEMENT

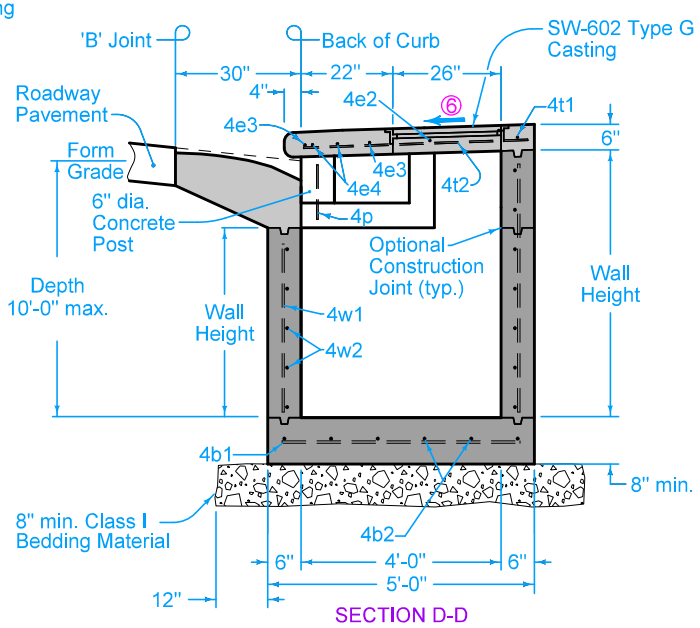

SECTION D-D

REINFORCING BAR LIST Intake Well					
MARK	SIZE	LOCATION	NO.	LENGTH	SPACING
4b1	4	Base	6	4'-6"	11"
4b2	4	Base	6	4'-6"	11"
4t1	4	Top	1	4'-8"	12"
4t2	4	Top	4	4'-3"	See Detail
4p	4	Post	1	13"	
4w1	4	Walls	16	Wall Height minus 4"	14"
4w2	4	Walls	Varies	4'-8"	12"

② Other lengths of opening may be constructed by varying the length of the extension and the rebar.

③ Includes 2 inches for 'ED' Joints.

⑤ 4e1 or 4e6. See Sheets 3 and 4.

⑥ Slope of 1.5% or as specified in the contract documents.

SUDAS | IOWA DOT

FIGURE 6010.545 | STANDARD ROAD PLAN

REVISION 5 04-21-20

SW-545

SHEET 2 of 4

REVISIONS: Changed well walls to 6 Inch reinforced. Modified 4b1 and 4b2 bar spacing. Modified bars 4e1 and 4e6. Modified SECTION C-C on Sheets 3 and 4.

SUDAS DIRECTOR | DESIGN METHODS ENGINEER

SINGLE OPEN-THROAT CURB INTAKE WITH EXTENDED OPENING

FIGURE 6010.545 SHEET 2 OF 4

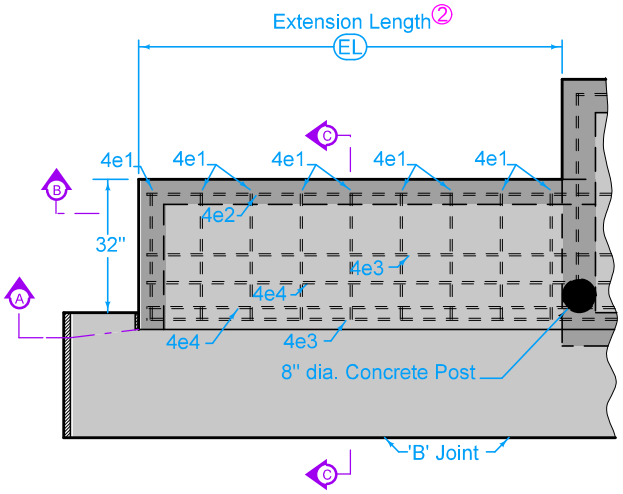

PLAN
TOP OF EXTENSION REINFORCING PLACEMENT

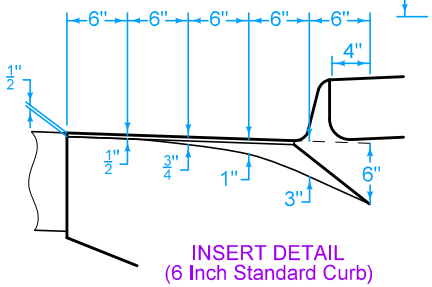

INSERT DETAIL
(6 Inch Standard Curb)

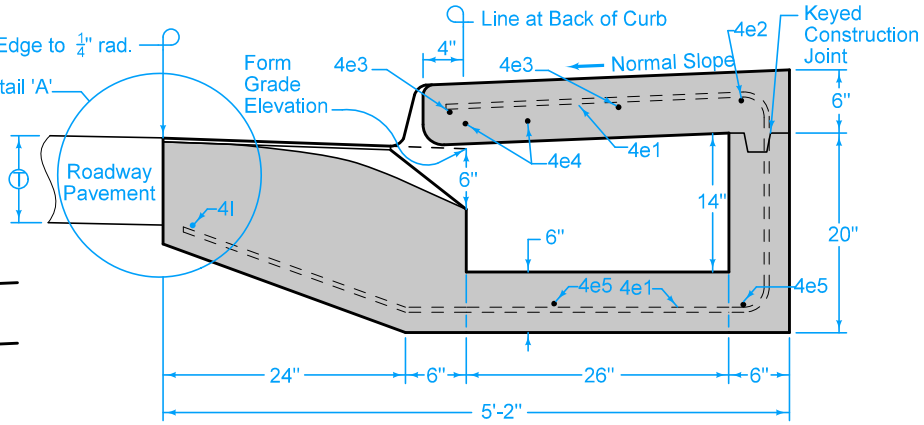

SECTION C-C
(6 Inch Standard Curb)

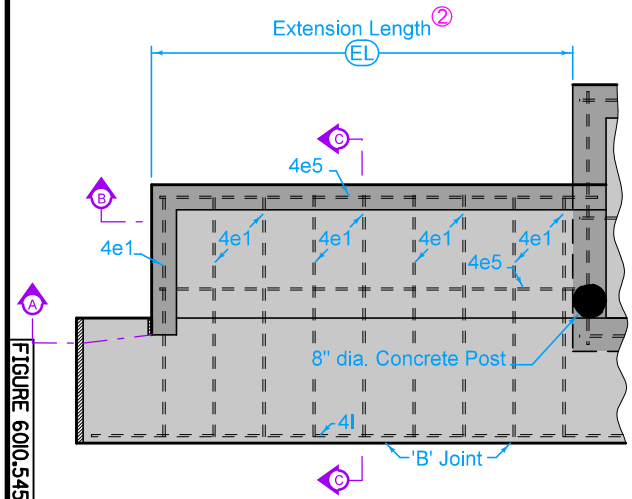

PLAN
BOTTOM OF EXTENSION REINFORCING PLACEMENT

REINFORCING BAR LIST (LO) = 12'-0"						
MARK	SIZE	LOCATION	NO.	LENGTH	WEIGHT	SPACING
4e1	4	Top/Base	9	9'-5½"	56.9	12"
4e2	4	Top	1	10'-0"	6.7	
4e3	4	Top	2	12'-9"	17.0	15½"
4e4	4	Top	2	12'-9"	17.0	6"
4e5	4	Base	2	8'-2"	10.9	22"
4l*	4	Insert	1	15'-10"	10.6	
* With 16'-6" Boxout.				Total	119.1 lbs.	

REINFORCING BAR LIST (LO) = 14'-0"						
MARK	SIZE	LOCATION	NO.	LENGTH	WEIGHT	SPACING
4e1	4	Top/Base	11	9'-5½"	69.5	12"
4e2	4	Top	1	12'-0"	8.0	
4e3	4	Top	2	14'-9"	19.7	15½"
4e4	4	Top	2	14'-9"	19.7	6"
4e5	4	Base	2	10'-2"	13.6	22"
4l*	4	Insert	1	17'-10"	11.9	
* With 18'-6" Boxout.				Total	142.4 lbs.	

REINFORCING BAR LIST (LO) = 16'-0"						
MARK	SIZE	LOCATION	NO.	LENGTH	WEIGHT	SPACING
4e1	4	Top/Base	13	9'-5½"	82.1	12"
4e2	4	Top	1	14'-0"	9.3	
4e3	4	Top	2	16'-9"	22.4	15½"
4e4	4	Top	2	16'-9"	22.4	6"
4e5	4	Base	2	12'-2"	16.2	22"
4l*	4	Insert	1	19'-10"	13.2	
* With 20'-6" Boxout.				Total	165.6 lbs.	

REINFORCING BAR LIST (LO) = 18'-0"						
MARK	SIZE	LOCATION	NO.	LENGTH	WEIGHT	SPACING
4e1	4	Top/Base	15	9'-5½"	94.8	12"
4e2	4	Top	1	16'-0"	10.7	
4e3	4	Top	2	18'-9"	25	15½"
4e4	4	Top	2	18'-9"	25	6"
4e5	4	Base	2	14'-2"	18.9	22"
4l*	4	Insert	1	21'-10"	14.6	
* With 22'-6" Boxout.				Total	189.0 lbs.	

6 INCH STANDARD CURB

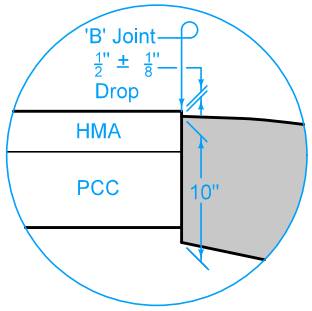

DETAIL 'A'
Use when adjacent pavement is HMA or composite.

BENT BAR DETAILS

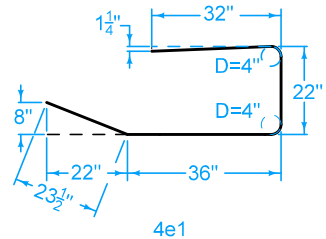

NOTE: ALL DIMENSIONS ARE OUT TO OUT
D = PIN DIAMETER

② Other lengths of opening may be constructed by varying the length of the extension and the rebar.

SUDAS | IOWA DOT

FIGURE 6010.545 | STANDARD ROAD PLAN

REVISION 5 04-21-20

SW-545

SHEET 3 of 4

REVISIONS: Changed wall walls to 6 Inch reinforced. Modified 4b1 and 4b2 bar spacing. Modified bars 4e1 and 4e6. Modified SECTION C-C on Sheets 3 and 4.

SUDAS DIRECTOR | DESIGN METHODS ENGINEER

SINGLE OPEN-THROAT CURB INTAKE WITH EXTENDED OPENING

FIGURE 6010.545 SHEET 3 OF 4

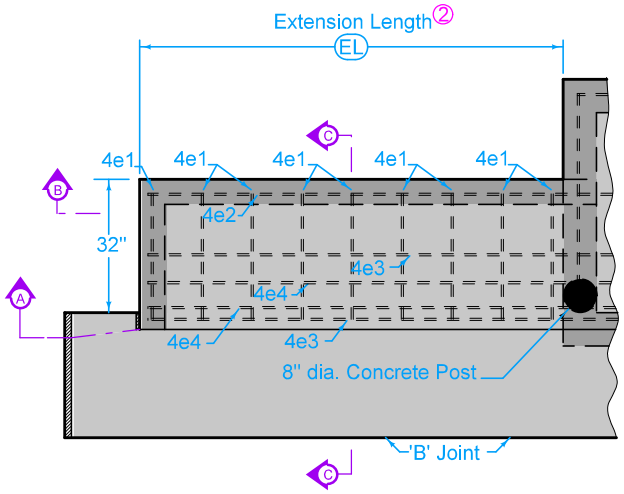

PLAN
TOP OF EXTENSION REINFORCING PLACEMENT

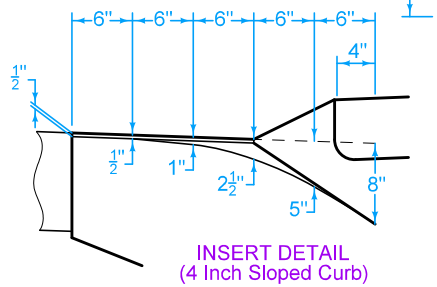

INSERT DETAIL
(4 Inch Sloped Curb)

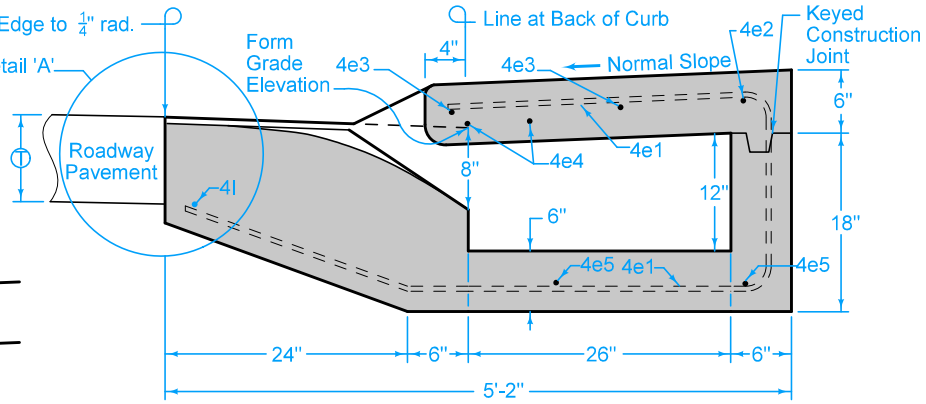

SECTION C-C
(4 Inch Sloped Curb)

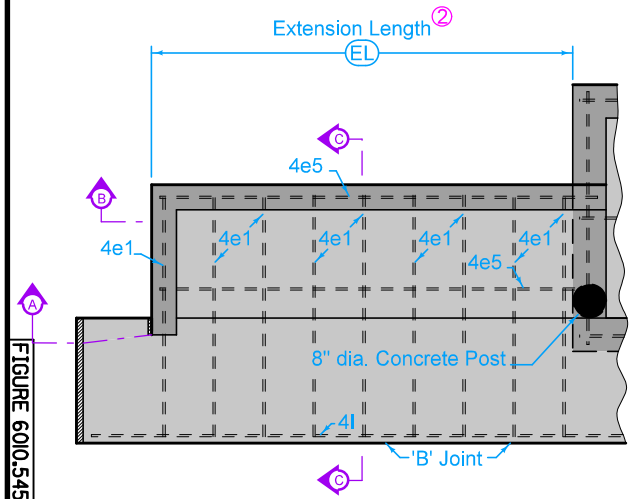

PLAN
BOTTOM OF EXTENSION REINFORCING PLACEMENT

REINFORCING BAR LIST (LO) = 12'-0"						
MARK	SIZE	LOCATION	NO.	LENGTH	WEIGHT	SPACING
4e2	4	Top	1	10'-0"	6.7	
4e3	4	Top	2	12'-9"	17.0	15 1/2"
4e4	4	Top	2	12'-9"	17.0	6"
4e5	4	Base	2	8'-2"	10.9	22"
4e6	4	Top/Base	9	9'-3 1/2"	56.9	12"
4l*	4	Insert	1	15'-10"	10.6	
* With 16'-6" Boxout.				Total	119.0 lbs.	

REINFORCING BAR LIST (LO) = 14'-0"						
MARK	SIZE	LOCATION	NO.	LENGTH	WEIGHT	SPACING
4e2	4	Top	1	12'-0"	8.0	
4e3	4	Top	2	14'-9"	19.7	15 1/2"
4e4	4	Top	2	14'-9"	19.7	6"
4e5	4	Base	2	10'-2"	13.6	22"
4e6	4	Top/Base	11	9'-3 1/2"	69.5	12"
4l*	4	Insert	1	17'-10"	11.9	
* With 18'-6" Boxout.				Total	142.3 lbs.	

REINFORCING BAR LIST (LO) = 16'-0"						
MARK	SIZE	LOCATION	NO.	LENGTH	WEIGHT	SPACING
4e2	4	Top	1	14'-0"	9.3	
4e3	4	Top	2	16'-9"	22.4	15 1/2"
4e4	4	Top	2	16'-9"	22.4	6"
4e5	4	Base	2	12'-2"	16.2	22"
4e6	4	Top/Base	13	9'-3 1/2"	82.1	12"
4l*	4	Insert	1	19'-10"	13.2	
* With 20'-6" Boxout.				Total	165.5 lbs.	

REINFORCING BAR LIST (LO) = 18'-0"						
MARK	SIZE	LOCATION	NO.	LENGTH	WEIGHT	SPACING
4e2	4	Top	1	16'-0"	10.7	
4e3	4	Top	2	18'-9"	25	15 1/2"
4e4	4	Top	2	18'-9"	25	6"
4e5	4	Base	2	14'-2"	18.9	22"
4e6	4	Top/Base	15	9'-3 1/2"	94.8	12"
4l*	4	Insert	1	21'-10"	14.6	
* With 22'-6" Boxout.				Total	188.9 lbs.	

4 INCH SLOPED CURB

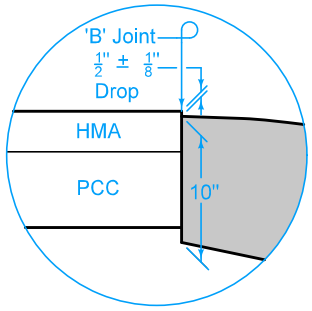

DETAIL 'A'
Use when adjacent pavement is HMA or composite.

BENT BAR DETAILS

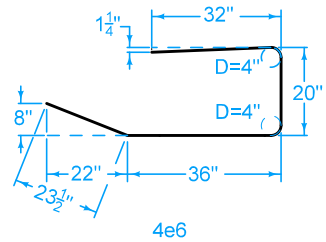

NOTE: ALL DIMENSIONS ARE OUT TO OUT
D = PIN DIAMETER

② Other lengths of opening may be constructed by varying the length of the extension and the rebar.

SUDAS | IOWA DOT

FIGURE 6010.545 | STANDARD ROAD PLAN

REVISION 5 04-21-20

SW-545

SHEET 4 of 4

REVISIONS: Changed wall walls to 6 Inch reinforced. Modified 4b1 and 4b2 bar spacing. Modified bars 4e1 and 4e6. Modified SECTION C-C on Sheets 3 and 4.

SUDAS DIRECTOR | DESIGN METHODS ENGINEER

SINGLE OPEN-THROAT CURB INTAKE WITH EXTENDED OPENING

FIGURE 6010.545 SHEET 4 OF 4

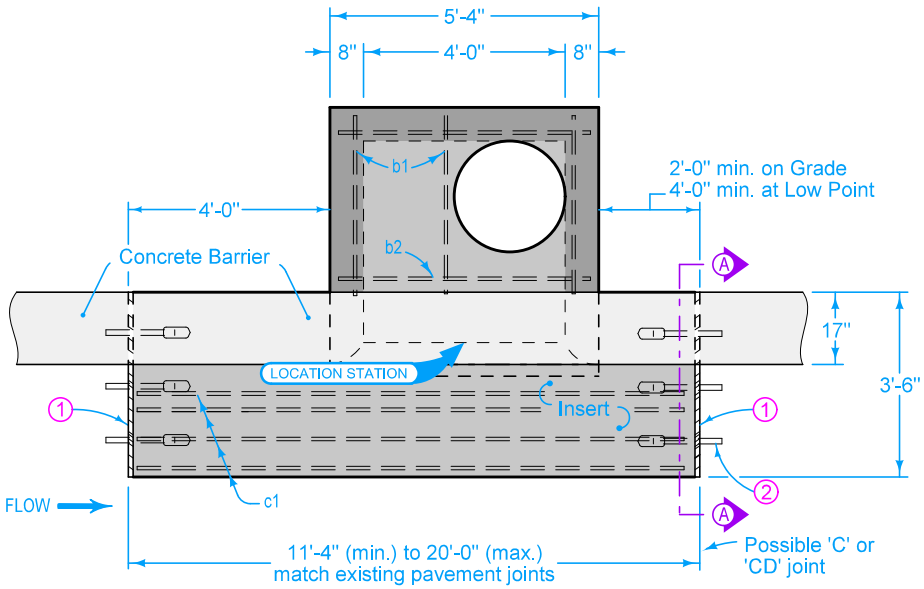

PLAN

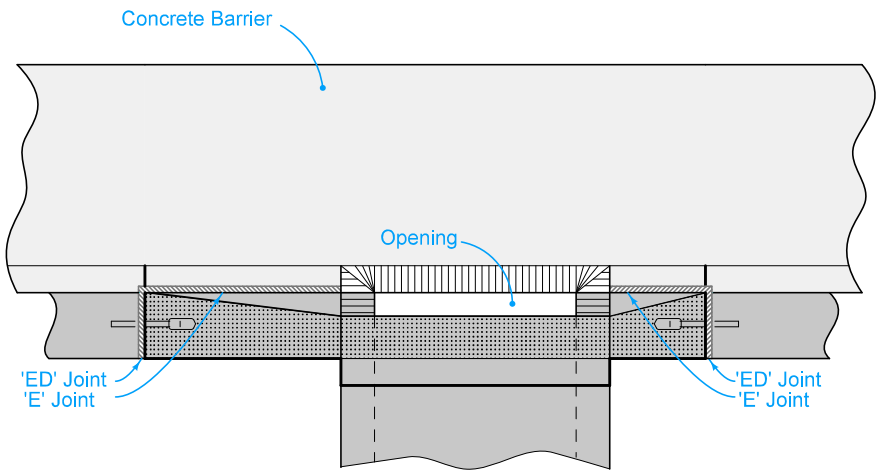

ELEVATION

1 'ED' joint. Refer to PV-101 for details.

2 (6) $1\frac{1}{4}$ inch smooth dowel bars in insert and 6 dowel bars in concrete barrier per installation.

Possible Contract Item:

Intake, SW-546

IOWA DOT

STANDARD ROAD PLAN

REVISION 3 04-17-18

SW-546

SHEET 1 of 2

REVISIONS: Updated line work and Iowa DOT logo. Added concrete fillet detail and maximum pipe sizes.

Brian Smith

APPROVED BY DESIGN METHODS ENGINEER

SINGLE OPEN-THROAT BARRIER INTAKE

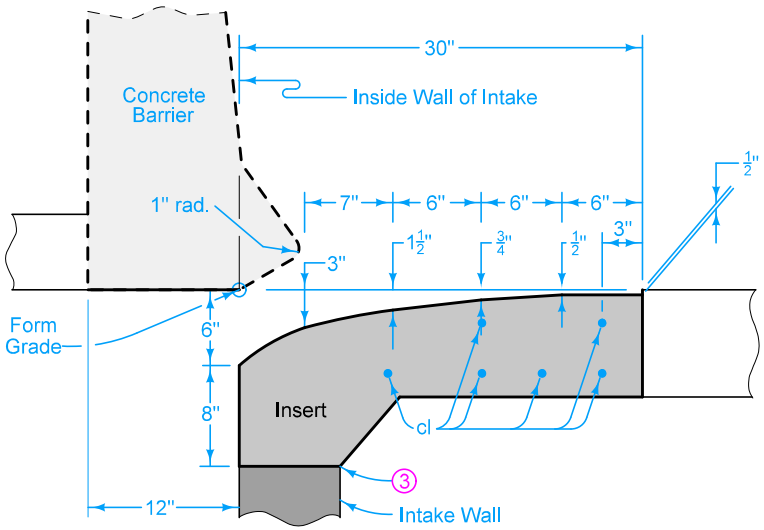

INSERT

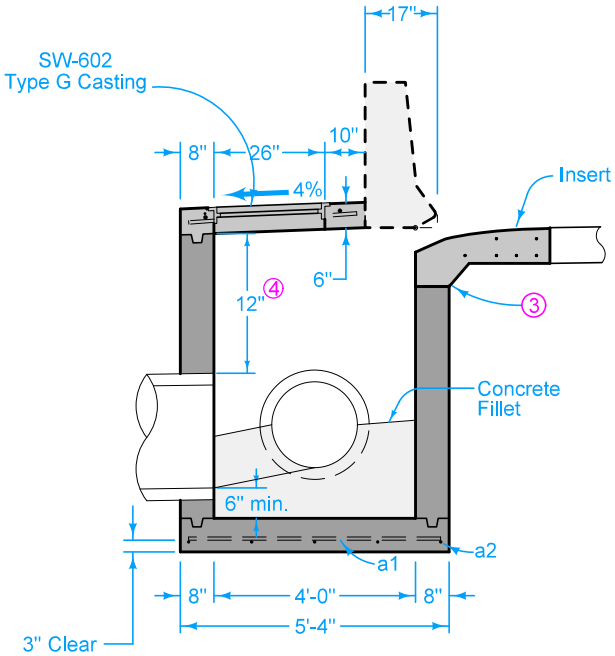

TYPICAL SECTION

② (6) $1\frac{1}{4}$ inch smooth dowel bars in insert and 6 dowel bars in concrete barrier per installation.

③ Trowel smooth and place subgrade paper to prevent bond.

④ 12 inch minimum wall height above all pipes

MAXIMUM PIPE DIAMETERS	
Precast Structure	Cast-in-place Structure
30"	36"

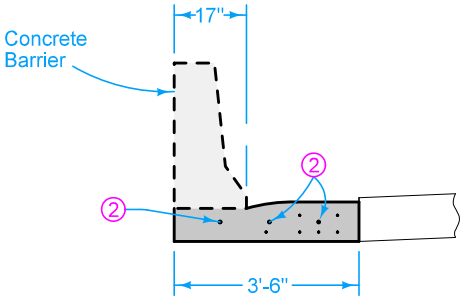

SECTION A-A

REINFORCING BAR LIST					
MARK	LOCATION	NO.	LENGTH	WEIGHT	SPACING
a1	Base	5	5'-0"	16.7	15"
a2	Base	5	5'-0"	16.7	15"
b1	Top	3	3'-4"	6.7	See Detail
b2	Top	2	5'-0"	6.7	See Detail
c1	Insert	6	11'-1"	44.4	See Detail
c1	Insert	6	13'-1"	52.4	See Detail
			Total	91 lbs. or 99 lbs.	

IOWA DOT

STANDARD ROAD PLAN

REVISION 3 04-17-18

SW-546

SHEET 2 of 2

REVISIONS: Updated line work and Iowa DOT logo. Added concrete fillet detail and maximum pipe sizes.

Brian Smith
APPROVED BY DESIGN METHODS ENGINEER

SINGLE OPEN-THROAT BARRIER INTAKE

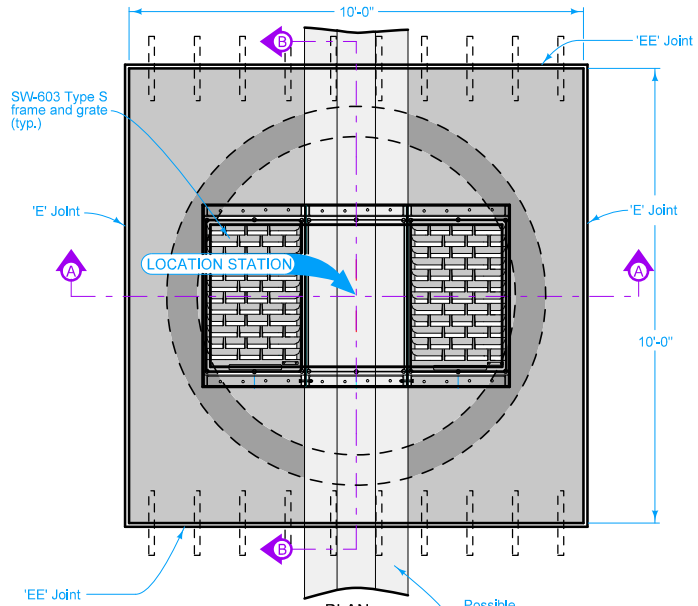

PLAN
(CIRCULAR)

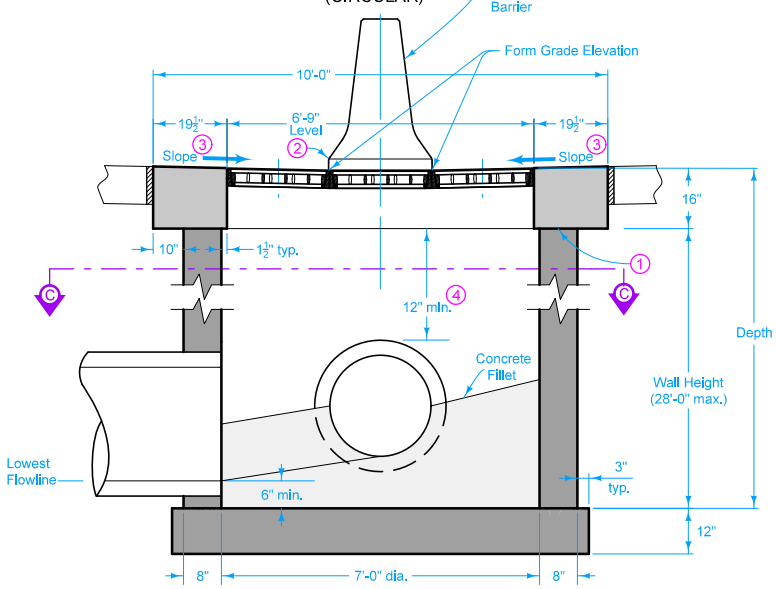

SECTION A-A
(CIRCULAR OPTION)

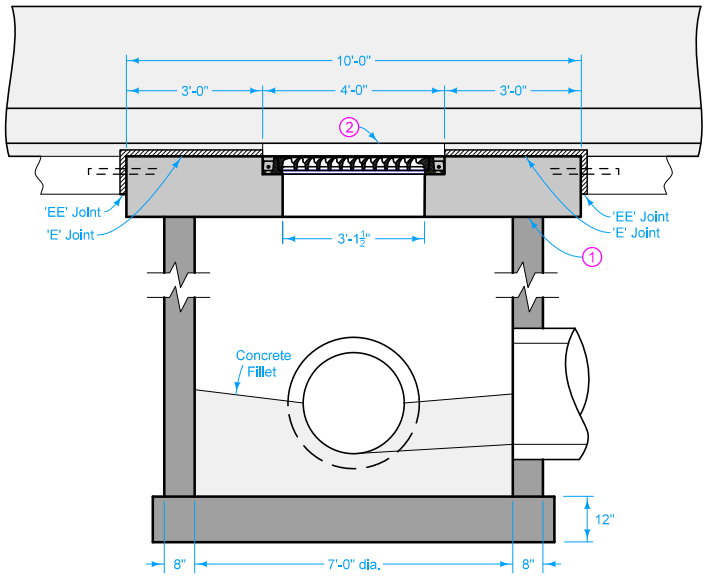

SECTION B-B
(CIRCULAR OPTION)

Unless specified otherwise, the contractor has the option to either install a precast circular structure or construct a rectangular structure.

All plate and edge armor steel to be ASTM A 36, galvanized after fabrication.

Remove center grate before constructing concrete barrier.

Cast frames into intake top so tops of grates are $\frac{1}{4}$" below Form Grade Elevation. Bolt intake frames together on both sides with four $\frac{1}{2}$" x 4" bolts.

For joint details, refer to PV-101.

Maximum pipe size for the rectangular option is 60 inches. Refer to the table below for maximum pipe size information related to the circular option.

MAXIMUM PIPE DIAMETER FOR 2 PIPES	
at 180° Separation	At 90° Separation
48 inches	36 inches

1. Trowel smooth and place two layers of 30 pound roofing felt to prevent bond.
2. Leave 3 inch opening through barrier over the intake.
3. Match slope of top and grate to adjacent pavement.
4. 12 inch minimum wall height above all pipes.

Possible Contract Item:
Barrier Intake, SW-547

Possible Tabulation:
104-5B

IOWA DOT

STANDARD ROAD PLAN

REVISION	
5	04-17-18

SW-547

SHEET 1 of 7

REVISIONS: Changed 'Invert' callout to 'Concrete Fillet'. Added maximum pipe size information.

Brian Smith
APPROVED BY DESIGN METHODS ENGINEER

TRIPLE-GRATE BARRIER INTAKE

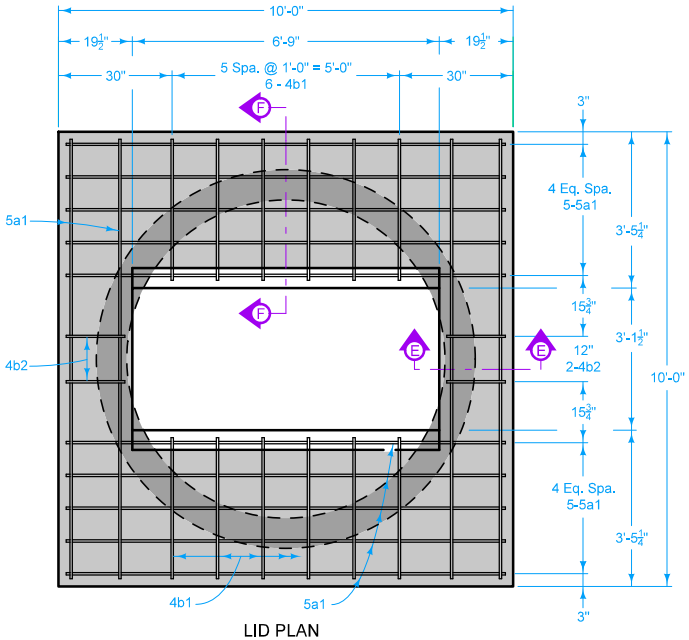

LID PLAN
(CIRCULAR OPTION)

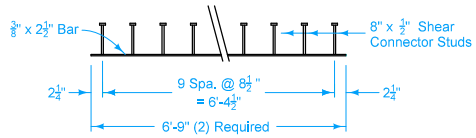

FRAME RING EDGE ARMOR

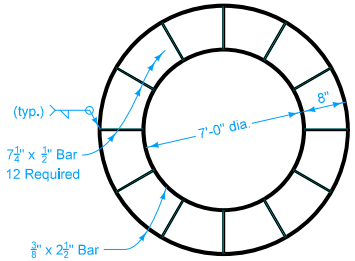

WALL EDGE ARMOR

LID REINFORCING BAR LIST - EPOXY COATED (CIRCULAR OPTION)					
BAR	LOCATION	SHAPE	NO.	LENGTH	WEIGHT
5a1	Lid, Longitudinal & Transverse	—	28	9'-8"	282
4b1	Lid Hoop		12	8'-3"	66
4b2	Lid Hoop		4	5'-4"	14
EPOXY COATED REINFORCING STEEL - TOTAL					362

LID BENT BAR DETAILS (CIRCULAR OPTION)

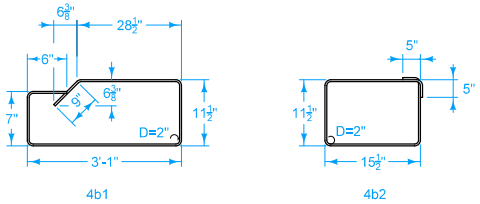

NOTE: ALL DIMENSIONS SHOWN OUT TO OUT. D = PIN DIAMETER

LID QUANTITY SUMMARY (CIRCULAR OPTION)	
Concrete	3.8 CY*
Epoxy Coated Reinforcing Steel	362 LB

* Based on Minimum thickness = 16"

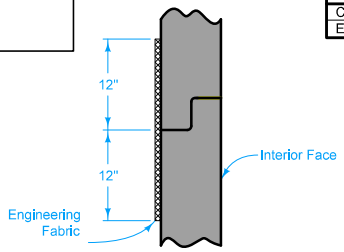

WALL JOINT DETAIL

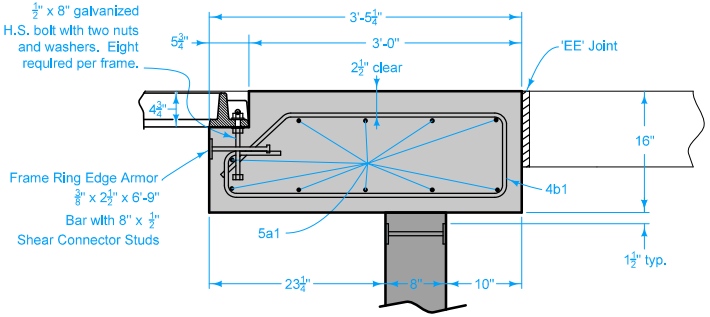

SECTION F-F

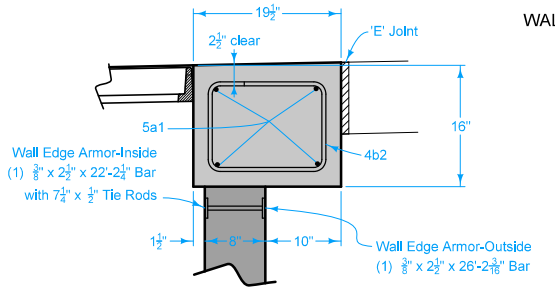

SECTION E-E

LID (CIRCULAR OPTION)

IOWA DOT

STANDARD ROAD PLAN

REVISION	
5	04-17-18

SW-547

SHEET 2 of 7

REVISIONS: Changed 'Invert' callout to 'Concrete Fillet'. Added maximum pipe size information.

Brian Smith
APPROVED BY DESIGN METHODS ENGINEER

TRIPLE-GRATE BARRIER INTAKE

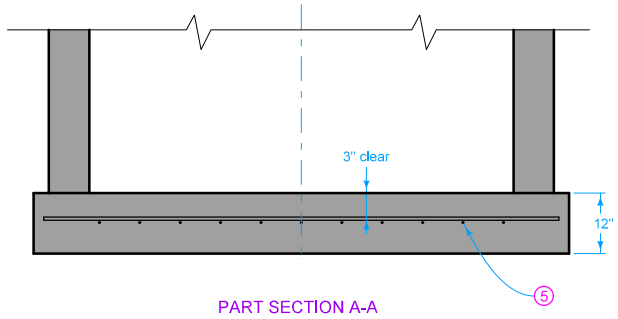

PART SECTION A-A

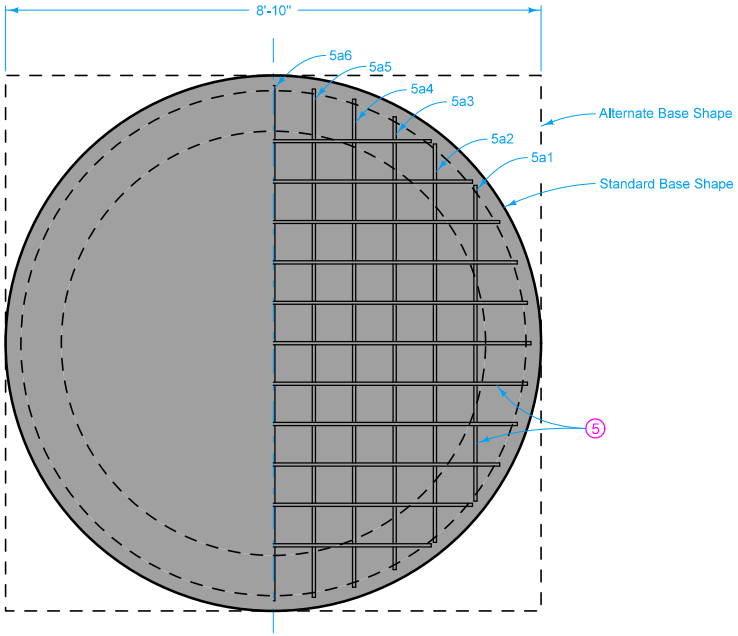

BASE PLAN
(CIRCULAR OPTION)

BASE (CIRCULAR OPTION)

BASE REINFORCING BAR LIST - EPOXY COATED (CIRCULAR OPTION)					
BAR	LOCATION	SHAPE	NO.	LENGTH	WEIGHT
5a1	Base, Longit. & Transverse	——	4	5'-3"	22
5a2	Base, Longit. & Transverse	——	4	6'-7"	27
5a3	Base, Longit. & Transverse	——	4	7'-6"	31
5a4	Base, Longit. & Transverse	——	4	8'-0"	33
5a5	Base, Longit. & Transverse	——	4	8'-4"	35
5a6	Base, Longit. & Transverse	——	2	8'-6"	18
EPOXY COATED REINFORCING STEEL - TOTAL					166

BASE QUANTITY SUMMARY (CIRCULAR OPTION)	
Concrete	2.3 CY*
Epoxy Coated Reinforcing Steel	166 LB*

* Based on Standard Base Shape

5 #5 at 8 inch centers each direction or equivalent welded wire fabric.

IOWA DOT

STANDARD ROAD PLAN

REVISION 5 04-17-18

SW-547

SHEET 3 of 7

REVISIONS: Changed 'Invert' callout to 'Concrete Fillet'. Added maximum pipe size information.

Brian Smith
APPROVED BY DESIGN METHODS ENGINEER

TRIPLE-GRATE BARRIER INTAKE

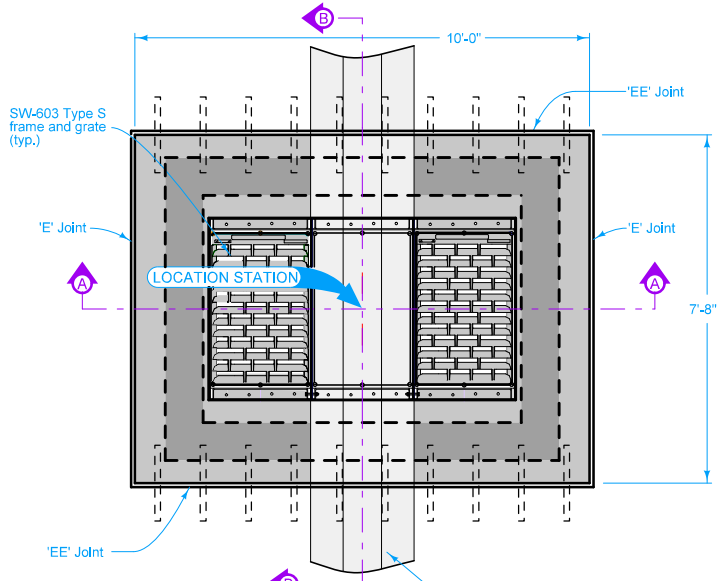

PLAN
(RECTANGULAR)

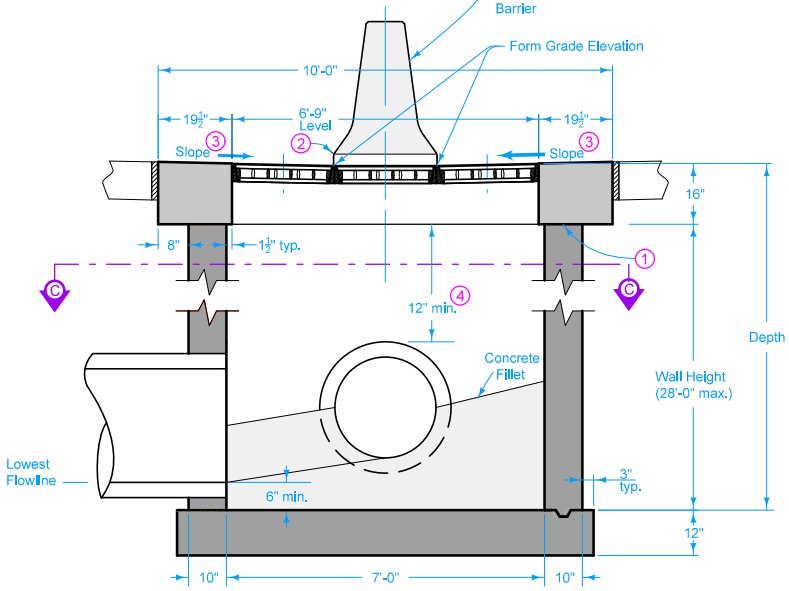

SECTION A-A
(RECTANGULAR OPTION)

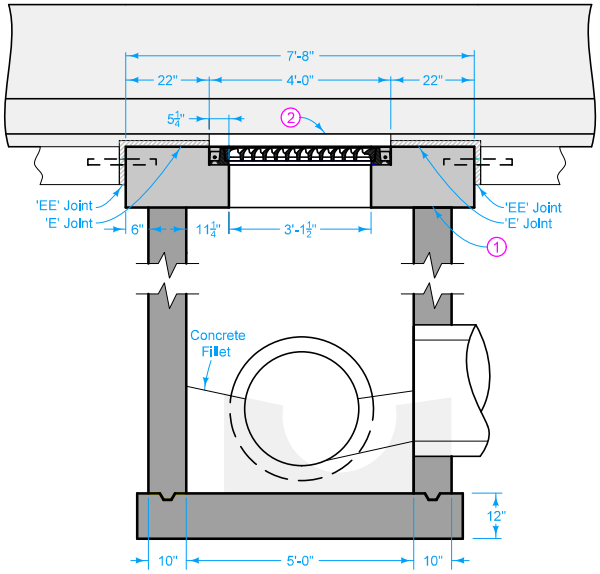

SECTION B-B
(RECTANGULAR OPTION)

1. Trowel smooth and place two layers of 30 pound roofing felt to prevent bond.
2. Leave 3 inch opening through barrier over the intake.
3. Match slope of top and grate to adjacent pavement.
4. 12 inch minimum wall height above all pipes.

IOWA DOT

STANDARD ROAD PLAN

REVISION	
5	04-17-18

SW-547

SHEET 4 of 7

REVISIONS: Changed 'Invert' callout to 'Concrete Fillet'. Added maximum pipe size information.

Brian Smith
APPROVED BY DESIGN METHODS ENGINEER

TRIPLE-GRATE BARRIER INTAKE

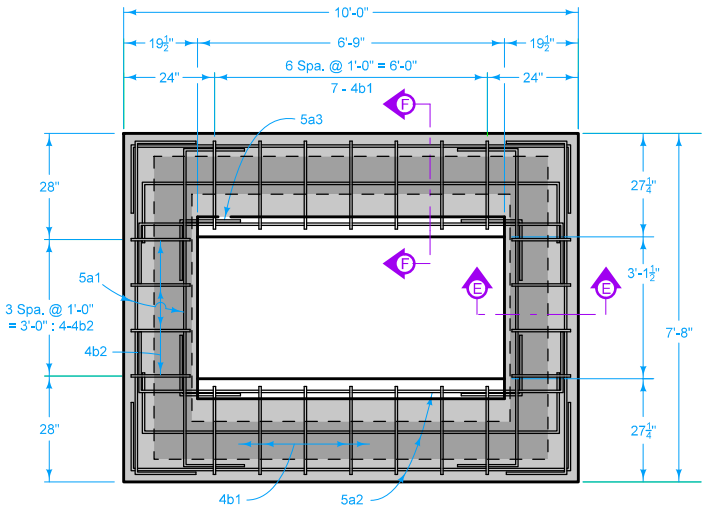

LID PLAN
(RECTANGULAR OPTION)

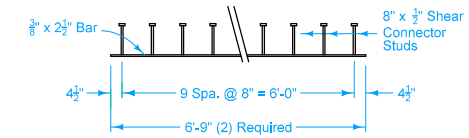

FRAME RING EDGE ARMOR

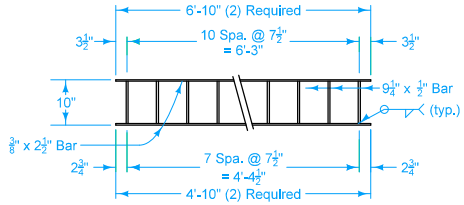

WALL EDGE ARMOR

LID REINFORCING BAR LIST - EPOXY COATED (RECTANGULAR OPTION)					
BAR	LOCATION	SHAPE	NO.	LENGTH	WEIGHT
5a1	Lid, Longitudinal		8	10'-2"	85
5a2	Lid, Transverse		10	12'-6"	130
5a3	Lid, Interior, Corners		4	3'-0"	13
4b1	Lid Hoop		14	5'-11"	55
4b2	Lid Hoop		8	5'-4"	29
	EPOXY COATED REINFORCING STEEL - TOTAL				312

LID BENT BAR DETAILS (RECTANGULAR OPTION)

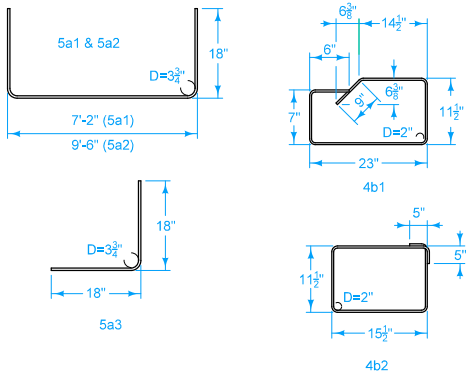

NOTE: ALL DIMENSIONS SHOWN OUT TO OUT. D = PIN DIAMETER

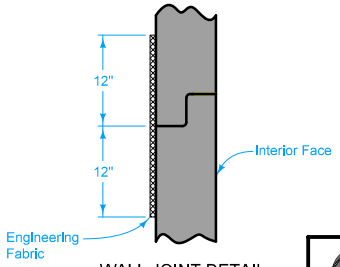

WALL JOINT DETAIL

LID QUANTITY SUMMARY (RECTANGULAR OPTION)	
Concrete	2.7 CY
Epoxy Coated Reinforcing Steel	312 LB

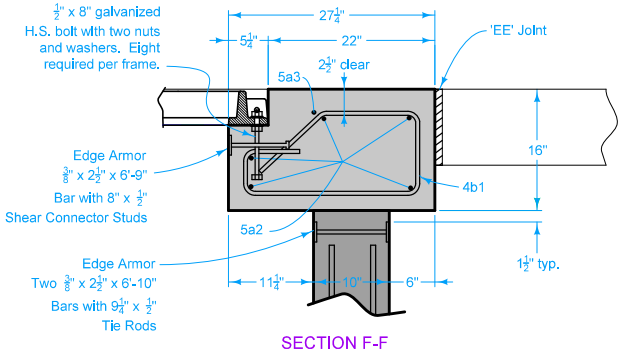

SECTION F-F

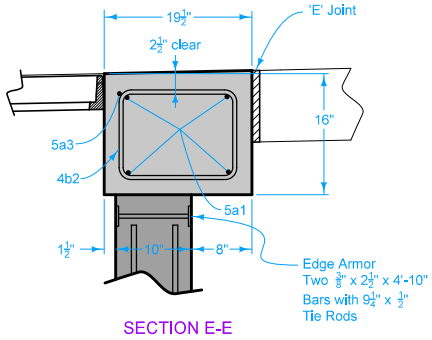

SECTION E-E

LID (RECTANGULAR OPTION)

IOWA DOT

STANDARD ROAD PLAN

REVISION	
5	04-17-18

SW-547

SHEET 5 of 7

REVISIONS: Changed 'Invert' callout to 'Concrete Fillet'. Added maximum pipe size information.

Brian Smith
APPROVED BY DESIGN METHODS ENGINEER

TRIPLE-GRATE BARRIER INTAKE

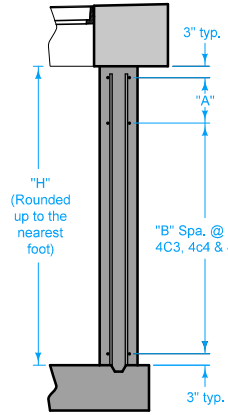

PART SECTION A-A
(Where H = 3' to 7')

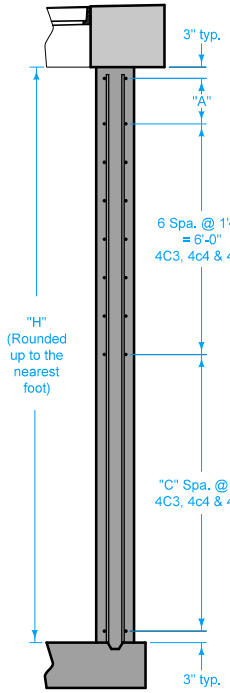

PART SECTION A-A
(Where H = 8' to 15')

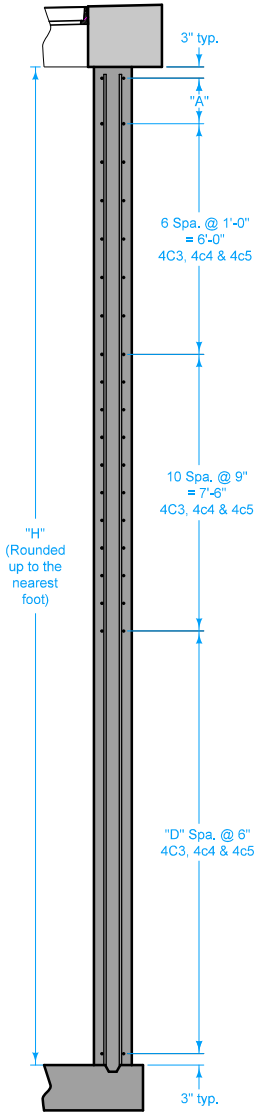

PART SECTION A-A
(Where H = 16' to 28')

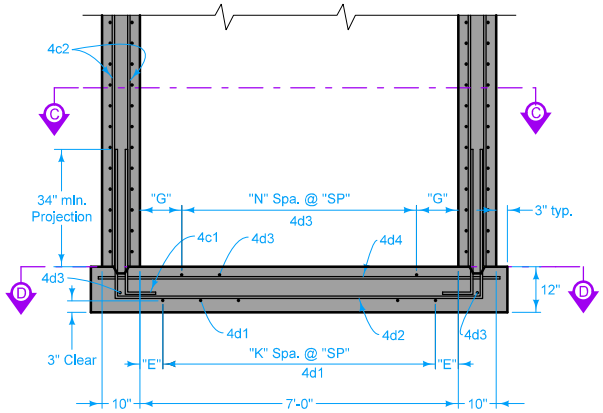

SECTION A-A

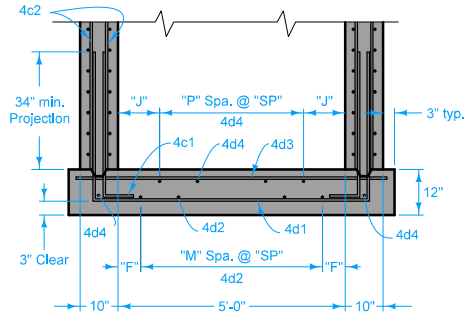

SECTION B-B

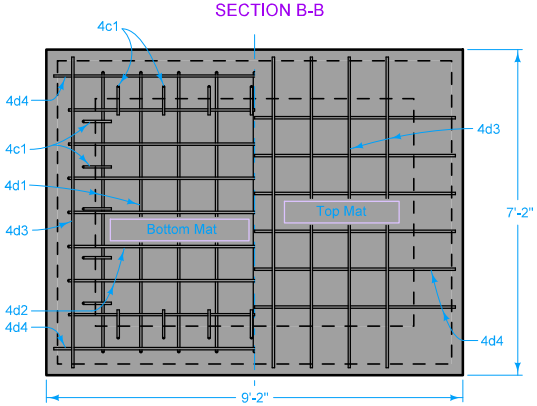

SECTION D-D
BASE REINFORCING

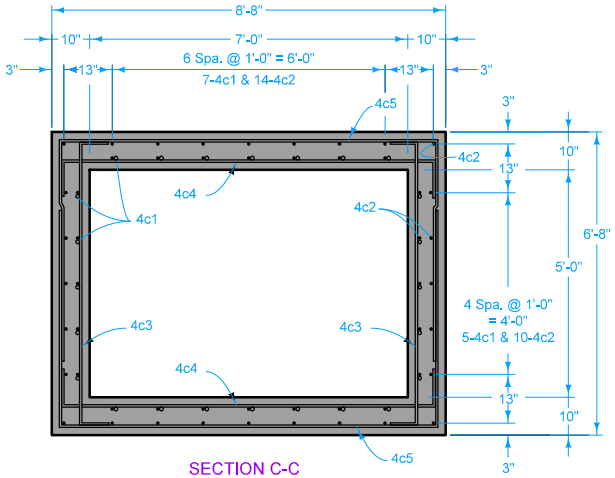

SECTION C-C

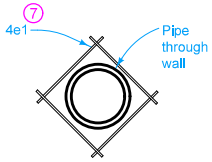

PIPE REINFORCING

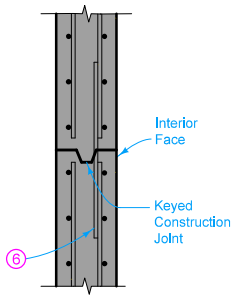

C.I.P. Wall
CONSTRUCTION JOINT

6 Install one set of 4r1 x 3'-0" dowel bars @ 12 inch spacing at any wall joints. Twenty-eight 4r1 bars required per joint, total weight = 56 lbs.

7 4e1 bar length to be pipe diameter plus 12 inches. Place 4e1 bar inside of vertical reinforcing. Shift main reinforcing bars as required for pipe entrance. Field cut bars to maintain 3 inch clearance from bottom and 2 inch clearance from face of walls. Eight 4e1 bars required per pipe entrance.

WALLS (RECTANGULAR OPTION)

IOWA DOT

STANDARD ROAD PLAN

REVISION	
5	04-17-18

SW-547

SHEET 6 of 7

REVISIONS: Changed 'Invert' callout to 'Concrete Fillet'. Added maximum pipe size information.

Brian Smith
APPROVED BY DESIGN METHODS ENGINEER

TRIPLE-GRATE BARRIER INTAKE

VARIABLE DIMENSIONS AND QUANTITIES FOR RECTANGULAR OPTION

Dimensions						Bar List																																				Quantities				
	(8)					4c1		4c2		4c3 (9)					4c4 (9)					4c5 (9)					4d1				4d2				4d3				4d4				Concrete - Cu. Yds.				Steel
"H"	"A"	"E"	"F"	"G"	"J"	No.	L	No.	L	No. of Spaces			NO.	L	No. of Spaces			No.	L	No. of Spaces			NO.	L	SP	"K"	No.	L	SP	"M"	No.	L	SP	"N"	No.	L	SP	"P"	No.	L	Base	Lid	Walls	Total	(10)
(Ft.)	(In.)	(In.)	(In.)	(In.)	(In.)					"B"	"C"	"D"			"B"	"C"	"D"			"B"	"C"	"D"																							Total lbs.
3	6	2"	0"	7"	5"	24	4'-3"	--	–	2	--	–	8	7'-8"	2	–	–	8	9'-8"	2	--	–	8	17'-0"	10"	8	9	13'-5"	10"	6	7	15'-5"	10"	7	10	6'-10"	10"	5	8	8'-10"	2.4	2.7	2.5	7.7	810
4	6	2"	0"	7"	5"	24	4'-3"	52	3'-10"	3	--	–	10	7'-8"	3	–	–	10	9'-8"	3	--	–	10	17'-0"	10"	8	9	13'-5"	10"	6	7	15'-5"	10"	7	10	6'-10"	10"	5	8	8'-10"	2.4	2.7	3.4	8.5	989
5	6	2"	0"	7"	5"	24	4'-3"	52	4'-10"	4	--	–	12	7'-8"	4	–	–	12	9'-8"	4	--	–	12	17'-0"	10"	8	9	13'-5"	10"	6	7	15'-5"	10"	7	10	6'-10"	10"	5	8	8'-10"	2.4	2.7	4.2	9.4	1,068
6	6	2"	0"	7"	5"	24	4'-3"	52	5'-10"	5	--	–	14	7'-8"	5	–	–	14	9'-8"	5	--	–	14	17'-0"	10"	8	9	13'-5"	10"	6	7	15'-5"	10"	7	10	6'-10"	10"	5	8	8'-10"	2.4	2.7	5.1	10.2	1,150
7	6	2"	2"	6"	6"	24	4'-3"	52	6'-10"	6	--	–	16	7'-8"	6	–	–	16	9'-8"	6	--	–	16	17'-0"	8"	10	11	13'-5"	8"	7	8	15'-5"	8"	9	12	6'-10"	8"	6	9	8'-10"	2.4	2.7	5.9	11.0	1,273
8	9	2"	2"	6"	6"	24	4'-3"	52	7'-10"	6	1	–	18	7'-8"	6	1	–	18	9'-8"	6	1	–	18	17'-0"	8"	10	11	13'-5"	8"	7	8	15'-5"	8"	9	12	6'-10"	8"	6	9	8'-10"	2.4	2.7	6.8	11.9	1,353
9	12	2"	2"	6"	6"	24	4'-3"	52	8'-10"	6	2	–	20	7'-8"	6	2	–	20	9'-8"	6	2	–	20	17'-0"	8"	10	11	13'-5"	8"	7	8	15'-5"	8"	9	12	6'-10"	8"	6	9	8'-10"	2.4	2.7	7.6	12.7	1,434
10	6	2"	2"	6"	6"	24	4'-3"	52	9'-10"	6	4	–	24	7'-8"	6	4	–	24	9'-8"	6	4	–	24	17'-0"	8"	10	11	13'-5"	8"	7	8	15'-5"	8"	9	12	6'-10"	8"	6	9	8'-10"	2.4	2.7	8.4	13.6	1,562
11	9	2"	2"	6"	6"	24	4'-3"	52	10'-10"	6	5	–	26	7'-8"	6	5	–	26	9'-8"	6	5	–	26	17'-0"	8"	10	11	13'-5"	8"	7	8	15'-5"	8"	9	12	6'-10"	8"	6	9	8'-10"	2.4	2.7	9.3	14.4	1,641
12	12	2"	2"	6"	6"	24	4'-3"	52	11'-10"	6	6	–	28	7'-8"	6	6	–	28	9'-8"	6	6	–	28	17'-0"	8"	10	11	13'-5"	8"	7	8	15'-5"	8"	9	12	6'-10"	8"	6	9	8'-10"	2.4	2.7	10.1	15.3	1,722
13	6	2"	2"	6"	6"	24	4'-3"	52	12'-10"	6	8	–	32	7'-8"	6	8	–	32	9'-8"	6	8	–	32	17'-0"	8"	10	11	13'-5"	8"	7	8	15'-5"	8"	9	12	6'-10"	8"	6	9	8'-10"	2.4	2.7	11.0	16.1	1,849
14	9	0"	0"	3"	3"	24	4'-3"	52	13'-10"	6	9	–	34	7'-8"	6	9	–	34	9'-8"	6	9	–	34	17'-0"	6"	14	15	13'-5"	6"	10	11	15'-5"	6"	13	16	6'-10"	6"	12	15	8'-10"	2.4	2.7	11.8	17.0	2,050
15	12	0"	0"	3"	3"	24	4'-3"	52	14'-10"	6	10	–	36	7'-8"	6	10	–	36	9'-8"	6	10	–	36	17'-0"	6"	14	15	13'-5"	6"	10	11	15'-5"	6"	13	16	6'-10"	6"	12	15	8'-10"	2.4	2.7	12.7	17.8	2,129
16	12	0"	0"	3"	3"	24	4'-3"	52	15'-10"	6	10	2	40	7'-8"	6	10	2	40	9'-8"	6	10	2	40	17'-0"	6"	14	15	13'-5"	6"	10	11	15'-5"	6"	13	16	6'-10"	6"	12	15	8'-10"	2.4	2.7	13.5	18.6	2,256
17	12	0"	0"	3"	3"	24	4'-3"	52	16'-10"	6	10	4	44	7'-8"	6	10	4	44	9'-8"	6	10	4	44	17'-0"	6"	14	15	13'-5"	6"	10	11	15'-5"	6"	13	16	6'-10"	6"	12	15	8'-10"	2.4	2.7	14.4	19.5	2,383
18	12	0"	0"	3"	3"	24	4'-3"	52	17'-10"	6	10	6	48	7'-8"	6	10	6	48	9'-8"	6	10	6	48	17'-0"	6"	14	15	13'-5"	6"	10	11	15'-5"	6"	13	16	6'-10"	6"	12	15	8'-10"	2.4	2.7	15.2	20.3	2,509
19	12	0"	0"	3"	3"	24	4'-3"	52	18'-10"	6	10	8	52	7'-8"	6	10	8	52	9'-8"	6	10	8	52	17'-0"	6"	14	15	13'-5"	6"	10	11	15'-5"	6"	13	16	6'-10"	6"	12	15	8'-10"	2.4	2.7	16.0	21.2	2,636
20	12	0"	0"	3"	3"	24	4'-3"	52	19'-10"	6	10	10	56	7'-8"	6	10	10	56	9'-8"	6	10	10	56	17'-0"	6"	14	15	13'-5"	6"	10	11	15'-5"	6"	13	16	6'-10"	6"	12	15	8'-10"	2.4	2.7	16.9	22.0	2,763
21	12	0"	0"	3"	3"	24	4'-3"	52	20'-10"	6	10	12	60	7'-8"	6	10	12	60	9'-8"	6	10	12	60	17'-0"	6"	14	15	13'-5"	6"	10	11	15'-5"	6"	13	16	6'-10"	6"	12	15	8'-10"	2.4	2.7	17.7	22.9	2,888
22	12	0"	0"	3"	3"	24	4'-3"	52	21'-10"	6	10	14	64	7'-8"	6	10	14	64	9'-8"	6	10	14	64	17'-0"	6"	14	15	13'-5"	6"	10	11	15'-5"	6"	13	16	6'-10"	6"	12	15	8'-10"	2.4	2.7	18.6	23.7	3,015
23	12	0"	0"	3"	3"	24	4'-3"	52	22'-10"	6	10	16	68	7'-8"	6	10	16	68	9'-8"	6	10	16	68	17'-0"	6"	14	15	13'-5"	6"	10	11	15'-5"	6"	13	16	6'-10"	6"	12	15	8'-10"	2.4	2.7	19.4	24.6	3,141
24	12	0"	0"	3"	3"	24	4'-3"	52	23'-10"	6	10	18	72	7'-8"	6	10	18	72	9'-8"	6	10	18	72	17'-0"	6"	14	15	13'-5"	6"	10	11	15'-5"	6"	13	16	6'-10"	6"	12	15	8'-10"	2.4	2.7	20.3	25.4	3,269
25	12	0"	0"	3"	3"	24	4'-3"	52	24'-10"	6	10	20	76	7'-8"	6	10	20	76	9'-8"	6	10	20	76	17'-0"	6"	14	15	13'-5"	6"	10	11	15'-5"	6"	13	16	6'-10"	6"	12	15	8'-10"	2.4	2.7	21.1	26.3	3,395
26	12	0"	0"	3"	3"	24	4'-3"	52	25'-10"	6	10	22	80	7'-8"	6	10	22	80	9'-8"	6	10	22	80	17'-0"	6"	14	15	13'-5"	6"	10	11	15'-5"	6"	13	16	6'-10"	6"	12	15	8'-10"	2.4	2.7	22.0	27.1	3,521
27	12	0"	0"	3"	3"	24	4'-3"	52	26'-10"	6	10	24	84	7'-8"	6	10	24	84	9'-8"	6	10	24	84	17'-0"	6"	14	15	13'-5"	6"	10	11	15'-5"	6"	13	16	6'-10"	6"	12	15	8'-10"	2.4	2.7	22.8	27.9	3,647
28	12	0"	0"	3"	3"	24	4'-3"	52	27'-10"	6	10	26	88	7'-8"	6	10	26	88	9'-8"	6	10	26	88	17'-0"	6"	14	15	13'-5"	6"	10	11	15'-5"	6"	13	16	6'-10"	6"	12	15	8'-10"	2.4	2.7	23.7	28.8	3,774

BENT BAR DETAILS (RECTANGULAR OPTION)

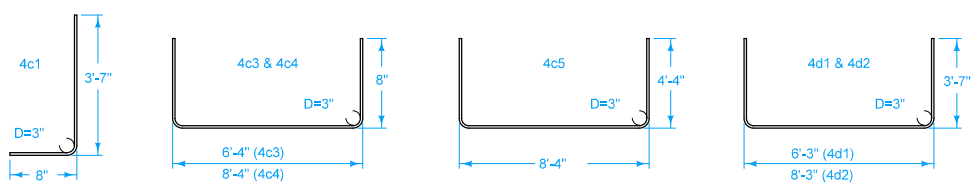

NOTE: ALL DIMENSIONS SHOWN OUT TO OUT. D = PIN DIAMETER

(8) A = First bar spacing at top of wall. Minimum spacing is 3 inches. Maximum spacing is 12 inches. Adjust as necessary.

(9) See Section A-A on sheet 2 for spacing.

(10) Quantity includes 312 lbs. for lid.

IOWA DOT

STANDARD ROAD PLAN

REVISION 5 04-17-18

SW-547

SHEET 7 of 7

REVISIONS: Changed 'Invert' callout to 'Concrete Fillet'. Added maximum pipe size information.

Brian Smith

APPROVED BY DESIGN METHODS ENGINEER

TRIPLE-GRATE BARRIER INTAKE

REINFORCEMENT (RECTANGULAR OPTION)

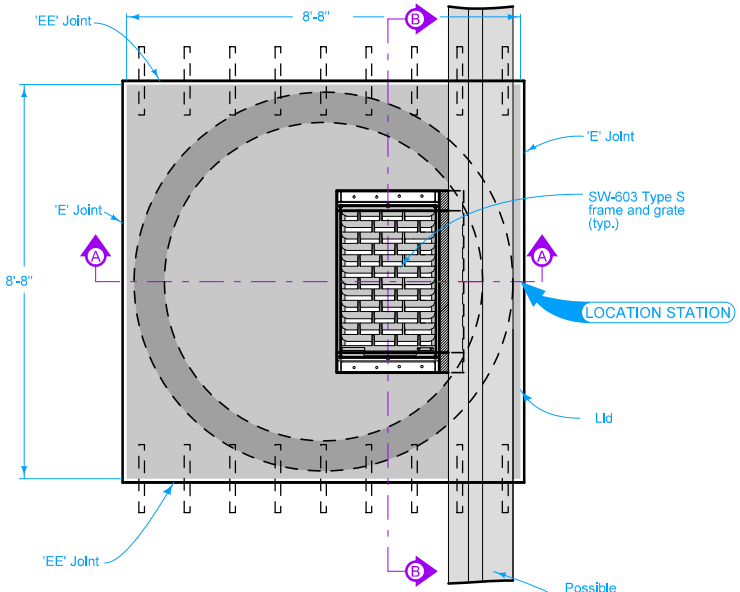

PLAN (SHALLOW)

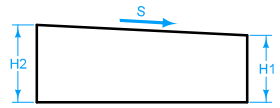

DETAIL 'A'

Dimensions		
"S" (%)	"H1" (In.)	"H2" (In.)
1	16.33	16.89
2	16.67	17.78
3	17.00	18.67
4	17.33	19.56
5	17.67	20.45
6	18.00	21.34

All plate and edge armor steel to be ASTM A 36, galvanized after fabrication.

Remove cover plate before constructing concrete barrier.

Cast frames Into Intake top so tops of grates are $\frac{1}{4}$" below Form Grade Elevation. Bolt intake frames together on both sides with four $\frac{1}{2}$" x 4" bolts.

For joint details, refer to PV-101.

Maximum Pipe Diameter for 2 Pipes	
at 180° Separation	At 90° Separation
48 inches	36 inches

1. Trowel smooth and place two layers of 30 pound roofing felt to prevent bond.
2. Match slope of top and grate to adjacent pavement.
3. 12 inch minimum above all pipes.

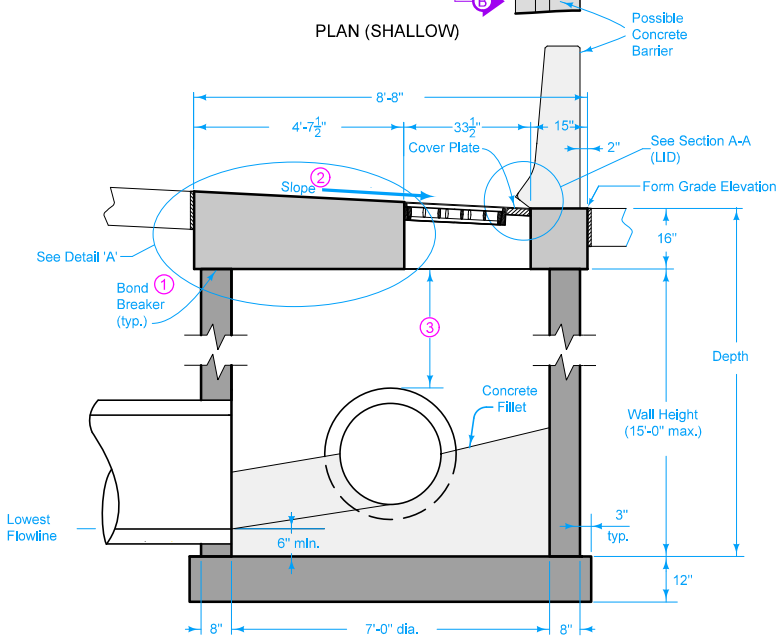

SECTION A-A (SHALLOW)

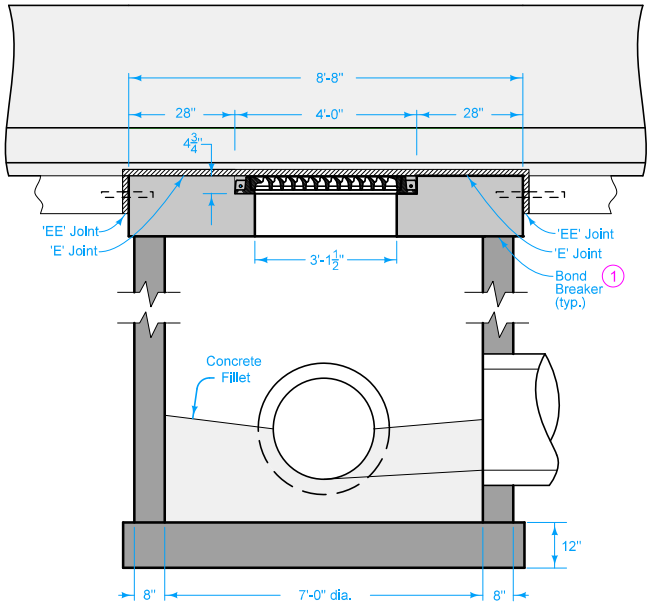

SECTION B-B (SHALLOW)

Shallow circular intake
H = 3'-0" to 15'-0"
7' barrel diameter

Deep circular option:
H = 15'-0" to 28'-0"
4' and 7' barrel diameters

Possible Contract Item:
Barrier Intake, SW-548

Possible Tabulation:
104-5B

IOWA DOT

STANDARD ROAD PLAN

REVISION	
6	10-16-18

SW-548

SHEET 1 of 6

REVISIONS: Changed the 'Form Grade Location' on Sheet 2 and removed the "Form Grade Location' call out on Sheet 3 to be consistent with Sheet 1.

APPROVED BY DESIGN METHODS ENGINEER

SINGLE-GRATE BARRIER INTAKE, CIRCULAR

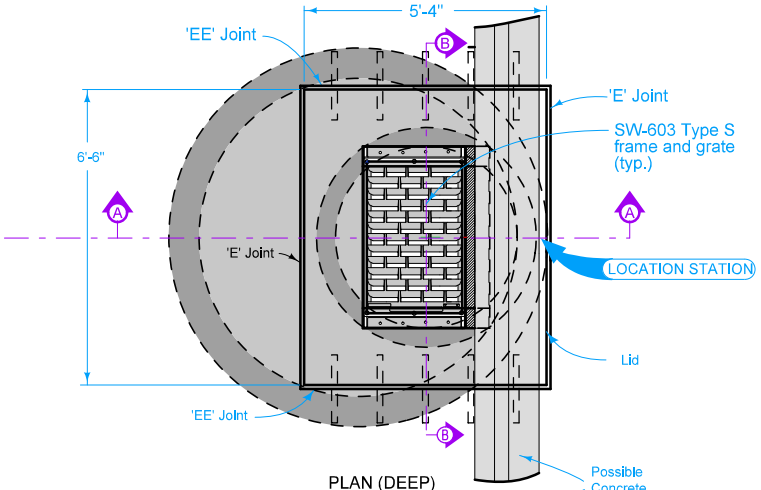

PLAN (DEEP)

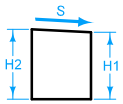

DETAIL 'B'

Dimensions		
"S" (%)	"H1" (In.)	"H2" (In.)
1	16.33	16.59
2	16.67	16.98
3	17.00	17.47
4	17.33	17.96
5	17.67	18.45
6	18.00	18.94

(1) Trowel smooth and place two layers of 30-pound roofing felt to prevent bond.

(2) Match slope of top and grate to adjacent pavement.

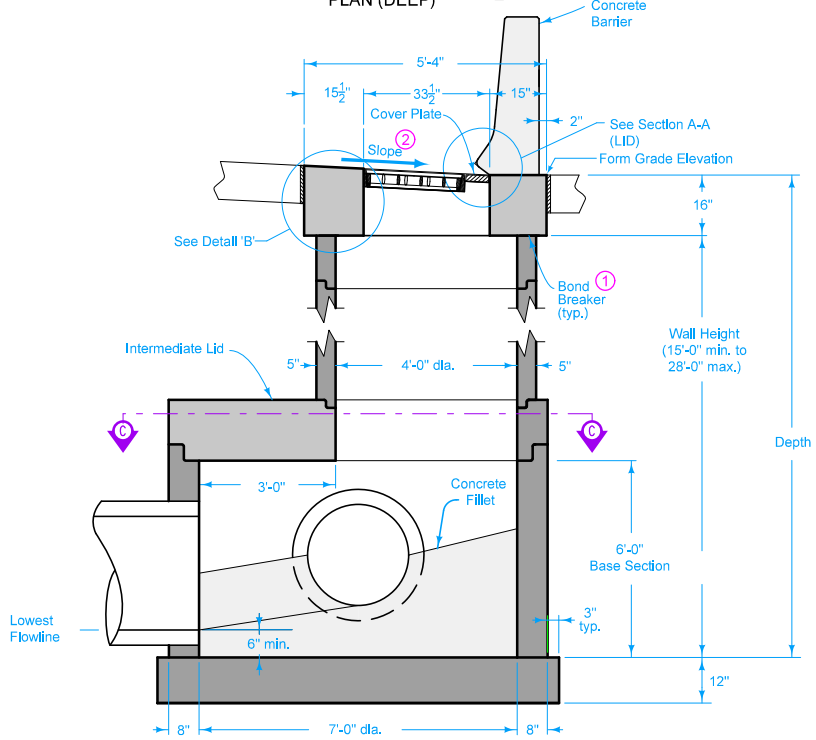

SECTION A-A (DEEP)

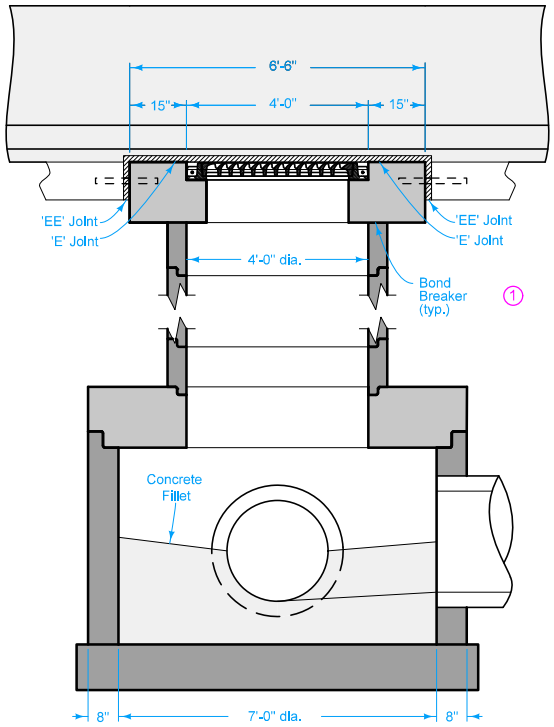

SECTION B-B (DEEP)

IOWA DOT

STANDARD ROAD PLAN

REVISION	
6	10-16-18

SW-548

SHEET 2 of 6

REVISIONS: Changed the 'Form Grade Location' on Sheet 2 and removed the "Form Grade Location' call out on Sheet 3 to be consistent with Sheet 1.

APPROVED BY DESIGN METHODS ENGINEER

SINGLE-GRATE BARRIER INTAKE, CIRCULAR

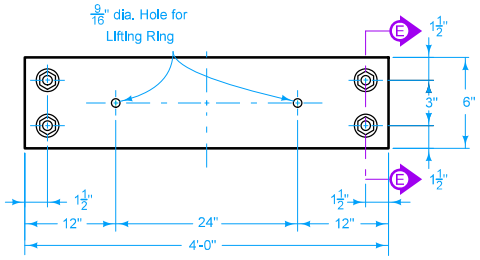

PLAN

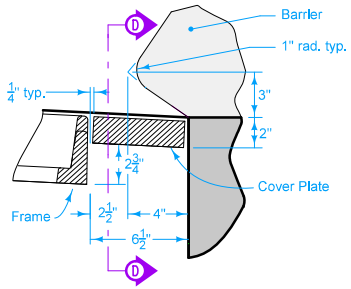

SECTION A-A
(LID)

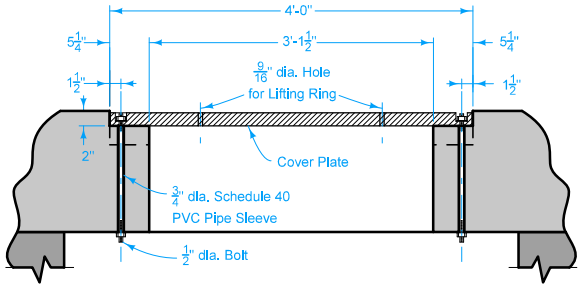

SECTION D-D

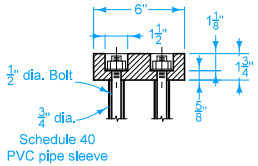

SECTION E-E

COVER PLATE

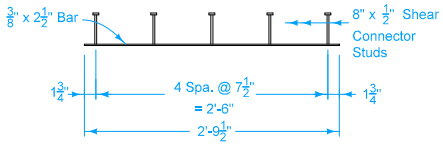

FRAME RING
(2 required)

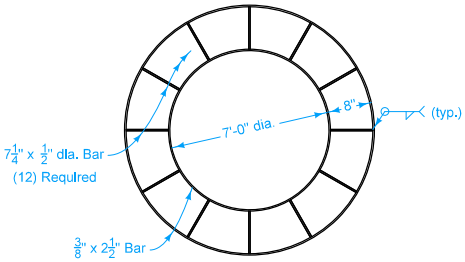

WALL (SHALLOW)

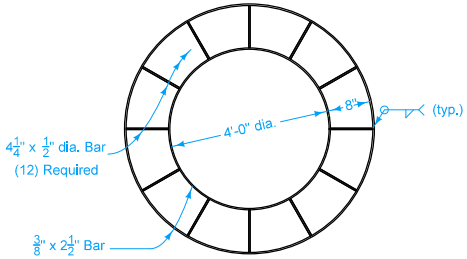

WALL (DEEP)

EDGE ARMOR

IOWA DOT

STANDARD ROAD PLAN

REVISION	
6	10-16-18

SW-548

SHEET 3 of 6

REVISIONS: Changed the 'Form Grade Location' on Sheet 2 and removed the "Form Grade Location' call out on Sheet 3 to be consistent with Sheet 1.

APPROVED BY DESIGN METHODS ENGINEER

SINGLE-GRATE BARRIER INTAKE, CIRCULAR

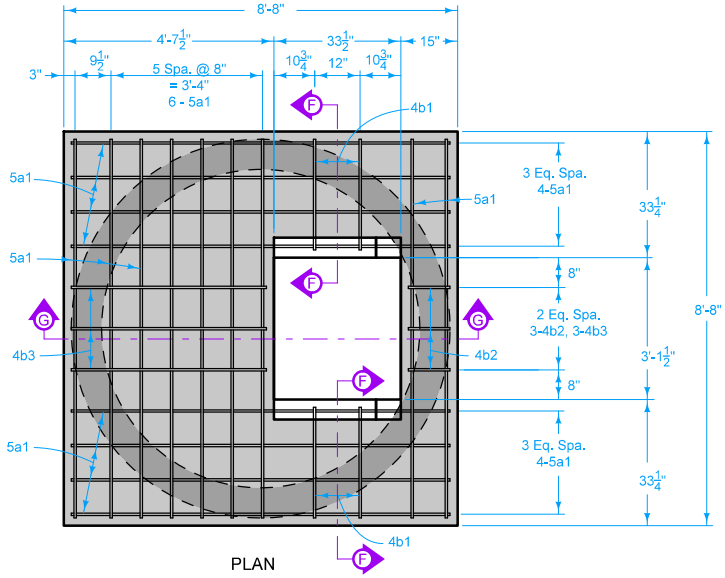

PLAN

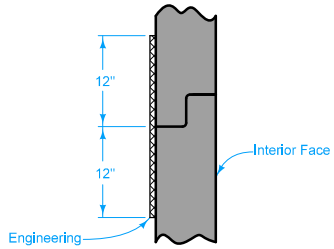

WALL JOINT DETAIL

LID REINFORCING BAR LIST					
EPOXY-COATED					
BAR	LOCATION	SHAPE	NO.	LENGTH	WEIGHT
5a1	Lid, Longitudinal & Transverse	—	34	8'-4"	296
4b1	Lid Hoop		4	6'-11"	18
4b2	Lid Hoop		3	4'-7"	9
4b3	Lid Hoop		3	11'-4"	23
EPOXY COATED REINFORCING STEEL - TOTAL					346

LID BENT BAR DETAILS

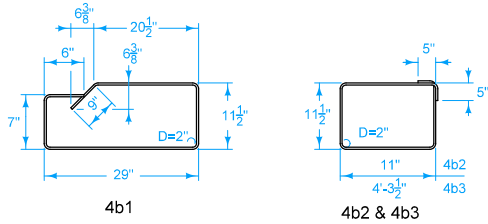

NOTE: ALL DIMENSIONS SHOWN OUT TO OUT. D = PIN DIAMETER

LID QUANTITY SUMMARY (SHALLOW)	
Concrete	3.2 CY*
Epoxy Coated Reinforcing Steel	346 LB

* Based on Minimum thickness = 16"

Maximum Pipe Diameter for Pipes at:	
90° Separation	180° Separation
36	48

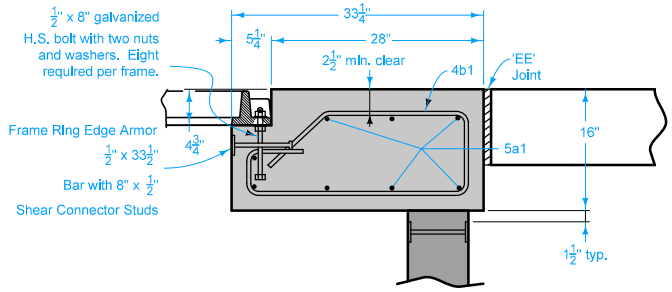

SECTION F-F

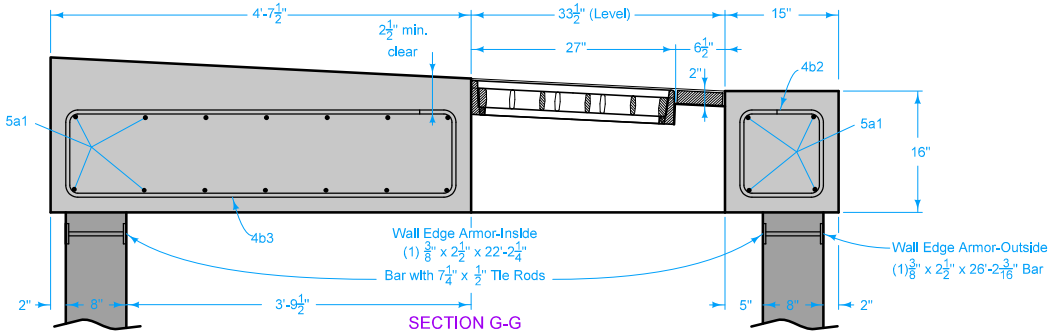

SECTION G-G

LID (SHALLOW)

IOWA DOT

STANDARD ROAD PLAN

REVISION	
6	10-16-18

SW-548

SHEET 4 of 6

REVISIONS: Changed the 'Form Grade Location' on Sheet 2 and removed the "Form Grade Location' call out on Sheet 3 to be consistent with Sheet 1.

APPROVED BY DESIGN METHODS ENGINEER

SINGLE-GRATE BARRIER INTAKE, CIRCULAR

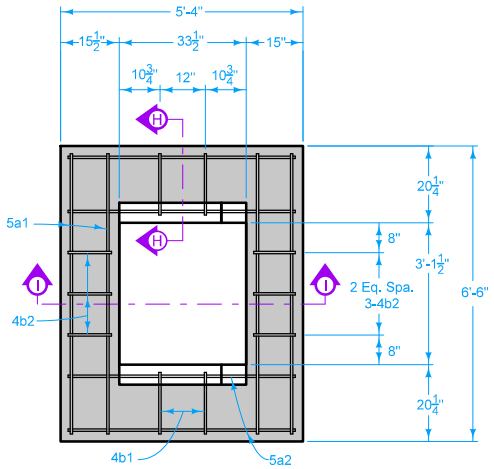

PLAN

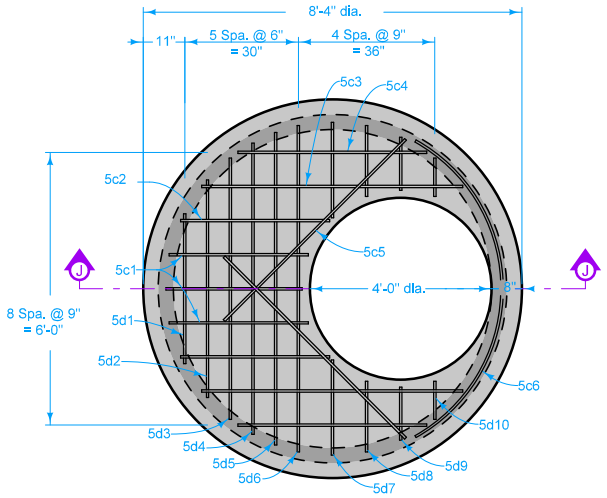

SECTION C-C
INTERMEDIATE LID

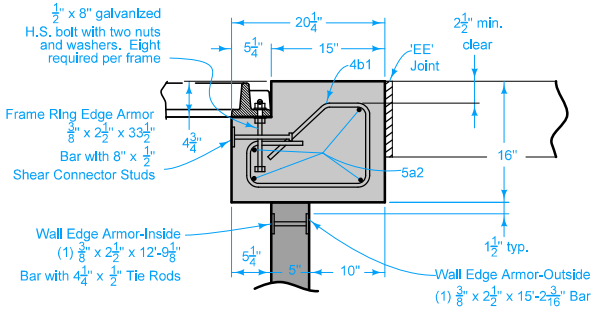

SECTION H-H

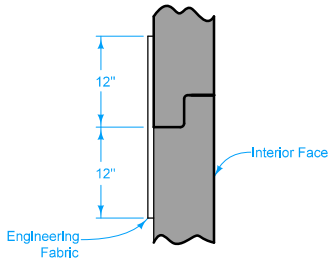

WALL JOINT DETAIL

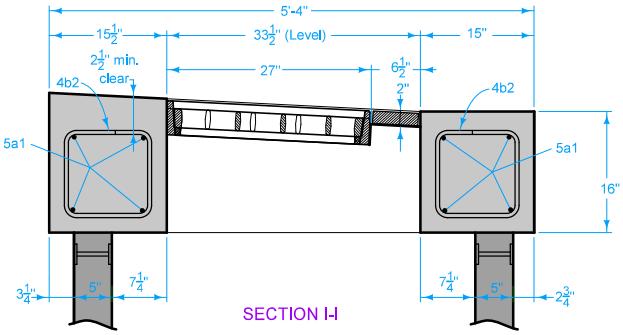

SECTION I-I

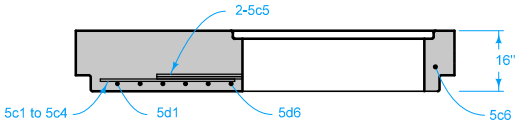

SECTION J-J

LID (DEEP)

LID REINFORCING BAR LIST

EPOXY-COATED

BAR	LOCATION	SHAPE	NO.	LENGTH	WEIGHT
5a1	Lid, Longitudinal	—	8	6'-2"	51
5a2	Lid, Transverse	—	8	5'-0"	42
4b1	Lid Hoop		4	4'-9"	13
4b2	Lid Hoop		6	4'-7"	18
5c1	Intermediate Lid	—	3	3'-0"	9
5c2	Intermediate Lid	—	2	3'-3"	7
5c3	Intermediate Lid	—	2	5'-9"	12
5c4	Intermediate Lid	—	2	4'-2"	9
5c5	Intermediate Lid	—	2	5'-8"	12
5c6	Intermediate Lid	⌒	1	8'-2"	9
5d1	Intermediate Lid	—	1	3'-5"	4
5d2	Intermediate Lid	—	1	4'-10"	5
5d3	Intermediate Lid	—	1	5'-9"	6
5d4	Intermediate Lid	—	1	6'-5"	7
5d5	Intermediate Lid	—	1	6'-10"	7
5d6	Intermediate Lid	—	1	7'-2"	7
5d7	Intermediate Lid	—	2	2'-1"	4
5d8	Intermediate Lid	—	2	1'-6"	3
5d9	Intermediate Lid	—	2	1'-2"	2
5d10	Intermediate Lid	—	2	0'-11"	2
	EPOXY COATED REINFORCING STEEL - TOTAL				229

LID BENT BAR DETAILS

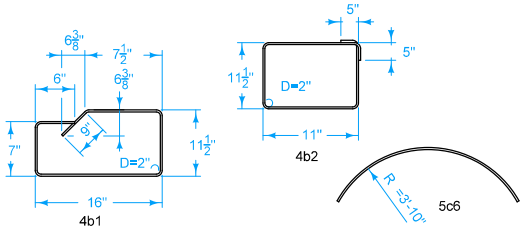

NOTE: ALL DIMENSIONS SHOWN OUT TO OUT. D=PIN DIAMETER

LID QUANTITY SUMMARY
(DEEP)

Concrete - Lid	1.2 CY
Concrete - Intermediate Lid	2.1 CY
Epoxy Coated Reinforcing Steel	229 LB

IOWA DOT

STANDARD ROAD PLAN

REVISION
6 10-16-18

SW-548

SHEET 5 of 6

REVISIONS: Changed the 'Form Grade Location' on Sheet 2 and removed the "Form Grade Location' call out on Sheet 3 to be consistent with Sheet 1.

APPROVED BY DESIGN METHODS ENGINEER

SINGLE-GRATE BARRIER INTAKE, CIRCULAR

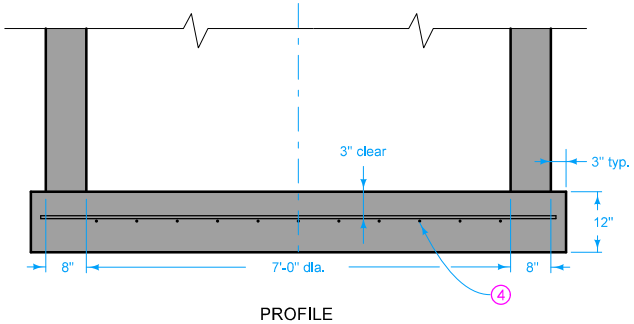

PROFILE

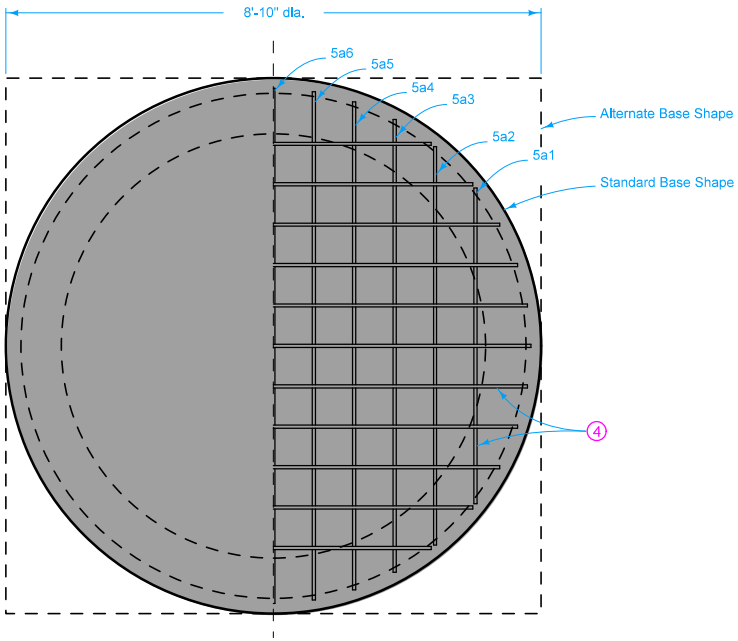

PLAN

BASE

BASE REINFORCING BAR LIST					
EPOXY-COATED					
BAR	LOCATION	SHAPE	NO.	LENGTH	WEIGHT
5a1	Base, Longit. & Transverse	——	4	5'-3"	22
5a2	Base, Longit. & Transverse	——	4	6'-7"	27
5a3	Base, Longit. & Transverse	——	4	7'-6"	31
5a4	Base, Longit. & Transverse	——	4	8'-0"	33
5a5	Base, Longit. & Transverse	——	4	8'-4"	35
5a6	Base, Longit. & Transverse	——	2	8'-6"	18
EPOXY COATED REINFORCING STEEL - TOTAL					166

BASE QUANTITY SUMMARY	
Concrete	2.3 CY *
Epoxy Coated Reinforcing Steel	166 LB *

* Based on Standard Base Shape

4 #5 at 8 inch centers each direction or equivalent welded wire fabric.

5 4el bar length to be pipe diameter plus 12 inches. Place 4el bar inside of vertical reinforcing. Shift main reinforcing bars as required for pipe entrance. Filed cut bars to maintin 3 inch clearance from bottom. Maintain 2 inch clearance from face of walls. Four 4el bars required per pipe entrance.

IOWA DOT

STANDARD ROAD PLAN

REVISION	
6	10-16-18

SW-548

SHEET 6 of 6

REVISIONS: Changed the 'Form Grade Location' on Sheet 2 and removed the "Form Grade Location' call out on Sheet 3 to be consistent with Sheet 1.

APPROVED BY DESIGN METHODS ENGINEER

SINGLE-GRATE BARRIER INTAKE, CIRCULAR

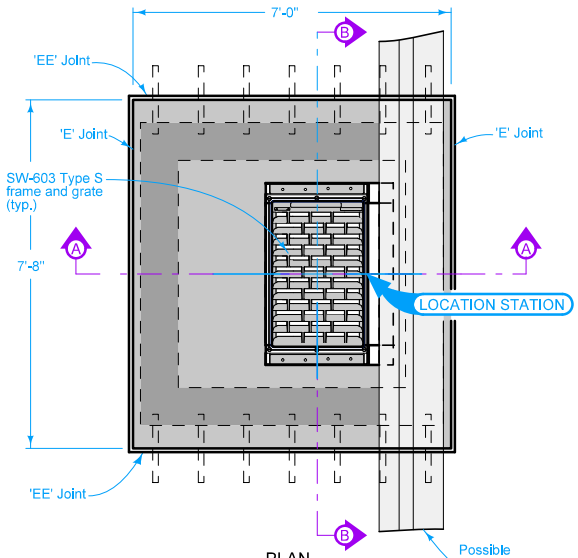

PLAN

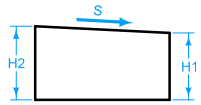

DETAIL 'A'

Dimensions		
"S" (%)	"H1" (In.)	"H2" (In.)
1	16.33	16.69
2	16.67	17.38
3	17.00	18.07
4	17.33	18.76
5	17.67	19.45
6	18.00	20.14

Cover plate and edge armor steel to be ASTM A 36, galvanized after fabrication.

Remove cover plate before constructing concrete barrier.

Cast frames into intake top so tops of grates are $\frac{1}{4}$" below Form Grade Elevation. Bolt intake frames together on both sides with four $\frac{1}{2}$" x 4" bolts.

For joint details, refer to PV-101.

Maximum pipe diameter is 48 inches.

1. Trowel smooth and place two layers of 30 pound roofing felt to prevent bond.
2. Match slope of top and grade to slope of adjacent pavement.
3. 12 inch minimum wall height above all pipes.

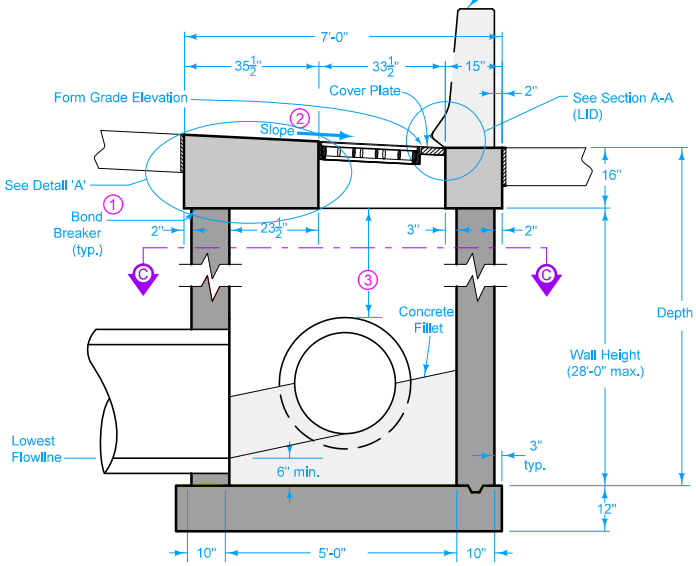

SECTION A-A

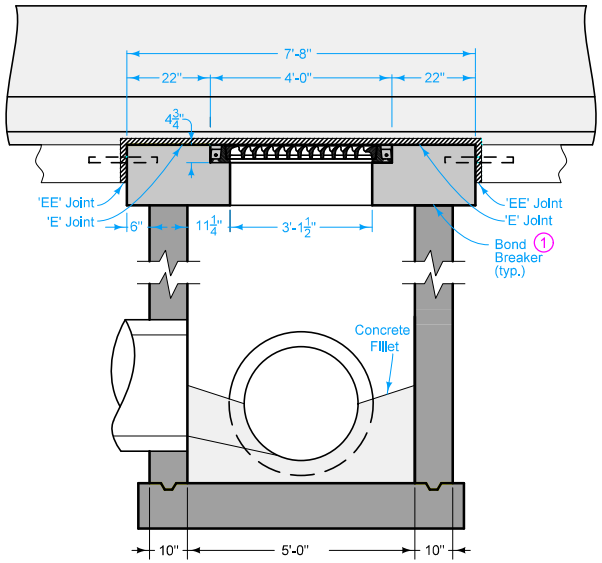

SECTION B-B

Possible Contract Item:

Barrier Intake, SW-549

Possible Tabulation:

104-5B

IOWA DOT

STANDARD ROAD PLAN

REVISION	
5	04-17-18

SW-549

SHEET 1 of 5

REVISIONS: Changed 'Invert' callout to 'Concrete Fillet'. Added maximum pipe diameter.

Brian Smith
APPROVED BY DESIGN METHODS ENGINEER

SINGLE-GRATE BARRIER INTAKE, RECTANGULAR

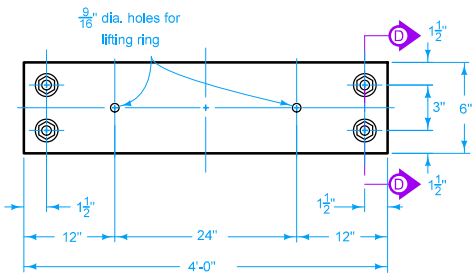

PLAN

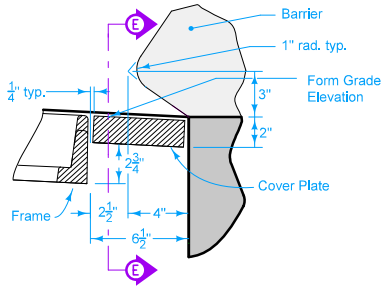

SECTION A-A
(LID)

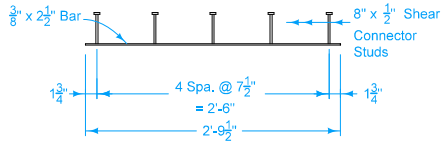

FRAME RING
(2 required)

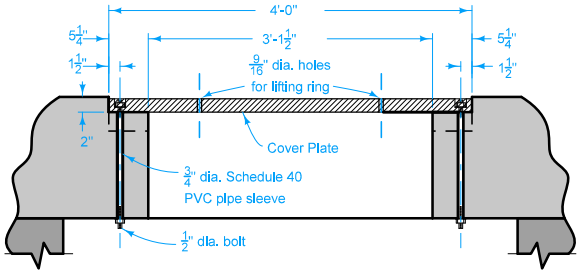

SECTION E-E

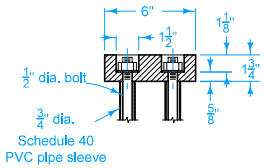

SECTION D-D

COVER PLATE

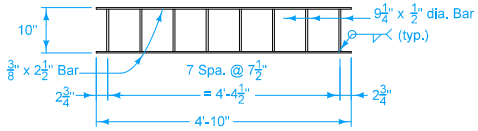

WALL
(4 required)

EDGE ARMOR

IOWA DOT

STANDARD ROAD PLAN

REVISION	
5	04-17-18

SW-549

SHEET 2 of 5

REVISIONS: Changed 'Invert' callout to 'Concrete Fillet'. Added maximum pipe diameter.

Brian Smith
APPROVED BY DESIGN METHODS ENGINEER

SINGLE-GRATE BARRIER INTAKE, RECTANGULAR

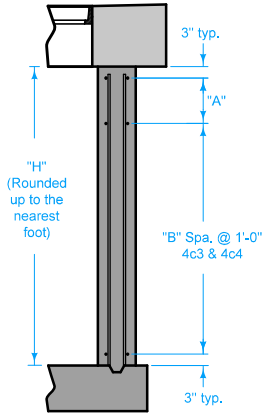

PART SECTION A-A
(Where H = 3' to 14')

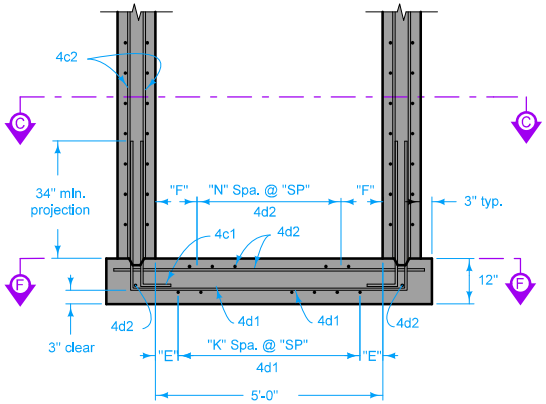

SECTION A-A

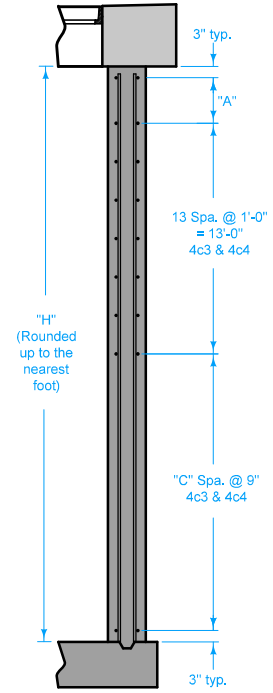

PART SECTION A-A
(Where H = 15' to 28')

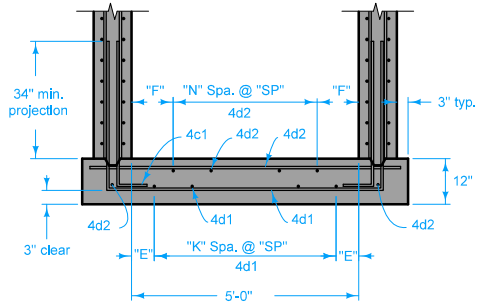

SECTION B-B

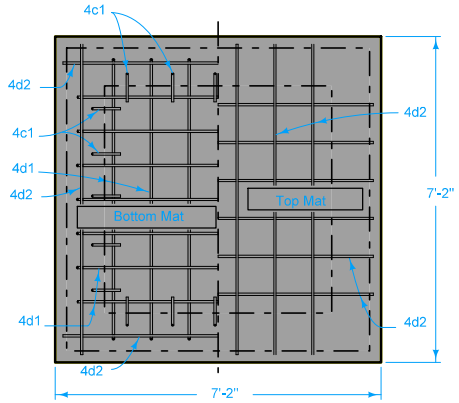

SECTION F-F
BASE REINFORCING

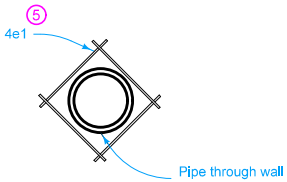

PIPE OPENINGS

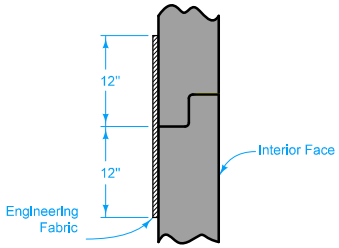

WALL JOINT DETAIL

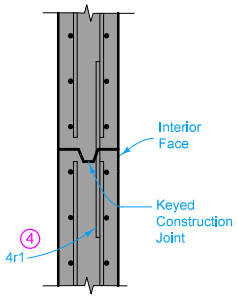

C.I.P. WALL
CONSTRUCTION JOINT

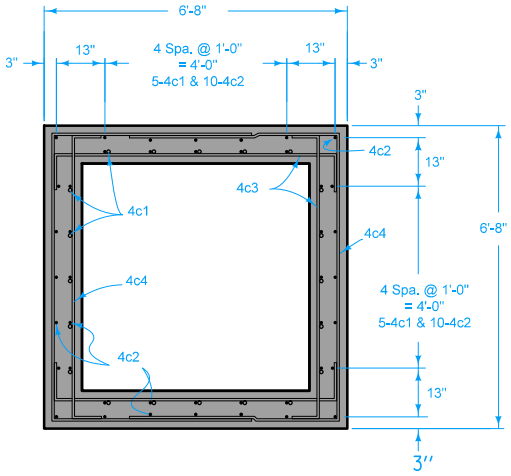

SECTION C-C

4 Install 4r1 x 3'-0" dowel bars at 12-inch spacing at all wall joints. Twenty-four 4rl bars required per joint, total weight = 48 lbs.

5 4e1 bar length to be pipe diameter plus 12 inches. Place 4e1 bar inside of vertical reinforcing. Shift main reinforcing bars as required for pipe entrance. Field cut bars to maintain 3 inch clearance from bottom and 2 inch clearance from face of walls. Four 4e1 bars required per pipe entrance.

IOWA DOT

STANDARD ROAD PLAN

REVISION	
5	04-17-18

SW-549

SHEET 3 of 5

REVISIONS: Changed 'Invert' callout to 'Concrete Fillet'. Added maximum pipe diameter.

Brian Smith
APPROVED BY DESIGN METHODS ENGINEER

SINGLE-GRATE BARRIER INTAKE, RECTANGULAR

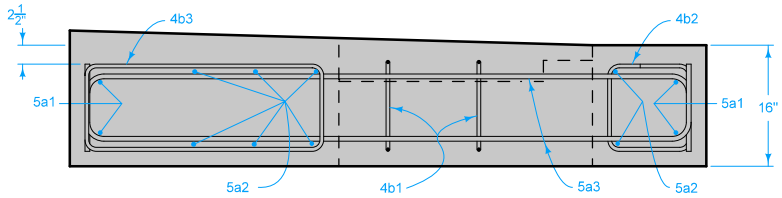

SECTION G-G

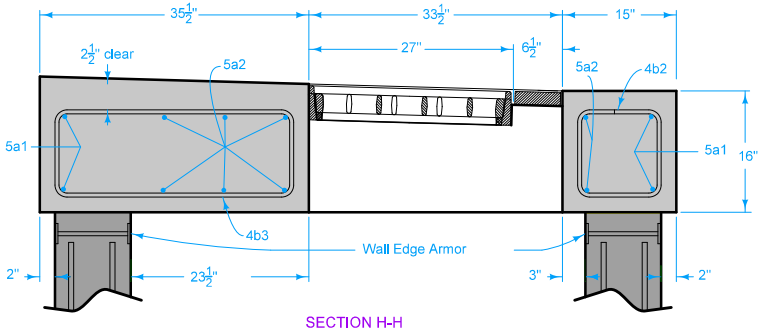

SECTION H-H

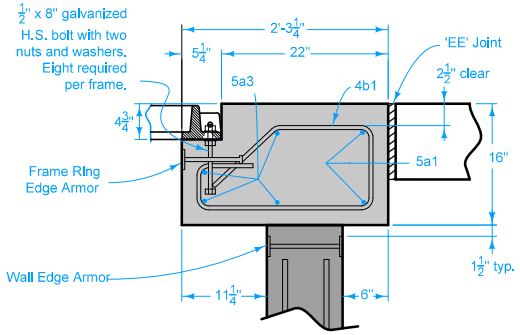

SECTION J-J

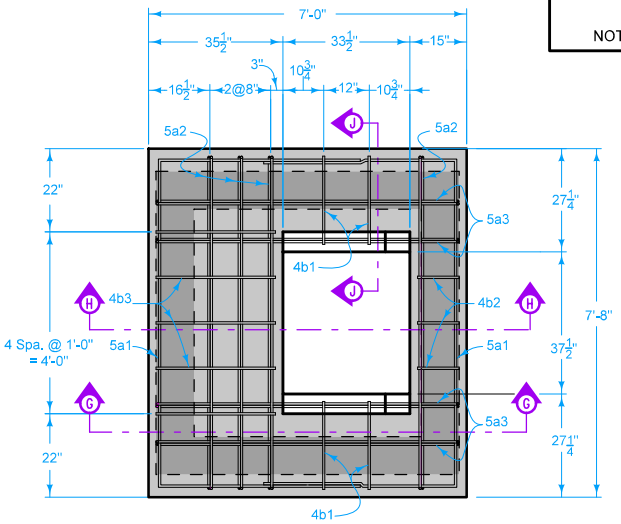

LID PLAN

LID REINFORCING BAR LIST					
EPOXY-COATED					
BAR	LOCATION	SHAPE	NO.	LENGTH	WEIGHT (lb.)
5a1	Lid, Exterior, Edge		4	16'-5	68
5a2	Lid, Interior, Longitudinal		8	9'-0	75
5a3	Lid, Interior, Transverse		8	8'-4	70
4b1	Lid Hoop		4	5'-11	16
4b2	Lid Hoop		3	4'-7	9
4b3	Lid Hoop		5	8'-0	27
EPOXY COATED REINFORCING STEEL - TOTAL					265

LID BENT BAR DETAILS

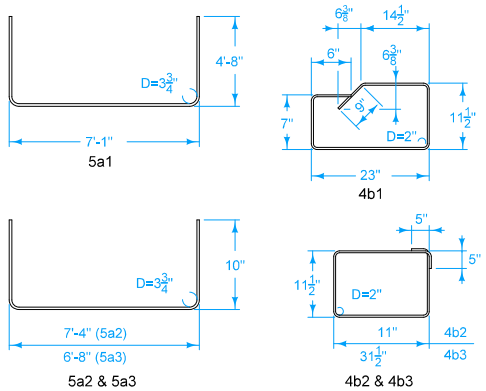

NOTE: ALL DIMENSIONS SHOWN OUT TO OUT. D = PIN DIAMETER

IOWA DOT

STANDARD ROAD PLAN

REVISION	
5	04-17-18

SW-549

SHEET 4 of 5

REVISIONS: Changed 'Invert' callout to 'Concrete Fillet'. Added maximum pipe diameter.

Brian Smith
APPROVED BY DESIGN METHODS ENGINEER

SINGLE-GRATE BARRIER INTAKE, RECTANGULAR

LID

VARIABLE DIMENSIONS AND QUANTITIES

Dimensions				Bar List																				Quantities				
	(6)			4c1		4c2		4c3 (7)				4c4 (7)				4d1				4d2				Concrete - Cu. Yds.				Steel (8)
"H" (Ft.)	"A" (In.)	"E" (In.)	"F" (In.)	NO.	L	NO.	L	No. of Spaces "B"	No. of Spaces "C"	NO.	L	No. of Spaces "B"	No. of Spaces "C"	NO.	L	SP	"K"	NO.	L	SP	"N"	NO.	L	BASE	LID	WALLS	TOTAL	TOTAL LBS.
3	6	3"	7½"	20	4'-3"	–	–	2	–	16	7'-8"	2	--	8	15'-0"	9"	6	14	13'-5"	9"	5	16	6'-10"	1.9	2.2	2.2	6.3	682
4	6	3"	7½"	20	4'-3"	44	3'-10"	3	–	20	7'-8"	3	--	10	15'-0"	9"	6	14	13'-5"	9"	5	16	6'-10"	1.9	2.2	2.9	7.0	835
5	6	3"	7½"	20	4'-3"	44	4'-10"	4	–	24	7'-8"	4	--	12	15'-0"	9"	6	14	13'-5"	9"	5	16	6'-10"	1.9	2.2	3.6	7.7	905
6	6	3"	7½"	20	4'-3"	44	5'-10"	5	–	28	7'-8"	5	--	14	15'-0"	9"	6	14	13'-5"	9"	5	16	6'-10"	1.9	2.2	4.3	8.4	974
7	6	3"	7½"	20	4'-3"	44	6'-10"	6	–	32	7'-8"	6	--	16	15'-0"	9"	6	14	13'-5"	9"	5	16	6'-10"	1.9	2.2	5.0	9.1	1,045
8	6	3"	7½"	20	4'-3"	44	7'-10"	7	–	36	7'-8"	7	--	18	15'-0"	9"	6	14	13'-5"	9"	5	16	6'-10"	1.9	2.2	5.8	9.9	1,114
9	6	3"	7½"	20	4'-3"	44	8'-10"	8	–	40	7'-8"	8	--	20	15'-0"	9"	6	14	13'-5"	9"	5	16	6'-10"	1.9	2.2	6.5	10.6	1,185
10	6	3"	7½"	20	4'-3"	44	9'-10"	9	–	44	7'-8"	9	--	22	15'-0"	9"	6	14	13'-5"	9"	5	16	6'-10"	1.9	2.2	7.2	11.3	1,254
11	6	2"	6"	20	4'-3"	44	10'-10"	10	–	48	7'-8"	10	--	24	15'-0"	8"	7	16	13'-5"	8"	6	18	6'-10"	1.9	2.2	7.9	12.0	1,351
12	6	2"	6"	20	4'-3"	44	11'-10"	11	–	52	7'-8"	11	--	26	15'-0"	8"	7	16	13'-5"	8"	6	18	6'-10"	1.9	2.2	8.6	12.7	1,422
13	6	2"	6"	20	4'-3"	44	12'-10"	12	–	56	7'-8"	12	--	28	15'-0"	8"	7	16	13'-5"	8"	6	18	6'-10"	1.9	2.2	9.4	13.5	1,492
14	6	2"	6"	20	4'-3"	44	13'-10"	13	–	60	7'-8"	13	--	30	15'-0"	8"	7	16	13'-5"	8"	6	18	6'-10"	1.9	2.2	10.1	14.2	1,562
15	9	2"	6"	20	4'-3"	44	14'-10"	13	1	64	7'-8"	13	1	32	15'-0"	8"	7	16	13'-5"	8"	6	18	6'-10"	1.9	2.2	10.8	14.9	1,632
16	12	2"	6"	20	4'-3"	44	15'-10"	13	2	68	7'-8"	13	2	34	15'-0"	8"	7	16	13'-5"	8"	6	18	6'-10"	1.9	2.2	11.5	15.6	1,701
17	6	2"	6"	20	4'-3"	44	16'-10"	13	4	76	7'-8"	13	4	38	15'-0"	8"	7	16	13'-5"	8"	6	18	6'-10"	1.9	2.2	12.2	16.3	1,812
18	9	2"	6"	20	4'-3"	44	17'-10"	13	5	80	7'-8"	13	5	40	15'-0"	8"	7	16	13'-5"	8"	6	18	6'-10"	1.9	2.2	13.0	17.1	1,882
19	12	2"	6"	20	4'-3"	44	18'-10"	13	6	84	7'-8"	13	6	42	15'-0"	8"	7	16	13'-5"	8"	6	18	6'-10"	1.9	2.2	13.7	17.8	1,952
20	6	2"	6"	20	4'-3"	44	19'-10"	13	8	92	7'-8"	13	8	46	15'-0"	8"	7	16	13'-5"	8"	6	18	6'-10"	1.9	2.2	14.4	18.5	2,062
21	9	2"	6"	20	4'-3"	44	20'-10"	13	9	96	7'-8"	13	9	48	15'-0"	8"	7	16	13'-5"	8"	6	18	6'-10"	1.9	2.2	15.1	19.2	2,132
22	12	2"	6"	20	4'-3"	44	21'-10"	13	10	100	7'-8"	13	10	50	15'-0"	8"	7	16	13'-5"	8"	6	18	6'-10"	1.9	2.2	15.8	19.9	2,202
23	6	2"	6"	20	4'-3"	44	22'-10"	13	12	108	7'-8"	13	12	54	15'-0"	8"	7	16	13'-5"	8"	6	18	6'-10"	1.9	2.2	16.6	20.7	2,312
24	9	2"	5½"	20	4'-3"	44	23'-10"	13	13	112	7'-8"	13	13	56	15'-0"	7"	8	18	13'-5"	7"	7	20	6'-10"	1.9	2.2	17.3	21.4	2,410
25	12	2"	5½"	20	4'-3"	44	24'-10"	13	14	116	7'-8"	13	14	58	15'-0"	7"	8	18	13'-5"	7"	7	20	6'-10"	1.9	2.2	18.0	22.1	2,479
26	6	2"	5½"	20	4'-3"	44	25'-10"	13	16	124	7'-8"	13	16	62	15'-0"	7"	8	18	13'-5"	7"	7	20	6'-10"	1.9	2.2	18.7	22.8	2,589
27	9	2"	5½"	20	4'-3"	44	26'-10"	13	17	128	7'-8"	13	17	64	15'-0"	7"	8	18	13'-5"	7"	7	20	6'-10"	1.9	2.2	19.4	23.5	2,660
28	12	2"	5½"	20	4'-3"	44	27'-10"	13	18	132	7'-8"	13	18	66	15'-0"	7"	8	18	13'-5"	7"	7	20	6'-10"	1.9	2.2	20.2	24.3	2,729

BENT BAR DETAILS

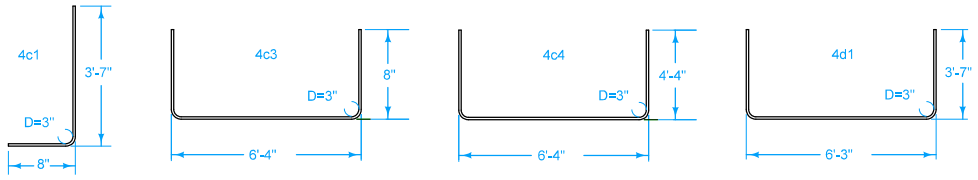

NOTE: ALL DIMENSIONS SHOWN OUT TO OUT. D = PIN DIAMETER

(6) A = First bar spacing at top of wall. Minimum spacing is 3 inches. Maximum spacing is 12 inches. Adjust as necessary.

(7) See Section A-A on sheet 2 for spacing.

(8) Quantity includes 265 lbs. for lid.

IOWA DOT

STANDARD ROAD PLAN

REVISION 5 04-17-18

SW-549

SHEET 5 of 5

REVISIONS: Changed 'Invert' callout to 'Concrete Fillet'. Added maximum pipe diameter.

Brian Smith
APPROVED BY DESIGN METHODS ENGINEER

SINGLE-GRATE BARRIER INTAKE, RECTANGULAR

REINFORCEMENT

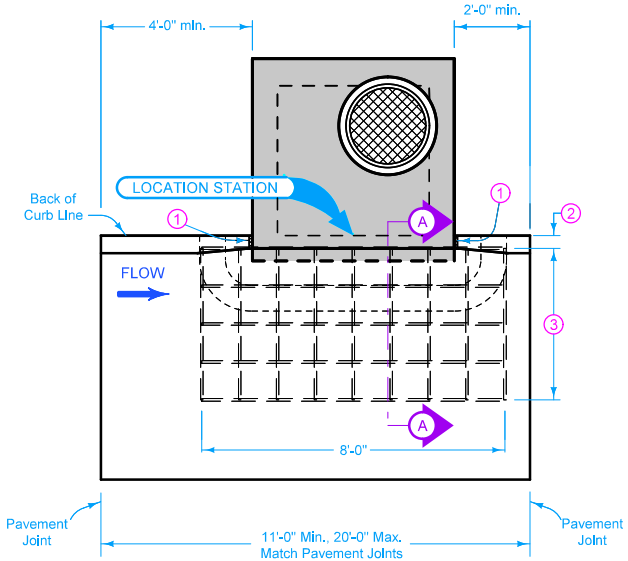

PLAN FOR SW-508

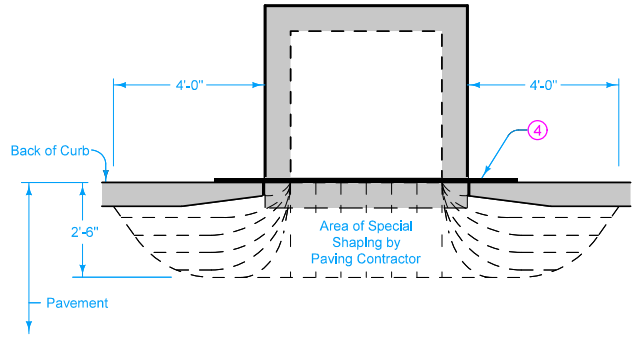

PLAN FOR SPECIAL SHAPING of INTAKE THROAT

This alternate method eliminates the need for boxouts at intakes. It requires the Contractor to pave through the insert area and special shape the pavement to drain into the intake. Include special shaping and reinforcement of insert area with price bid for P.C. Concrete Pavement. The intake well must be in place and the paver supported as it crosses over the intake well.

1. Use a 2 inch thick resilient joint filler between the curb and intake top.
2. 4" for 6 inch standard curb. 8" for 4 inch sloped curb.
3. 4'-0" for 6 inch standard curb. 3'-8" for 4 inch sloped curb.
4. Form used as a guide for shaping.

REINFORCING BAR LIST						
Type	Size	No. of Bars	6" Standard Curb		4" Sloped Curb	
			Length	WT. (lbs.)	Length	WT. (lbs.)
SW-508	4	14	76'-0"	51	73'-0"	49
SW-510	4	18	112'-0"	75	107'-8"	72

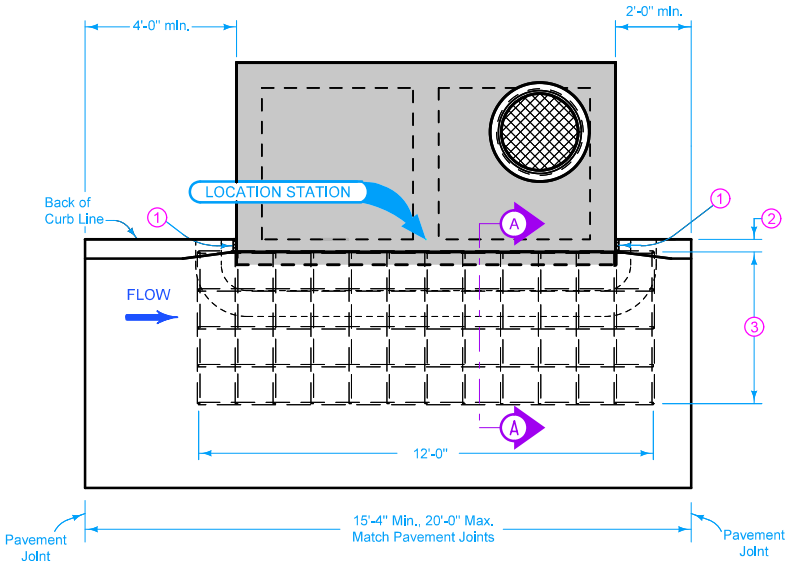

PLAN FOR SW-510

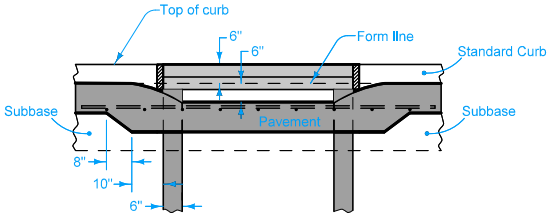

ELEVATION FOR SPECIAL SHAPING of INTAKE THROAT

IOWA DOT

STANDARD ROAD PLAN

REVISION 2 04-17-18

SW-550

SHEET 1 of 2

REVISIONS: Added details for 4 Inch sloped curb. Modified circle notes.

Brian Smith
APPROVED BY DESIGN METHODS ENGINEER

ALTERNATE CONSTRUCTION METHOD (SW-508 AND SW-510 INTAKE)

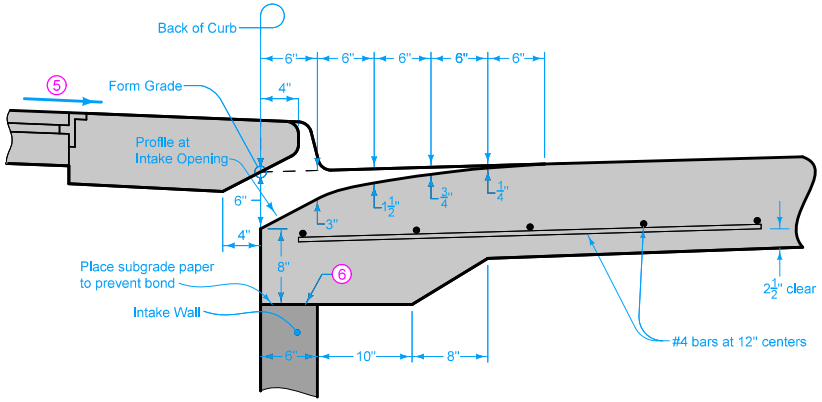

SECTION A-A
(Insert Area for 6 Inch Standard Curb)

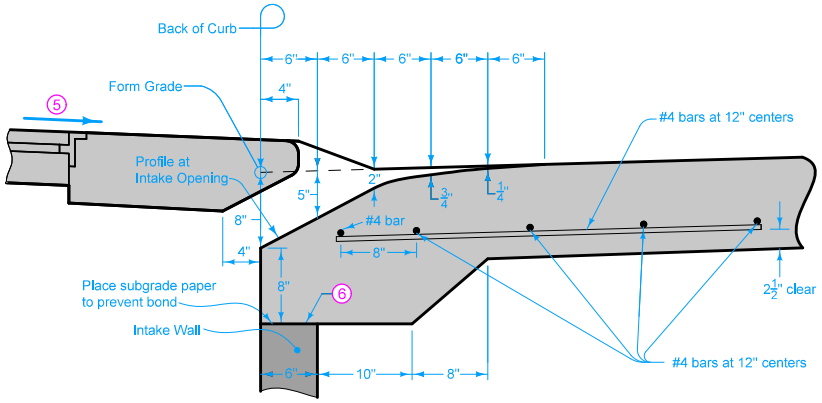

SECTION A-A
(Insert Area for 4 Inch Sloped Curb)

5 Slope of 1.5% or as specified in the contract documents.

6 Pavement shall rest on front wall of intake a minimum of 4 inches.

IOWA DOT

STANDARD ROAD PLAN

REVISION	
2	04-17-18

SW-550

SHEET 2 of 2

REVISIONS: Added details for 4 Inch sloped curb. Modified circle notes.

Brian Smith
APPROVED BY DESIGN METHODS ENGINEER

ALTERNATE CONSTRUCTION METHOD (SW-508 AND SW-510 INTAKE)

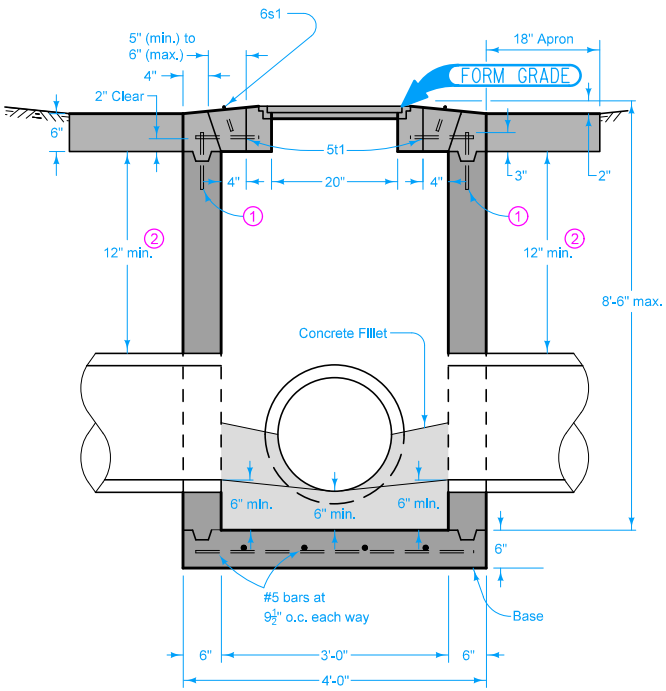

TYPICAL SECTION

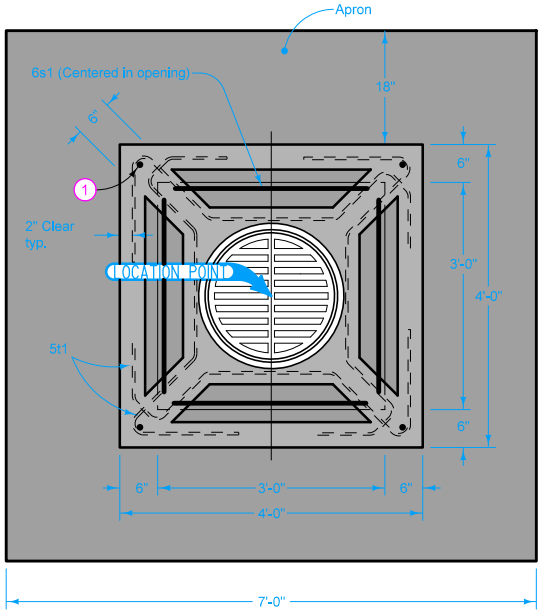

PLAN

Top of intake may be poured in the field or precast. For precast units, place a 1 inch diameter X 3 inch deep alignment hole 3 inches from each side of the corners of the unit.

Maximum pipe size 18 inches.

1. Four #6 X 9 inch alignment pins (precast tops only).
2. 12 inch minimum wall height above all pipes.

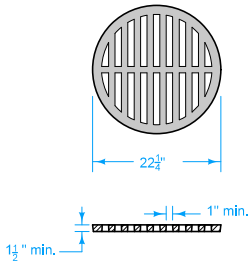

GRATE

Minimum Weight = 86 lbs.

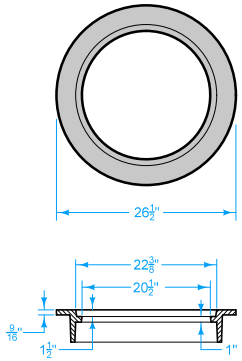

FRAME

Minimum Weight = 81 lbs.

BENT BAR DETAILS

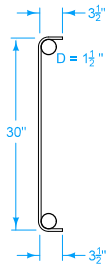

6s1
(4 bars required)

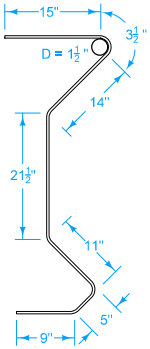

5t1
(4 bars required)

NOTE: ALL DIMENSIONS SHOWN OUT TO OUT.
D = PIN DIAMETER

IOWA DOT

STANDARD ROAD PLAN

REVISION	
3	04-17-18

SW-562

SHEET 1 of 1

REVISIONS: Changed the title. Added a Concrete Fillet. Added maximum pipe size.

Brian Smith
APPROVED BY DESIGN METHODS ENGINEER

VERTICAL THROAT AREA INTAKE (SMALL BOX)

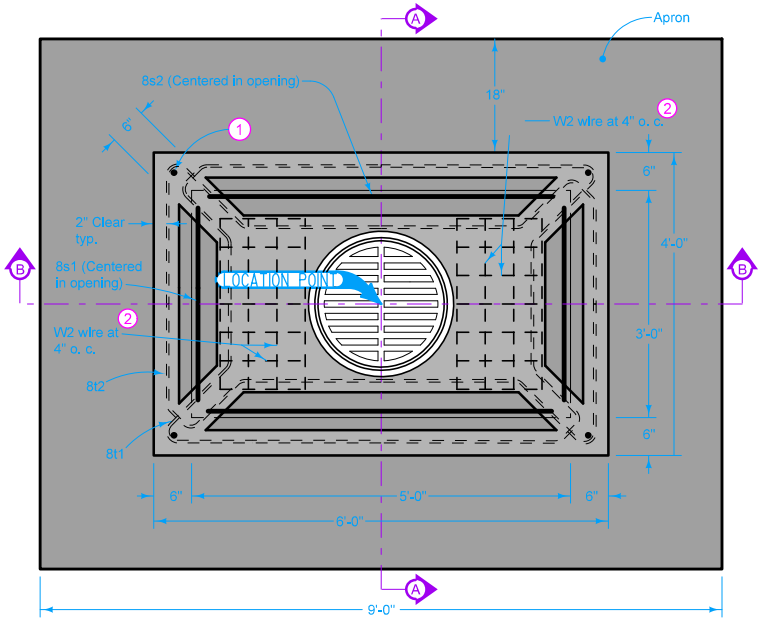

PLAN

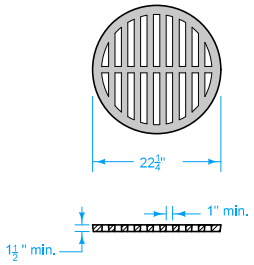

GRATE

Minimum Weight = 86 lbs.

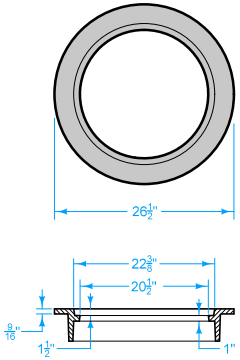

FRAME

Minimum Weight = 81 lbs.

BENT BAR DETAILS

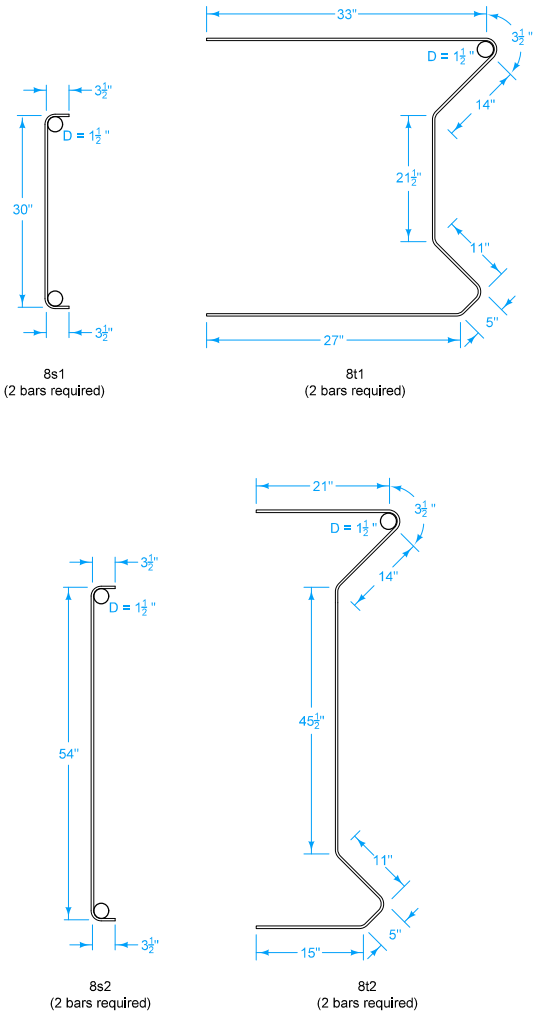

NOTE: ALL DIMENSIONS SHOWN OUT TO OUT.
D = PIN DIAMETER

Top of intake may be poured in the field or precast. For precast units, place a 1 inch diameter X 3 inch deep alignment hole 3 inches from each side of the corners of the unit.

1. Four #6 X 9 inch alignment pins (precast tops only).
2. Meet the requirements of Article 4151.04 of the Standard Specifications.

IOWA DOT

STANDARD ROAD PLAN

REVISION	
New	04-17-18

SW-563

SHEET 1 of 2

REVISIONS: New.

Brian Smith
APPROVED BY DESIGN METHODS ENGINEER

VERTICAL THROAT AREA INTAKE (LARGE BOX)

Short wall maximum pipe size 18 inches. Long wall maximum pipe size 36 inches.

1. Four #6 X 9 inch alignment pins (precast tops only).
2. Meet the requirements of Article 4151.04 of the Standard Specifications.
3. 12 inch minimum wall height above all pipes.

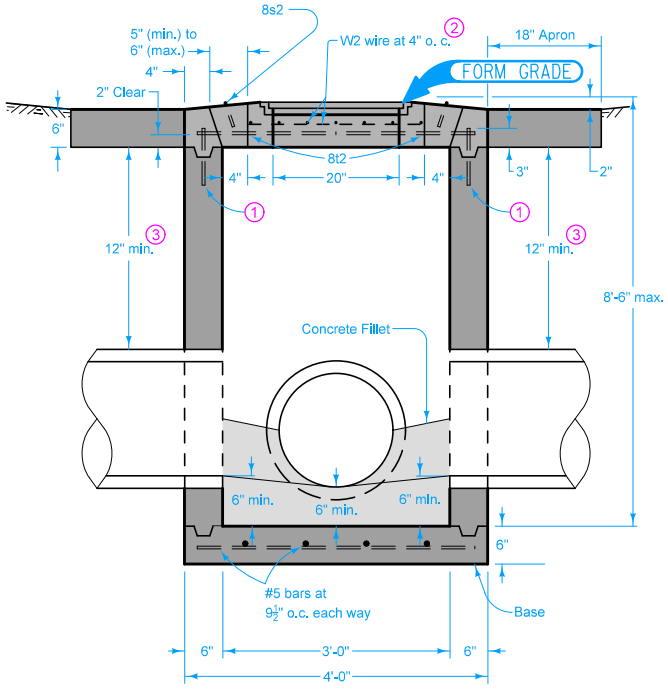

SECTION A-A
(Short Wall)

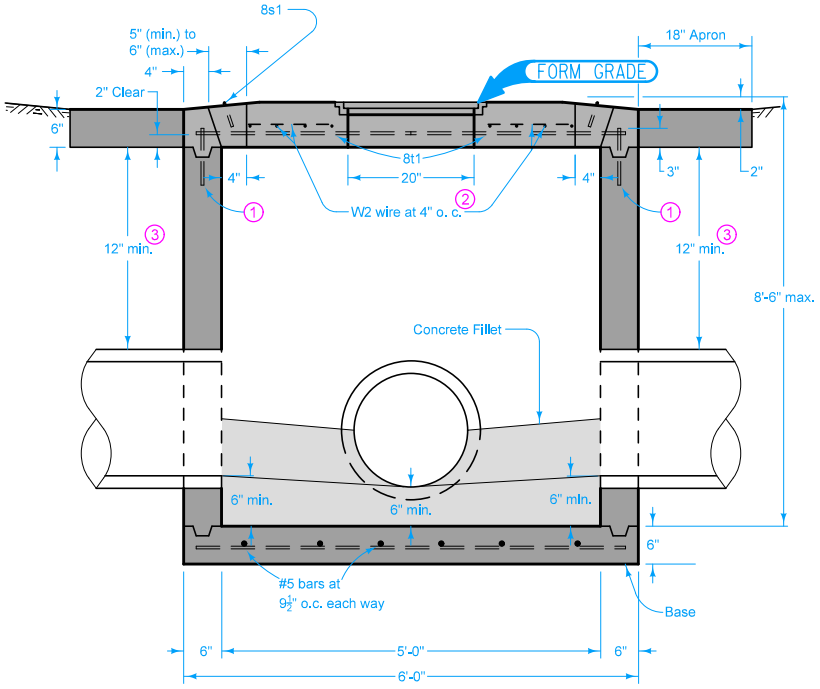

SECTION B-B
(Long Wall)

IOWA DOT

STANDARD ROAD PLAN

REVISION	
New	04-17-18

SW-563

SHEET 2 of 2

REVISIONS: New.

Brian Smith
APPROVED BY DESIGN METHODS ENGINEER

VERTICAL THROAT AREA INTAKE
(LARGE BOX)

TYPE A

Two-piece fixed casting

TYPE C

Two-piece fixed casting with bolt-down cover (2)

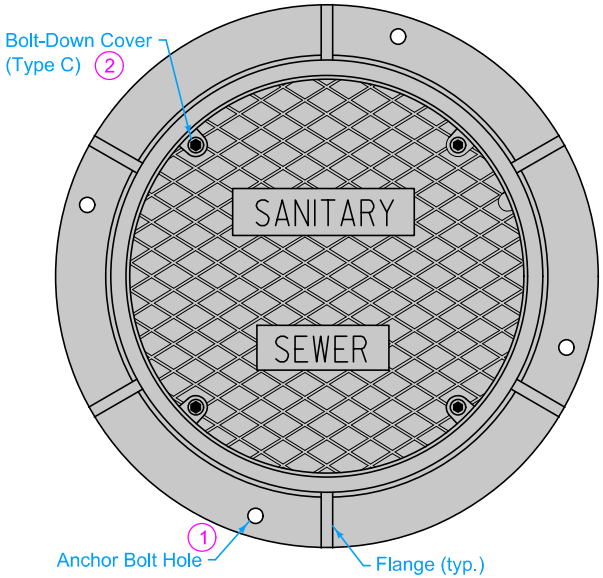

PLAN

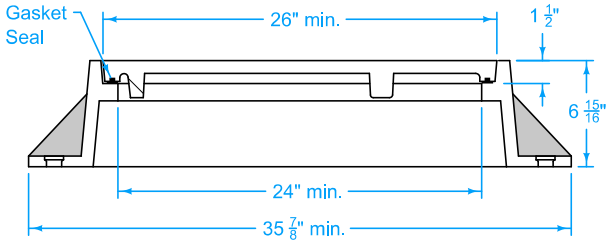

TYPICAL SECTION

TYPE B: HMA

Three-piece floating casting for use in HMA paving

TYPE D: HMA

Three-piece floating casting with bolt-down cover for use in HMA paving (2)

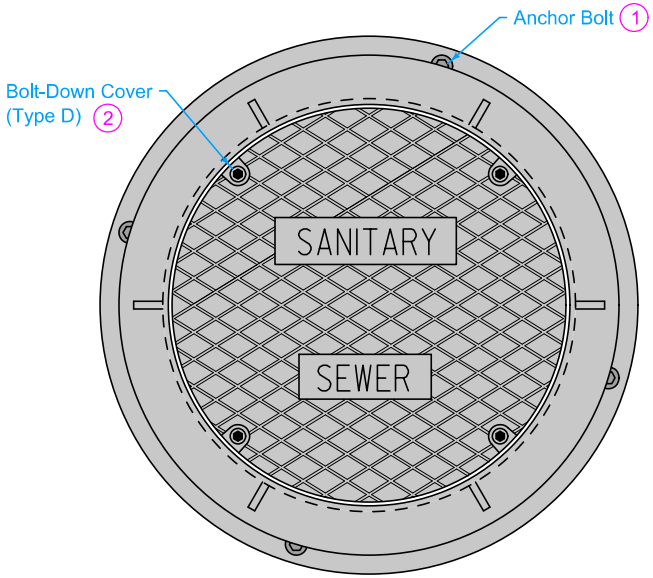

PLAN

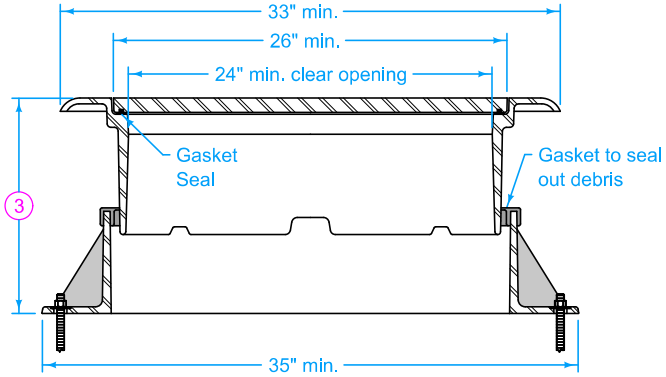

TYPICAL SECTION

Frame Notes:
Size, spacing, and number of lugs and flanges may vary.

Cover Notes:
Roughness pattern and text style may vary.
Minimum one concealed pickhole.

(1) Anchor the lower frame of all three-piece castings to the manhole structure. When specified in the contract documents, anchor the frame of two-piece castings to the manhole structure. If casting frame does not include anchor holes or slots, drill four 7/8 inch diameter holes, equally spaced around the frame.

(2) If specified, furnish bolt down frame and cover with four 1/2 inch minimum diameter stainless steel, hex nut, recessed cap screws. Secure cover with screws, washers, and rubber gasket seals.

(3) Casting height varies. Minimum adjustment range of 4 inches.

SUDAS	IOWA DOT	REVISION	
		4	04-21-20
FIGURE 6010.601	STANDARD ROAD PLAN	SW-601	
		SHEET 1 of 2	

REVISIONS: Add option for 3-piece HMA casting

SUDAS DIRECTOR — DESIGN METHODS ENGINEER

CASTINGS FOR SANITARY SEWER MANHOLES

FIGURE 6010.601 | SHEET 1 OF 2

TYPE B: PCC

Three-piece floating casting for use in PCC paving and PCC boxouts

TYPE D: PCC

Three-piece floating casting with bolt-down cover for use in PCC paving and PCC boxouts

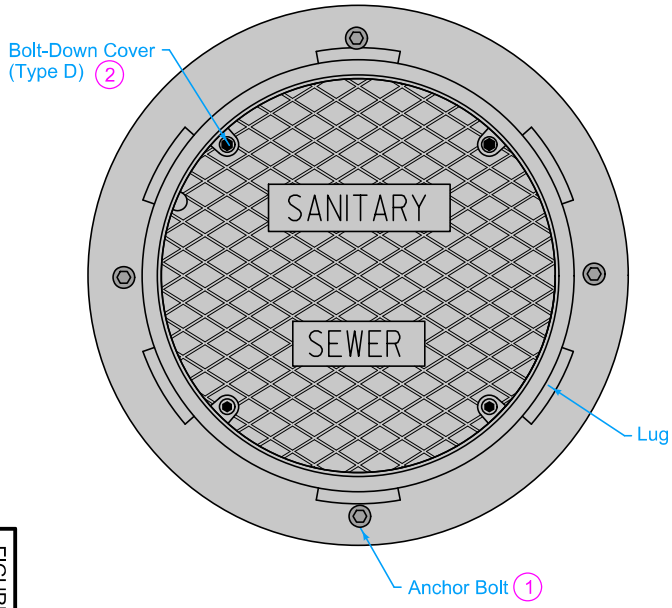

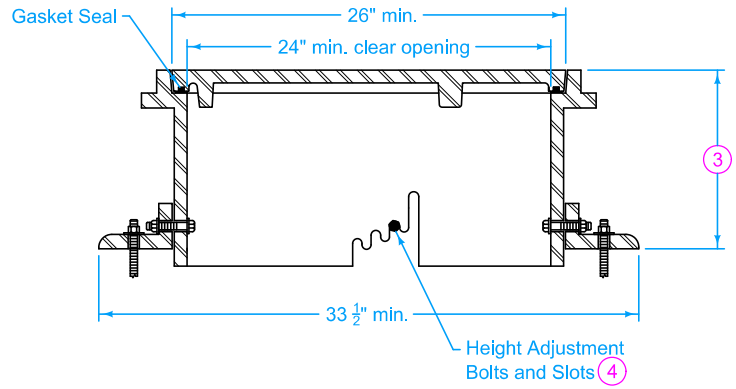

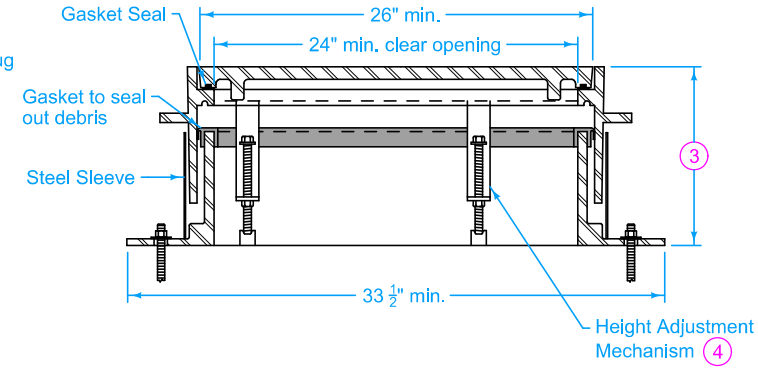

TYPICAL SECTION 5

Frame Notes:
Size, spacing, and number of lugs and flanges may vary.

Cover Notes:
Roughness pattern and text style may vary.
Minimum one concealed pickhole.

1. Anchor the lower frame of all three-piece castings to the manhole structure. When specified in the contract documents, anchor the frame of two-piece castings to the manhole structure. If casting frame does not include anchor holes or slots, drill four 7/8 inch diameter holes, equally spaced around the frame.
2. If specified, furnish bolt down frame and cover with four 1/2 inch minimum diameter stainless steel, hex nut, recessed cap screws. Secure cover with screws, washers, and rubber gasket seals.
3. Casting height varies. Minimum adjustment range of 4 inches.
4. Set casting at proper grade using the adjustment slots or adjustment mechanism. Remove bolts or mechanism upon completion of paving.
5. Height adjustment method may vary; two options are shown.

SUDAS	IOWA DOT	REVISION 4 04-21-20
FIGURE 6010.601	STANDARD ROAD PLAN	SW-601 SHEET 2 of 2

REVISIONS: Add option for 3-piece HMA casting

Paul D. Wigand — SUDAS DIRECTOR
Steven Nichols — DESIGN METHODS ENGINEER

CASTINGS FOR SANITARY SEWER MANHOLES

FIGURE 6010.601 | SHEET 2 OF 2

TYPE E

Two-piece fixed casting

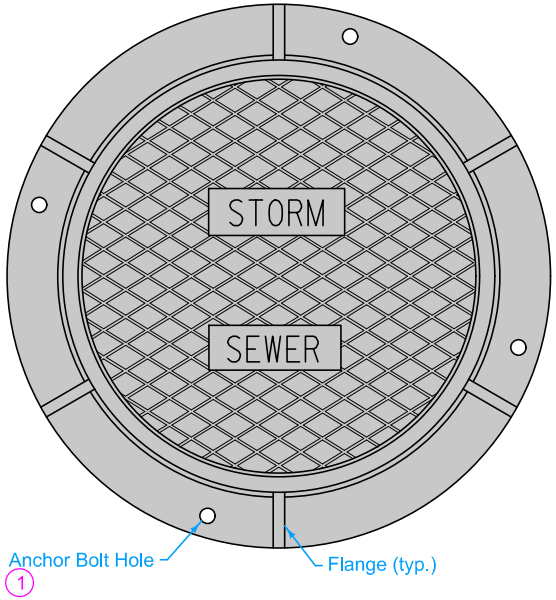

PLAN

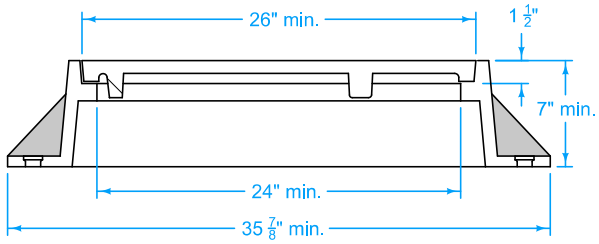

TYPICAL SECTION

TYPE F: HMA

Three-piece floating casting for use in HMA paving

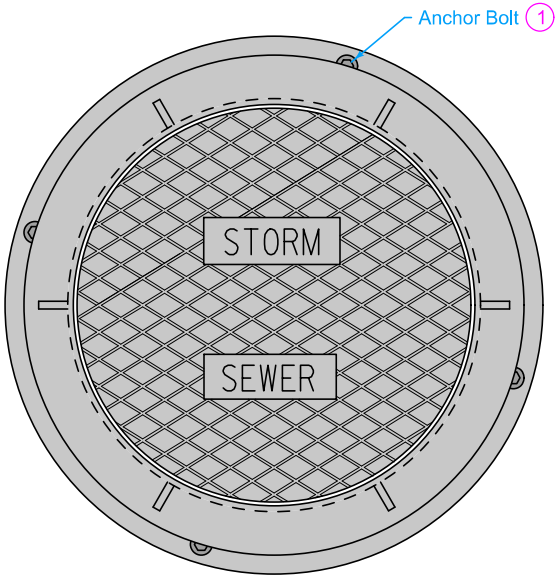

PLAN

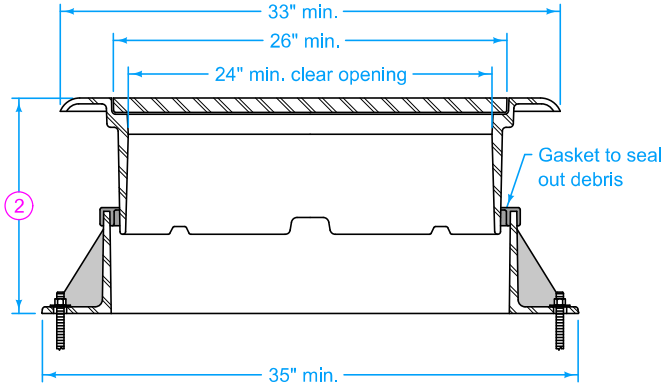

TYPICAL SECTION

Frame Notes:
Size, spacing, and number of lugs and flanges may vary.

Cover Notes:
Roughness pattern and text style may vary.
Minimum one pickhole.

1. Anchor the lower frame of all three-piece castings to the manhole structure. When specified in the contract documents, anchor the frame of two-piece castings to the manhole structure. If casting frame does not include anchor holes or slots, drill four 7/8 inch diameter holes, equally spaced around the frame.

2. Casting height varies. Minimum adjustment range of 4 inches.

SUDAS	IOWA DOT	REVISION 4	04-21-20
FIGURE 6010.602	STANDARD ROAD PLAN	SW-602	SHEET 1 of 3

REVISIONS: Add option for 3-piece HMA casting

SUDAS DIRECTOR — DESIGN METHODS ENGINEER

CASTINGS FOR STORM SEWER MANHOLES

FIGURE 6010.602 | SHEET 1 OF 3

TYPE F: PCC

Three-piece floating casting for use in PCC paving and PCC boxouts

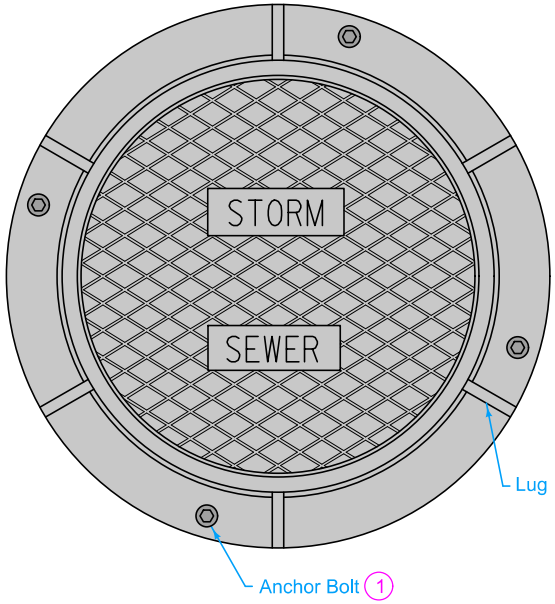

PLAN

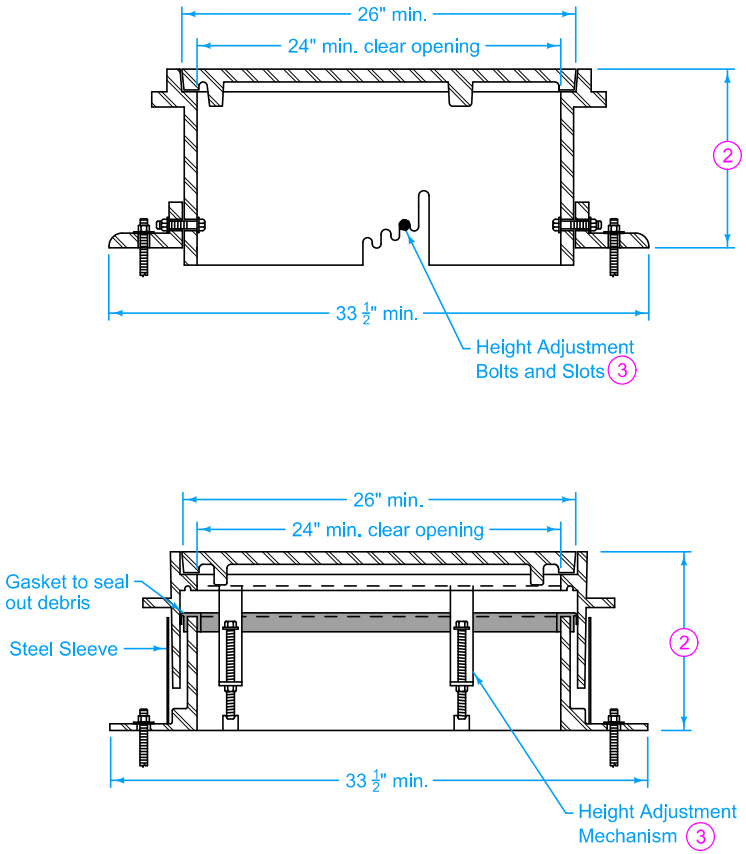

TYPICAL SECTION 4

Frame Notes:
Size, spacing, and number of lugs and flanges may vary.

Cover Notes:
Roughness pattern and text style may vary.
Minimum one pickhole.

1. Anchor the lower frame of all three-piece castings to the manhole structure. When specified in the contract documents, anchor the frame of two-piece castings to the manhole structure. If casting frame does not include anchor holes or slots, drill four 7/8 inch diameter holes, equally spaced around the frame.
2. Casting height varies. Minimum adjustment range of 4 inches.
3. Set casting at proper grade using the adjustment slots or adjustment mechanism. Remove bolts or mechanism upon completion of paving.
4. Height adjustment method may vary; two options are shown.

SUDAS	IOWA DOT	REVISION 4 04-21-20
FIGURE 6010.602	STANDARD ROAD PLAN	SW-602 SHEET 2 of 3

REVISIONS: Add option for 3-piece HMA casting

SUDAS DIRECTOR — DESIGN METHODS ENGINEER

CASTINGS FOR STORM SEWER MANHOLES

FIGURE 6010.602 | SHEET 2 OF 3

TYPE G

Two piece fixed casting

Cover Notes:
Roughness pattern and text style may vary.
Minimum one pickhole.

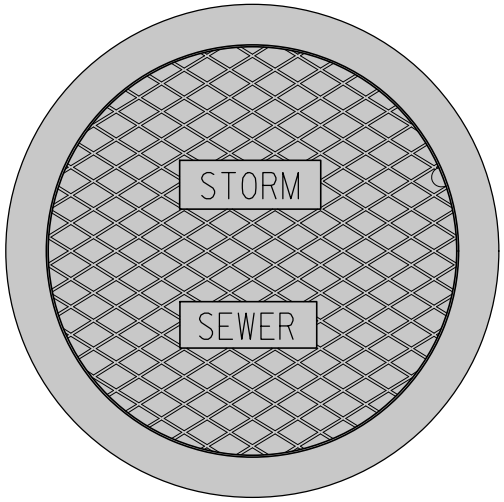

PLAN

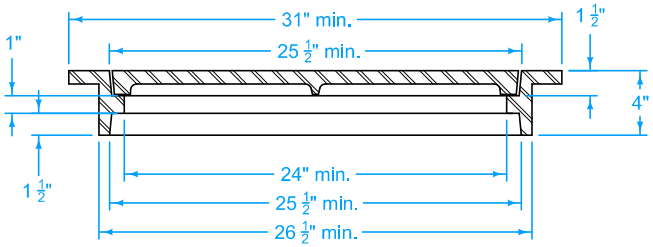

TYPICAL SECTION

SUDAS	IOWA DOT	REVISION 4 04-21-20
FIGURE 6010.602	STANDARD ROAD PLAN	SW-602 SHEET 3 of 3

REVISIONS: Add option for 3-piece HMA casting

SUDAS DIRECTOR — DESIGN METHODS ENGINEER

CASTINGS FOR STORM SEWER MANHOLES

FIGURE 6010.602 | SHEET 3 OF 3

TYPE Q ①

Driveway Grate

(Minimum open area 370 in^2)

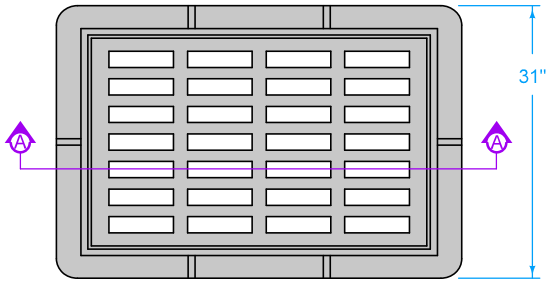

PLAN

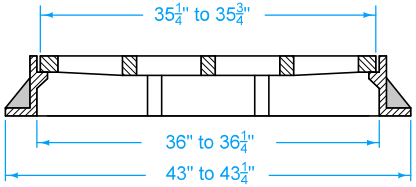

SECTION A-A

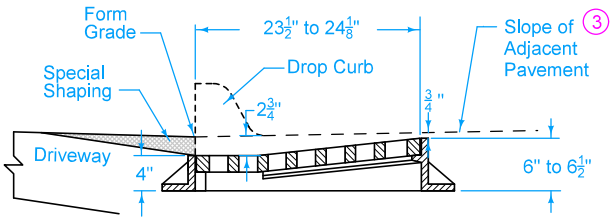

TYPICAL SECTION

TYPE R ②

Curb Inlet Grate

(Minimum open area 180 in^2)

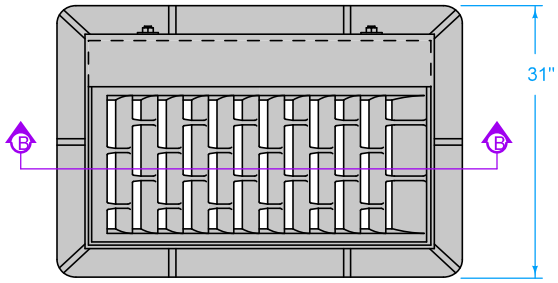

PLAN

Flow

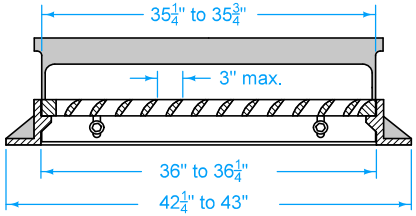

SECTION B-B

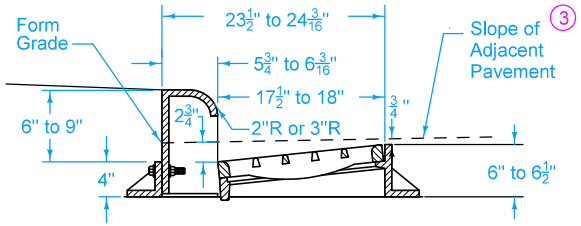

TYPICAL SECTION

① For use at curb drops for driveways. Use only when specified in the contract documents.

② Provide bicycle-safe vane-style grate. At low points, grates with vanes facing both directions of flow are allowed.

③ For details of boxout pavement, refer to SW-514.

SUDAS	IOWA DOT	REVISION 6	10-16-18
FIGURE 6010.603	STANDARD ROAD PLAN	SW-603	SHEET 1 of 2

REVISIONS: Corrected typo on page two that said SHEET 1 of 2.

SUDAS DIRECTOR — DESIGN METHODS ENGINEER

CASTINGS FOR GRATE INTAKES

FIGURE 6010.603 SHEET 1 OF 2

TYPE S ②④

Barrier Intake Grate

(Minimum open area 300 in^2)

② Provide bicycle-safe vane-style grate. At low points, grates with vanes facing both directions of flow are allowed. The Contractor has the choice of which Type S Grate to use.

④ Use ductile iron frame castings meeting the requirements of ASTM A 536.

Frame minimum weight = 220 lbs.
Grate minimum weight = 340 lbs.

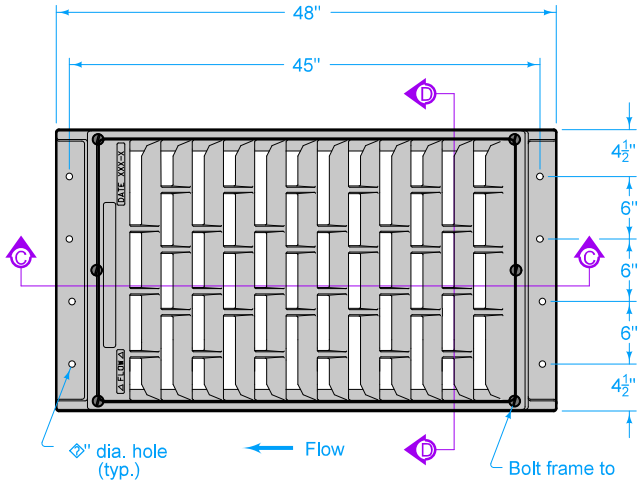

PLAN

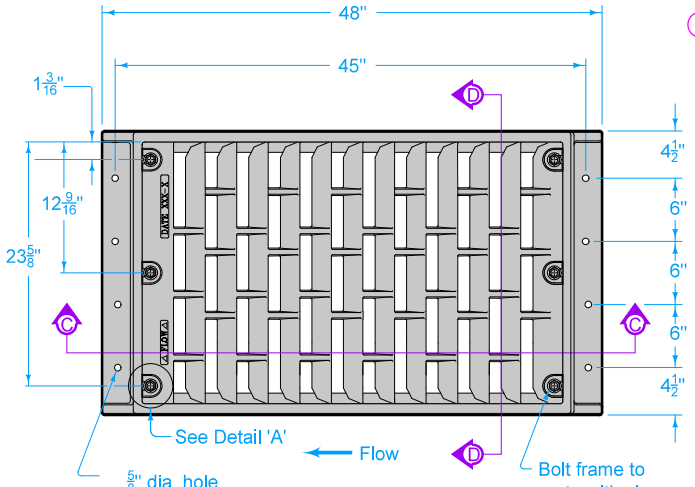

PLAN

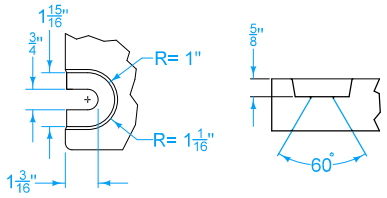

DETAIL'A'

Bolt Slot Detail

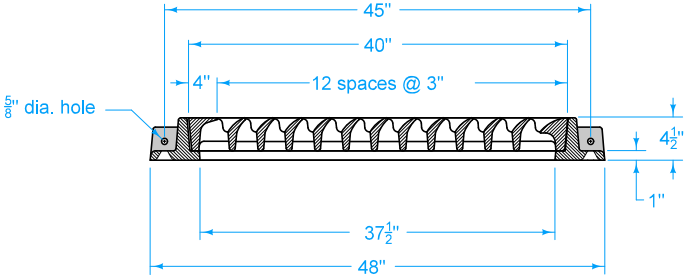

SECTION C-C

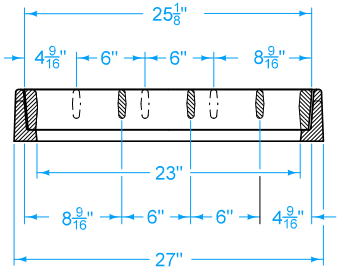

SECTION D-D

SUDAS	IOWA DOT	REVISION 6 10-16-18
FIGURE 6010.603	STANDARD ROAD PLAN	SW-603 SHEET 2 of 2

REVISIONS: Corrected typo on page two that said SHEET 1 of 2.

SUDAS DIRECTOR — DESIGN METHODS ENGINEER

CASTINGS FOR GRATE INTAKES

FIGURE 6010.603 SHEET 2 OF 2

TYPE 4

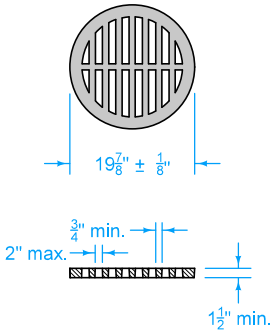

TYPE 4A
For Placement on 18" RCP

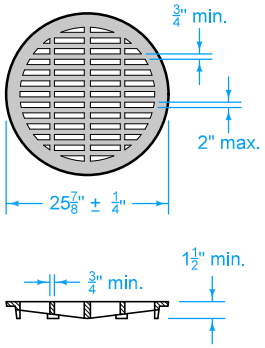

TYPE 4B
For Placement on 24" RCP

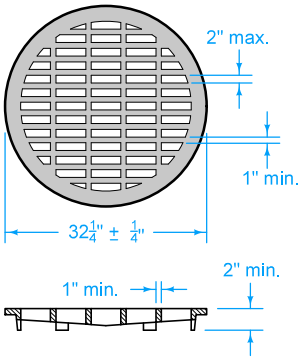

TYPE 4C
For Placement on 30" RCP

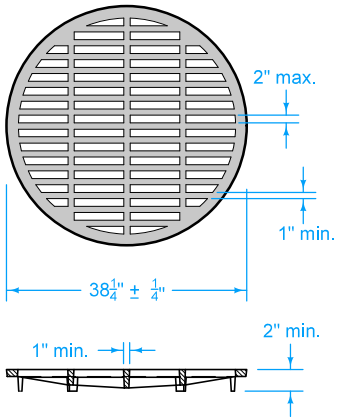

TYPE 4D
For Placement on 36" RCP

TYPE 3
(Light Duty)

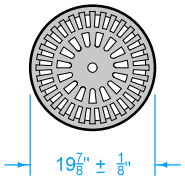

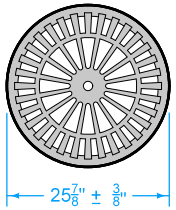

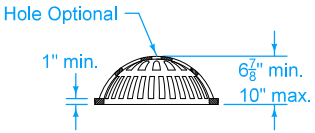

TYPE 3A
For Placement on 18" RCP

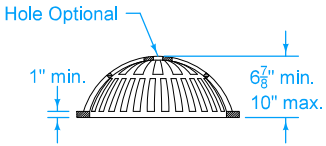

TYPE 3B
For Placement on 24" RCP

TYPE 5
(Light Duty)
For Placement on 24" to 30" RCP

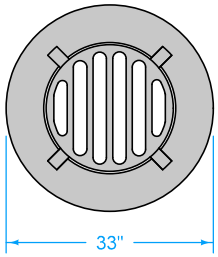

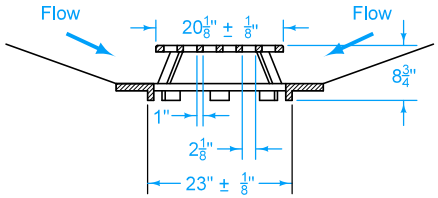

SUDAS	IOWA DOT	REVISION	
		3	04-21-20
FIGURE 6010.604	STANDARD ROAD PLAN	SW-604	
		SHEET 1 of 2	

REVISIONS: Added Type 7 casting. Modified circle notes.

Paul D. Wiegand — SUDAS DIRECTOR
Steven Nichols — DESIGN METHODS ENGINEER

CASTINGS FOR AREA INTAKES

FIGURE 6010.604 SHEET 1 OF 2

TYPE 6

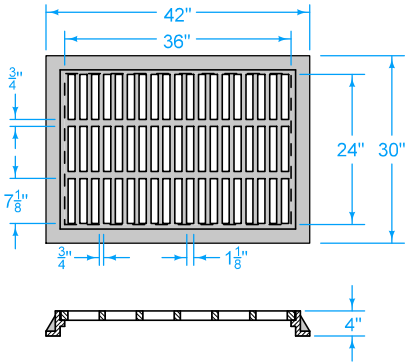

TYPE 7

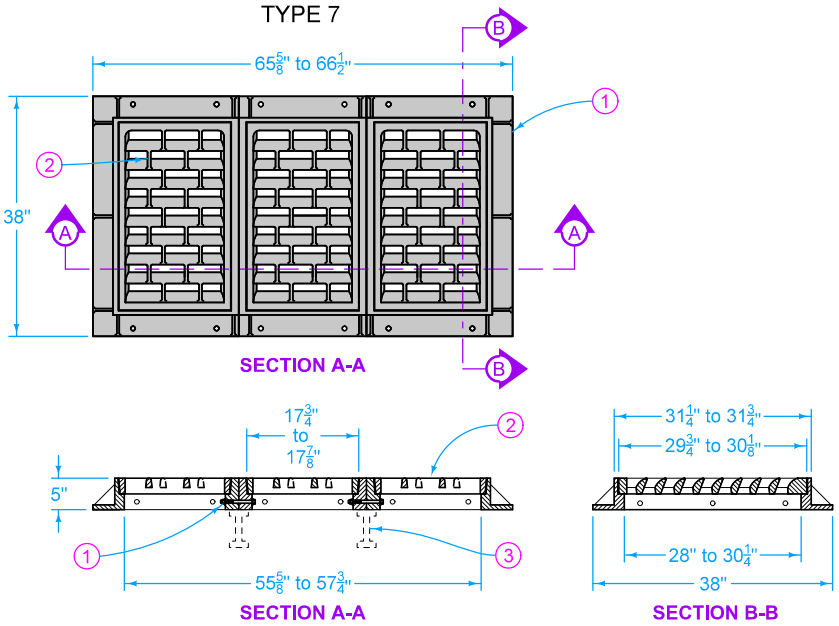

1. Frame provided in three segments (two ends and one center). Bolt segments together as specified by the casting manufacturer.
2. Provide bicycle safe, vane style grates with a minimum open area of 4 square feet. At low points, grates with vanes facing both directions will be allowed.
3. If required by casting manufacturer, provide support beam under all frame joints. Modify structure walls as required to provide pocket for beam.
4. Cast grate without locking lugs so it may be used in an inverted position.

TYPE 9

(Light Duty)

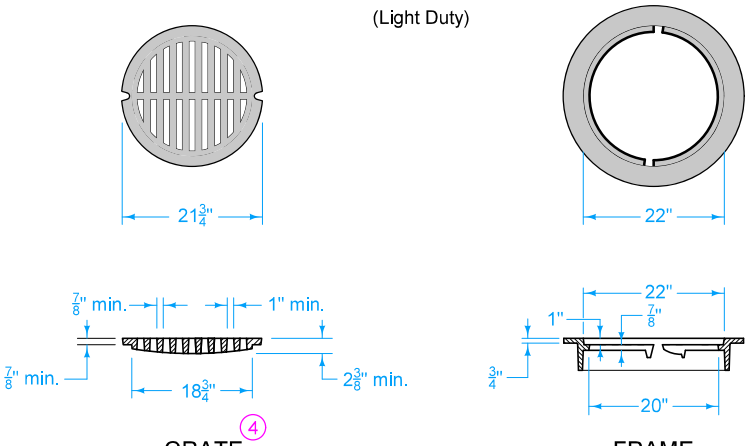

GRATE (4)

Minimum Weight = 85 lbs.

FRAME

Minimum Weight = 75 lbs.

SUDAS	IOWA DOT	REVISION	
		3	04-21-20
FIGURE 6010.604	STANDARD ROAD PLAN	SW-604	
		SHEET 2 of 2	

REVISIONS: Added Type 7 casting. Modified circle notes.

SUDAS DIRECTOR — DESIGN METHODS ENGINEER

CASTINGS FOR AREA INTAKES

FIGURE 6010.604 SHEET 2 OF 2