# Traffic Signals

TS

SECTION

# TS

# Traffic Signals

| NO. | DATE | TITLE |
|---|---|---|
| TS-102 | 04-21-20 | Traffic Signal Pole Foundation |

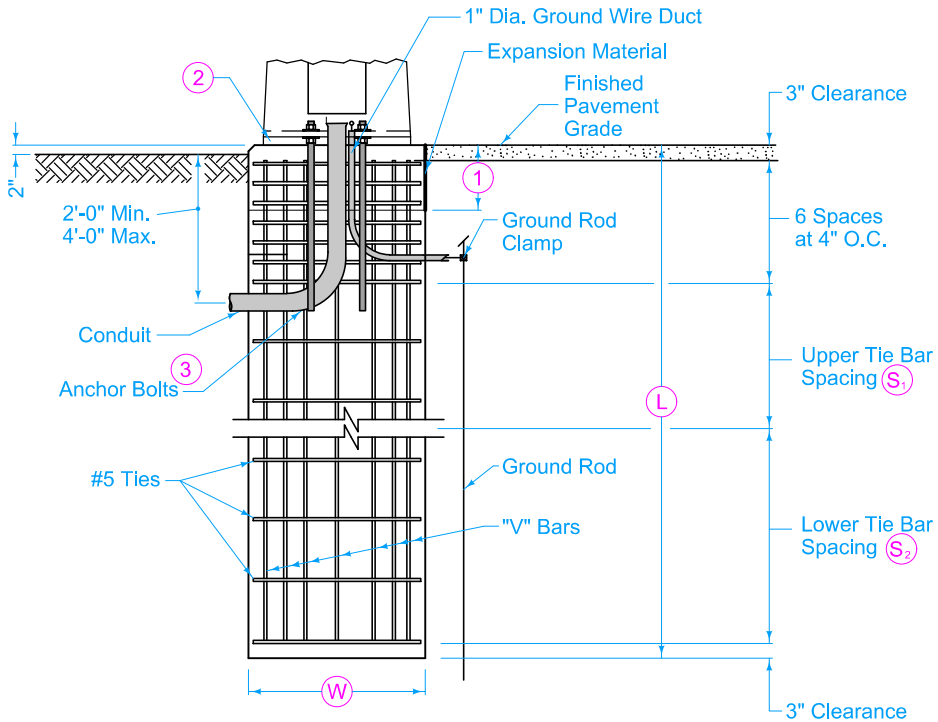


**MAST ARM POLE FOUNDATION IN SOIL**
**TYPE A FOUNDATION**

The Type A Foundation is the normally required foundation construction. Where rock is encountered, the Engineer may approve the use of the Type B or C Foundation. Prior to installing a foundation in rock, obtain a subsurface investigation certified by a geotechnical engineer licensed in the State of Iowa.

1. Shape top 11 inches with forms. See Detail 'A'.
2. Install rodent guard or non-shrink grout with weep hole.
3. Furnish nut, nut and plate, or nut and anchor bolt assembly ring plate on embedded end.

| Max. Mast Arm Length | Foundation | | "V" Bars | | | Tie Bars | | | | |
|---|---|---|---|---|---|---|---|---|---|---|
| | | | | | | | Upper Spacing | | Lower Spacing | |
| | W | L | Count | Size | Length | Count | # Spaces | S1 | # Spaces | S2 |
| 35'-0" | 3'-0" | 12'-0" | 12 | #8 | 11'-6" | 17 | 9 | 12" | N/A | N/A |
| 45'-0" | 3'-0" | 14'-0" | 12 | #8 | 13'-6" | 19 | 11 | 12" | N/A | N/A |
| 55'-0" | 3'-0" | 16'-0" | 12 | #8 | 15'-6" | 25 | 12 | 8" | 5 | 12" |
| 60'-0" | 3'-0" | 18'-0" | 13 | #8 | 17'-6" | 28 | 15 | 8" | 5 | 12" |
| 70'-0" | 3'-6" | 18'-0" | 12 | #10 | 17'-6" | 28 | 15 | 8" | 5 | 12" |
| 80'-0" | 3'-6" | 21'-0" | 14 | #10 | 20'-6" | 40 | 22 | 6" | 10 | 8" |
| 90'-0" | 4'-0" | 22'-0" | 16 | #10 | 21'-6" | 42 | 24 | 6" | 10 | 8" |
| 100'-0" | 4'-0" | 24'-0" | 18 | #10 | 23'-6" | 47 | 32 | 6" | 7 | 8" |

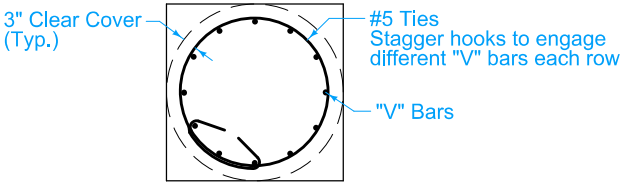


**PLAN VIEW**

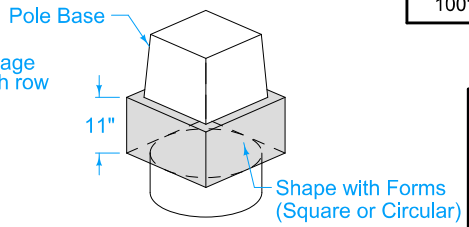


**DETAIL 'A'**

**BENT BAR DETAIL**

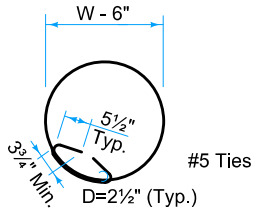


Note: All dimension are out to out.

SUDAS | IOWA DOT | REVISION 4 04-21-20

FIGURE 8010.102 | STANDARD ROAD PLAN | TS-102 | SHEET 1 of 4

REVISIONS: Modified conduit details in MAST ARM POLE FOUNDATION drawings on Sheets 1, 2, and 3.

SUDAS DIRECTOR | DESIGN METHODS ENGINEER

**TRAFFIC SIGNAL POLE FOUNDATION**

FIGURE 8010.102 | SHEET 1 OF 4

Type B Foundation is applicable for traffic signal poles with mast arm lengths up to 60 feet.

If the excavation for a Type B Foundation is left open for more than 1 calendar day, install temporary barrier rail if any part of the excavation is located within the clear zone. Temporary barrier rail layout requires the Engineer's approval.

Competent rock has an average unconfined compressive strength ($q_u$) of at least 2.0 ksi and rock quality designation of at least 90%. Conditions not meeting minimum requirements will require either:
- A site specific design, or
- Using the parameters for Mast Arm Pole Foundation in Soil.

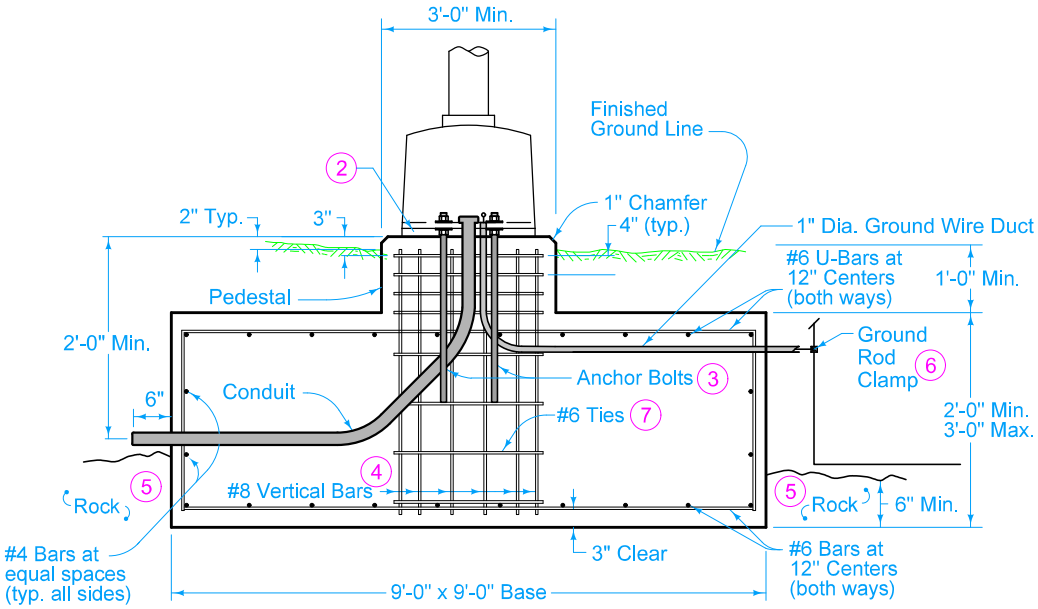


**MAST ARM POLE FOUNDATION IN ROCK**
**TYPE B FOUNDATION**

2 Install rodent guard or non-shrink grout with weep hole.

3 Furnish nut, nut and plate, or nut and anchor bolt assembly ring plate on embedded end.

4 Place 13 equally spaced #8 vertical bars.

5 Cast foundation concrete against competent rock. If foundation is formed, place backfill with concrete cast against rock.

6 When in contact with rock, place ground rods as specified in National Electrical Code, current edition.

7 #6 bars spaced at 8 inch maximum. Ties may be welded to vertical bars.

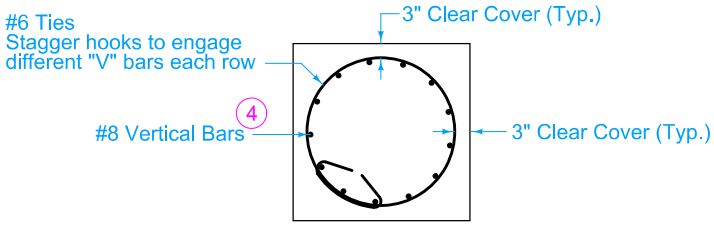


**PLAN VIEW**

**BENT BAR DETAIL**

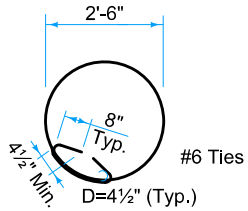


Note: All dimension are out to out.

| | | |
|---|---|---|
| SUDAS | IOWA DOT | REVISION 4 04-21-20 |
| FIGURE 8010.102 | STANDARD ROAD PLAN | TS-102 SHEET 2 of 4 |

REVISIONS: Modified conduit details in MAST ARM POLE FOUNDATION drawings on Sheets 1, 2, and 3.

SUDAS DIRECTOR — DESIGN METHODS ENGINEER

**TRAFFIC SIGNAL POLE FOUNDATION**

FIGURE 8010.102 | SHEET 2 OF 4

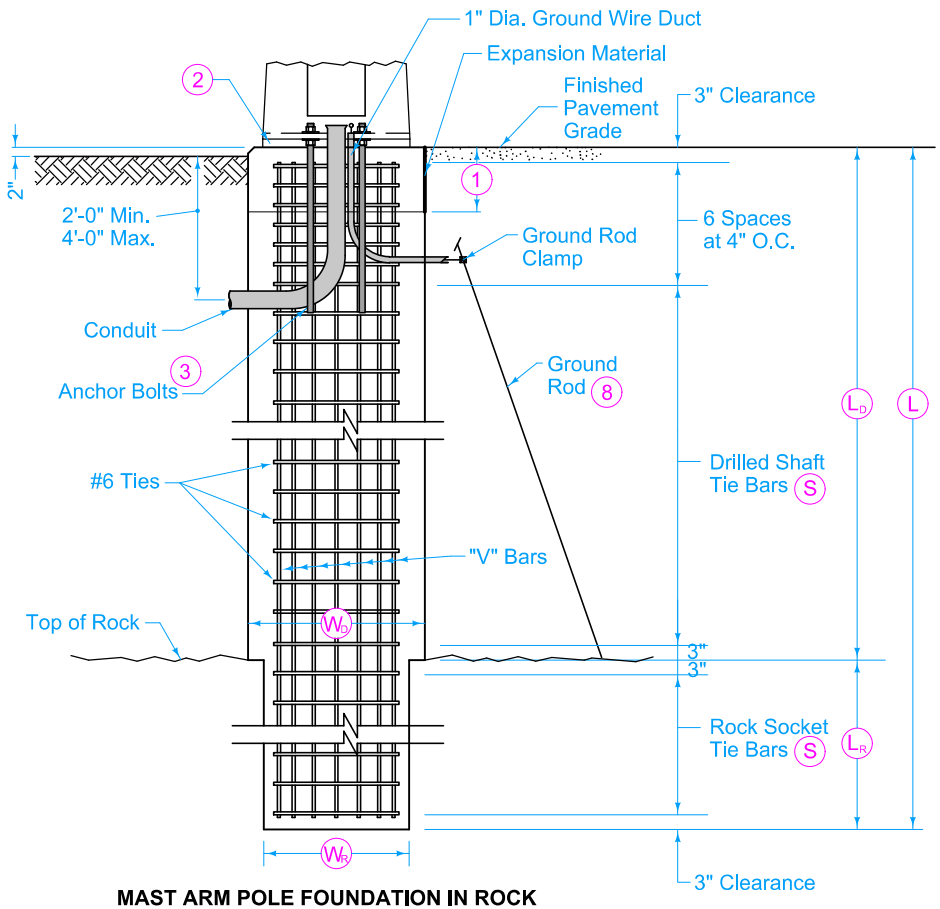


**MAST ARM POLE FOUNDATION IN ROCK**
**TYPE C FOUNDATION**

1. Shape top 11 inches with forms. See Detail 'A'.
2. Install rodent guard or non-shrink grout with weep hole.
3. Furnish nut, nut and plate, or nut and anchor bolt assembly ring plate on embedded end.
8. When in contact with rock, place ground rods as specified in National Electrical Code, current edition.

| Max. Mast Arm Length | Foundation | | | | | | "V" Bars | | | Tie Bars |
|---|---|---|---|---|---|---|---|---|---|---|
| | $W_D$ Min. | $W_R$ Min. | L*** Max. | $L_D$ | $L_R$**** Broken Rock* | $L_R$**** Competent Rock** | Count | Size | Length | S Spacing |
| 35'-0" | 3'-0" | 2'-6" | 12'-0" | VARIES $L_D = (L - L_R)$ | 4'-6" | 3'-0" | 13 | #8 | L - 6" | 6" |
| 45'-0" | 3'-0" | 2'-6" | 14'-0" | | 4'-6" | 3'-0" | 13 | #8 | L - 6" | 6" |
| 55'-0" | 3'-0" | 2'-6" | 16'-0" | | 4'-6" | 3'-0" | 13 | #8 | L - 6" | 6" |
| 60'-0" | 3'-0" | 2'-6" | 18'-0" | | 4'-6" | 3'-0" | 13 | #8 | L - 6" | 6" |
| 70'-0" | 3'-6" | 3'-0" | 18'-0" | | 5'-6" | 3'-6" | 14 | #9 | L - 6" | 5½" |
| 80'-0" | 3'-6" | 3'-0" | 21'-0" | | 5'-6" | 3'-6" | 14 | #9 | L - 6" | 5½" |
| 90'-0" | 4'-0" | 3'-6" | 22'-0" | | 6'-0" | 4'-0" | 15 | #10 | L - 6" | 5½" |
| 100'-0" | 4'-0" | 3'-6" | 24'-0" | | 6'-0" | 4'-0" | 15 | #10 | L - 6" | 5½" |

*Broken rock has an average unconfined compressive strength ($q_u$) of at least 1.0 ksi and rock quality designation of at least 20%.
**Competent rock has an average unconfined compressive strength ($q_u$) of at least 2.0 ksi and rock quality designation of at least 90%.
***Total foundation length L must be sufficient to provide a 3 inch clearance between the bottom of the traffic signal pole anchor bolts and the bottom of the rock socket.
****The Rock Socket Length $L_R$ can be decreased if the total length of the shaft is L long as shown in the table.
Conditions not meeting minimum requirements will require site specific designs or shall use theType A Foundation Soil parameters.

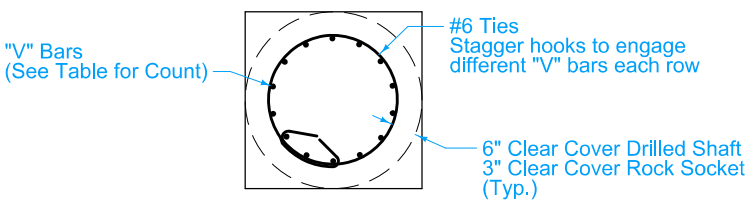


**MAST ARM POLE FOUNDATION**

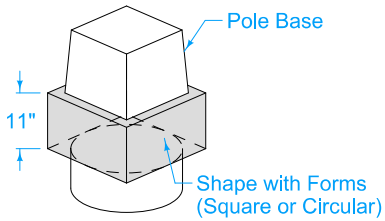


**DETAIL 'A'**

**BENT BAR DETAIL**

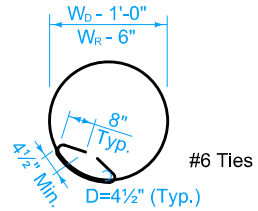


Note: All dimension are out to out.

| SUDAS | IOWA DOT | REVISION 4 04-21-20 |
|---|---|---|
| FIGURE 8010.102 | STANDARD ROAD PLAN | TS-102 SHEET 3 of 4 |

REVISIONS: Modified conduit details in MAST ARM POLE FOUNDATION drawings on Sheets 1, 2, and 3.

SUDAS DIRECTOR — DESIGN METHODS ENGINEER

**TRAFFIC SIGNAL POLE FOUNDATION**

FIGURE 8010.102 | SHEET 3 OF 4

1. Shape top 11 inches with forms. See Detail 'A'.
2. Install rodent guard or non-shrink grout with weep hole.
3. Furnish nut, nut and plate, or nut and anchor bolt assembly ring plate on embedded end.

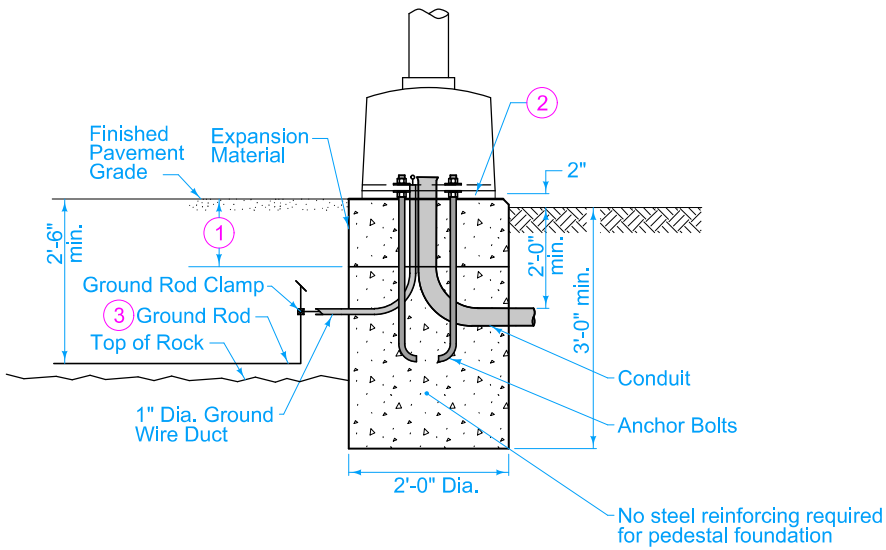


**PEDESTAL POLE FOUNDATION IN SOIL OR ROCK**

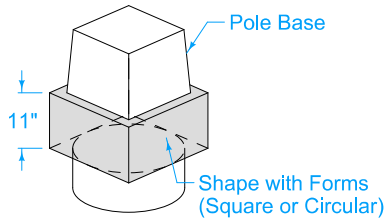


**DETAIL 'A'**

| | | |
|---|---|---|
| SUDAS | IOWA DOT | REVISION 4 04-21-20 |
| FIGURE 8010.102 | STANDARD ROAD PLAN | TS-102 SHEET 4 of 4 |

REVISIONS: Modified conduit details in MAST ARM POLE FOUNDATION drawings on Sheets 1, 2, and 3.

SUDAS DIRECTOR — DESIGN METHODS ENGINEER

**TRAFFIC SIGNAL POLE FOUNDATION**

FIGURE 8010.102 | SHEET 4 OF 4