Entrance Design

Design Manual
Chapter 3
Cross Sections
Originally Issued: 09-22-00
Revised: 06-25-19

This section provides guidelines for entrance design and serves as a supplement to the *Iowa Primary Road Access Management Policy* and Iowa Administrative Code 761—Chapter 112(306A). NCHRP Report 659: Guide for the Geometric Design of Driveways provides further guidance.

Prior to D5, submit plans with entrances to the Office of Traffic and Safety for review. Section 1D-8 provides guidance on the access review submittal procedure.

According to Chapter 112.1(3) of the *Iowa Primary Road Access Management Policy*, all exceptions require written justification. This will be handled by the appropriate District office. The District will note the justification in the access review letter.

Entrance Types

Entrances are classified as Type A, Type B, or Type C based on predominant design vehicle and projected traffic volume.

Type A

Type A entrances serve heavy concentrations of traffic exceeding 150 vehicles per hour and are designed on a case-by-case basis. They are designed like city streets, with large returns, turning lanes, and traffic signals if needed. Geometric, staking, and jointing layouts may be required. Consideration of traffic volume impacts is required, and other operational treatments will be needed.

Type B

Type B entrances serve moderate traffic volumes, typically between 20 and 150 vehicles per hour. These entrances are considered light commercial entrances. Traffic volume impacts should be considered, and other operational treatments may be needed.

Type C

Type C entrances serve light traffic volumes, typically less than 20 vehicles per hour. Residential and farm field entrances are the typical Type C entrances. Special consideration of radii dimensions may be needed for some farm field accesses, given the increasing scale of farm vehicles using these accesses.

Entrance Cases

In areas with curb and gutter, entrances are further classified as Case 1 or Case 2, based on return configuration. Case 1 entrances have radial returns. Case 2 entrances have flared returns. Standard Road Plan MI-210 is used. For Type B entrances, Case 1 is generally used, with Case 2 allowed only on low volume roadways. Type C entrances may use either Case 1 or Case 2.

Note: Entrance cases apply only to roadways with curb and gutter, as depicted in Standard Road Plan MI-210.

Entrance Design

Several factors should be considered for each entrance design, including: available right-of-way, locations of adjacent entrances, mainline operating speed, anticipated traffic volumes of mainline and entrance,

distance from intersections, sight distance, drainage conditions, accommodation for future sidewalk, ADA compliance of sidewalk, and other criteria considered pertinent by the designer.

Special consideration should be given to the land use of the property to be served by an entrance, particularly in cases of commercial entrances. In the design and location of an entrance, every effort should be made to perpetuate internal circulation patterns and avoid reduction of commercial value of the property being served.

Designers should also consider special vehicles, such as limousines or motorhomes, that may use an entrance to ensure appropriate widths and radii and ample vertical clearances exist for these vehicles.

Although Type A entrances are the only entrances that require case-by-case design, designers are encouraged to use turning templates or software to check all entrance designs.

Width and Radius

Type A entrance widths and radii are determined on a case-by-case basis. The typical design vehicle for a Type A entrance depends on surrounding land use and varies from a single-unit truck (SU) to a combination-type vehicle.

For Type B and Type C entrances, Tables 1 and 2 provide minimum and maximum values to be considered for entrance width "W" and paved radii "PR" or shoulder (granular) radii "SR", see Standard Road Plans EW-501 or MI-210. The typical design vehicle for a Type B entrance is a passenger car (P) or single-unit truck (SU). For a Type C entrance, the typical design vehicle is a passenger car (P).

Note: if the predominate type of vehicle using an entrance is a combination-type vehicle, "PR" and "SR" should be based on that type of vehicle (typically a WB-62).

Designers should keep in mind that entrance width and radius are related: decreasing one may necessitate an increase in the other to maintain the same operating speed for the entrance; otherwise, drivers may be forced to reduce their speed appreciably to comfortably negotiate the entrance. This can lead to a significant speed differential between through and turning traffic, which can result in increased potential for crashes, especially for high volume roadways.

Table 1: Minimum and Maximum Values for "W" and "PR" for Curbed Entrances.

type	"W" (ft.)[a]		"PR" (ft.)	
	min.	max.	min.	max.
Type B	24[b]	45[b]	10[f]	20[f]
Type C	20[c]	30[d]	[e][f]	10[f]

[a] The width of the entrance is measured at the street side of the sidewalk. If a sidewalk is not present, the width is to be measured 10 feet back of the curb.
[b] For one-way operation, the minimum allowable width is 12 feet and the maximum allowable width is 30 feet.
[c] If the posted speed limit is 35 mph or less, a minimum width of 15 feet is allowed.
[d] For a joint entrance, the maximum allowable width is 35 feet.
[e] Radius should equal distance between back of curb to street side of sidewalk, not to exceed maximum radius.
[f] A 2:1 flare may be used instead of return radii, with the 2 measured parallel to the entrance centerline and the 1 measured perpendicular to the entrance centerline.

Table 2: Minimum and Maximum Values for "W" and "PR" or "SR" for Uncurbed Entrances.

type		"W" (ft.)[a]		maximum "PR" or "SR" (ft.)				
				entrance angle				
				60°		between 60° and 90°		90°
		min.	max.	acute angle	obtuse angle	acute angle	obtuse angle	--
Type B	granular	24[b]	45[b]	25	50	[e]	[e]	35
	paved			25	60	[e]	[e]	50
Type C	granular	20[c]	30[d]	[f]	[f]	15	15	15
	paved			[f]	[f]	20	20	20

[a] The width of the entrance is measured as shown in Standard Road Plan EW-501.
[b] For one-way operation, the minimum allowable width is 12 feet and the maximum allowable width is 30 feet.
[c] If the posted speed limit is 35 mph or less, a minimum width of 15 feet is allowed.
[d] For a joint entrance, the maximum allowable width is 35 feet.
[e] For entrance angles between 60° and 90°, the maximum radii of the obtuse and acute angles should be interpolated between the values given for 60° entrance angles and rounded to the nearest 5 feet.
[f] Entrance angles less than 60° require department review to establish appropriate radii.

Note: Type C uncurbed entrances are typically designed to 24 feet.

Vertical Alignment

The algebraic difference, or break-over, between successive grades controls the vertical alignment of an entrance. Type A entrance grade and break-overs are determined on a case-by-case basis. The typical design vehicle for a Type A entrance depends on surrounding land use and varies from a single-unit truck (SU) to a combination-type vehicle.

For Type B and C entrances, refer to Table 3 for preferred and acceptable maximum grade and break-overs. When break-overs exceed the preferred values in Table 3, scrapes on the pavement surface become common.

Table 3: Vertical Alignment Considerations.

type	maximum grade[a]	maximum sag break-over		maximum crest break-over	
		preferred[b]	acceptable	preferred[b]	acceptable
Type B	14%	9%	15%[c]	10%[d]	12%[d][f]
Type C	14%	9%[e]	15%[c][e]	10%	12%[f]

[a] See the *Iowa Primary Road Access Management Policy*.
[b] See NCHRP Report 659.
[c] For sag break-overs in excess of 9%, designers will need to verify operational problems will not result from overhang at the front and rear of vehicles likely to use the entrance. Contact the Methods Section.
[d] If low-boy trailers are expected, limit crest break-over to 3.5%.
[e] If a farm or field entrance needs to accommodate trailers, limit sag break-over to 7%.
[f] For crest break-overs in excess of 10%, designers will want to consider using a vertical curve to alleviate potential operational problems. Contact the Methods Section.

Excessive break-over from traveled way to entrance can lead to operational problems. As break-over increases, driver discomfort while traversing the break-over increases forcing drivers to slow appreciably at entrances. This can lead to a significant speed differential between through and turning traffic, which can result in increased potential for crashes, especially for high volume roadways.

Curbed Entrances

As Figure 1 shows, entrance profile (g2) should slope upward (positive grade) from the gutter line to the curb side of the sidewalk (if present). Break-over between the cross slope of the traveled way (g1) and the positive slope of the driveway (g2) should be limited to 9%.

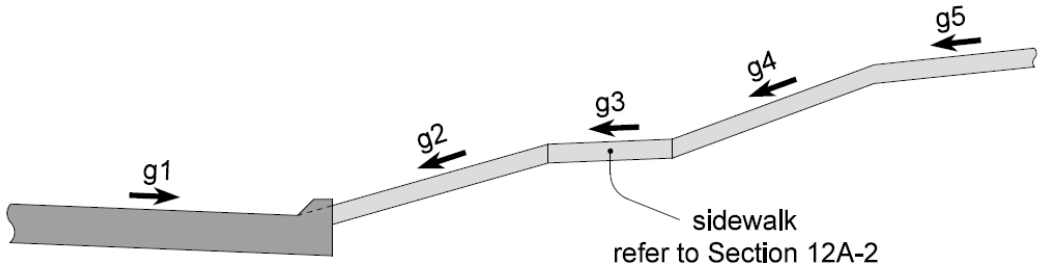

Type B and C entrances: g2, g4, and g5 should not exceed 14% and should be as flat as possible for Type B high volume traffic entrances.

Figure 1: Typical curbed entrance profile.

Uncurbed Entrances

As Figure 2 shows, entrance profile (g2) should slope downward (negative grade) and should be an extension of the shoulder grade (g1) for a distance sufficient to provide a safe platform for a vehicle to stop before entering the roadway. Twenty-five feet is typical for a passenger car. A longer platform should be used if vehicles such as semitrailers or grain trucks will frequently use the entrance. The finished surface elevation of an entrance over a culvert, or the location where a culvert would normally be placed, should be lower than the primary highway pavement, preferably an extension of the shoulder grade. A minimum of 1 foot of cover is required over an entrance culvert.

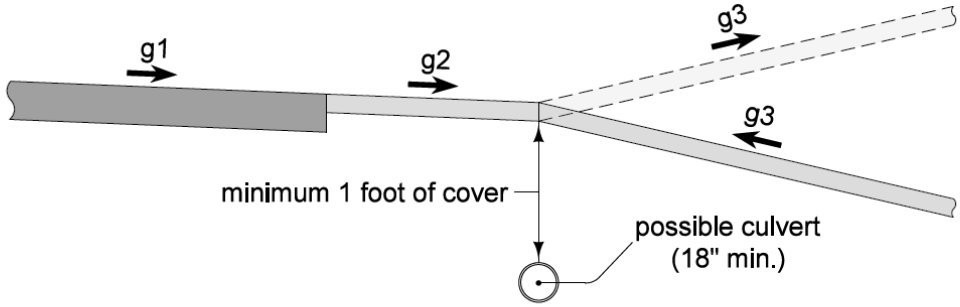

Type B and C entrances: g3 should not exceed 14% and should be as flat as possible for Type B high volume traffic entrances.

Figure 2: Typical uncurbed entrance profile.

Drainage

All entrances should be constructed so as not to impair drainage within the highway right-of-way, nor alter the stability of the highway subgrade. In addition, they should not impair or materially alter drainage of adjacent areas. All culverts, catch basins, drainage channels, and other drainage structures required under driveways as the result of property being developed should be installed according to current standards and specifications.

Surfacing

Curbed

All entrances in curbed settings should be paved to prevent aggregate from washing onto the pavement, curb, and gutters. If the existing drive is not paved, pave the first 10 feet from the back of curb or to the edge of the existing sidewalk. Consider additional paving beyond the sidewalk to prevent aggregate from washing onto the sidewalk.

Uncurbed

All entrances in uncurbed settings should be either paved or granular surfaced. If an entrance is to be granular surfaced, refer to Section 7C-1 for application rates.

Applicable Standard Road Plans

Curbed

Standard Road Plan MI-210 provides construction details for Type B and Type C curbed type entrances. Case 1 is used on most Type B entrances and on some Type C entrances in high-speed areas. Case 2 is used on most Type C entrances, on Type B entrances where space is limited along the curb, on alleys and drives where the existing drive is too narrow, and in areas where no sidewalk exists. Special entrance details other than those shown on MI-210 should be included in the plans.

Sidewalk cross slopes must fulfill the ADA requirements of Section 12A-2. Even if existing adjacent sidewalk is not being reconstructed, sidewalk cross slope through an entrance must fulfill ADA requirements. This may require replacing existing sidewalk through the entrance. Adjacent panels of sidewalk may need to be replaced to transition from entrance sidewalk to existing sidewalk.

If the width of any existing entrance is less than the minimum for that type of entrance, consideration should be given to removing and replacing the existing entrance behind the sidewalk as shown for Case 2 in Standard Road Plan MI-210.

Uncurbed

Standard Road Plan EW-501provides construction details for most uncurbed type entrances. Special entrance details other than those shown on EW-501 should be included in the plans.

Note: According to Iowa Administrative Code 761—Chapter 112.4(10), entrance foreslopes are to transition to a 6:1 (or flatter) slope at the ROW line. However, designers may encounter circumstances where maintaining a 6:1 slope all the way to the ROW line may require substantial earthwork, for example high fill areas or areas of excessively wide ROW. In cases such as these, designers may want to consider transitioning to a steeper slope at the ROW line to reduce earthwork. Document this decision in the same manner as a variance (see section 1C-8).

Curb Drop

Standard Road Plan PV-102 shows two choices for dropped curb height: 1.5 inch and 3 inch. Which curb height to use depends on several factors. A 1.5 inch curb is smoother to drive over and can be traversed at a higher speed, while a 3 inch curb results in a flatter slope for the drive and will better retain water in the gutter. For example, if a driveway slopes down from a roadway, a designer may choose to use a 1.5 inch curb since it is smoother to drive over; however, if water depth in the gutter is expected to exceed 1.5 inches, a 3 inch curb should be used to prevent water from running down the driveway. If a driveway slopes up from a roadway, a 3 inch curb may be used to help reduce the slope of the drive. This is especially important when designing an entrance that may be used by special vehicles such as limousines, semitrailers, or grain trucks, where it may also be necessary to lower the sidewalk grade to provide an even flatter slope.

A 1.5 inch curb should be used for commercial entrances with high volumes. Entrances designed in areas where vehicles are likely to traverse the curb at a high rate of speed should also be

designed with 1.5 inch curbs. Normally, a 3 inch curb is used for residential entrances. A 1.5 inch curb may be used, but will result in a driveway with a steeper slope unless sidewalk grade is lowered.

Where applicable, consider the criteria set by the municipality to determine appropriate dropped curb height.

Tabulating Entrances

Include Tabulation 102-3 in the plans. The Length of Opening columns should only be filled out for curbed type entrances.

Chronology of Changes to Design Manual Section:

003K-002 Entrance Design

6/25/2019	Revised Updated hyperlinks. Updated header logo and text.
5/15/2014	Revised Addressed issues regarding breakovers and maintaining 6:1 all the way to ROW.
5/8/2013	Revised Rewrite to include rural entrances and update to current practice and standards.
11/18/2006	Previously Updated.