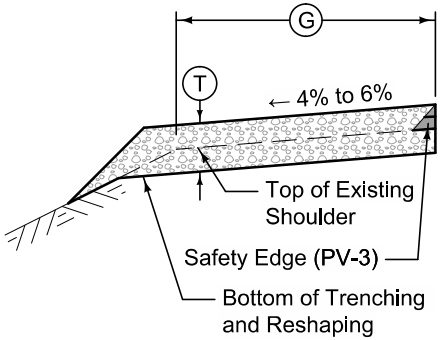

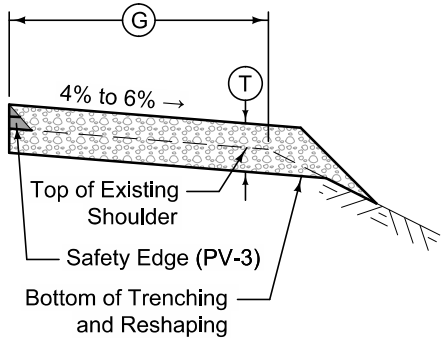

Type 'A' Granular Shoulder

3R_Shldr_G_Overlay_A_
10-18-11

STATION TO STATION		TONS PER STA.	T Feet	G Feet