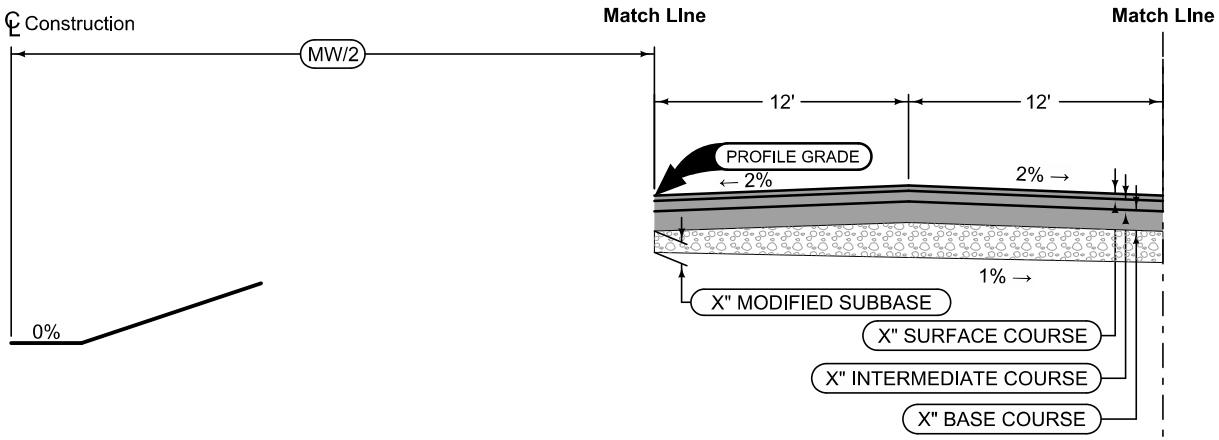

Section shown in the direction of traffic.

4DH_Dprs_
04-21-20

Direction of Travel	BEGIN STATION	END STATION	MW Feet