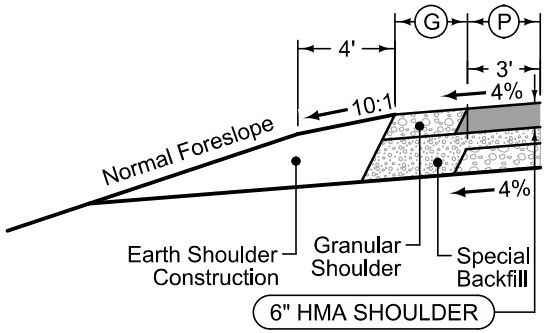

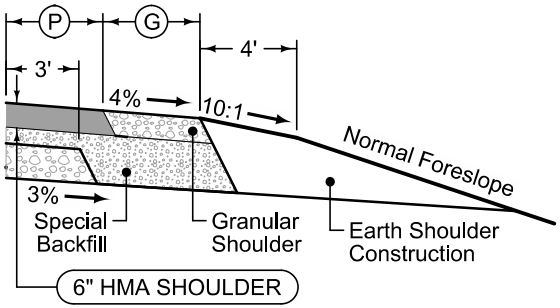

Auxiliary Lane Combination Shoulder

Shoulder Jointing:
Longitudinal joint: B

4_AL_Shldr_C_
04-21-20

P Feet	G Feet