BACKBONES
8 LANE

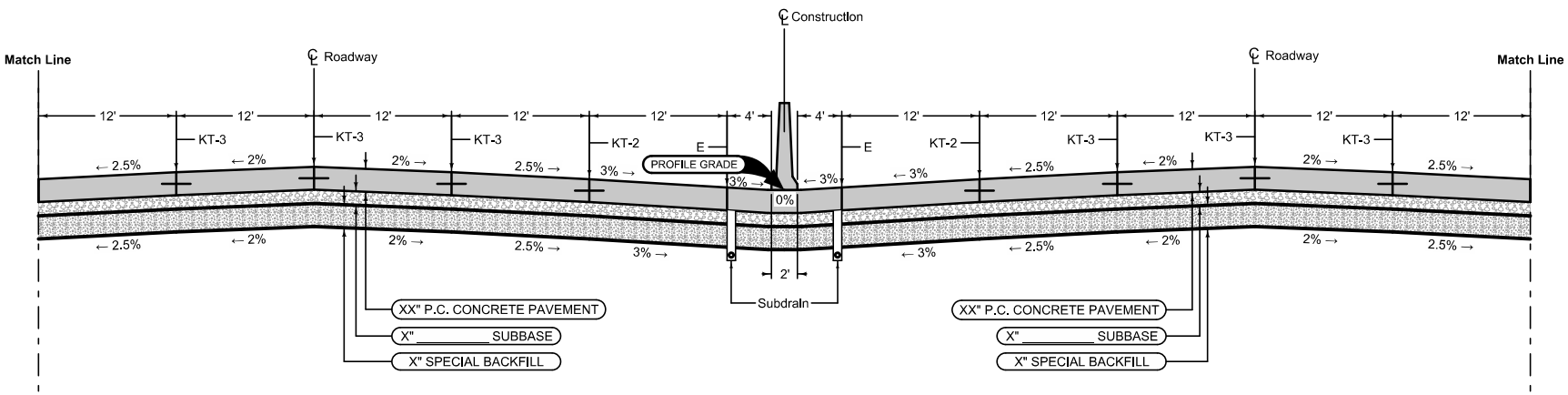

Mainline Jointing:
Transverse joints: CD at 17' spacing

8DP_Closed_ 10-20-20	
BEGIN STATION	END STATION