SHOULDERS
8 LANE

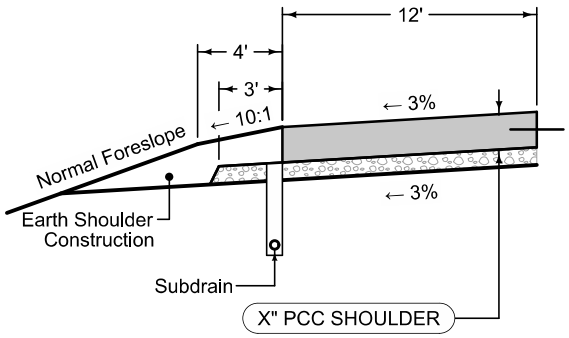

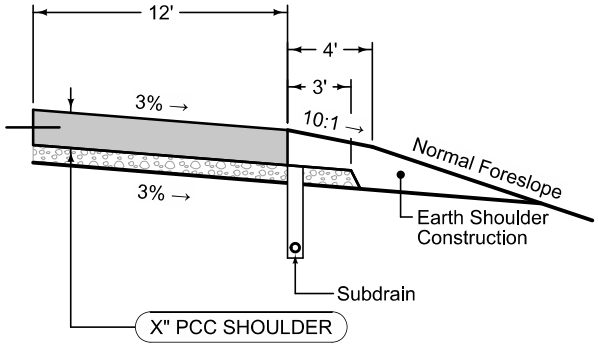

Full Depth PCC Shoulder

Shoulder Jointing:
Longitudinal joint: L-2 or KT-2
Transverse joints: C at 17' spacing

8D_Dprs_P_FullPCC_
10-20-20

Direction of Travel	BEGIN STATION	END STATION