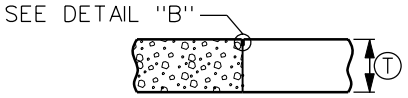

'B'
PLAIN JOINT
FOR ABUTTING PAVEMENT SLABS

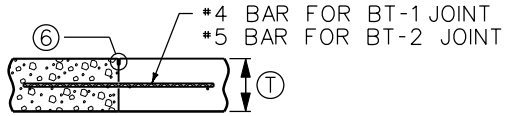

ABUTTING PAVEMENT JOINT - RIGID TIE

WHERE T IS LESS THAN 8"

'BT-1' 5
36" LONG AT 30" CENTERS

WHERE T IS 8" OR MORE

'BT-2'
36" LONG AT 30" CENTERS

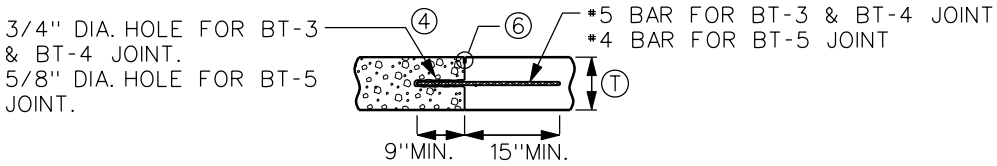

ABUTTING PAVEMENT JOINT - RIGID TIE

WHERE T IS 8" OR MORE

'BT-3'
24" LONG AT 30" CENTERS

'BT-4'
36" LONG AT 15" CENTERS

WHERE T IS LESS THAN 8"

'BT-5'
24" LONG AT 30" CENTERS

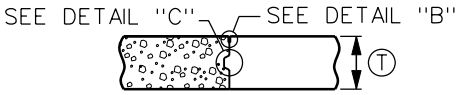

'K'
KEYED JOINT FOR ADJACENT SLABS
WHERE T IS 8" OR MORE

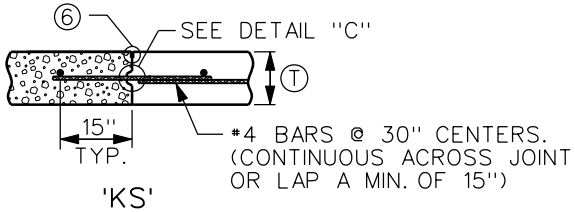

'KS'
LONGITUDINAL JOINT FOR REINFORCED PAVEMENT

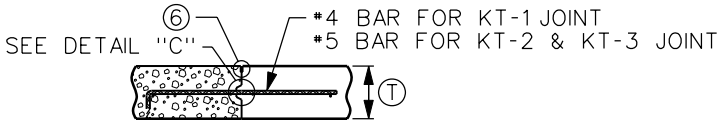

ABUTTING PAVEMENT JOINT - KEYWAY TIE

WHERE T IS LESS THAN 8"

'KT-1' 1 5
30" LONG AT 30" CENTERS

WHERE T IS 8" OR MORE

'KT-2' 1 5
30" LONG AT 30" CENTERS

'KT-3' 1 5
30" LONG AT 15" CENTERS

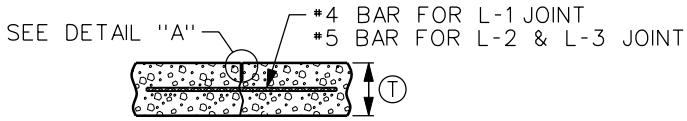

'L-1', 'L-2', & 'L-3'

WHERE T IS LESS THAN 8"

'L-1' 5
36" LONG AT 30" CENTERS

WHERE T IS 8" OR MORE

'L-2' 5
36" LONG AT 30" CENTERS

'L-3' 5
36" LONG AT 15" CENTERS

SEE SHEET 2 FOR GENERAL NOTES AND DETAILS.

REV.	DATE	BY
2	10/17/06	

DATE: 01-01-98

JOINTS (LONGITUDINAL CONTRACTION)

FIGURE: 7010.4B

SHEET 1 OF 2

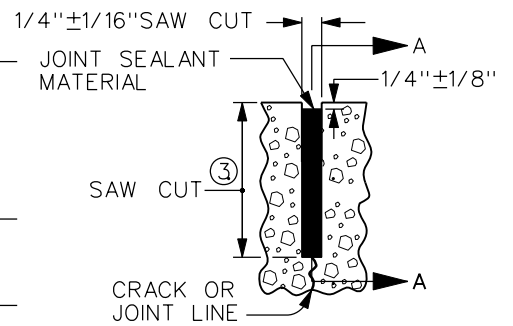

OPTION 1

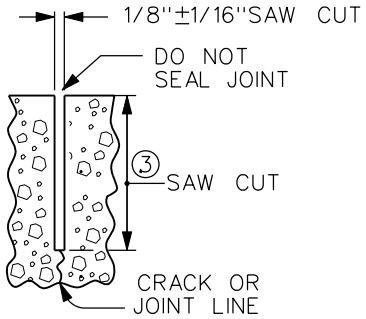

OPTION 2
USE ONLY UPON APPROVAL OF JURISDICTIONAL ENGINEER

DETAIL "A"

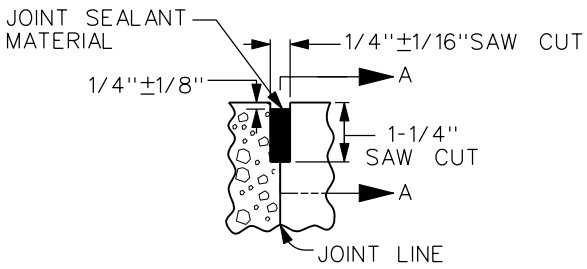

DETAIL "B"

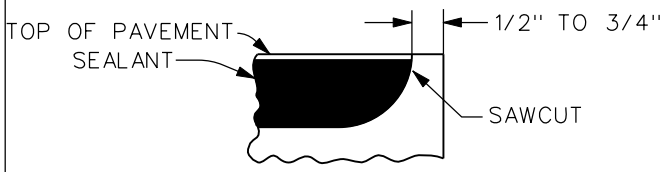

SECTION A-A
DETAIL AT EDGE OF PAVEMENT

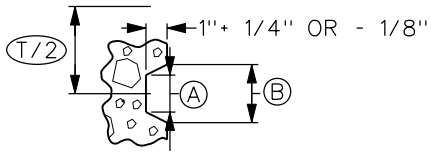

DETAIL "C"

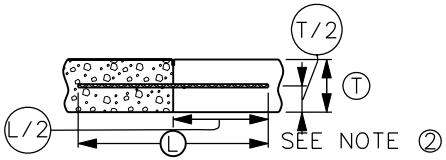

TYPICAL TIE BAR PLACEMENT
APPLIES TO ALL JOINTS UNLESS OTHERWISE DETAILED.

KEYWAY DIMENSIONS			
KEWAY TYPE	PAVEMENT THICKNESS	A	B
STANDARD	8" OR GREATER	1-3/4"	2-3/4"
NARROW	LESS THAN 8"	1"	2"

NOTES:

1. BAR SUPPORTS MAY BE NECESSARY FOR FIXED FORM PAVING, SUBJECT TO THE JURISDICTIONAL ENGINEER'S APPROVAL, TO ENSURE THE BAR REMAINS IN A HORIZONTAL POSITION IN THE PLASTIC CONCRETE.
2. WHEN TYING INTO EXISTING PAVEMENT, (T) REPRESENTS THE DEPTH OF SOUND PORTLAND CEMENT CONCRETE.
3. DEPTH OF SAWCUT SHALL BE T/3.
4. PLACE TIE BARS ACCORDING TO SECTION 7010, 3.04. FOR EXISTING PAVEMENT, SEE SECTION 7010, 2.02 FOR EPOXY REQUIREMENTS.
5. THE FOLLOWING JOINTS ARE INTERCHANGEABLE, SUBJECT TO THE POURING SEQUENCE:
   'KT-1', 'BT-1', AND 'L-1'
   'KT-2' AND 'L-2'
   'KT-3' AND 'L-3'
6. TOOL JOINT. SAWING AND SEALING OF JOINT NOT REQUIRED.

REV.	DATE	BY
4	10/17/06	

DATE: 01-01-98

JOINTS (LONGITUDINAL CONTRACTION)

FIGURE: 7010.4B