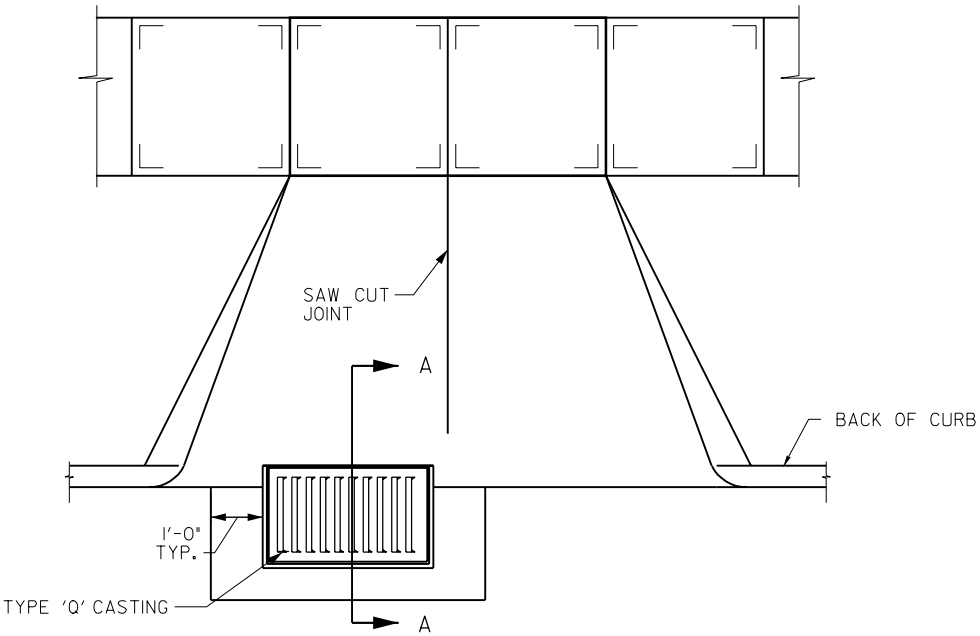

PLAN VIEW

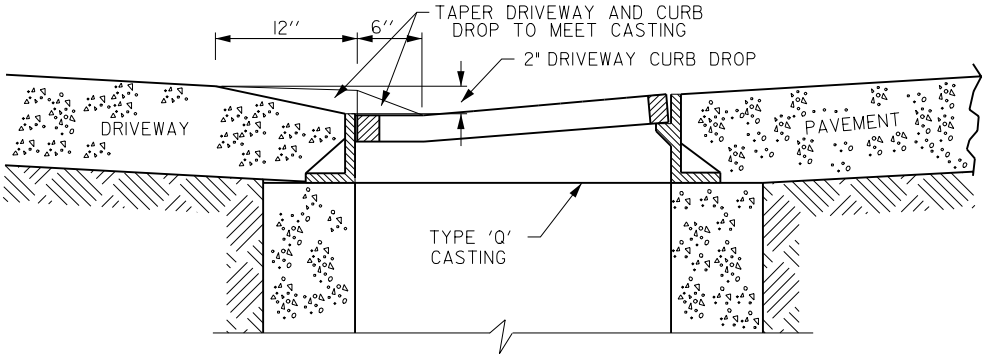

SECTION A-A

1	01/25/01			
REV.	DATE	BY	SPECIAL SHAPING FOR DRIVEWAY INTAKE	FIGURE: 7030.6
DATE: 01-01-98				SHEET 1 OF 1