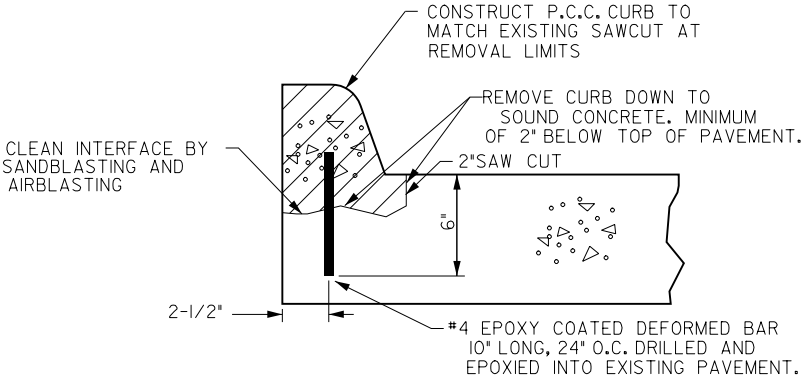

CURB REPLACEMENT - PARTIAL DEPTH

REV.	DATE	BY	PARTIAL DEPTH CURB REPLACEMENT PARTIAL DEPTH PATCH	FIGURE: 7040.8
DATE: 01/25/01				SHEET 1 OF 1