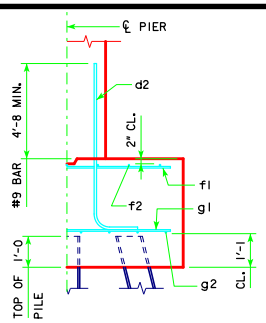

TYPICAL SECTION

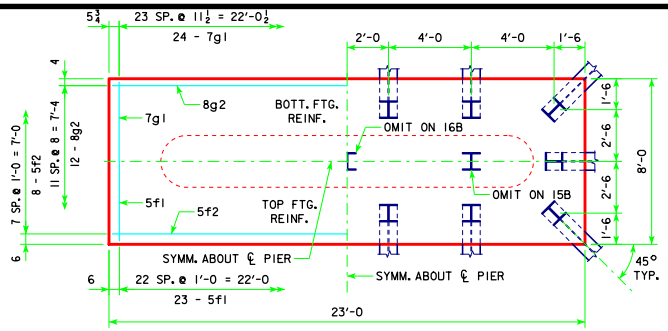

4'-0 x 8'-0 x 23'-0 FOR 15B, 16B & 17B

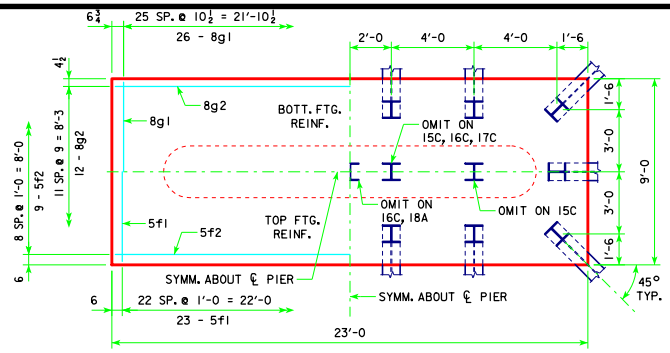

4'-0 x 9'-0 x 23'-0 FOR 15C, 16C, 17C & 18A

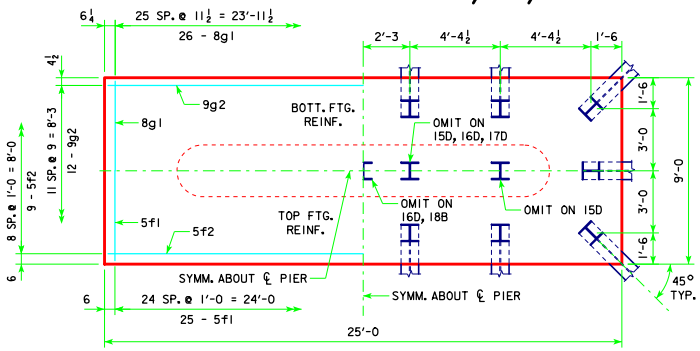

4'-0 x 9'-0 x 25'-0 FOR 15D, 16D, 17D & 18B

NOTE: THE REINFORCING STEEL QUANTITY IS TO BE INCLUDED ON THE SUMMARY QUANTITIES SHEET IN THE PLAN.

NOTE: THE CONCRETE QUANTITY IS TO BE INCLUDED ON THE SUMMARY QUANTITIES SHEET IN THE PLAN.

NOTE: THE PILE TYPE IS TO BE INCLUDED ON THE SUMMARY QUANTITIES SHEET IN THE PLAN.

H IN FT.	℄ - ℄ ABUT. BRG.	PILING (HP10x57) NO. & LAYOUT	① LRFD PU, STRENGTH I DES. BRG. (KIPS)	FOOTING SIZE
25 TO 27	201'-4	15B	214	4' x 8' x 23'
	213'-10	16B	208	
	226'-4	16B	218	
	243'-0	17B	219	
28 TO 30	201'-4	15C	213	4' x 9' x 23'
	213'-10	16C	207	
	226'-4	16C	217	
	243'-0	17C	218	
31 TO 33	201'-4	15C	216	4' x 9' x 23'
	213'-10	16C	210	
	226'-4	16C	219	
	243'-0	18A	212	
34 TO 36	201'-4	15D	214	4' x 9' x 25'
	213'-10	16D	208	
	226'-4	16D	217	
	243'-0	18B	209	
37 TO 40	201'-4	15D	218	4' x 9' x 25'
	213'-10	16D	212	
	226'-4	17D	213	
	243'-0	18B	213	

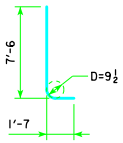

d2

NOTE: D = PIN DIAMETER. DIMENSIONS ARE OUT TO OUT.

FOOTING SIZE	REINFORCING STEEL (ONE FOOTING) BAR	NO., SIZE & SPACING	LENGTH	WEIGHT (LB.)	TOTAL WEIGHT (LB.)	STRUCTURAL CONCRETE (CY)
4' x 8' x 23'	d2	46 - #9 AS SHOWN	9'-1	1421	2896	27.3
	f1	23 - #5 @ 1'-0	7'-8	184		
	f2	8 - #5 @ 1'-0	22'-8	189		
	g1	24 - #7 @ 0'-11½	7'-8	376		
	g2	12 - #8 @ 0'-8	22'-8	726		
4' x 9' x 23'	d2	46 - #9 AS SHOWN	9'-1	1421	3170	30.7
	f1	23 - #5 @ 1'-0	8'-8	208		
	f2	9 - #5 @ 1'-0	22'-8	213		
	g1	26 - #8 @ 0'-10½	8'-8	602		
	g2	12 - #8 @ 0'-9	22'-8	726		
4' x 9' x 25'	d2	46 - #9 AS SHOWN	9'-1	1421	3487	33.3
	f1	25 - #5 @ 1'-0	8'-8	226		
	f2	9 - #5 @ 1'-0	24'-8	232		
	g1	26 - #8 @ 0'-11½	8'-8	602		
	g2	12 - #9 @ 0'-9	24'-8	1006		

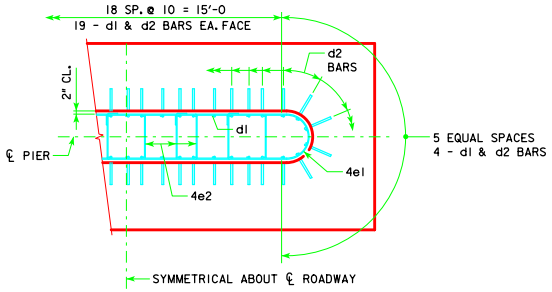

d2 BAR LAYOUT

(SEE SECTION A-A ON SHEET H44-50-14.)

① NOTE: PU, STRENGTH I DESIGN LOAD (KIPS) IS NOT THE VALUE USED IN THE FIELD FOR DRIVING PILES.

FOOTING NOTES:

THESE FOOTINGS ARE DESIGNED AND DETAILED TO BE USED WITH THE CAP AND COLUMN DETAILS OF THE TEE PIERS AS SHOWN ON SHEET H44-50-14.

BATTER PILES IN EXTERIOR ROWS 1:4 IN THE DIRECTION SHOWN.

STEEL PILING USED AS POINT BEARING SHALL HAVE A MINIMUM DISTANCE OF APPROXIMATELY 10 FEET FROM BOTTOM OF FOOTING TO TOP OF BEARING ROCK. THE PILE LAYOUTS ARE SUCH THAT THE DISTANCE CENTER TO CENTER OF ADJACENT PILING SHALL NOT EXCEED 8'-0.

PIER PILES SHALL BE DRIVEN TO VALUES SHOWN IN DESIGN PLANS.

LATEST REVISION DATE

APPROVED BY BRIDGE ENGINEER

IOWA DOT Highway Division

STANDARD DESIGN - 44' ROADWAY, THREE SPAN BRIDGE

PRETENSIONED PRESTRESSED CONCRETE BEAM BRIDGES

SEPTEMBER, 2014

TEE PIER-HP10x57 SRL-2 STEEL PILE FOOTINGS

0° SKEW - H=25' TO 40'

H44-55-14