EPOXY COATED REINFORCING BAR LIST

ONE SUPERSTRUCTURE AND TWO ABUTMENTS

BRIDGE LENGTH

BAR	LOCATION	SHAPE	160'-0 NO.	160'-0 LENGTH	160'-0 WEIGHT	180'-0 NO.	180'-0 LENGTH	180'-0 WEIGHT	200'-0 NO.	200'-0 LENGTH	200'-0 WEIGHT	220'-0 NO.	220'-0 LENGTH	220'-0 WEIGHT
6a1	SLAB TRANSVERSE, TOP & BOTTOM		297	42'-10	19,108	345	42'-10	22,196	393	42'-10	25,284	441	42'-10	28,373
6a2	SLAB TRANSVERSE, TOP-ENDS		94	VARIES	3060	94	VARIES	3060	94	VARIES	3060	94	VARIES	3060
6a3	SLAB TRANSVERSE, BOTTOM-ENDS		94	VARIES	3118	94	VARIES	3118	94	VARIES	3118	94	VARIES	3118
6b1	SLAB LONGITUDINAL TOP & BOTTOM		485	34'-8	25,254	485	38'-8	28,168	582	36'-0	31,470	582	39'-4	34,384
5d2	ABUTMENT DIAPHRAGM, LONGITUDINAL		16	29'-6	493	16	29'-6	493	16	29'-6	493	16	29'-6	493
5d5	ABUTMENT DIAPHRAGM, LONGITUDINAL - END		16	6'-2	103	16	6'-2	103	16	6'-2	103	16	6'-2	103
5d6	ABUTMENT DIAPHRAGM, LONGITUDINAL - B.F.		16	30'-11	516	16	30'-11	516	16	30'-11	516	16	30'-11	516
5d7	PAVING NOTCH, LONGITUDINAL		8	31'-3	261	8	31'-3	261	8	31'-3	261	8	31'-3	261
5d8	ABUT. DIAPHRAGM WING EXT. LONGIT.		-	-	-	-	-	-	-	-	-	-	-	-
5d9	ABUT. DIAPHRAGM WING EXT. LONGIT.		-	-	-	-	-	-	-	-	-	-	-	-
8f1	ABUTMENT FOOTING LONGITUDINAL - B.F.		36	32'-2	3092	36	32'-2	3092	36	32'-2	3092	36	32'-2	3092
8f3	ABUTMENT EXTENSION LONGITUDINAL		-	-	-	-	-	-	-	-	-	-	-	-
8f4	ABUTMENT EXTENSION LONGITUDINAL		-	-	-	-	-	-	-	-	-	-	-	-
8f5	ABUTMENT EXTENSION LONGITUDINAL		-	-	-	-	-	-	-	-	-	-	-	-
8g1	ABUTMENT VERTICAL - B.F.		168	6'-5	2879	168	6'-5	2879	168	6'-8	2991	168	6'-11	3103
8g3	ABUTMENT DIAPHRAGM VERTICAL - B.F.		84	15'-3	3421	84	15'-3	3421	84	15'-3	3421	84	15'-3	3421
6g4	ABUTMENT DIAPHRAGM WING EXT. VERT.		-	-	-	-	-	-	-	-	-	-	-	-
5h1	WING HORIZONTAL BACK FACE		28	6'-8	195	28	6'-8	195	28	6'-8	195	28	6'-8	195
5h2	WING HORIZONTAL BACK FACE		56	4'-11	288	56	4'-11	288	56	4'-11	288	56	4'-11	288
5h3	WING HORIZONTAL TRAFFIC FACE		28	6'-9	198	28	6'-9	198	28	6'-9	198	28	6'-9	198
5h4	WING HORIZONTAL TRAFFIC FACE		-	-	-	-	-	-	-	-	-	-	-	-
5j1	TOP OF SLAB, TRANSVERSE, AT RAIL		380	6'-3	2478	428	6'-3	2791	476	6'-3	3103	524	6'-3	3416
5k1	PAVING NOTCH, TRANSVERSE		86	4'-3	382	86	4'-3	382	86	4'-3	382	86	4'-3	382
5k2	PAVING NOTCH, TRANSVERSE		86	3'-5	307	86	3'-5	307	86	3'-5	307	86	3'-5	307
5p1	ABUTMENT HOOPS		192	10'-6	2103	192	10'-6	2103	192	10'-6	2103	192	10'-6	2103
5p2	ABUTMENT HOOPS AT ENDS		8	12'-8	106	8	12'-8	106	8	12'-8	106	8	12'-8	106
6p3	ABUTMENT BOTTOM AT PILES		36	6'-8	361	36	6'-8	361	36	6'-8	361	36	6'-8	361
5p4	ABUTMENT EXTENSION HOOPS		-	-	-	-	-	-	-	-	-	-	-	-
5s1	WING, VERTICAL		64	5'-7	373	64	5'-7	373	64	5'-7	373	64	6'-2	412
4t1	UNDER BEAMS AT ABUTMENTS		12	4'-7	37	12	4'-7	37	12	4'-7	37	12	4'-7	37
4t2	ABUTMENT DIAPHRAGM, LONGITUDINAL F.F.		36	7'-6	181	36	7'-6	181	36	7'-6	181	36	7'-6	181
	* PILE SPIRAL - NO. 2 BAR		18	38'-6	116	18	38'-6	116	18	38'-6	116	18	38'-6	116
	* SPIRAL SPACER $L\frac{7}{8}\times\frac{7}{8}\times\frac{1}{8}\times$ 0.70		54	1'-10	70	54	1'-10	70	54	1'-10	70	54	1'-10	70
	SEE BARRIER RAIL SHEET RS40-090-10				9155			10,077			10,949			11,870
	REINFORCING STEEL EPOXY COATED (LBS.)		TOTAL (LBS.)		77,655	TOTAL (LBS.)		84,892	TOTAL (LBS.)		92,578	TOTAL (LBS.)		99,966

BAR	240'-0 NO.	240'-0 LENGTH	240'-0 WEIGHT	260'-0 NO.	260'-0 LENGTH	260'-0 WEIGHT	280'-0 NO.	280'-0 LENGTH	280'-0 WEIGHT	300'-0 NO.	300'-0 LENGTH	300'-0 WEIGHT	320'-0 NO.	320'-0 LENGTH	320'-0 WEIGHT	340'-0 NO.	340'-0 LENGTH	340'-0 WEIGHT
6a1	489	42'-10	31,461	537	42'-10	34,549	585	42'-10	37,637	633	42'-10	40,725	681	42'-10	43,813	729	42'-10	46,901
6a2	94	VARIES	3060	94	VARIES	3060	94	VARIES	3060	94	VARIES	3060	94	VARIES	3060	94	VARIES	3060
6a3	94	VARIES	3118	94	VARIES	3118	94	VARIES	3118	94	VARIES	3118	94	VARIES	3118	94	VARIES	3118
6b1	679	36'-11	37,650	679	39'-9	40,540	776	37'-7	43,806	873	35'-11	47,096	873	38'-1	49,937	970	36'-6	53,179
5d2	16	29'-6	493	16	29'-6	493	16	29'-6	493	16	29'-6	493	16	29'-6	493	16	29'-6	493
5d5	16	6'-2	103	16	6'-2	103	16	6'-2	103	16	6'-2	103	16	6'-2	103	16	6'-2	103
5d6	16	30'-11	516	16	30'-11	516	16	30'-11	516	16	30'-11	516	16	30'-11	516	16	30'-11	516
5d7	8	31'-3	261	8	31'-3	261	8	31'-3	261	8	31'-3	261	8	31'-3	261	8	31'-3	261
5d8	-	-	-	-	-	-	-	-	-	-	-	-	-	-	-	24	11'-4	284
5d9	-	-	-	-	-	-	-	-	-	-	-	-	-	-	-	24	11'-3	282
8f1	36	32'-2	3092	36	32'-2	3092	36	32'-2	3092	36	32'-2	3092	36	32'-2	3092	36	32'-2	3092
8f3	-	-	-	-	-	-	-	-	-	-	-	-	-	-	-	16	10'-8	456
8f4	-	-	-	-	-	-	-	-	-	-	-	-	-	-	-	8	9'-2	196
8f5	-	-	-	-	-	-	-	-	-	-	-	-	-	-	-	8	8'-2	175
8g1	168	6'-11	3103	168	7'-1	3178	168	7'-2	3215	168	7'-2	3215	168	7'-2	3215	168	7'-6	3365
8g3	84	15'-3	3421	84	15'-3	3421	84	15'-3	3421	84	15'-3	3421	84	15'-3	3421	84	15'-3	3421
6g4	-	-	-	-	-	-	-	-	-	-	-	-	-	-	-	32	6'-0	289
5h1	28	6'-8	195	28	6'-8	195	28	6'-8	195	28	6'-8	195	28	6'-8	195	36	6'-8	251
5h2	56	4'-11	288	56	4'-11	288	56	4'-11	288	56	4'-11	288	56	4'-11	288	12	4'-11	62
5h3	28	6'-9	198	28	6'-9	198	28	6'-9	198	28	6'-9	198	28	6'-9	198	36	6'-9	254
5h4	-	-	-	-	-	-	-	-	-	-	-	-	-	-	-	12	4'-11	62
5j1	572	6'-3	3729	620	6'-3	4042	668	6'-3	4355	716	6'-3	4668	764	6'-3	4981	812	6'-3	5294
5k1	86	4'-3	382	86	4'-3	382	86	4'-3	382	86	4'-3	382	86	4'-3	382	86	4'-3	382
5k2	86	3'-5	307	86	3'-5	307	86	3'-5	307	86	3'-5	307	86	3'-5	307	86	3'-5	307
5p1	216	10'-6	2366	216	10'-6	2366	216	10'-6	2366	216	10'-6	2366	200	10'-6	2191	200	10'-6	2191
5p2	8	12'-8	106	8	12'-8	106	8	12'-8	106	8	12'-8	106	8	12'-8	106	8	12'-8	106
6p3	40	6'-8	401	40	6'-8	401	40	6'-8	401	40	6'-8	401	44	6'-8	441	44	6'-8	441
5p4	-	-	-	-	-	-	-	-	-	-	-	-	-	-	-	24	10'-8	267
5s1	64	6'-2	412	64	6'-2	412	64	6'-2	412	64	6'-2	412	64	6'-2	412	64	6'-11	462
4t1	12	4'-7	37	12	4'-7	37	12	4'-7	37	12	4'-7	37	12	4'-7	37	12	4'-7	37
4t2	36	7'-6	181	36	7'-6	181	36	7'-6	181	36	7'-6	181	36	7'-6	181	36	7'-6	181
* PILE SPIRAL - NO. 2 BAR	20	38'-6	129	20	38'-6	129	20	38'-6	129	20	38'-6	129	22	38'-6	142	26	38'-6	168
* SPIRAL SPACER $L\frac{7}{8}\times\frac{7}{8}\times\frac{1}{8}\times$ 0.70	60	1'-10	77	60	1'-10	77	60	1'-10	77	60	1'-10	77	66	1'-10	85	78	1'-10	101
SEE BARRIER RAIL SHEET RS40-090-10			12,738			13,651			14,525			15,444			16,321			17,671
REINFORCING STEEL EPOXY COATED (LBS.)	TOTAL (LBS.)		107,824	TOTAL (LBS.)		115,103	TOTAL (LBS.)		122,681	TOTAL (LBS.)		130,291	TOTAL (LBS.)		137,296	TOTAL (LBS.)		147,428

* EPOXY COATING NOT REQUIRED

BENT BAR DETAILS

NOTE: ALL DIMENSIONS ARE OUT TO OUT.
D= PIN DIAMETER

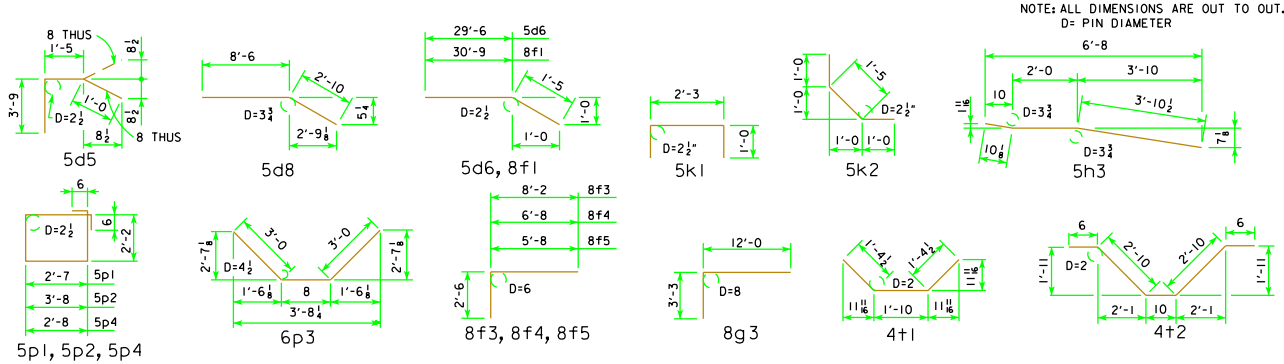

LATEST REVISION DATE

APPROVED BY BRIDGE ENGINEER

Iowa Department of Transportation
Highway Division

STANDARD DESIGN - 40' ROADWAY, 3 SPAN BRIDGES

ROLLED STEEL BEAM BRIDGES

JUNE, 2010

DECK AND ABUTMENT REINFORCEMENT 45° SKEW

RS40-040-10