DO NOT USE ON PRIMARY ROADWAYS

BEDDING CLASSES

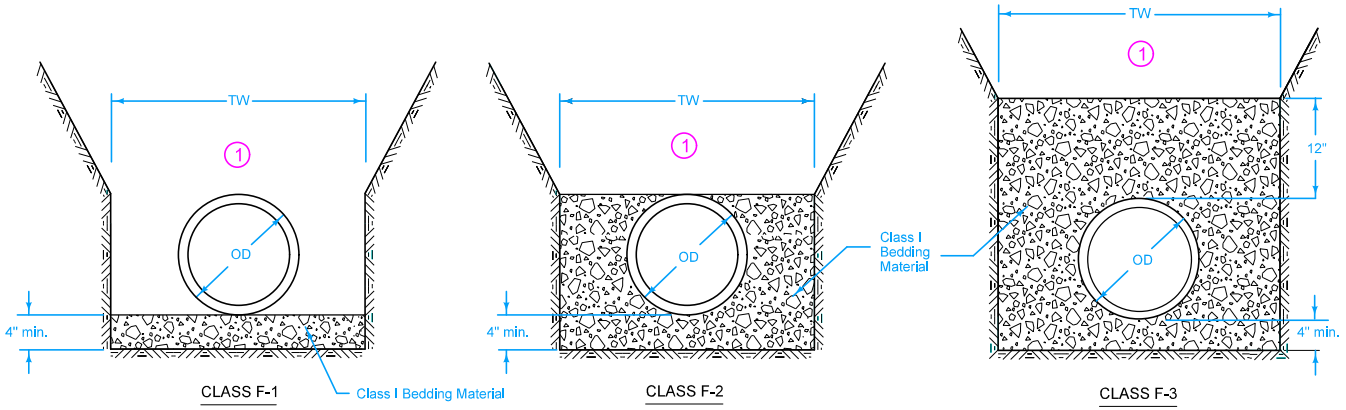

CLASS F-1 CLASS F-2 CLASS F-3

1. Place remainder of bedding and backfill materials as specified in the contract documents.
2. Minimum depth of bury 12 inches or as specified by the manufacturer.

ALLOWABLE BEDDING CLASSES

PIPE MATERIAL	STORM SEWER	SANITARY SEWER
Ductile Iron	F-1, F-2, F-3	F-1, F-2, F-3
HDPE	F-2, F-3	Not allowed
Polypropylene	F-2, F-3	F-3
PVC	F-2, F-3	F-3

Key

OD = Outside diameter of pipe

TW = Trench width at top of pipe:
Min. = OD+18 Inches OR 1.25xOD+12 Inches
(whichever is greater)

ALLOWABLE BURY DEPTH (2)

PVC PIPE

Pipe Diameter (in)	ASTM D 3034			ASTM F 679	ASTM F 949	ASTM F 1803	ASTM D 2680
	Solid Wall			Solid Wall	Corrug. Exterior	Closed Profile	Composite (Truss Type)
	SDR 23.5	SDR 26	SDR 35	SDR 35			
8	30'	28'	24'	---	24'	---	32'
10	30'	28'	24'	---	24'	---	32'
12	30'	28'	24'	---	24'	---	32'
15	30'	28'	24'	---	24'	---	32'
18	---	---	---	24'	24'	---	---
21	---	---	---	24'	24'	24'	---
24	---	---	---	24'	24'	24'	---
27	---	---	---	24'	---	24'	---
30	---	---	---	24'	24'	24'	---
33	---	---	---	24'	---	---	---
36	---	---	---	24'	24'	24'	---
42	---	---	---	24'	---	24'	---
48	---	---	---	24'	---	24'	---
54	---	---	---	---	---	24'	---
60	---	---	---	---	---	24'	---

DUCTILE IRON, AWWA C151, CLASS 52

Pipe Diameter (in)	Class F-1 Bedding	Class F-2 Bedding	Class F-3 Bedding
4	40'	40'	40'
6	40'	40'	40'
8	40'	40'	40'
10	40'	40'	40'
12	37'	40'	40'
14	31'	40'	40'
16	28'	37'	40'
18	25'	34'	40'
20	23'	32'	40'
24	20'	29'	38'
30	18'	23'	31'
36	18'	22'	30'
42	17'	21'	29'
48	16'	19'	27'
54	16'	19'	27'

HDPE PIPE

Pipe Diameter (in)	AASHTO M 294
12	8'
15	9'
18	9'
24	9'
30	9'
36	9'
42	8'
48	8'
54	8'
60	8'

POLYPROPYLENE PIPE

Pipe Diameter (In)	ASTM F 2764
12	24'
15	25'
18	22'
24	20'
30	22'
36	21'
42	22'
48	23'
54	21'
60	21'

SUDAS | IOWA DOT | REVISION 4 04-20-21

FIGURE 3010.103 | STANDARD ROAD PLAN | SW-103

SHEET 1 of 1

REVISIONS: Added note DO NOT USE ON PRIMARY ROADWAYS.

Paul D. Wiegand — SUDAS DIRECTOR

Stuart Nielsen — DESIGN METHODS ENGINEER

FLEXIBLE GRAVITY PIPE TRENCH BEDDING

FIGURE 3010.103 SHEET 1 OF 1