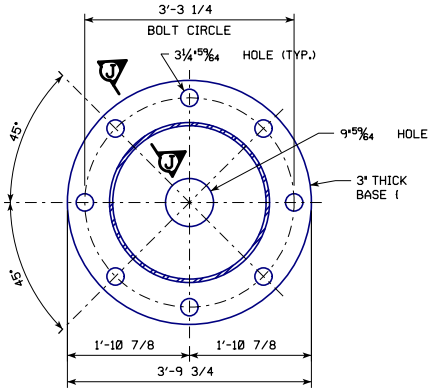

SECTION H-H

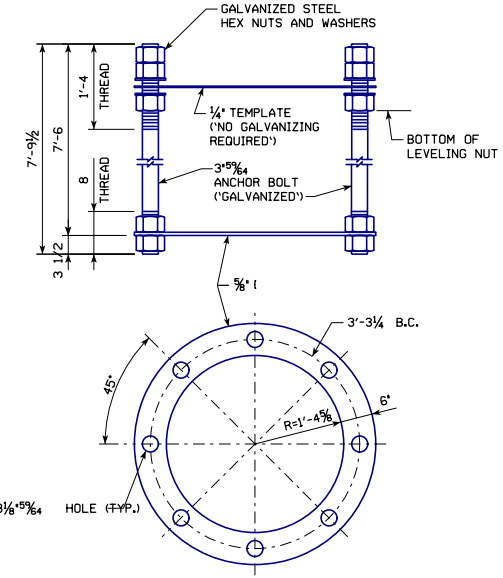

ANCHOR BOLT ASSEMBLY

ALL ANCHOR BOLT MATERIALS AND GALVANIZING SHALL BE IN ACCORDANCE WITH ARTICLE 4187.01, C, 3 OF THE STANDARD SPECIFICATIONS.

WEIGHT OF ONE ANCHOR BOLT ASSEMBLY: 2063 LBS. (INCLUDES TEMPLATE, EXCLUDES GALVANIZING WEIGHT)

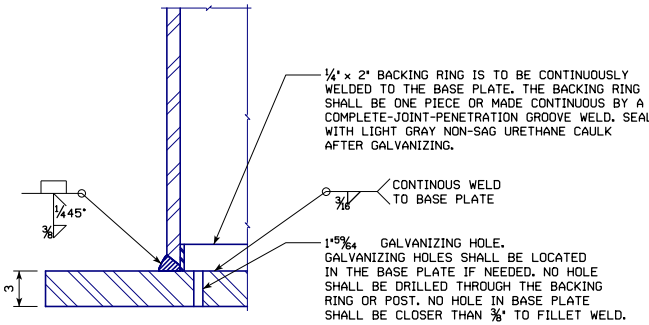

SECTION J-J

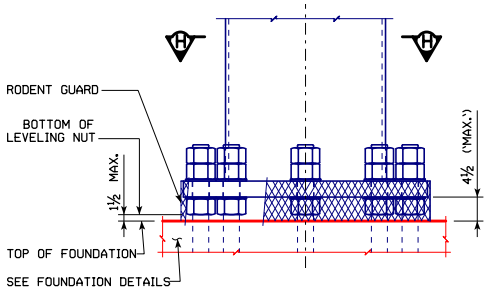

POST BASE DETAIL

SHOWING THE RODENT GUARD

THE RODENT GUARD SHALL BE PLACED AROUND THE BASE PLATE.

THE RODENT GUARD IS STAINLESS STEEL STANDARD GRADE WIRE CLOTH, ¼" MAXIMUM OPENING WITH A MINIMUM WIRE DIAMETER OF AWG NO. 16 WITH A MINIMUM 2" LAP.

SECURE WIRE CLOTH TO BASE PLATE AFTER ERECTION WITH ¾" STAINLESS STEEL BANDING. THE RODENT GUARD SHALL NOT EXTEND ABOVE THE TOP OF THE BASE PLATE.

SEE STANDARD SHEET SCST-02-17 FOR LOCATION OF POST BASE DETAIL.

SEE STANDARD SHEET SCST-08-17 FOR SPREAD FOOTING FOUNDATION DETAILS.

SEE STANDARD SHEET SCST-09-17 FOR DRILLED SHAFT FOUNDATION DETAILS.

04-2020
LATEST REVISION DATE

APPROVED BY BRIDGE ENGINEER

IOWADOT Highway Division

STANDARD DESIGN

STEEL CANTILEVER SIGN TRUSS

JULY, 2017

POST BASE SUPPORT DETAILS | SCST-06-17

04-2020: CHANGED "GALVANIZING VENT HOLE" TO "GALVANIZING HOLE" IN SECTION J-J TO REFLECT HOLE USE AS A GALVANIZING VENT HOLE AND/OR A GALVANIZING DRAIN HOLE. REVISED SECTION J-J POST-TO-BASE-PLATE WELD SYMBOL TO SHOW A STANDARD-SIZED BACKING ELEMENT. CHANGED "FULL-PENETRATION GROOVE WELD" TO "COMPLETE-JOINT-PENETRATION GROOVE WELD" TO CONF TO AWS NOMENCLATURE. ADDED CALLOUT IN ANCHOR BOLT ASSEMBLY DETAIL TO CLARIFY THAT ANCHOR BOLT HOLES IN ANNULAR PLATES HAVE A 3⅛" DIAMETER. CHANGED "3¼"⁵⁄₆₄ HOLES" TO "3¼"⁵⁄₆₄ IN SECTION H-H FOR UNIFORMITY.

STEELCANTILEVERSIGNTRUSS.dgn - SCST-06-17 - THIS SHEET ISSUED 07-2017.