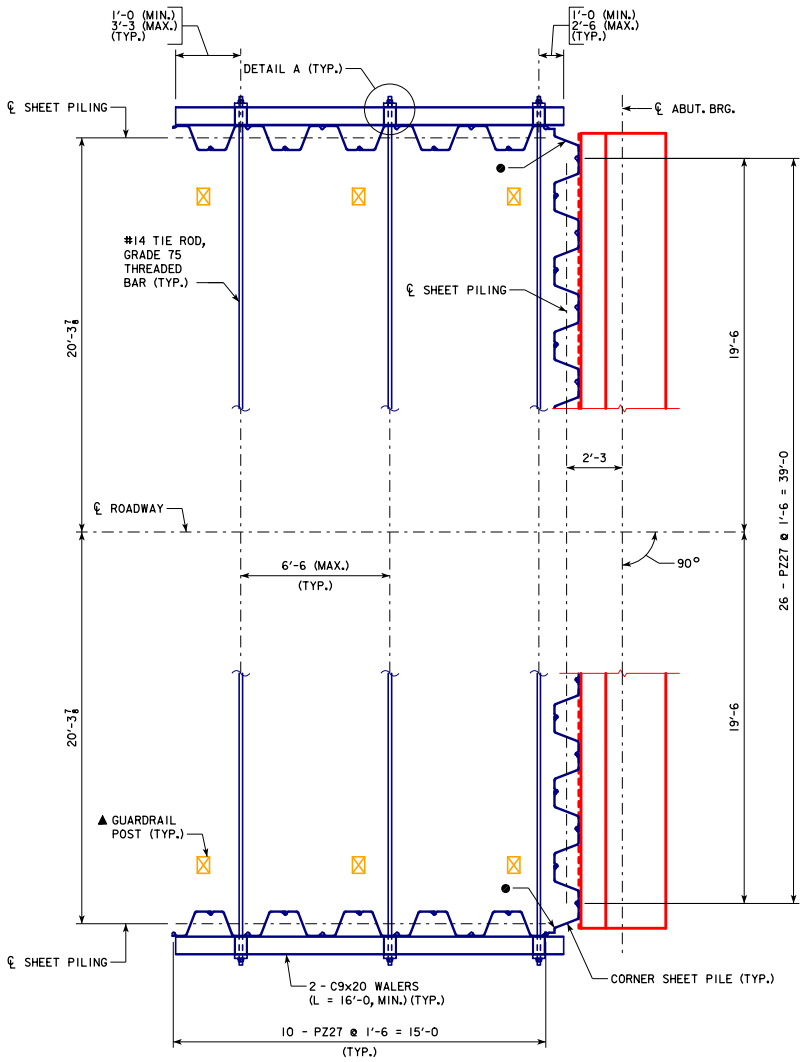

STEEL SHEET PILING PLAN VIEW

(COVER PLATES NOT SHOWN FOR CLARITY.)

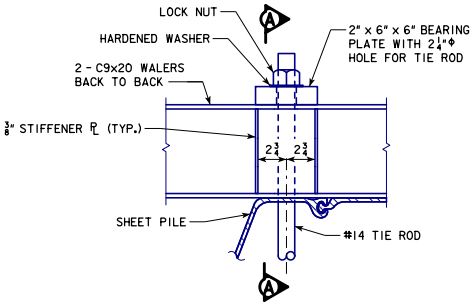

DETAIL A

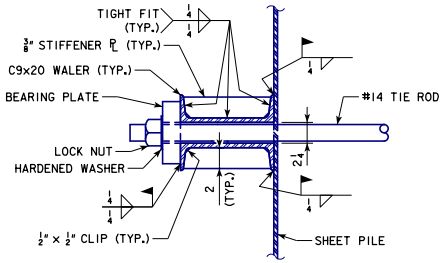

SECTION A-A

STEEL SHEET PILING NOTES:

AS A MINIMUM, ALL STEEL SHEET PILING SHALL BE PZ27 AND SHALL CONFORM TO ASTM A328 STEEL AND SHALL MEET THE FOLLOWING REQUIREMENTS:

SECTION LENGTH	SEE TYPICAL SECTION, SHEET B30-08-16
MAXIMUM SECTION DEPTH	12 IN
MINIMUM SECTION THICKNESS	0.375 IN
ELASTIC SECTION MODULUS	30.2 IN^3/FT

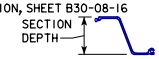

THE CONTRACTOR SHALL SUBMIT FOR REVIEW A SHOP PLAN OF THE SHEET PILE LAYOUT, INCLUDING THE TIES AND WALERS, SHOWING ALL PERTINENT DIMENSIONS, DETAILS, AND SECTION PROPERTIES. THE CONTRACTOR SHALL NOT PROCEED WITH INSTALLATION OF STEEL SHEET PILING AND STEEL BEARING PILING PRIOR TO APPROVAL OF THE SUBMITTAL BY THE ENGINEER.

THE PAY QUANTITY WILL BE BASED ON THE SHEET PILE WALL DIMENSIONS SHOWN.

TIE RODS SHALL BE POSITIONED AND DETAILED TO AVOID CONFLICTS WITH THE GUARDRAIL POSTS.

TIE RODS SHALL BE ASTM A615 GRADE 75 AND GALVANIZED IN ACCORDANCE WITH ASTM A123.

LOCK NUTS AND WASHERS SHALL BE GALVANIZED AND PROVIDED BY THE TIE ROD MANUFACTURER.

STEEL CHANNELS, BEARING PLATES AND OTHER MISCELLANEOUS PLATES SHALL CONFORM TO ASTM A709, GRADE 50.

FIELD WELDING SHALL MEET THE REQUIREMENTS OF MATERIALS I.M. 558.

THE STEEL WALERS SHALL BEAR UNIFORMLY AGAINST THE SHEET PILES PRIOR TO TIGHTENING THE TIE ROD NUTS. 6" x 6" SHIM PLATES SHALL BE USED TO PROVIDE UNIFORM BEARING.

THE COST OF FURNISHING AND INSTALLING THE WALERS, TIE RODS, BEARING PLATES, LOCK NUTS, WASHERS, STIFFENER PLATES, COVER PLATES AND SHIM PLATES SHALL BE INCLUDED IN THE PRICE BID FOR "PILES STEEL SHEET".

NOTES:
- ● TOP OF SHEET PILING AT WINGS TO MATCH TOP OF BACKWALL ELEVATION. FOR SHEET PILE COVER PLATE DETAILS, SEE SHEETS B30-08-16 AND B30-09-16.
- ▲ REFER TO OTHER PLAN SHEETS FOR LOCATION.

LATEST REVISION DATE

APPROVED BY BRIDGE ENGINEER

IOWA DOT Highway Division

STANDARD DESIGN - 30'-0 ROADWAY, SINGLE SPAN

CONCRETE BOX BEAM BRIDGES

DECEMBER, 2016

STEEL SHEET PILING DETAILS
0° SKEW
(SHEET 1 OF 3)

B30-07-16