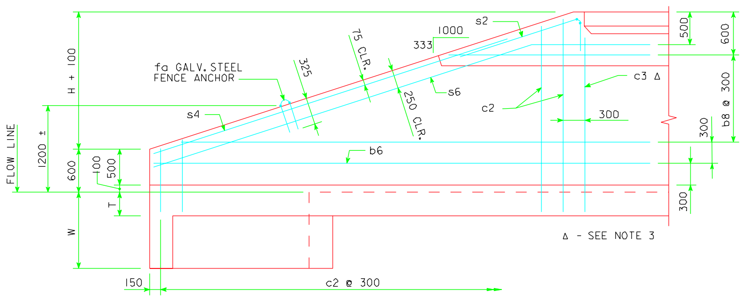

TYPICAL VIEW - FRONT FACE REINFORCING SHORT WINGWALL

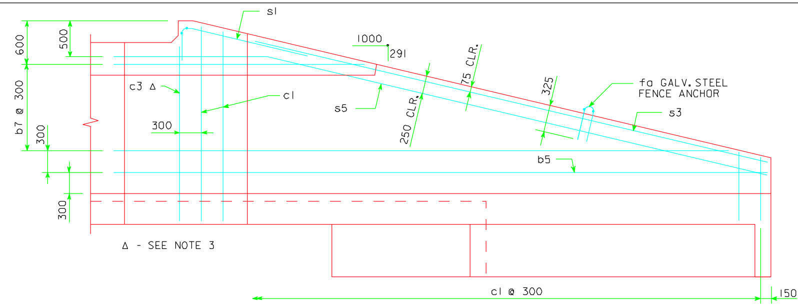

TYPICAL VIEW - FRONT FACE REINFORCING LONG WINGWALL

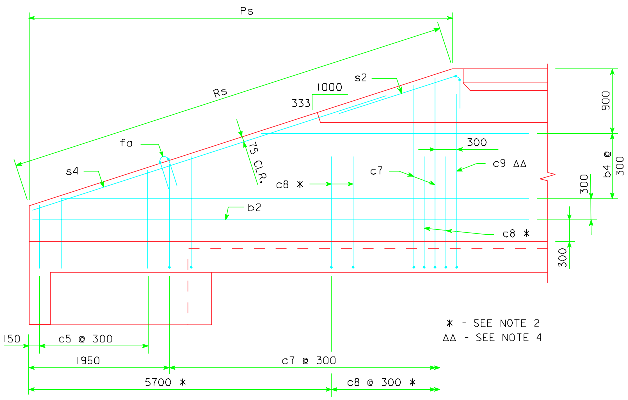

TYPICAL VIEW - BACK FACE REINFORCING SHORT WINGWALL

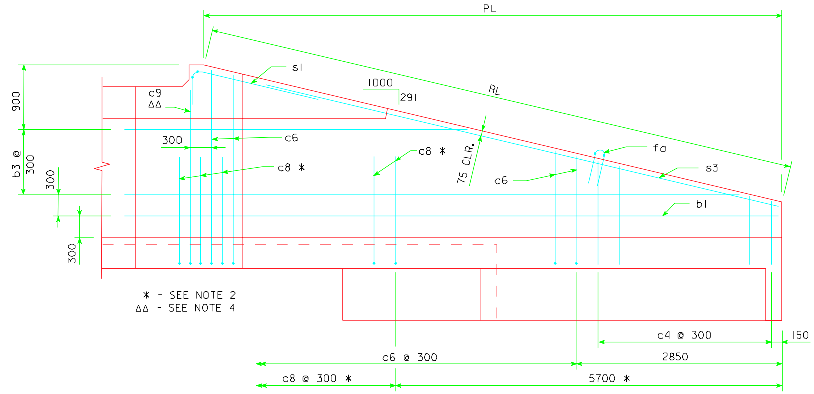

TYPICAL VIEW - BACK FACE REINFORCING LONG WINGWALL

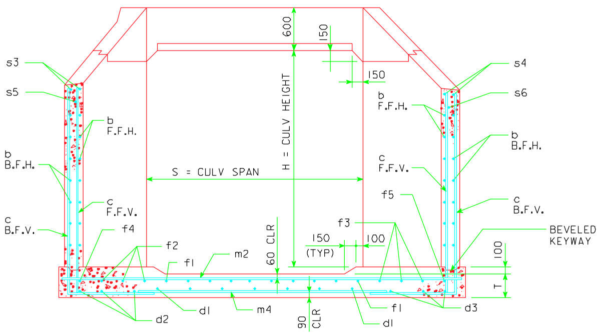

TYPICAL SECTION - NEAR CENTER OF APRON

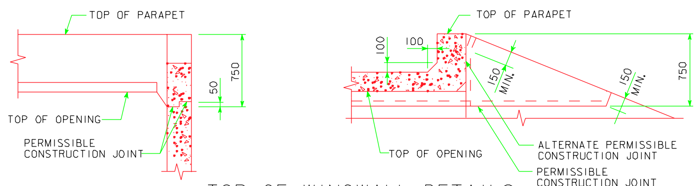

TOP OF WINGWALL DETAILS

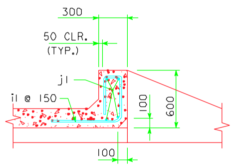

SECTION THRU PARAPET

NOTES:

1. BAR SPACINGS AND POSITIONS SHOWN ARE SIMILAR FOR ALL SIZES OF HEADWALLS IN THIS STANDARD.
2. NOT APPLICABLE TO HEADWALL HEIGHTS OF H=900, H=1200, H=1500, AND H=1800.
3. TWO c3 BARS - LONG WINGWALL, ONE c3 BAR - SHORT WINGWALL.
4. TWO c9 BARS - LONG WINGWALL, ONE c9 BAR - SHORT WINGWALL.
5. FOR DIMENSION TABLE SEE SHEET MFWH 15-6-95.

LATEST REVISION DATE : 1-98

APPROVED BY :

STANDARD DESIGN

FLARED WING HEADWALLS

FOR
REINFORCED CONCRETE BOX CULVERTS

PROJECT DEVELOPMENT DIVISION
IOWA DEPARTMENT OF TRANSPORTATION

JULY, 1995

MFWH 15-8-95

REVISED : 12/96 ; KEYWAY NOTATION CHANGED.
REVISED 1/98; CLEAR DISTANCE TO i1 BAR CHANGED.
FWH158M.S01

XXXXXXXXXXSYSTEMTIME XXXXXXXUSERNAME XXXXXXXXXXXXXXXXXXXXXXXXXXXXXXXXXXXXXXXXXXXXXXXXXXXXXXXXXXXDGNSPEC