BILL OF REINFORCING FOR ONE HEADWALL 0° SKEW CULVERT SPAN x CULVERT HEIGHT

BAR	LOCATION	SHAPE	10' x 9' NO.	10' x 9' LENGTH	10' x 9' WT.	10' x 8' NO.	10' x 8' LENGTH	10' x 8' WT.	10' x 7' NO.	10' x 7' LENGTH	10' x 7' WT.	10' x 6' NO.	10' x 6' LENGTH	10' x 6' WT.	10' x 5' NO.	10' x 5' LENGTH	10' x 5' WT.	10' x 4' NO.	10' x 4' LENGTH	10' x 4' WT.	8' x 10' NO.	8' x 10' LENGTH	8' x 10' WT.	8' x 9' NO.	8' x 9' LENGTH	8' x 9' WT.	8' x 8' NO.	8' x 8' LENGTH	8' x 8' WT.	8' x 7' NO.	8' x 7' LENGTH	8' x 7' WT.	8' x 6' NO.	8' x 6' LENGTH	8' x 6' WT.	8' x 5' NO.	8' x 5' LENGTH	8' x 5' WT.	8' x 4' NO.	8' x 4' LENGTH	8' x 4' WT.	BAR
5fa	FENCE ANCHOR (GALV.)		2	2'-10	6	2	2'-10	6	2	2'-10	6	2	2'-10	6	2	2'-10	6	2	2'-10	6	2	2'-10	6	2	2'-10	6	2	2'-10	6	2	2'-10	6	2	2'-10	6	2	2'-10	6	2	2'-10	6	5fa
4b1	WINGWALL, B.F.H.		2	31'-7	42	2	28'-6	38	2	25'-5	34	2	22'-4	30	2	19'-3	26	2	16'-2	22	2	34'-8	46	2	31'-7	42	2	28'-6	38	2	25'-5	34	2	22'-4	30	2	19'-3	26	2	16'-2	22	4b1
4b2	WINGWALL, B.F.H.		14 VAR.	2 EACH 11'-7 TO 30'-2	195	12 VAR.	2 EACH 11'-7 TO 27'-1	155	10 VAR.	2 EACH 11'-7 TO 24'-0	119	8 VAR.	2 EACH 11'-7 TO 20'-11	87	6 VAR.	2 EACH 11'-7 TO 17'-10	59	4 VAR.	2 EACH 11'-7 TO 14'-9	35	16 VAR.	2 EACH 11'-7 TO 33'-3	240	14 VAR.	2 EACH 11'-7 TO 30'-2	195	12 VAR.	2 EACH 11'-7 TO 27'-1	155	10 VAR.	2 EACH 11'-7 TO 24'-0	119	8 VAR.	2 EACH 11'-7 TO 20'-11	87	6 VAR.	2 EACH 11'-7 TO 17'-10	59	4 VAR.	2 EACH 11'-7 TO 14'-9	35	4b2
5b3	WINGWALL, F.F.H.		2	31'-8	66	2	28'-7	60	2	25'-5	53	2	22'-4	47	2	19'-3	40	2	16'-2	34	2	34'-9	72	2	31'-8	66	2	28'-7	60	2	25'-5	53	2	22'-4	47	2	19'-3	40	2	16'-2	34	5b3
5b4	WINGWALL, F.F.H.		16 VAR.	2 EACH 8'-7 TO 30'-3	324	14 VAR.	2 EACH 8'-7 TO 27'-2	261	12 VAR.	2 EACH 8'-7 TO 24'-0	204	10 VAR.	2 EACH 8'-7 TO 20'-11	154	8 VAR.	2 EACH 8'-7 TO 17'-10	110	6 VAR.	2 EACH 8'-7 TO 14'-9	73	18 VAR.	2 EACH 8'-7 TO 33'-4	393	16 VAR.	2 EACH 8'-7 TO 30'-3	324	14 VAR.	2 EACH 8'-7 TO 27'-2	261	12 VAR.	2 EACH 8'-7 TO 24'-0	204	10 VAR.	2 EACH 8'-7 TO 20'-11	154	8 VAR.	2 EACH 8'-7 TO 17'-10	110	6 VAR.	2 EACH 8'-7 TO 14'-9	73	5b4
5b5	INTERIOR WALL, BOTH F.H.		15 VAR.	4'-11 TO 21'-3	205	13 VAR.	5'-0 TO 19'-3	164	11 VAR.	5'-1 TO 17'-3	128	9 VAR.	5'-1 TO 15'-3	95	7 VAR.	5'-3 TO 13'-3	68	5 VAR.	5'-5 TO 11'-2	43	17 VAR.	4'-11 TO 23'-3	250	15 VAR.	4'-11 TO 21'-3	205	13 VAR.	5'-0 TO 19'-3	164	11 VAR.	5'-1 TO 17'-3	128	9 VAR.	5'-1 TO 15'-3	95	7 VAR.	5'-3 TO 13'-3	68	5 VAR.	5'-5 TO 11'-2	43	5b5
4c1	WINGWALL, F.F.V.		58 VAR.	2 EACH 2'-9 TO 11'-10	283	52 VAR.	2 EACH 2'-9 TO 10'-10	236	46 VAR.	2 EACH 2'-9 TO 9'-11	195	40 VAR.	2 EACH 2'-9 TO 8'-11	156	32 VAR.	2 EACH 2'-9 TO 7'-8	111	26 VAR.	2 EACH 2'-9 TO 6'-8	82	64 VAR.	2 EACH 2'-8 TO 12'-9	330	58 VAR.	2 EACH 2'-8 TO 11'-9	279	52 VAR.	2 EACH 2'-8 TO 10'-9	233	46 VAR.	2 EACH 2'-8 TO 9'-10	192	40 VAR.	2 EACH 2'-8 TO 8'-10	154	32 VAR.	2 EACH 2'-8 TO 7'-7	110	26 VAR.	2 EACH 2'-8 TO 6'-7	80	4c1
4c2	WINGWALL, F.F.V.		18 VAR.	2 EACH 9'-5 TO 12'-0	129	---	---	---	---	---	---	---	---	---	---	---	---	---	---	---	24 VAR.	2 EACH 9'-4 TO 12'-11	178	18 VAR.	2 EACH 9'-4 TO 11'-11	128	---	---	---	---	---	---	---	---	---	---	---	---	---	---	---	---	4c2
4c3	WINGWALL, F.F.V.		2	10'-8	14	2	9'-8	13	2	8'-8	12	2	7'-8	10	4	6'-8	18	4	5'-8	15	2	11'-7	15	2	10'-7	14	2	9'-7	13	2	8'-7	11	2	7'-7	10	4	6'-7	18	4	5'-7	15	4c3
4c4	INTERIOR WALL, BOTH F.V.		2	1'-8	2	2	1'-8	2	2	1'-8	2	2	1'-8	2	2	1'-8	2	2	1'-7	2	2	1'-7	2	2	1'-7	2	2	1'-7	2	2	1'-7	2	2	1'-7	2	2	1'-7	2	2	1'-6	2	4c4
4c5	INTERIOR WALL, BOTH F.V.		38 VAR.	1'-10 TO 9'-10	148	34 VAR.	1'-10 TO 8'-10	121	30 VAR.	1'-10 TO 7'-9	96	26 VAR.	1'-10 TO 6'-9	75	22 VAR.	1'-10 TO 5'-9	56	18 VAR.	1'-10 TO 4'-9	40	42 VAR.	1'-10 TO 10'-9	177	38 VAR.	1'-9 TO 9'-9	146	34 VAR.	1'-9 TO 8'-9	119	30 VAR.	1'-9 TO 7'-8	94	26 VAR.	1'-9 TO 6'-8	73	22 VAR.	1'-9 TO 5'-8	54	18 VAR.	1'-9 TO 4'-8	39	4c5
5c6	WINGWALL, B.F.V.		12 VAR.	2 EACH 2'-9 TO 4'-5	45	12 VAR.	2 EACH 2'-9 TO 4'-5	45	12 VAR.	2 EACH 2'-9 TO 4'-5	45	12 VAR.	2 EACH 2'-9 TO 4'-5	45	12 VAR.	2 EACH 2'-9 TO 4'-5	45	12 VAR.	2 EACH 2'-9 TO 4'-5	45	12 VAR.	2 EACH 2'-8 TO 4'-4	44	12 VAR.	2 EACH 2'-8 TO 4'-4	44	12 VAR.	2 EACH 2'-8 TO 4'-4	44	12 VAR.	2 EACH 2'-8 TO 4'-4	44	12 VAR.	2 EACH 2'-8 TO 4'-4	44	12 VAR.	2 EACH 2'-8 TO 4'-4	44	12 VAR.	2 EACH 2'-8 TO 4'-4	44	5c6
5c7	WINGWALL, B.F.V.		46 VAR.	2 EACH 8'-9 TO 15'-10	590	40 VAR.	2 EACH 8'-9 TO 14'-10	492	34 VAR.	2 EACH 8'-9 TO 13'-11	402	28 VAR.	2 EACH 8'-9 TO 12'-11	316	20 VAR.	2 EACH 8'-9 TO 11'-8	213	14 VAR.	2 EACH 8'-9 TO 10'-8	142	52 VAR.	2 EACH 8'-8 TO 16'-9	689	46 VAR.	2 EACH 8'-8 TO 15'-9	586	40 VAR.	2 EACH 8'-8 TO 14'-9	488	34 VAR.	2 EACH 8'-8 TO 13'-10	399	28 VAR.	2 EACH 8'-8 TO 12'-10	314	20 VAR.	2 EACH 8'-8 TO 11'-7	211	14 VAR.	2 EACH 8'-8 TO 10'-7	141	5c7
5c8	WINGWALL, B.F.V.		32	10'-6	350	26	10'-6	285	20	10'-6	219	14	10'-6	153	---	---	---	---	---	---	38	10'-6	416	32	10'-6	350	26	10'-6	285	20	10'-6	219	14	10'-6	153	---	---	---	---	---	---	5c8
5c9	WINGWALL, B.F.V.		2	14'-8	31	2	13'-8	29	2	12'-8	26	2	11'-8	24	4	10'-8	45	4	9'-8	40	2	15'-7	33	2	14'-7	30	2	13'-7	28	2	12'-7	26	2	11'-7	24	4	10'-7	44	4	9'-7	40	5c9
4d1	APRON, LONGIT., BOTT.		13	21'-6	187	13	19'-6	169	13	17'-6	152	13	15'-6	135	13	13'-6	117	13	11'-6	100	11	23'-6	173	11	21'-6	158	11	19'-6	143	11	17'-6	129	11	15'-6	114	11	13'-6	99	11	11'-6	85	4d1
4d2	APRON, LONGIT., BOTT.		6	26'-7	107	6	23'-6	94	6	20'-6	82	6	17'-5	70	6	14'-5	58	6	11'-6	46	6	29'-8	119	6	26'-7	107	6	23'-6	94	6	20'-6	82	6	17'-5	70	6	14'-5	58	6	11'-6	46	4d2
6f1	APRON, LONGIT., TOP		20	21'-6	646	20	19'-6	586	20	17'-6	526	20	15'-6	466	20	13'-6	406	20	11'-6	345	16	23'-6	565	16	21'-6	517	16	19'-6	469	16	17'-6	421	16	15'-6	372	16	13'-6	324	16	11'-6	276	6f1
6f2	APRON, LONGIT., TOP		12 VAR.	2 EACH 5'-3 TO 18'-10	217	10 VAR.	2 EACH 5'-11 TO 16'-10	171	10 VAR.	2 EACH 3'-11 TO 14'-10	141	8 VAR.	2 EACH 4'-7 TO 12'-10	105	6 VAR.	2 EACH 5'-4 TO 10'-10	73	4 VAR.	2 EACH 6'-1 TO 8'-10	45	14 VAR.	2 EACH 4'-6 TO 20'-10	266	12 VAR.	2 EACH 5'-3 TO 18'-10	217	10 VAR.	2 EACH 5'-11 TO 16'-10	171	10 VAR.	2 EACH 3'-11 TO 14'-10	141	8 VAR.	2 EACH 4'-7 TO 12'-10	105	6 VAR.	2 EACH 5'-4 TO 10'-10	73	4 VAR.	2 EACH 6'-1 TO 8'-10	45	6f2
6f3	APRON, LONGIT., TOP		2	31'-8	95	2	28'-7	86	2	25'-5	76	2	22'-4	67	2	19'-3	58	2	16'-2	49	2	34'-9	104	2	31'-8	95	2	28'-7	86	2	25'-5	76	2	22'-4	67	2	19'-3	58	2	16'-2	49	6f3
4l1	PARAPET, VERTICAL		41	6'-1	167	41	6'-1	167	41	6'-1	167	41	6'-1	167	41	6'-1	167	41	6'-1	167	33	6'-1	134	33	6'-1	134	33	6'-1	134	33	6'-1	134	33	6'-1	134	33	6'-1	134	33	6'-1	134	4l1
7j1	PARAPET, HORIZONTAL		4	22'-2	181	4	22'-2	181	4	21'-11	179	4	21'-11	179	4	21'-11	179	4	21'-11	179	4	18'-2	149	4	18'-2	149	4	18'-2	149	4	17'-11	146	4	17'-11	146	4	17'-11	146	4	17'-11	146	7j1
6m1	APRON, TRANS., TOP		26 VAR.	22'-4 TO 31'-9	1056	23 VAR.	22'-4 TO 30'-7	914	21 VAR.	22'-1 TO 29'-7	815	18 VAR.	22'-1 TO 28'-6	684	15 VAR.	22'-1 TO 27'-4	557	13 VAR.	22'-1 TO 26'-7	475	29 VAR.	18'-4 TO 28'-10	1027	26 VAR.	18'-4 TO 27'-9	900	23 VAR.	18'-4 TO 26'-7	776	21 VAR.	18'-1 TO 25'-7	689	18 VAR.	18'-1 TO 24'-6	576	15 VAR.	18'-1 TO 23'-4	467	13 VAR.	18'-1 TO 22'-7	397	6m1
6m2	APRON, TRANS., BOTT.		18 VAR.	16'-7 TO 25'-1	563	16 VAR.	16'-7 TO 24'-1	489	14 VAR.	16'-6 TO 23'-0	415	12 VAR.	16'-6 TO 22'-0	347	10 VAR.	16'-6 TO 21'-0	282	8 VAR.	16'-6 TO 20'-0	219	20 VAR.	12'-7 TO 22'-1	521	18 VAR.	12'-7 TO 21'-1	455	16 VAR.	12'-7 TO 20'-1	393	14 VAR.	12'-6 TO 19'-0	331	12 VAR.	12'-6 TO 18'-0	275	10 VAR.	12'-6 TO 17'-0	222	8 VAR.	12'-6 TO 16'-0	171	6m2
6p1	CURTAIN, HORIZONTAL		4	21'-1	127	4	21'-1	127	4	21'-0	126	4	21'-0	126	4	21'-0	126	4	21'-0	126	4	17'-1	103	4	17'-1	103	4	17'-1	103	4	17'-0	102	4	17'-0	102	4	17'-0	102	4	17'-0	102	6p1
6p2	CURTAIN, HORIZONTAL		8	14'-10	178	8	13'-7	163	8	12'-4	148	8	11'-1	133	8	9'-10	118	8	8'-7	103	8	16'-1	193	8	14'-10	178	8	13'-7	163	8	12'-4	148	8	11'-1	133	8	9'-10	118	8	8'-7	103	6p2
6s1	WING SLOPE, BOTH F.		4	7'-8	46	4	7'-8	46	4	7'-8	46	4	7'-8	46	4	7'-8	46	4	7'-8	46	4	7'-8	46	4	7'-8	46	4	7'-8	46	4	7'-8	46	4	7'-8	46	4	7'-8	46	4	7'-8	46	6s1
6s2	WING SLOPE, BOTH F.		4	27'-9	167	4	24'-6	147	4	21'-3	128	4	18'-0	108	4	14'-9	89	4	11'-6	69	4	31'-0	186	4	27'-9	167	4	24'-6	147	4	21'-3	128	4	18'-0	108	4	14'-9	89	4	11'-6	69	6s2
6s3	WING SLOPE, F.F.		2	33'-0	99	2	29'-9	89	2	26'-6	80	2	23'-3	70	2	20'-0	60	2	16'-9	50	2	36'-3	109	2	33'-0	99	2	29'-9	89	2	26'-6	80	2	23'-3	70	2	20'-0	60	2	16'-9	50	6s3
6s4	INTERIOR WALL, BOTH F.		2	23'-1	69	2	20'-11	63	2	18'-8	56	2	16'-5	49	2	14'-2	43	2	11'-11	36	2	25'-4	76	2	23'-1	69	2	20'-11	63	2	18'-8	56	2	16'-5	49	2	14'-2	43	2	11'-11	36	6s4
5t1	CURTAIN, VERTICAL		33	7'-3	250	31	7'-0	226	29	6'-9	204	27	6'-6	183	25	6'-6	169	23	6'-6	156	31	7'-6	242	29	7'-3	219	27	7'-0	197	25	6'-9	176	23	6'-6	156	21	6'-6	142	19	6'-6	129	5t1
ESTIMATED QUANTITIES ONE HEADWALL	REINF. STEEL		6585 LB			5625 LB			4882 LB			4135 LB			3347 LB			2790 LB		6904 LB			6030 LB			5119 LB			4416 LB			3716 LB			2973 LB			2458 LB		
	CONCRETE	PARAPET Δ	2.3			2.3			2.2			2.2			2.2			2.2			2.0			2.0			2.0			1.9			1.9			1.9			1.9		
		WINGWALLS	14.0	50.6 CY		11.4	42.8 CY		8.1	34.7 CY		6.2	29.9 CY		4.5	25.0 CY		3.1	20.4 CY		16.9	53.7 CY		14.0	45.1 CY		11.4	37.9 CY		8.1	30.5 CY		6.2	26.1 CY		4.5	21.6 CY		3.1	17.6 CY	
		FOOTING *	34.3			29.1			24.4			21.5			18.3			15.1			34.8			29.1			24.5			20.5			18.0			15.2			12.6		

Δ INCLUDES TOP OF WINGWALL QUANTITIES.
* ASSUMES APRON AND FLOOR ARE EQUAL THICKNESS, ADJUST CONCRETE QUANTITIES FOR TRANSITION WHERE APRON AND FLOOR THICKNESS ARE NOT EQUAL.

NOTE:
WEIGHT OF BARS OVER 40'-0 LONG INCLUDES AN ALLOWANCE OF 2'-3 FOR LAP.
LENGTHS SHOWN FOR BARS OVER 40'-0 LONG DO NOT INCLUDE LAP.

BENT BAR DETAILS

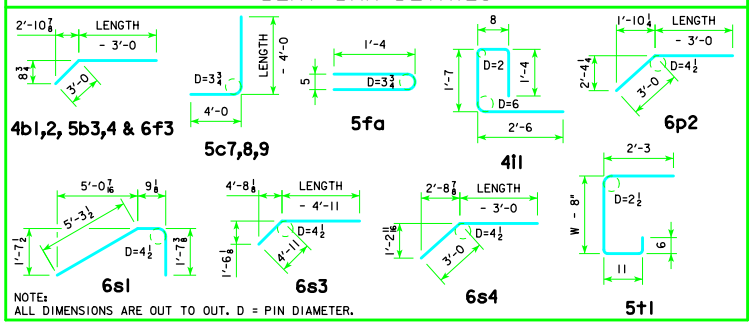

NOTE:
ALL DIMENSIONS ARE OUT TO OUT. D = PIN DIAMETER.

HEADWALL NOTES:

1. SEE DRAWING TWRCB GI-12 FOR GENERAL INFORMATION, SPECIFICATIONS, AND DESIGN STRESSES.
2. THIS HEADWALL IS BASED ON A 3:1 SLOPE NORMAL TO CENTERLINE OF ROADWAY.
3. THE SIDES OF THE FOOTING ARE TO BE FORMED TO INSURE CORRECT LINE AND GRADE.
4. ALL SLAB AND FLOOR REINFORCING STEEL IS TO BE SUPPORTED BY BAR CHAIRS AT INTERVALS OF NOT MORE THAN 3'-0 IN EITHER DIRECTION AS OUTLINED IN THE STANDARD SPECIFICATIONS.
5. CLEAR DISTANCE FROM FACE OF CONCRETE TO NEAR REINFORCING BAR IS TO BE 2" UNLESS OTHERWISE NOTED OR SHOWN. CLEARANCE TO THE BOTTOM ENDS OF VERTICAL BARS SHALL BE 3 INCHES.
6. CONCRETE QUANTITIES ARE ESTIMATED FROM BACK OF PARAPET.
7. HORIZONTAL TAILS OF BARS "b" & "s" ESTIMATED TO EXTEND 2'-0 BEYOND BACK OF PARAPET (INTO END OF BARREL). LONGITUDINAL BARS "d", "6f1", AND "6f3" ESTIMATED TO PROJECT INTO END SECTION OF BARREL A MINIMUM OF 2'-0 BEYOND BACK OF PARAPET.
8. THE "LENGTH" COLUMN REFLECTS TOTAL NUMBER OF FEET NECESSARY TO MEET THESE REQUIREMENTS.

LATEST REVISION DATE

APPROVED BY BRIDGE ENGINEER

Iowa Department of Transportation
Highway Division

STANDARD DESIGN

TWIN REINFORCED CONCRETE BOX CULVERTS

APRIL, 2012

FLARED WING HEADWALLS

0° SKEW

TWH 0-5-12

ENGLISHLRFDSIGNEDTWINCULVERTS.DGN - TWH 0-5-12 - THIS SHEET ISSUED 04-12.