BILL OF REINFORCING FOR ONE HEADWALL 0° SKEW CULVERT SPAN x CULVERT HEIGHT

BAR	LOCATION	SHAPE	12' x 12'			12' x 11'			12' x 10'			12' x 9'			12' x 8'			12' x 7'			12' x 6'			12' x 5'			12' x 4'			10' x 12'			10' x 11'			10' x 10'			BAR
			NO.	LENGTH	WT.	NO.	LENGTH	WT.	NO.	LENGTH	WT.	NO.	LENGTH	WT.	NO.	LENGTH	WT.	NO.	LENGTH	WT.	NO.	LENGTH	WT.	NO.	LENGTH	WT.	NO.	LENGTH	WT.	NO.	LENGTH	WT.	NO.	LENGTH	WT.	NO.	LENGTH	WT.	
5fa	FENCE ANCHOR (GALV.)		2	2'-10	6	2	2'-10	6	2	2'-10	6	2	2'-10	6	2	2'-10	6	2	2'-10	6	2	2'-10	6	2	2'-10	6	2	2'-10	6	2	2'-10	6	2	2'-10	6	2	2'-10	6	5fa
4b1	WINGWALL, B.F.H.		2	40'-10	58	2	37'-9	50	2	34'-8	46	2	31'-7	42	2	28'-6	38	2	25'-5	34	2	22'-4	30	2	19'-3	26	2	16'-2	22	2	40'-10	58	2	37'-9	50	2	34'-8	46	4b1
4b2	WINGWALL, B.F.H.		20 VAR.	2 EACH 11'-7 TO 39'-5	341	18 VAR.	2 EACH 11'-7 TO 36'-4	288	16 VAR.	2 EACH 11'-7 TO 33'-3	240	14 VAR.	2 EACH 11'-7 TO 30'-2	195	12 VAR.	2 EACH 11'-7 TO 27'-1	155	10 VAR.	2 EACH 11'-7 TO 24'-0	119	8 VAR.	2 EACH 11'-7 TO 20'-11	87	6 VAR.	2 EACH 11'-7 TO 17'-10	59	4 VAR.	2 EACH 11'-7 TO 14'-9	35	20 VAR.	2 EACH 11'-7 TO 39'-5	341	18 VAR.	2 EACH 11'-7 TO 36'-4	288	16 VAR.	2 EACH 11'-7 TO 33'-3	240	4b2
5b3	WINGWALL, F.F.H.		2	40'-11	90	2	37'-10	79	2	34'-9	72	2	31'-8	66	2	28'-7	60	2	25'-5	53	2	22'-4	47	2	19'-3	40	2	16'-2	34	2	40'-11	90	2	37'-10	79	2	34'-9	72	5b3
5b4	WINGWALL, F.F.H.		22 VAR.	2 EACH 8'-6 TO 39'-6	551	20 VAR.	2 EACH 8'-6 TO 36'-5	468	18 VAR.	2 EACH 8'-7 TO 33'-4	393	16 VAR.	2 EACH 8'-7 TO 30'-3	324	14 VAR.	2 EACH 8'-7 TO 27'-2	261	12 VAR.	2 EACH 8'-7 TO 24'-0	204	10 VAR.	2 EACH 8'-7 TO 20'-11	154	8 VAR.	2 EACH 8'-7 TO 17'-10	110	6 VAR.	2 EACH 8'-7 TO 14'-9	73	22 VAR.	2 EACH 8'-6 TO 39'-6	551	20 VAR.	2 EACH 8'-6 TO 36'-5	468	18 VAR.	2 EACH 8'-7 TO 33'-4	393	5b4
5b5	INTERIOR WALL, BOTH F.H.		21 VAR.	4'-10 TO 27'-4	352	19 VAR.	4'-11 TO 25'-4	300	17 VAR.	4'-11 TO 23'-3	250	15 VAR.	4'-11 TO 21'-3	205	13 VAR.	5'-0 TO 19'-3	164	11 VAR.	5'-1 TO 17'-3	128	9 VAR.	5'-1 TO 15'-3	95	7 VAR.	5'-3 TO 13'-3	68	5 VAR.	5'-5 TO 11'-2	43	21 VAR.	4'-10 TO 27'-4	352	19 VAR.	4'-11 TO 25'-4	300	17 VAR.	4'-11 TO 23'-3	250	5b5
4c1	WINGWALL, F.F.V.		76 VAR.	2 EACH 2'-10 TO 14'-10	448	70 VAR.	2 EACH 2'-10 TO 13'-10	390	64 VAR.	2 EACH 2'-10 TO 12'-11	337	58 VAR.	2 EACH 2'-10 TO 11'-11	286	52 VAR.	2 EACH 2'-10 TO 10'-11	239	46 VAR.	2 EACH 2'-10 TO 10'-0	197	40 VAR.	2 EACH 2'-10 TO 9'-0	158	32 VAR.	2 EACH 2'-10 TO 7'-9	113	26 VAR.	2 EACH 2'-10 TO 6'-9	83	76 VAR.	2 EACH 2'-9 TO 14'-9	444	70 VAR.	2 EACH 2'-9 TO 13'-9	386	64 VAR.	2 EACH 2'-9 TO 12'-10	333	4c1
4c2	WINGWALL, F.F.V.		36 VAR.	2 EACH 9'-6 TO 15'-0	295	30 VAR.	2 EACH 9'-6 TO 14'-0	235	24 VAR.	2 EACH 9'-6 TO 13'-1	181	18 VAR.	2 EACH 9'-6 TO 12'-1	130	---	---	---	---	---	---	---	---	---	---	---	---	---	---	---	36 VAR.	2 EACH 9'-5 TO 14'-11	293	30 VAR.	2 EACH 9'-5 TO 13'-11	234	24 VAR.	2 EACH 9'-5 TO 13'-0	180	4c2
4c3	WINGWALL, F.F.V.		4	13'-9	37	4	12'-9	34	2	11'-9	16	2	10'-9	14	2	9'-9	13	2	8'-9	12	2	7'-9	10	4	6'-9	18	4	5'-9	15	4	13'-8	37	4	12'-8	34	2	11'-8	16	4c3
4c4	INTERIOR WALL, BOTH F.V.		2	1'-9	2	2	1'-9	2	2	1'-9	2	2	1'-9	2	2	1'-9	2	2	1'-9	2	2	1'-9	2	2	1'-9	2	2	1'-8	2	2	1'-8	2	2	1'-8	2	2	1'-8	2	4c4
4c5	INTERIOR WALL, BOTH F.V.		50 VAR.	2'-0 TO 12'-11	249	46 VAR.	2'-0 TO 11'-11	214	42 VAR.	2'-0 TO 10'-11	181	38 VAR.	1'-11 TO 9'-11	150	34 VAR.	1'-11 TO 8'-11	123	30 VAR.	1'-11 TO 7'-10	98	26 VAR.	1'-11 TO 6'-10	76	22 VAR.	1'-11 TO 5'-10	57	18 VAR.	1'-11 TO 4'-10	41	50 VAR.	1'-11 TO 12'-10	246	46 VAR.	1'-11 TO 11'-10	211	42 VAR.	1'-11 TO 10'-10	179	4c5
5c6	WINGWALL, B.F.V.		12 VAR.	2 EACH 2'-10 TO 4'-6	46	12 VAR.	2 EACH 2'-10 TO 4'-6	46	12 VAR.	2 EACH 2'-10 TO 4'-6	46	12 VAR.	2 EACH 2'-10 TO 4'-6	46	12 VAR.	2 EACH 2'-10 TO 4'-6	46	12 VAR.	2 EACH 2'-10 TO 4'-6	46	12 VAR.	2 EACH 2'-10 TO 4'-6	46	12 VAR.	2 EACH 2'-10 TO 4'-6	46	12 VAR.	2 EACH 2'-10 TO 4'-6	46	12 VAR.	2 EACH 2'-9 TO 4'-5	45	12 VAR.	2 EACH 2'-9 TO 4'-5	45	12 VAR.	2 EACH 2'-9 TO 4'-5	45	5c6
5c7	WINGWALL, B.F.V.		64 VAR.	2 EACH 8'-10 TO 18'-10	923	58 VAR.	2 EACH 8'-10 TO 17'-10	807	52 VAR.	2 EACH 8'-10 TO 16'-11	698	46 VAR.	2 EACH 8'-10 TO 15'-11	594	40 VAR.	2 EACH 8'-10 TO 14'-11	495	34 VAR.	2 EACH 8'-10 TO 14'-0	405	28 VAR.	2 EACH 8'-10 TO 13'-0	319	20 VAR.	2 EACH 8'-10 TO 11'-9	215	14 VAR.	2 EACH 8'-10 TO 10'-9	143	64 VAR.	2 EACH 8'-9 TO 18'-9	918	58 VAR.	2 EACH 8'-9 TO 17'-9	802	52 VAR.	2 EACH 8'-9 TO 16'-10	694	5c7
5c8	WINGWALL, B.F.V.		50	10'-6	548	44	10'-6	482	38	10'-6	416	32	10'-6	350	26	10'-6	285	20	10'-6	219	14	10'-6	153	---	---	---	---	---	---	50	10'-6	548	44	10'-6	482	38	10'-6	416	5c8
5c9	WINGWALL, B.F.V.		4	17'-9	74	4	16'-9	70	2	15'-9	33	2	14'-9	31	2	13'-9	29	2	12'-9	27	2	11'-9	25	4	10'-9	45	4	9'-9	41	4	17'-8	74	4	16'-8	70	2	15'-8	33	5c9
4d1	APRON, LONGIT., BOTT.		17	27'-6	312	17	25'-6	290	17	23'-6	267	17	21'-6	244	17	19'-6	221	17	17'-6	199	17	15'-6	176	17	13'-6	153	17	11'-6	131	15	27'-6	276	13	25'-6	221	13	23'-6	204	4d1
4d2	APRON, LONGIT., BOTT.		6	35'-9	143	6	32'-8	131	6	29'-8	119	6	26'-7	107	6	23'-6	94	6	20'-6	82	6	17'-5	70	6	14'-5	58	6	11'-6	46	6	35'-9	143	6	32'-8	131	6	29'-8	119	4d2
6f1	APRON, LONGIT., TOP		24	27'-6	991	24	25'-6	919	24	23'-6	847	24	21'-6	775	24	19'-6	703	24	17'-6	631	24	15'-6	559	24	13'-6	487	24	11'-6	415	20	27'-6	826	20	25'-6	766	20	23'-6	706	6f1
6f2	APRON, LONGIT., TOP		16 VAR.	2 EACH 5'-10 TO 24'-10	368	16 VAR.	2 EACH 3'-10 TO 22'-10	320	14 VAR.	2 EACH 4'-6 TO 20'-10	266	12 VAR.	2 EACH 5'-3 TO 18'-10	217	10 VAR.	2 EACH 5'-11 TO 16'-10	171	10 VAR.	2 EACH 3'-11 TO 14'-10	141	8 VAR.	2 EACH 4'-7 TO 12'-10	105	6 VAR.	2 EACH 5'-4 TO 10'-10	73	4 VAR.	2 EACH 6'-1 TO 8'-10	45	16 VAR.	2 EACH 5'-10 TO 24'-10	368	16 VAR.	2 EACH 3'-10 TO 22'-10	320	14 VAR.	2 EACH 4'-6 TO 20'-10	266	6f2
6f3	APRON, LONGIT., TOP		2	40'-11	130	2	37'-10	114	2	34'-9	104	2	31'-8	95	2	28'-7	86	2	25'-5	76	2	22'-4	67	2	19'-3	58	2	16'-2	49	2	40'-11	130	2	37'-10	114	2	34'-9	104	6f3
4l1	PARAPET, VERTICAL		51	6'-1	207	49	6'-1	199	49	6'-1	199	49	6'-1	199	49	6'-1	199	49	6'-1	199	49	6'-1	199	49	6'-1	199	49	6'-1	199	43	6'-1	175	41	6'-1	167	41	6'-1	167	4l1
7j1	PARAPET, HORIZONTAL		4	26'-8	218	4	26'-5	216	4	26'-2	214	4	26'-2	214	4	26'-2	214	4	25'-11	212	4	25'-11	212	4	25'-11	212	4	25'-11	212	4	22'-8	185	4	22'-5	183	4	22'-2	181	7j1
6m1	APRON, TRANS., TOP		34 VAR.	26'-10 TO 39'-3	1687	31 VAR.	26'-7 TO 37'-10	1500	29 VAR.	26'-4 TO 36'-10	1376	26 VAR.	26'-4 TO 35'-9	1212	23 VAR.	26'-4 TO 34'-7	1052	21 VAR.	26'-1 TO 33'-7	941	18 VAR.	26'-1 TO 32'-6	792	15 VAR.	26'-1 TO 31'-4	647	13 VAR.	26'-1 TO 30'-7	553	34 VAR.	22'-10 TO 35'-3	1483	31 VAR.	22'-7 TO 33'-10	1313	29 VAR.	22'-4 TO 32'-10	1201	6m1
6m2	APRON, TRANS., BOTT.		24 VAR.	20'-9 TO 32'-3	955	22 VAR.	20'-8 TO 31'-2	856	20 VAR.	20'-7 TO 30'-1	761	18 VAR.	20'-7 TO 29'-1	671	16 VAR.	20'-7 TO 28'-1	585	14 VAR.	20'-6 TO 27'-0	499	12 VAR.	20'-6 TO 26'-0	419	10 VAR.	20'-6 TO 25'-0	342	8 VAR.	20'-6 TO 24'-0	267	24 VAR.	16'-9 TO 28'-3	811	22 VAR.	16'-8 TO 27'-2	724	20 VAR.	16'-7 TO 26'-1	641	6m2
6p1	CURTAIN, HORIZONTAL		4	25'-3	152	4	25'-2	151	4	25'-1	151	4	25'-1	151	4	25'-1	151	4	25'-0	150	4	25'-0	150	4	25'-0	150	4	25'-0	150	4	21'-3	128	4	21'-2	127	4	21'-1	127	6p1
6p2	CURTAIN, HORIZONTAL		8	18'-7	223	8	17'-4	208	8	16'-1	193	8	14'-10	178	8	13'-7	163	8	12'-4	148	8	11'-1	133	8	9'-10	118	8	8'-7	103	8	18'-7	223	8	17'-4	208	8	16'-1	193	6p2
6s1	WING SLOPE, BOTH F.		4	7'-8	46	4	7'-8	46	4	7'-8	46	4	7'-8	46	4	7'-8	46	4	7'-8	46	4	7'-8	46	4	7'-8	46	4	7'-8	46	4	7'-8	46	4	7'-8	46	4	7'-8	46	6s1
6s2	WING SLOPE, BOTH F.		4	37'-6	225	4	34'-3	206	4	31'-0	186	4	27'-9	167	4	24'-6	147	4	21'-3	128	4	18'-0	108	4	14'-9	89	4	11'-6	69	4	37'-6	225	4	34'-3	206	4	31'-0	186	6s2
6s3	WING SLOPE, F.F.		2	42'-9	135	2	39'-6	119	2	36'-3	109	2	33'-0	99	2	29'-9	89	2	26'-6	80	2	23'-3	70	2	20'-0	60	2	16'-9	50	2	42'-9	135	2	39'-6	119	2	36'-3	109	6s3
6s4	INTERIOR WALL, BOTH F.		2	29'-10	90	2	27'-7	83	2	25'-4	76	2	23'-1	69	2	20'-11	63	2	18'-8	56	2	16'-5	49	2	14'-2	43	2	11'-11	36	2	29'-10	90	2	27'-7	83	2	25'-4	76	6s4
5t1	CURTAIN, VERTICAL		41	8'-0	342	39	7'-9	315	37	7'-6	289	35	7'-3	265	33	7'-0	241	31	6'-9	218	29	6'-6	197	27	6'-6	183	25	6'-6	169	39	8'-0	325	37	7'-9	299	35	7'-6	274	5t1
ESTIMATED QUANTITIES ONE HEADWALL	REINF. STEEL		10,244 LB			9144 LB			8120 LB			7150 LB			6141 LB			5356 LB			4560 LB			3723 LB			3124 LB			9574 LB			8484 LB			7505 LB		
	CONCRETE	PARAPET Δ	2.8			2.7			2.6			2.6			2.6			2.5			2.5			2.5			2.5			2.5			2.4			2.3		
		WINGWALLS	28.1	88.2 CY		21.9	75.7 CY		16.9	64.7 CY		14.0	56.6 CY		11.4	46.4 CY		8.1	39.3 CY		6.2	34.1 CY		4.5	28.6 CY		3.1	23.5 CY		28.1	80.3 CY		21.9	68.4 CY		16.9	58.1 CY	
		FOOTING *	57.3			51.1			45.2			40.0			32.4			28.7			25.4			21.6			17.9			49.7			44.1			38.9		

Δ INCLUDES TOP OF WINGWALL QUANTITIES.
* ASSUMES APRON AND FLOOR ARE EQUAL THICKNESS, ADJUST CONCRETE QUANTITIES FOR TRANSITION WHERE APRON AND FLOOR THICKNESS ARE NOT EQUAL.

NOTE:
WEIGHT OF BARS OVER 40'-0 LONG INCLUDES AN ALLOWANCE OF 2'-3 FOR LAP. LENGTHS SHOWN FOR BARS OVER 40'-0 LONG DO NOT INCLUDE LAP.

BENT BAR DETAILS

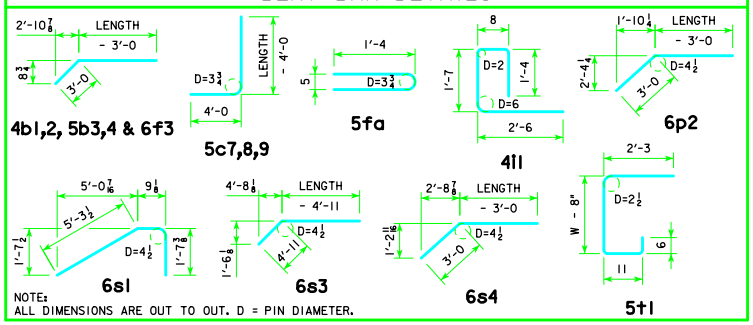

NOTE:
ALL DIMENSIONS ARE OUT TO OUT. D = PIN DIAMETER.

HEADWALL NOTES:

1. SEE DRAWING TWRCB GI-12 FOR GENERAL INFORMATION, SPECIFICATIONS, AND DESIGN STRESSES.
2. THIS HEADWALL IS BASED ON A 3:1 SLOPE NORMAL TO CENTERLINE OF ROADWAY.
3. THE SIDES OF THE FOOTING ARE TO BE FORMED TO INSURE CORRECT LINE AND GRADE.
4. ALL SLAB AND FLOOR REINFORCING STEEL IS TO BE SUPPORTED BY BAR CHAIRS AT INTERVALS OF NOT MORE THAN 3'-0 IN EITHER DIRECTION AS OUTLINED IN THE STANDARD SPECIFICATIONS.
5. CLEAR DISTANCE FROM FACE OF CONCRETE TO NEAR REINFORCING BAR IS TO BE 2" UNLESS OTHERWISE NOTED OR SHOWN. CLEARANCE TO THE BOTTOM ENDS OF VERTICAL BARS SHALL BE 3 INCHES.
6. CONCRETE QUANTITIES ARE ESTIMATED FROM BACK OF PARAPET.
7. HORIZONTAL TAILS OF BARS "b" & "s" ESTIMATED TO EXTEND 2'-0 BEYOND BACK OF PARAPET (INTO END OF BARREL). LONGITUDINAL BARS "d", "6f1", AND "6f3" ESTIMATED TO PROJECT INTO END SECTION OF BARREL A MINIMUM OF 2'-0 BEYOND BACK OF PARAPET.
8. THE "LENGTH" COLUMN REFLECTS TOTAL NUMBER OF FEET NECESSARY TO MEET THESE REQUIREMENTS.

LATEST REVISION DATE

APPROVED BY BRIDGE ENGINEER

Iowa Department of Transportation
Highway Division

STANDARD DESIGN

TWIN REINFORCED CONCRETE BOX CULVERTS

APRIL, 2012

FLARED WING HEADWALLS

0° SKEW

TWH 0-4-12

ENGLISH_RED5GNED_TWINCULVERTS.DGN - TWH 0-4-12 - THIS SHEET ISSUED 04-12