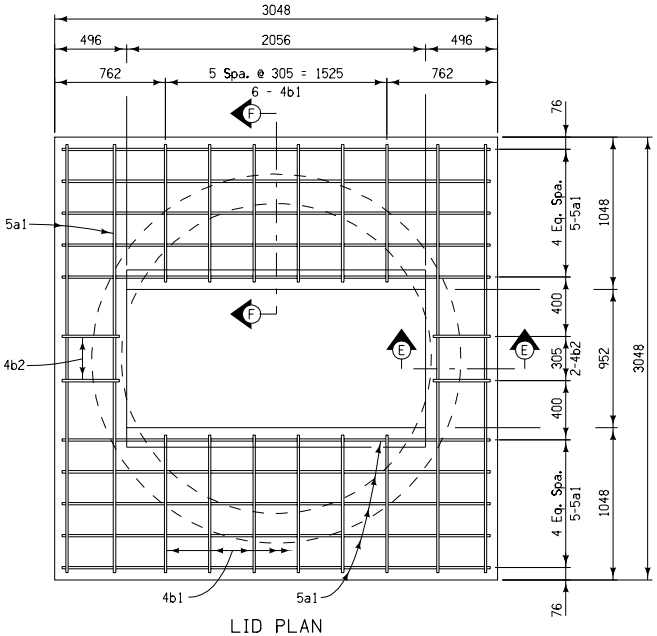

LID PLAN

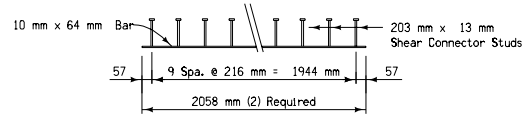

FRAME RING EDGE ARMOR DETAIL

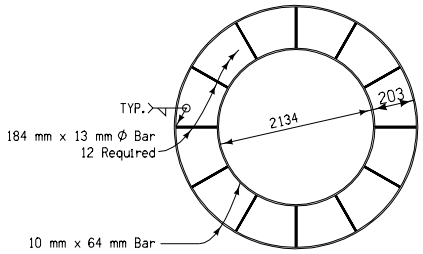

WALL EDGE ARMOR DETAIL

All edge armor steel to be ASTM A36, hot dip galvanized after fabrication.

BILL OF REINFORCING STEEL					
THREE GRATE INTAKE LID - EPOXY COATED					
BAR	LOCATION	SHAPE	NO.	LENGTH	MASS
5a1	Lid, Longit. & Transverse	—	28	2946	37.2
4b1	Lid Hoop		12	2515	29.9
4b2	Lid Hoop		4	1626	6.4
EPOXY COATED REINFORCING STEEL - TOTAL					164.2

BENT BAR DETAILS

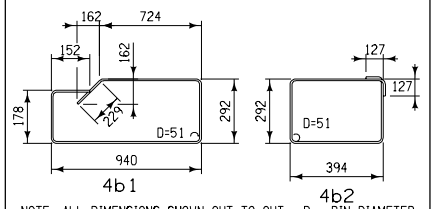

NOTE: ALL DIMENSIONS SHOWN OUT TO OUT. D = PIN DIAMETER

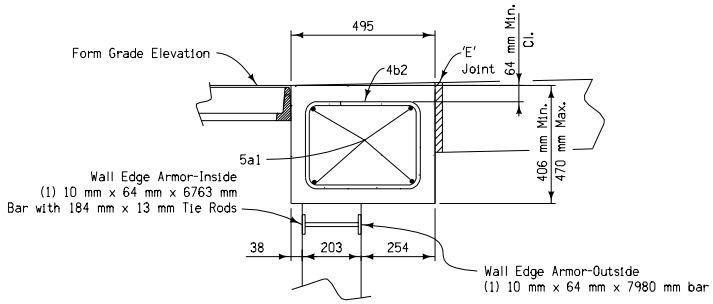

SECTION E-E

QUANTITY SUMMARY FOR THREE GRATE INTAKE LID			
Concrete	2.9	m3	*
Epoxy Coated Reinforcing Steel	164	kg	

* Based on Minimum thickness = 406 mm

The clear distance from face of concrete to near edge or end of reinforcing bar to be 51 mm unless otherwise noted.

(1) Possible Subdrain. See Plans for location and elevation. See Standard Road Plan RF-19C for connection details.

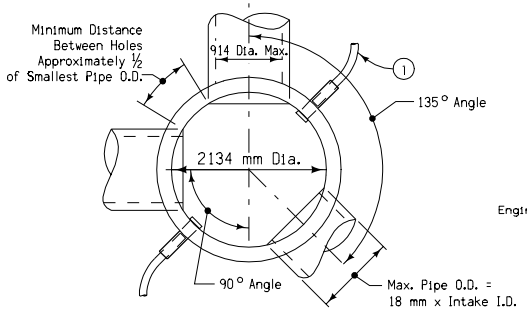

SECTION C-C

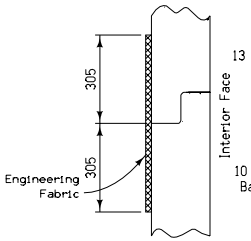

WALL JOINT DETAIL

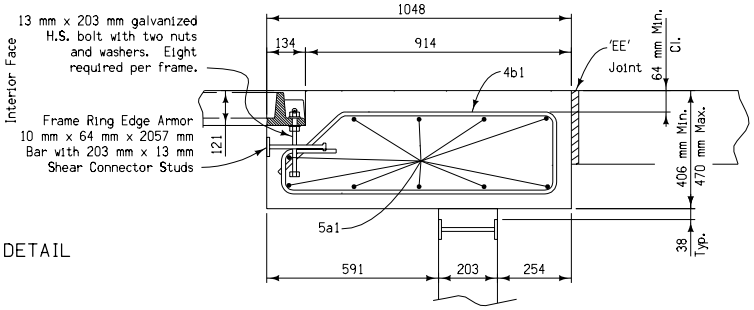

SECTION F-F

All dimensions given in millimeters unless noted.

M

METRIC VERSION

Iowa Department of Transportation

STANDARD ROAD PLAN

REVISION	
1	10-17-06

RA-47B(2)

SHEET 2 of 3

REVISIONS: Changed Headed Anchor to Shear Connector Studs.

Deanna Maifeld

APPROVED BY DESIGN METHODS ENGINEER

TRIPLE GRATE
BARRIER INTAKE, CIRCULAR