Iowa Department of Transportation

TRAFFIC FLOW MAP OF

KEOSAUQUA

VAN BUREN COUNTY

2006 ANNUAL AVERAGE DAILY TRAFFIC

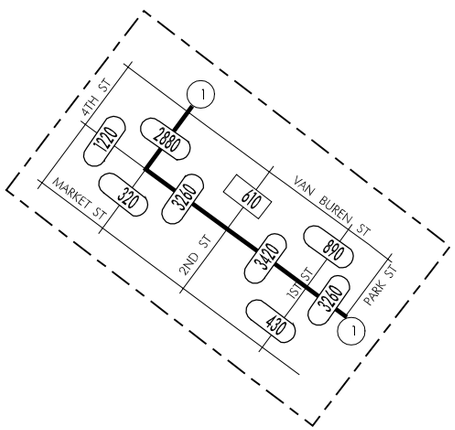

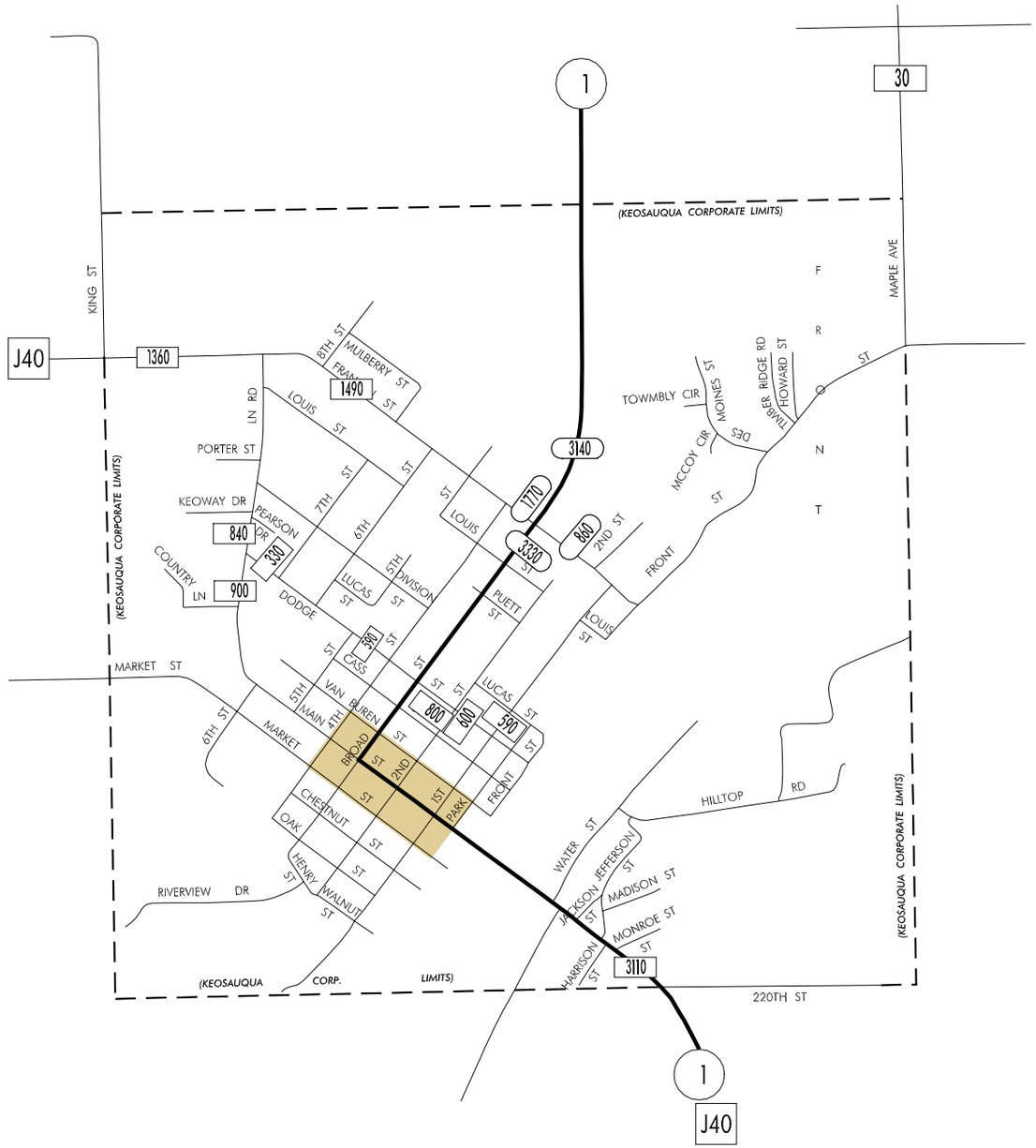

PREPARED BY
IOWA DEPARTMENT OF TRANSPORTATION
DIVISION OF PLANNING AND PROGRAMMING
OFFICE OF TRANSPORTATION DATA
PHONE (515) 239-1289

LEGEND

RECORDER ONLY
MANUAL COUNT