Iowa Department of Transportation

TRAFFIC FLOW MAP OF

MALCOM

POWESHIEK COUNTY

2006 ANNUAL AVERAGE DAILY TRAFFIC

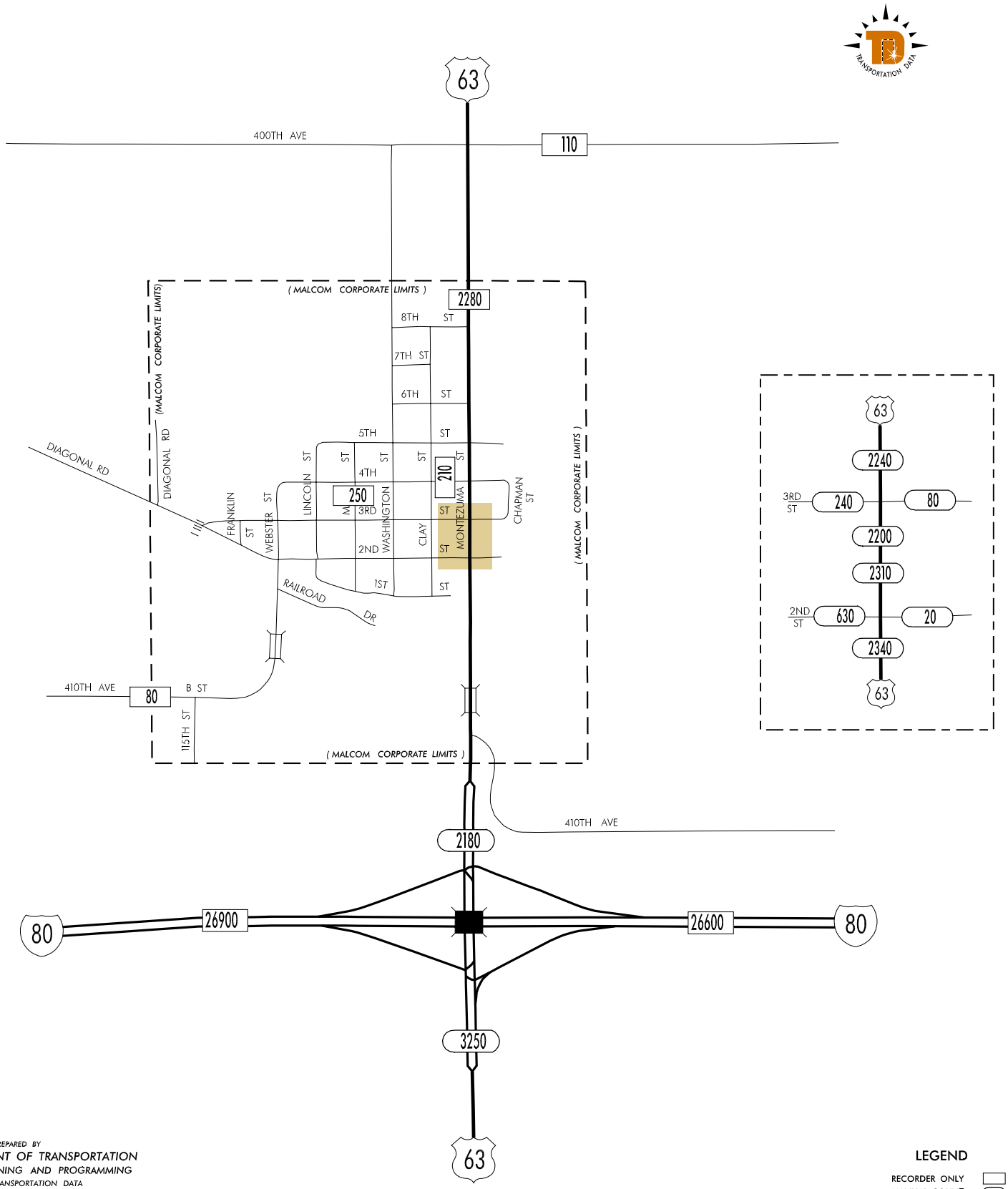

PREPARED BY
IOWA DEPARTMENT OF TRANSPORTATION
DIVISION OF PLANNING AND PROGRAMMING
OFFICE OF TRANSPORTATION DATA
PHONE (515) 239-1289

LEGEND
RECORDER ONLY
MANUAL COUNT