Iowa Department of Transportation

TRAFFIC FLOW MAP OF
BUFFALO CENTER
WINNEBAGO COUNTY
2007 ANNUAL AVERAGE DAILY TRAFFIC

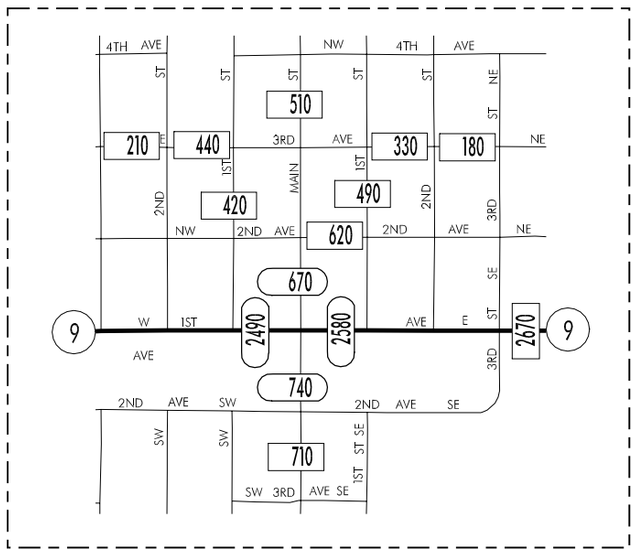

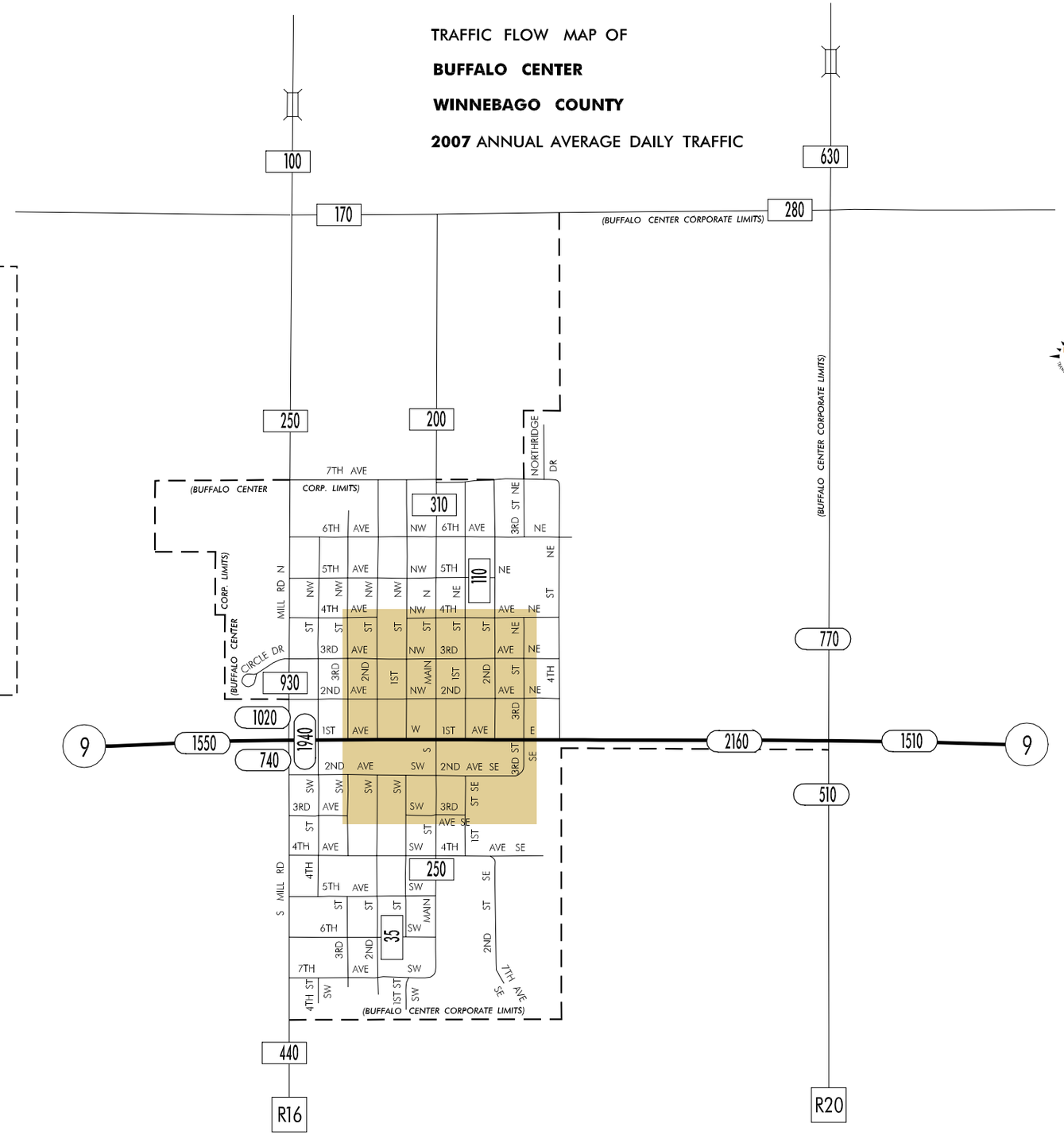

PREPARED BY
IOWA DEPARTMENT OF TRANSPORTATION
DIVISION OF PLANNING AND PROGRAMMING
OFFICE OF TRANSPORTATION DATA
PHONE (515) 239-1289

LEGEND
RECORDER ONLY
MANUAL COUNT