Iowa Department of Transportation

TRAFFIC FLOW MAP OF

MAGNOLIA

HARRISON COUNTY

2008 ANNUAL AVERAGE DAILY TRAFFIC

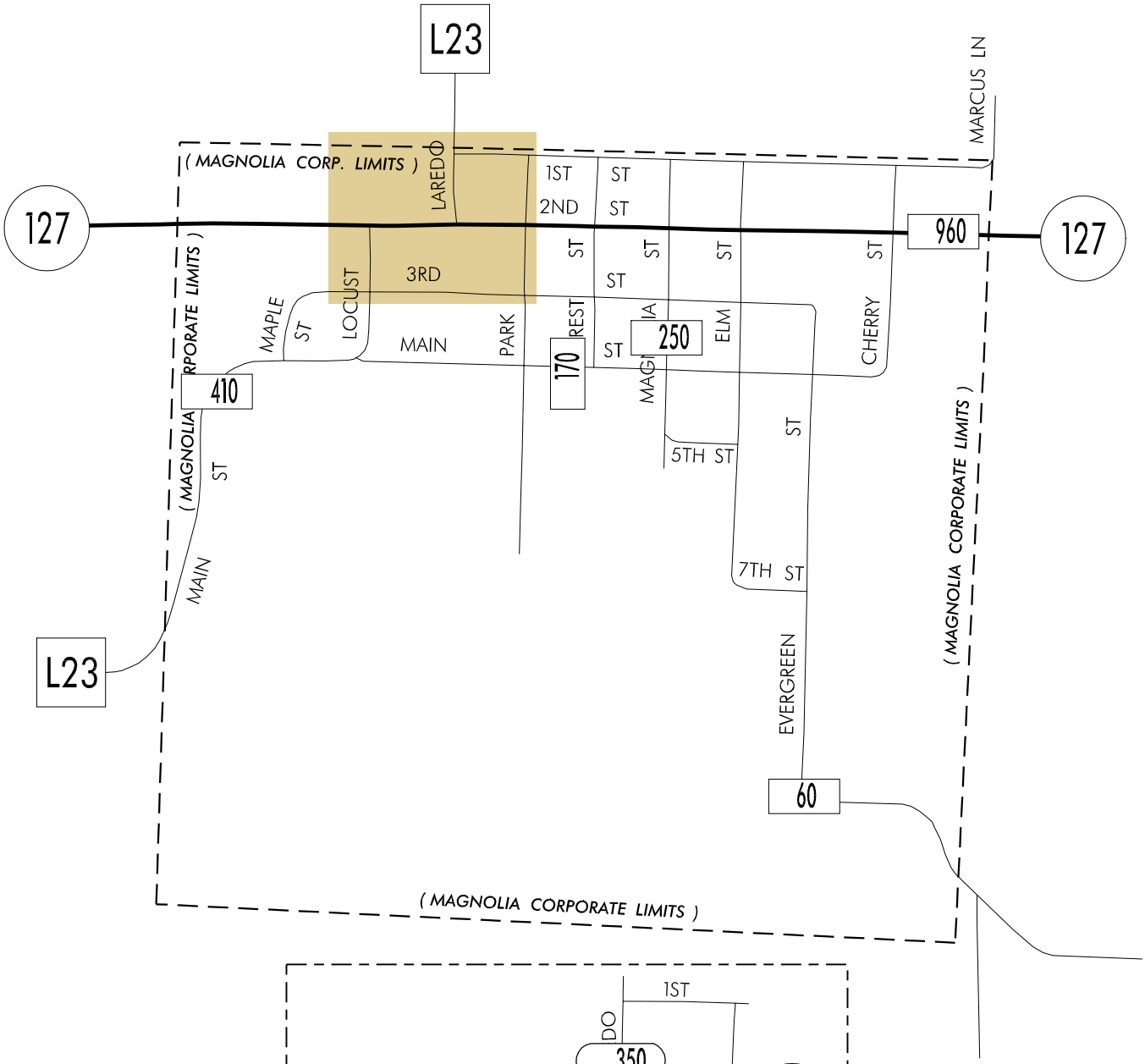

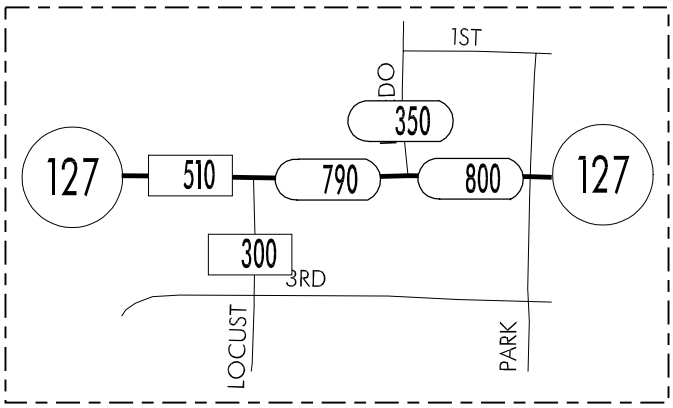

PREPARED BY
IOWA DEPARTMENT OF TRANSPORTATION
DIVISION OF PLANNING AND PROGRAMMING
OFFICE OF TRANSPORTATION DATA
PHONE (515) 239-1289

LEGEND

RECORDER ONLY

MANUAL COUNT