Preface

The author of the *Bridge Design Manual* (BDM) is the Methods Unit of the Bridges and Structures Bureau (BSB).

The BDM shall be used with other Iowa DOT documents and standards including the latest editions of the Bridges and Structures Bureau Standards, the Construction and Materials Bureau Instructional Memoranda, and *Standard Specifications for Highway and Bridge Construction*. It also shall be used with the 2024 AASHTO *LRFD Bridge Design Specifications*, 10th Edition except as noted. The BDM also references the 2002 AASHTO *Standard Specifications for Highway Bridges*, 17th Edition with current errata changes. A list of reference documents and standards along with abbreviations is given in the Introduction section. An additional list is given with each major article or section.

Bridges and Structures Bureau documents are available on the Bureau web site:

https://iowadot.gov/bridge/

Other Iowa DOT documents are available in the Electronic Reference Library:

https://iowadot.gov/erl/index.html

Exceptions with respect to the use of LRFD are as follows:

- Repairs shall continue to follow guidelines in the repair section.
- BDM Article 10.2, Sign Support Structures, is a dual ASD/LRFD article. The Iowa DOT currently is transitioning from allowable stress design (ASD) standards based on the 2013 AASHTO *Standard Specifications for Structural Supports for Highway Signs, Luminaires, and Traffic Signals*, 6th Edition to load and resistance factor design (LRFD) standards based on the 2015 AASHTO *LRFD Specifications for Structural Supports for Highway Signs, Luminaires, and Traffic Signals*, 1st Edition.
- Chapter 5 “Concrete Structures” of the 2017 AASHTO *LRFD Bridge Design Specifications* requires D-regions (disturbed or discontinuity) to be designed using the strut-and-tie method (STM) for the strength and extreme event limit states with some exceptions provided for legacy methods [AASHTO-LRFD 5.5.1.2.3]. Historically, the Iowa DOT has used sectional models, which is a B-region method, in some areas which are classified as D-regions (e.g., typical pier caps). Iowa will continue designing based on its current historical practices until STM is incorporated into the BDM.

In general, the BDM is intended to define Bureau practice for typical Iowa bridges without restricting innovation for unusual site and design conditions. The words “shall”, “required”, “Bureau policy”, and similar terms indicate mandatory specifications that need to be followed unless exceptions are approved by the supervising Unit Leader. Other terms such as “should”, “prefer”, and “recommended” indicate general guidance subject to engineering judgment of the designer. Interpretations of the supervising Unit Leader, the Chief Structural Engineer, the Bridge Project Development Engineer, and the Bridge Engineer supersede policies in this manual.

The entire manual is generally scheduled to be updated twice a year on January 1 and July 1 however these release dates can change, and interim releases may also occur on occasion. Only changes to the previous release will be shown.

Standard CADD notes are provided in Section 13 at the end of the manual.

Users are invited to bring errors and omissions to the attention of the Methods Unit of the Bridges and Structures Bureau.

- Technical and editorial issues: Logan Grothus, 515-239-1905, Logan.Grothus@iowadot.us

- Bridge support software issues: James Denny, 515-239-7935, James.Denny@iowadot.us
- Aesthetic issues: Matthew Gordy, 515-233-7934, Matthew.Gordy@iowadot.us
- CADD issues: Brett Kloss, 515-233-7924, Brett.Kloss@iowadot.us

C0 Preface

2024 ~ Lap and Development Lengths

Starting with the July 2023 release and all releases up to and including the January 2024 release of the Iowa DOT working standards included rebar development and lap length updates based on the 2017 AASHTO *LRFD Bridge Design Specifications*, 8th Edition. These working standards shall be incorporated into project details starting with the October 2024 letting. The signed standard plans have rebar development and lap lengths based on the 2014 AASHTO *LRFD Bridge Design Specifications*, 7th Edition and will be updated to the 8th edition by BSB as time permits. The signed standard plans should be used "as is" until they are updated by BSB.

2024 ~ Deck on Beam Changes

Starting with the July 2023 release and all releases up to and including the January 2024 release of the Iowa DOT working standards included the following changes to the deck on beam details:

- Interior deck thickness increases from 8 inches to 8.5 inches.
- Thickness of the deck overhang tapers increases from a permissible range of 9.00 to 10.25 inches at the exterior beam top flange edge to a permissible range of 10.25 to 11 inches. Thickness of deck overhang tapers increases from 8.75 inches for PPCBs and 9 inches for steel beams at edge of deck to 10 inches for both.
- Top of deck built-in (sacrificial) wearing surface increases from 0.50 inches to 0.75 inches.
- Concrete cover increases from 2.5 inches to 2.75 inches for topmost layer of deck reinforcement and from 1 inch to 1.5 inches for bottommost layer of deck reinforcement.
- Top of deck transverse reinforcement in the deck overhang changes from straight bars to hooked bars.

These working standards shall be incorporated into project details starting with the October 2024 letting. The signed standard plans do not include these updates and should be used "as is" until they are updated by BSB. This item does not involve an LRFD exception but is included here since it involves a significant change in practice.

2024 ~ MASH Rail Implementation

Starting with the July 2023 release and all releases up to and including the January 2024 release of the Iowa DOT working standards includes phasing out of the 34-inch tall TL-4 and 44-inch tall TL-5 NCHRP 350 F-shape barrier rails to be replaced with the 38-inch tall TL-4 and 44-inch tall TL-5 MASH single slope barrier rails. These working standards shall be incorporated into project details starting with the October 2024 letting. The signed standard plans do not include the updates and should be used "as is" until they are updated by BSB.

1 January 2009 ~ Policy for LRFD Design

FHWA LRFD Policy Memorandum and Attached Letter (Memorandum)

MEMORANDUM

Subject: **INFORMATION**: Clarification of LRFD Policy Memorandum

Date: January 22, 2007

From: */s/ Original Signed by*
M. Myint Lwin, P.E., S.E.
Director, Office of Bridge Technology

Reply to Attn of: HIBT-10

To: Directors of Field Services
Resource Center Director
Division Administrators
Federal Lands Highway Division Engineers

On June 28, 2000, FHWA issued a Policy Memorandum announcing its decision regarding a transition time frame for the use of Load and Resistance Factor Design (LRFD) for the design of new bridges on Federal-aid funded projects. According to the memo, all new bridges on which States initiate preliminary engineering after October 1, 2007, shall be designed by the AASHTO LRFD Bridge Design Specification. States unable to meet this date shall provide justification and a schedule, acceptable to the FHWA, to complete the transition.

The purpose of the memorandum herein is to provide FHWA Division Offices, States, and local governments with clarifications regarding FHWA's LRFD Policy Memorandum.

- The term "preliminary engineering" as stated in the LRFD Policy Memorandum shall be interpreted as the initiation of the studies or design activities related to identification of the type, size, and/or location of bridges. The term "initiate" means the date when Federal-aid funds are obligated for preliminary engineering. In cases where Federal-aid funds are not used in preliminary engineering, but are used in construction or other phases of the project, the term "initiate" means the date when the State obligates or expends their own funds for preliminary engineering.
- Superstructure, substructure, and foundation bridge elements shall be designed by LRFD.
- For modifications to existing structures, States have the option of using the LRFD Specifications or the specifications which were used for the original design.
- Shelved bridge projects designed and packaged for construction prior to October 1, 2007, are not subject to the LRFD Policy Memorandum, unless a redesign is required by the State after October 1, 2007.
- The term "new bridges" as stated in the LRFD Policy Memorandum shall be interpreted to include both new and total replacement bridges.
- Finally, the policy applies to all States-initiated Federal-aid funded projects, not just those funded with Highway Bridge Program funds, including on system and off-system projects.

If you have any questions, please feel free to contact Dr. Firas Sheikh Ibrahim at 202-366-4598, or Firas.Ibrahim@dot.gov.

Attachment: LRFD Policy Memorandum (See below.)

U.S. Department of Transportation
Federal Highway Administration

1200 New Jersey Avenue SE
Washington, D.C. 20590

June 28, 2000

Refer to: HIBT

David H. Pope, P.E.
Chairman, Highway Subcommittee on Bridges and Structures
Wyoming Department of Transportation
5300 Bishop Boulevard
Cheyenne, WY 82009-3340

Dear Mr. Pope:

Thank you for the letter of June 20, 2000. We appreciate receiving the advice and recommendation of the AASHTO Highway Subcommittee on Bridges and Structures and its member State bridge engineers on the time frame goals for the use of Load and Resistance Factor Design (LRFD) for the design of bridges. We concur in recommended

time frames and would be pleased to work in partnership with the States to attain the listed four goals which, to repeat, are:

1. All new bridges on which States initiate preliminary engineering after October 1, 2007, shall be designed by the LRFD Specifications.
2. All new culverts, retaining walls, and other standard structures on which States initiate preliminary engineering after October 1, 2010, shall be designed by LRFD Specifications, with the assumption that the specifications and software for these structures are "mature" at this time.
3. States unable to meet these dates will provide justification and a schedule for completing the transition to LRFD.
4. For modifications to existing structures, States would have the option of using LRFD Specifications or the specifications which were used for the original design.

A copy of this letter and yours are being provided to the State bridge engineers and our FHWA field offices so that they are aware of FHWA's decision on this matter.

Sincerely yours,

/s/ original signed by
David H. Densmore
Director of Bridge Technology

Enclosure

2011 ~ Increase Class C Concrete Strength to 4.0 ksi

In recent years the typical concrete strengths achieved by Class C concrete have been greater than the 3500 psi used for design. For structural components a higher strength concrete would be advantageous, and for a few of the longer prestressed concrete beams 4.0 ksi concrete is required for the bridge deck. After checking with state and district materials engineers it was decided to increase the design strength for Class C concrete to 4.0 ksi for design, except when a higher strength is required. The increase in design strength also requires an increase in minimum flexural strength to 575 psi for form removal. The change from psi to ksi units for design strength is consistent with the transition to AASHTO LRFD Specifications.

TABLE OF CONTENTS ~ GENERAL DESIGN

1 General Design
- 1.1 Overview
- 1.2 Definitions
- 1.3 Abbreviations and notation
- 1.4 References
  - 1.4.1 Direct
  - 1.4.2 Indirect
- 1.5 Americans with Disabilities Act
  - 1.5.1 Sidewalks, trails, and shared use paths
  - 1.5.2 Pedestrian overpasses
  - 1.5.3 Other bridge-related facilities
- 1.6 Buy America Provisions
- 1.7 Bridge layout
  - 1.7.1 Profile grade line
  - 1.7.2 Slope
  - 1.7.3 Spiral curve
- 1.8 Bridge plan preparation
  - 1.8.1 Title sheet
    - 1.8.1.1 Engineers seals
    - 1.8.1.2 Traffic data
  - 1.8.2 First sheet
    - 1.8.2.1 Bid items and quantities
    - 1.8.2.2 General notes
  - 1.8.3 Situation plan
  - 1.8.4 Staking coordinates and staking diagram
  - 1.8.5 Substructure general
  - 1.8.6 Pier details
  - 1.8.7 Abutment details
  - 1.8.8 Superstructure general
    - 1.8.8.1 CWPG
    - 1.8.8.2 PPCB
  - 1.8.9 Repair/overlay details
  - 1.8.10 Miscellaneous details
    - 1.8.10.1 Barrier rails
    - 1.8.10.2 Expansion devices
    - 1.8.10.3 Subdrains
    - 1.8.10.4 Slope protection
    - 1.8.10.5 Lighting
    - 1.8.10.6 Approach sidewalk
    - 1.8.10.7 Other
  - 1.8.11 Aesthetics
  - 1.8.12 Soils sheets
  - 1.8.13 Roadway plans
  - 1.8.14 Signed standard plans
- 1.9 Culvert plan preparation
  - 1.9.1 Title sheet
  - 1.9.2 First sheet
  - 1.9.3 Situation plan
  - 1.9.4 Repair/extension project details
  - 1.9.5 Reinforced concrete
  - 1.9.6 Roadway plans
  - 1.9.7 Signed standard plans
- 1.10 Sign support structure plan preparation
- 1.11 Quality Control/Quality Assurance Plan

1.11.1 Design team
1.11.2 Plan preparation tools
1.11.3 Quality control
1.11.3.1 Designer
1.11.3.2 Design technician
1.11.3.3 Checker
1.11.4 Project documentation
1.11.5 Quality assurance
1.11.6 Post-letting involvement
1.12 Cost estimates
1.13 Software
1.14 Plan turn-in
1.14.1 E-file submittals
1.14.2 Plan coordination
1.14.3 Prior to plan turn-in
1.14.4 PPMS bid items for plan turn-in
1.15 Plan changes after plan turn-in
1.15.1 Plan changes prior to advertising
1.15.2 Plan Changes after advertising - Addendum
1.16 Plan revisions
1.17 Working drawing and calculation submittals
1.18 Local systems review
1.19 OSHA fall protection
1.19.1 Applicable OSHA citations
1.19.2 Structures requiring OSHA fall protection
1.19.3 Types of physical OSHA fall protection devices
1.19.4 Retaining wall fall protection
1.19.5 MSE wall-supported fall protection
1.19.6 RCB headwall fall protection
1.19.7 Drop inlet fall protection

1 General Design

1.1 Overview

The Bridges and Structures Bureau (BSB) follows established Iowa Department of Transportation (Iowa DOT) practices, and on design and repair projects the Bureau works closely with the Design Bureau and Contracts and Specifications Bureau, as well as other bureaus. Bridges, culverts, sign structures, and other transportation structures are designed either by the Bureau or by engineering consultants, which are reviewed by the Bureau. To accommodate both groups of designers, many of the Bureau practices and resources have been placed on the Bureau web site (https://iowadot.gov/bridge/). Other resources for designers in the Bureau are available on the Iowa DOT W-drive. Complete details of the resources will not be repeated in this manual section.

Bridge and culvert designs generally progress from concept to preliminary design to final (or detail) design to contract. Generally, projects are packaged for contract letting as road, bridge, or separate. For a road project the Design Bureau has the lead and incorporates plan sheets from the Bridges and Structures Bureau and other bureaus into its plans. For a bridge project the reverse is true. For a separate project both the Design Bureau and the Bridges and Structures Bureau develop separate design plans. Even when projects are developed separately, however, the Contracts and Specifications Bureau may tie them together in a single contract.

Project plans at the Iowa DOT are produced in MicroStation software by design technicians as well as engineers. Plan production is aided by seed files for typical plan sheets, working standard drawings, and signed standard plans for several bridge, culvert, and sign support structure types, all of which are

available on the Bureau's web site. Both preliminary and final design software developed by the Bureau also is available on the web site and on the W-drive. Specific design and detail policies are covered either in this Bridge Design Manual or in Culvert and Bridge Checklists on the web site.

The Bureau has had a long-standing policy of checking in-house new bridge designs, and that policy now has been broadened and formalized in the Quality Control/Quality Assurance Plan [BDM 1.11]. A similar plan for bridge engineering consultants has been written into "Conducting Business with the Iowa DOT Bridges and Structures Bureau" [BDM 1.4].

It is expected that most projects will be completed without need for revision. However, necessary revisions can be accommodated during the contract letting process.

1.2 Definitions

Article refers to any numbered subdivision within a section of a direct reference such as *AASHTO LRFD Bridge Design Specifications, Bridge Design Manual,* or *Standard Specifications for Highway and Bridge Construction*. All of the following are articles: 1.1, 1.1.1, 1.1.1.1, and 1.1.1.1.1.

Average span length (ASL) is the average length of the two spans adjacent to a pier. See Figure 1.2-1.

Bridge length (BL) for structural design is the length from centerline of abutment bearing to centerline of abutment bearing. See Figure 1.2-1. In some situations bridge length may be taken as the length from expansion joint to expansion joint.

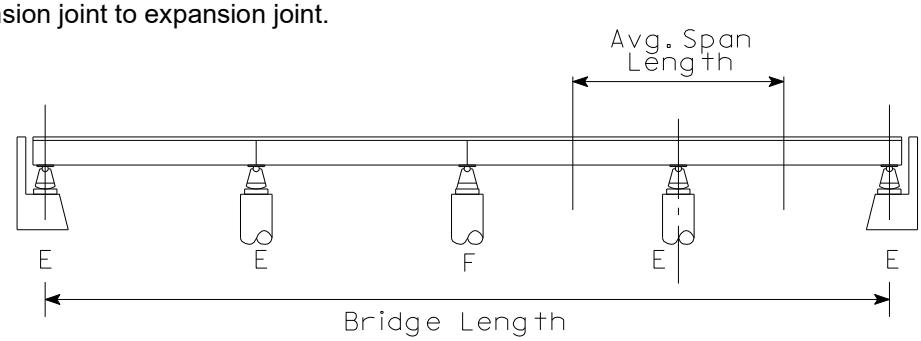

Figure notes:

- E indicates an expansion support.
- F indicates a fixed support.

Figure 1.2-1. Length definitions

Built-in (sacrificial) wearing surface (BWS) is taken as the top 0.75 inches of the original bridge deck. Weight of the built-in wearing surface is considered part of DC1, non-composite dead load of structural components and nonstructural attachments, [AASHTO-LRFD 3.3.2], but the wearing surface is not considered to contribute to the strength or stiffness of any part of the superstructure.

Bureau refers to the Bridges and Structures Bureau, Iowa Department of Transportation.

File includes electronic information in the project directory. Up to about the year 2022 the term file referred primarily to hard copy information placed in a physical yellow manila paper file envelope. References to file in this section of the Bridge Design Manual will be refined in the future.

Future wearing surface (FWS) is a concrete or hot mix asphalt overlay applied to the original bridge deck. Bureau practice is to consider the future wearing surface part of DW under the AASHTO LRFD Specifications at 0.020 ksf but to neglect any potential contribution of the overlay to strength or stiffness of the superstructure.

J-series is a set of standard plans for continuous concrete slab (CCS) bridges of specified roadway width.

Longitudinal is the direction associated with the roadway centerline of construction and main girders. See Figure 1.2-2.

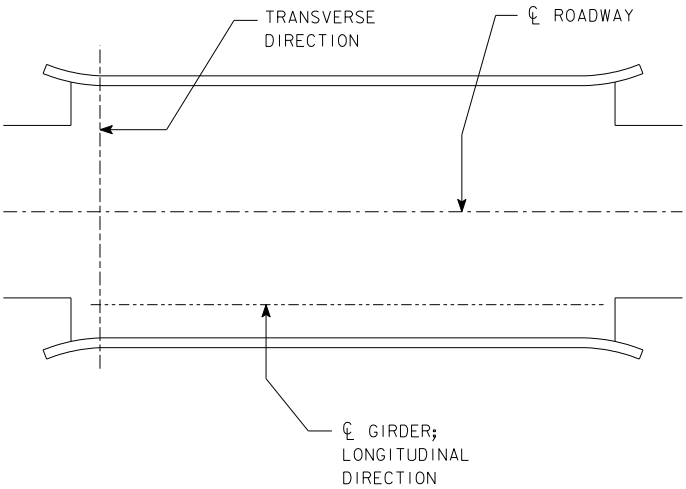

Figure 1.2-2. Longitudinal and transverse direction definitions

National Highway System (NHS) is composed of the following subsystems:

- Interstate,
- Other Principal Arterials,
- Strategic Highway Network (STRAHNET),
- Major Strategic Highway Network Connectors, and
- Intermodal Connectors.

Iowa state and city NHS maps are available from the NHS web site at the following URL.

https://www.fhwa.dot.gov/planning/national_highway_system/

Natural ground elevation is the average natural ground elevation along the longitudinal centerline of the foundation.

Primary Highway System: "Primary roads" or "primary road system" means those roads and streets both inside and outside the boundaries of municipalities which are under department (defined as state department of transportation) jurisdiction [Iowa Code 306.3.6].

Quality Assurance is an overall review performed and documented by the Transportation Engineer Manager (typically the supervising Unit Leader) during a bridge design.

Quality Control is the process of checking accuracy of computations, plans, and other design documents to ensure that a bridge design is free of errors and omissions. Quality control is the responsibility of the designer, design technician, and checker.

Section refers to a chapter or division of a direct reference such as *AASHTO LRFD Bridge Design Specifications, Bridge Design Manual,* or *AASHTO Standard Specifications for Highway and Bridge Construction*. The following are examples of sections: 1. 2. and 3.

Substructure is any construction below the bearing seats or, in the absence of bearings, below the soffit of the superstructure.

Transverse is the direction normal to the roadway centerline of construction and main girders. See Figure 1.2-2.

Unit Leader is the supervisor of the Bridges and Structures Bureau Preliminary Design Unit, Final Design Unit, or Consultant Coordination Unit.

1.3 Abbreviations and notation

A&A, authentication and authorization
ASL, average span length
BARS, Bridge Analysis and Rating System
BL, bridge length
BRIS, Bridge Information System
BSB, Bridges and Structures Bureau (formerly OBS, Office of Bridges and Structures)
BWS, built-in wearing surface
CCS, continuous concrete slab
CWPG, continuous welded plate girder
D, dead load, including DC1, DC2, and DW
DC1, non-composite dead load of structural components and nonstructural attachments such as beams, deck, haunches, and diaphragms [AASHTO-LRFD 3.3.2].
DC2, composite dead load of structural components and nonstructural attachments such as barrier rails, sidewalks, curbs, and medians that are not part of the initial deck pour [AASHTO-LRFD 3.3.2].
DGN or **dgn,** file type for MicroStation files
DW, dead load of wearing surfaces and utilities [AASHTO-LRFD 3.3.2].
EOR, engineer of record
ERMS, Electronic Records Management System
FHWA, Federal Highway Administration
Form 220008, Bridge Inventory Report Form (formerly Form 107)
FWS, future wearing surface
I, live load impact [AASHTO-I 3.8]
IM, dynamic load allowance [AASHTO-LRFD 3.6.2]
L, live load, HS20 truck load or lane load, whichever has greater effect; military load, if applicable [AASHTO-I 3.7]
LARS, Load Analysis and Rating System
LL, live load, HL-93 [AASHTO-LRFD 3.6.1]
LRFD, load and resistance factor design
MB, Maintenance Bridge. MB projects include bridge deck patching, bridge approach work, and miscellaneous bridge repairs.
N or N-value, standard penetration test number of blows per foot. N also may be given as **SPT NO**, the Standard Penetration Number, in the soils information chart reference.
NHS, National Highway System
PIN, program improvement number
POI, point of intersection of pavement surface cross slopes that defines the profile grade location
PPCB, pretensioned prestressed concrete beam
PPMS, Program and Project Management System (Masterworks)
PSS, Project Scheduling System
QA, quality assurance
QC, quality control
QM-A, Quality Management - Asphalt
RAMS, Road Asset Management System
RCBC, reinforced concrete box culvert
RSB, rolled steel beam
SIIMS, Structure Inventory and Inspection Management System
TEM, Transportation Engineer Manager (usually the supervising Unit Leader)
TS&L, type, size, and location
URL, Uniform Resource Locator

1.4 References

1.4.1 Direct

Throughout the *Bridge Design Manual* there are frequent, direct references to specific portions of standards and publications. Direct references are included in brackets [ ] using the abbreviations given below. Applicable references to the AASHTO LRFD Specifications and, in a few cases, to the Standard Specifications are given with each article heading.

Although the latest editions are listed below there are some circumstances in which documents referenced in this manual have been prepared on the basis of previous editions.

[AASHTO-division article, table, or figure] refers to *AASHTO Standard Specifications for Highway Bridges, 17th Edition (2002)* with current errata changes - design, seismic design, or construction division with article, table, or figure number.

[AASHTO-LRFD article, table, or figure] refers to *AASHTO LRFD Bridge Design Specifications, 10th Edition (2024)* with article, table, or figure number.

[AASHTO-LRFD-2020 article, table, or figure] refers to *AASHTO LRFD Bridge Design Specifications, 9th Edition (2020)* with article, table, or figure number.

[AASHTO-Temp article, table, or figure] refers to *AASHTO Guide Design Specification for Bridge Temporary Works, 1st Edition (1995) with 2008 Interim Revisions* with article, table, or figure number. [See also 2nd Edition (2017).]

[AASHTO-LTS-6 article, table, or figure] refers to AASHTO *Standard Specifications for Structural Supports for Highway Signs, Luminaires, and Traffic Signals, 6th Edition (2013)* with article, table, or figure number.

[AASHTO-LRFDLTS-1 article, table, or figure] refers to *AASHTO LRFD Specifications for Structural Supports for Highway Signs, Luminaires, and Traffic Signals, 1st Edition (2015)* with article, table, or figure number.

[BDM article, table, figure, or note] refers to the Iowa DOT Bridges and Structures Bureau *LRFD Bridge Design Manual* with article, table, figure, or plan note number. (Available on the Internet at:https://iowadot.gov/bridge/Design-Policies/LRFDdesignmanual)

[IDOT DS-number] refers to an Iowa DOT developmental specification, which is a hybrid of a supplemental specification and special provision.

[IDOT PPM policy number] refers to a policy in the Iowa DOT *Policies and Procedures Manual.*

[IDOT SS article] refers to Iowa DOT *Standard Specifications for Highway and Bridge Construction, Series 2009* with article number. (Available on the Internet at: https://iowadot.gov/erl/current/GS/Navigation/nav.htm)

[BSB SS sheet number] refers to a Bridges and Structures Bureau, Highway Administration “Standard Sheet” with sheet number. (Available on the Internet at: https://iowadot.gov/bridge/Bridge-and-Culvert-Standards/Bridge-Standards)

[DB DM article, table, or figure] refers to the Design Bureau, Highway Administration *Design Manual* with article, table, or figure number. (Available on the Internet at: https://iowadot.gov/design/Design-manual)

[DB RDD sheet number] refers to the Design Bureau, Highway Administration "Road Design Details" with sheet number. Formerly the detail manual was referred to as the "green book." (Available on the Internet at: https://iowadot.gov/design/Road-design-details)

[DB SRP sheet number] refers to a Design Bureau, Highway Administration "Standard Road Plan" with sheet number. Formerly the plan manual was referred to as the "red book." (Available on the Internet at: https://iowadot.gov/design/Standard-road-plans)

[CMB IM number] refers to Construction and Materials Bureau, Iowa DOT Instructional Memorandum number. (Available on the Internet at: https://iowadot.gov/erl/current/IM/navigation/nav.htm)

1.4.2 Indirect

Indirect references are general and infrequent sources of information for *Bridge Design Manual* that usually are not linked with specific article or section numbers. The list below is not complete; see major articles for applicable complete lists.

American Association of State Highway and Transportation Officials (AASHTO). *Manual for Bridge Evaluation, 3rd Edition.* Washington: AASHTO, 2018.

American Concrete Institute (ACI). *Building Code Requirements for Structural Concrete (ACI 318-19) and Commentary (ACI 318R-19).* Farmington Hills: ACI, 2019.

American Institute of Steel Construction (AISC). *Steel Construction Manual, 15th Edition.* Chicago: AISC, 2017.

American Railway Engineering and Maintenance-of-Way Association (AREMA). *Manual for Railway Engineering, 2019 Edition*. Landover: AREMA, 2019.

American Society for Testing and Materials (ASTM). *2022 Annual Book of ASTM Standards*. West Conshohocken: ASTM, 2022.

American Welding Society (AWS). *Bridge Welding Code, AWS D1.5-2020.* Miami: AWS, 2020.

Dirks, Kermit and Patrick Kam. *Foundation Soils Information Chart, Pile Foundation*. Ames: Iowa Department of Transportation, Office of Road Design, January 1989/September 1994.

Greimann, L.F., R.E. Abendroth, D.E. Johnson, and P.B. Ebner. *Final Report, Pile Design and Tests for Integral Abutment Bridges, HR-273, and Addendum.* Ames: Iowa Department of Transportation and College of Engineering, Iowa State University, 1987.

Lundquist, William A. *Iowa DOT Bridge Design Office Metric Handbook.* Ames: Office of Bridges and Structures, 1994 updated through 1996.

Federal Highway Administration (FHWA). *Steel Bridge Design Handbook*. FHWA-HIF-16-002. Washington, DC: FHWA, 2015.

Bridges and Structures Bureau. *Conducting Business with the Iowa DOT Bridges and Structures Bureau.* Ames: Bridges and Structures Bureau, April 2021. (Available on the Internet at: https://iowadot.gov/bridge/policy/ConductingBusinessWithIADOT.pdf)

Bridges and Structures Bureau, *Bridge and Culvert Plan Checklists*. (Available on the Internet at: https:/iowadot.gov/bridge//design-policies/Bridge-and-Culvert-Plan-Checklist)

Construction and Materials Bureau. *Construction Manual.* Ames: Construction and Materials Bureau, Iowa Department of Transportation, 2006. (Available on the Internet at: https://iowadot.gov/erl/current/CM/Navigation/nav.htm)

Precast/Prestressed Concrete Institute (PCI). *Bridge Design Manual.* 3rd Edition, 2nd Release. Chicago: PCI, 2014. (Available on the Internet at: https://www.pci.org/ItemDetail?iProductCode=MNL-133-11)

Sunday, Wayne and Kyle Frame. *New Bridge Construction Handbook.* Ames: Construction and Materials Bureau, Iowa Department of Transportation, 2000. (Available on the Internet at: https://iowadot.gov/construction_materials/structures_foundations/bridge_construction_handbook.pdf)

1.5 Americans with Disabilities Act

The Iowa Department of Transportation (Iowa DOT) intends to comply with the Americans with Disabilities Act (ADA), and the Design Bureau has developed specific guidelines based on “Proposed Guidelines for Public Rights of Way” (PROWAG) of 2011 and “Americans with Disabilities Act Accessibility Guidelines” (ADAAG) of 2010. The Design Bureau guidelines are in Chapter 12 of the Design Manual [DB DM 12A, 12B, and 12C], and more may be added in the future. The guidelines affect all new transportation facilities, and the Iowa DOT is developing a transition plan for existing facilities on state rights-of-way.

Because of the law and enforcement, the guidelines are absolute and not subject to engineering judgment. Construction tolerances must be accommodated on the high side of a minimum and on the low side of a maximum. For example, the Design Bureau has chosen to specify a target sidewalk cross slope of 1.5 percent to accommodate construction tolerances on the low side of the PROWAG 2 percent maximum.

For alteration of existing facilities there may be allowance for practicality when it is impossible to meet all guidelines. The designer shall discuss all exceptions with the Methods Unit of the Design Bureau.

Currently the Design Bureau requires bridges with “pedestrian access” to have ADA compliant facilities [DB DM 12C-1]. “Pedestrian access” includes sidewalks, trails, and shared use paths. Although ADA affects the design of new bridges, the Design Bureau also recommends ADA upgrades outside project limits [DB DM 12C-1]. In some cases, this could involve a bridge near road repairs when the bridge otherwise would not be included in the project.

Generally, it appears that complying with ADA in design of bridges with pedestrian facilities will involve maintaining minimum width, providing a slip-resistant walking surface, providing a surface with a maximum cross slope of 2 percent, bridging all joints that may be wider than 1/2 inch, beveling all vertical surface discontinuities more than 1/4 inch, and limiting all vertical surface discontinuities to 1/2 inch. For unusual situations on or under bridges requiring curb ramps, detectable warning surfaces, and other special accommodations the designer shall consult with the Methods Unit of the Design Bureau.

1.5.1 Sidewalks, trails, and shared use paths

Currently the Design Bureau has prepared guidelines for sidewalks and shared use paths [DB DM 12A-2, 12B-2]. Trails generally are defined as recreational facilities rather than transportation facilities, and the usual standards for trails may not meet the ADA [DB DM 12B-1]. The bridge designer shall consult with the Methods Unit in the Design Bureau for the latest standards for trails.

The following guidelines apply to a sidewalk on a bridge and, in a few cases, are slightly different from the Design Bureau’s guidelines for a sidewalk beyond a bridge deck.

- Minimum width for a sidewalk shall be 5 feet. This width shall be clear of all obstructions at all elevations less than 6.7 feet above the sidewalk surface. Although the PROWAG guidelines state a minimum width of 4 feet, at a width of less than 5 feet passing zones are required, which would require a wider bridge deck at the zones. It is simpler for bridge design to provide a constant 5-foot width. Exceptions need to be discussed with the Methods Unit in the Design Bureau.

- Maximum cross slope shall be 2 percent. The Design Bureau uses a target 1.5 percent slope. The BSB will also typically target 1.5 percent slope on the bridge. Bridge sidewalks generally are constructed more accurately than sidewalks on grade so if drainage and ponding are a concern, consideration can be given to using a 2 percent cross slope on the bridge. The plan note needs to be worded carefully so that the contractor provides adequate drainage slope but does not exceed a 2 percent cross slope.

- Because a bridge sidewalk will be contained within the highway right-of-way, sidewalk grade in the direction of travel may follow but not exceed the roadway grade.

- The sidewalk surface shall be firm, stable, and slip resistant. Generally, the Iowa DOT standard specifications for a burlap drag or broom texture on concrete sidewalks should meet this requirement [IDOT SS 2511.03, C, 3]. In cases where steel plates are used to bridge deck joints the designer shall specify galvanized floor plate with raised figures (ASTM A786/A786M), also known as checker or diamond plate.

- Galvanized steel floor plate shall be used to bridge all joints greater than 1/2 inch wide in the direction of travel. For movable joints the plate shall be attached to one side with recessed anchor screws flush with the riding surface of the plate.

- Elevation discontinuities, such as floor plate, shall be limited to 1/2 inch. Elevation discontinuities between 1/4 inch and 1/2 inch shall be beveled with a slope not steeper than 1:2, vertical to horizontal, and the bevel shall be applied to the entire vertical discontinuity.

- If a sidewalk is provided at the elevation of the bridge deck, the sidewalk shall be separated from the roadway with a separation barrier [BDM 5.8.1.2.4]. If a sidewalk is elevated from the bridge deck with a curb no sidewalk edge protection at the curb is required.

1.5.2 Pedestrian overpasses

A bridge designed for pedestrian access only shall meet the guidelines stated above [BDM 1.5.1] and, in addition, shall have a maximum grade of 5 percent. See also the Preliminary section in this manual for guidelines specific to pedestrian overpasses [BDM 3.2.5]. Because the connecting facilities need to fit the overpass, the designer shall consult with the Methods Unit of the Design Bureau.

1.5.3 Other bridge-related facilities

Pedestrian underpasses and other bridge-related facilities shall meet the guidelines stated above [BDM 1.5.1] and, in addition, shall have a maximum grade of 5%. See also the Preliminary section in this manual for guidelines specific to pedestrian underpasses [BDM 3.5]. Because the connecting facilities need to fit the underpass or other facility, the designer shall consult with the Methods Unit of the Design Bureau.

The elevation guidelines for sidewalks listed above, when applied to box culvert underpasses, will require that the culvert floor be flat, without frost trough [7.2.4.11.4]. Because floor joints between precast box culvert sections are likely to exceed 1/2 inch in the direction of travel, precast culvert floors shall include a PC overlay [7.3.4.2.4]

1.6 Buy America Provisions

In general all manufactured products of iron, steel, or which have a coating of steel must be of domestic origin and shall be melted and manufactured in the U.S. For the specific requirements of the Buy America Provisions, see IDOT SS 1107.06, B and CMB IM 107.

Two of projects in 2014 included components manufactured from channel sizes of up to 10 inches. Smaller size channels are not always readily available in the U.S. For these smaller size channels, the designer should specify equivalent bent plates.

1.7 Bridge layout

1.7.1 Profile grade line

When the profile grade line is defined at the centerline of approach roadway it is necessary to consider the transition between the template of the approach roadway and the crown template of the bridge deck. The Design Bureau defines the profile grade to be the point of intersection (POI) between the pavement surface cross slopes as shown in Figure 1.7.1. The deck elevation at the bridge deck crown will be below the POI to account for the rounding of the bridge deck with a parabolic template.

The rounding of the approach roadway surface is not as well defined as the parabolic template established for the bridge deck crown, however some rounding of the roadway surface at the cross slope intercepts is typical during pavement placement and will match reasonably close to the template shown for the bridge deck crown.

The designer shall establish bridge deck elevations using Figure 1.7.1 and the appropriate ‘X’ value from Table 1.7.1. Typically, the crown template with the appropriate inserted ‘X’ and slope values should be shown on the Top of Slab Elevations sheet.

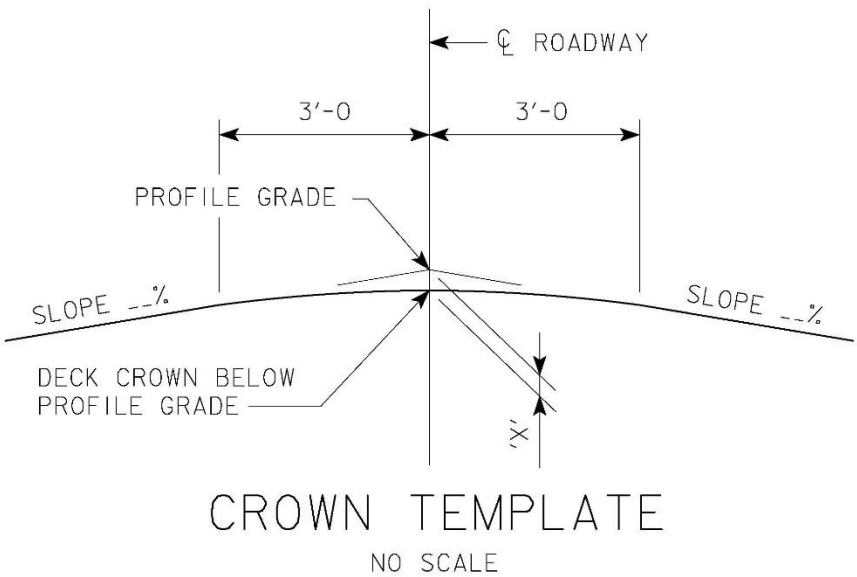

Figure 1.7.1. Crown template with profile grade

Table 1.7.1. Recommended values for ‘X’ in Figure 1.7.1

Slope, %	‘X’, feet
2.0	0.03
2.5	0.04
3.0	0.05

Using this method will ensure the approach roadway surface in the travelled lanes and the outside edge of pavement will match the bridge deck elevations. Elevations shown on the longitudinal section of the situation plan sheet (or TS&L) will reflect the top of bridge deck crown elevations along the centerline of approach roadway to the nearest hundredth of a foot. These elevations shall be noted on the situation plan sheet with the correct ‘X’ value inserted as follows:

TOP OF BRIDGE DECK CROWN 'X’ FEET BELOW PROFILE GRADE.

1.7.2 Slope

Bridges on steeper grades require additional consideration from designers:

- Horizontal versus along grade dimensioning with respect to span and beam lengths.
- The effect of deck and end beam slope on the detailing of expansion joints.
- Clearance between the bottom flange of beams and the edge of abutment footings or pier caps.
- Bearing details for tapered and curved sole plates.

Designers also need to consider the tendency of bridges with steeper downward slope over the entire length of the bridge to creep downhill over time. In order to prevent this movement, consideration should be given to fixing multiple piers and using integral or semi-integral abutments at least on the low end of the bridge.

When the difference between the horizontal length and the profile grade length for any span within a PPCB bridge is greater than 1/2 inch follow the guidelines below.

Bridge stationing shall be measured along the horizontal from centerline to centerline of bearings (vertical), but individual spans and bridge length are to be measured along the grade from the centerline to centerline of bearings (normal to grade) based on standard beam lengths as indicated in Figure 1.7.2-1.

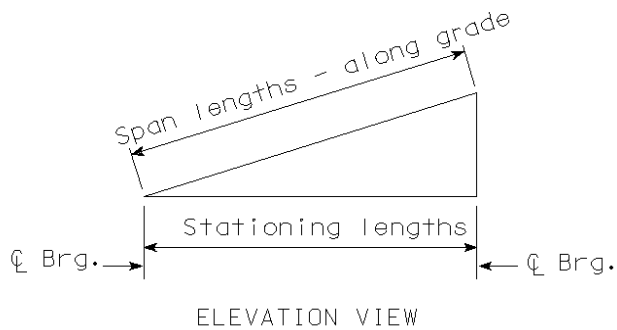

Figure 1.7.2-1. Dimensioning of stationing and span lengths

The situation plan should dimension the horizontal lengths of the bridge, centerline to centerline of abutment bearings and centerline to centerline of spans, and the corresponding stations. The plan should also include the dimension lengths from centerline to centerline of abutment bearings and face to face of paving notches for the lengths along the profile grade. Label these lengths "Horizontal" and "Along Grade". All other applicable plan lengths should be labeled accordingly. Although the span lengths based on profile grade chords will be known approximately during preliminary design, the final designer may need to adjust the lengths slightly depending on camber.

Include in the plans a partial longitudinal section showing centerline of abutment bearing vertical and centerline of bearing normal to grade as shown in Figure 1.7.2-2.

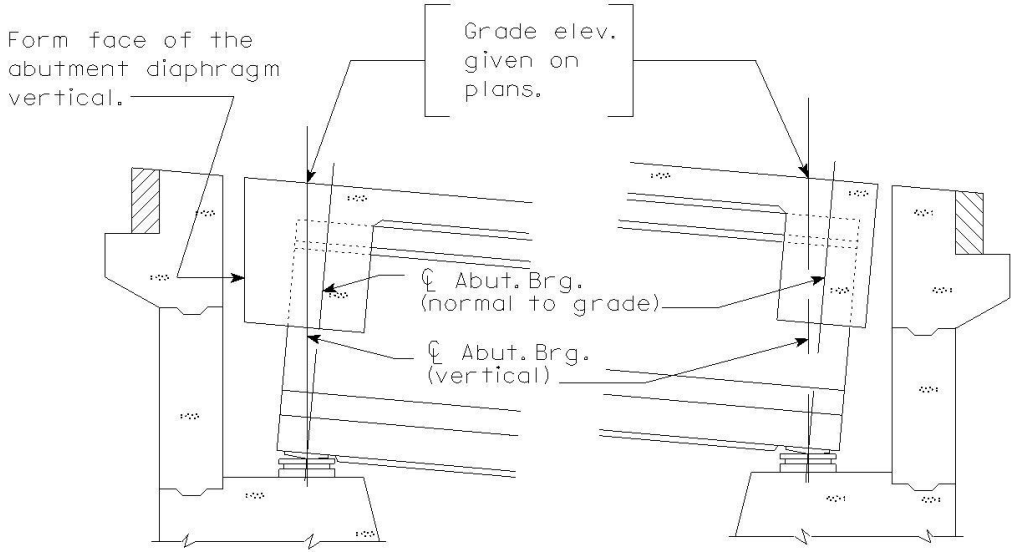

Figure 1.7.2-2. Partial longitudinal section along centerline of roadway at abutments, with grade variations

If there is an expansion joint at a pier, include a partial longitudinal section at the pier, showing centerline of beam bearings vertical and normal to grade as in Figure 1.7.2-3.

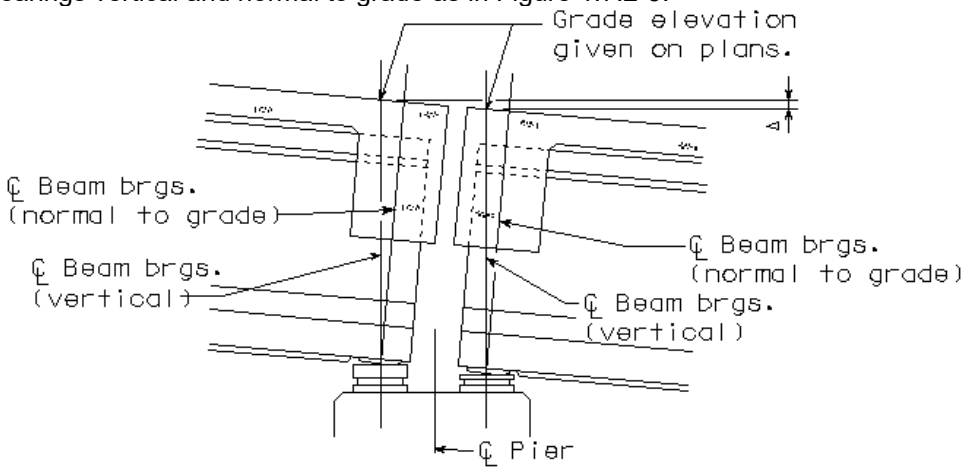

Figure 1.7.2-3. Partial longitudinal section along centerline of roadway at pier, with grade variations

If the change in elevation from the front of the backwall to the centerline of abutment bearing (vertical) or front to back of backwall is greater than 1/8 inch show the dimension as in Figure 1.7.2-4.

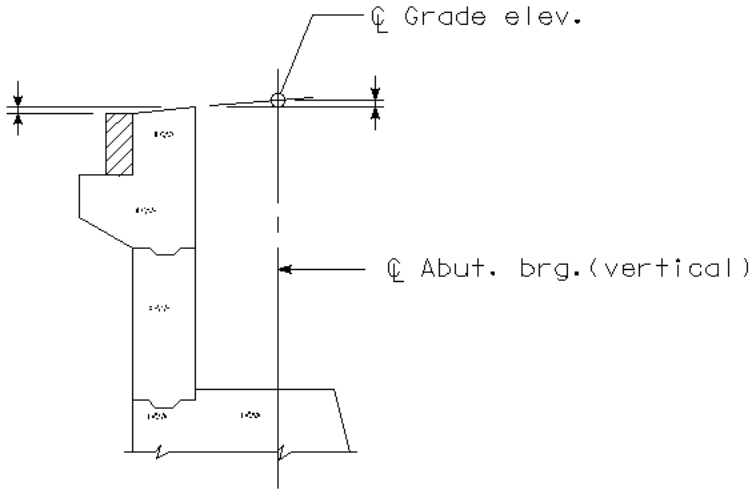

Figure 1.7.2-4. Partial section through abutment

1.7.3 Spiral curve

In order to minimize complicated bridge geometry, the Design Bureau will avoid using spiral curves on bridges [BDM 3.2.6.3.1]. For the unusual case in which the designer needs spiral curve information, it is given in Figure 1.7.3.

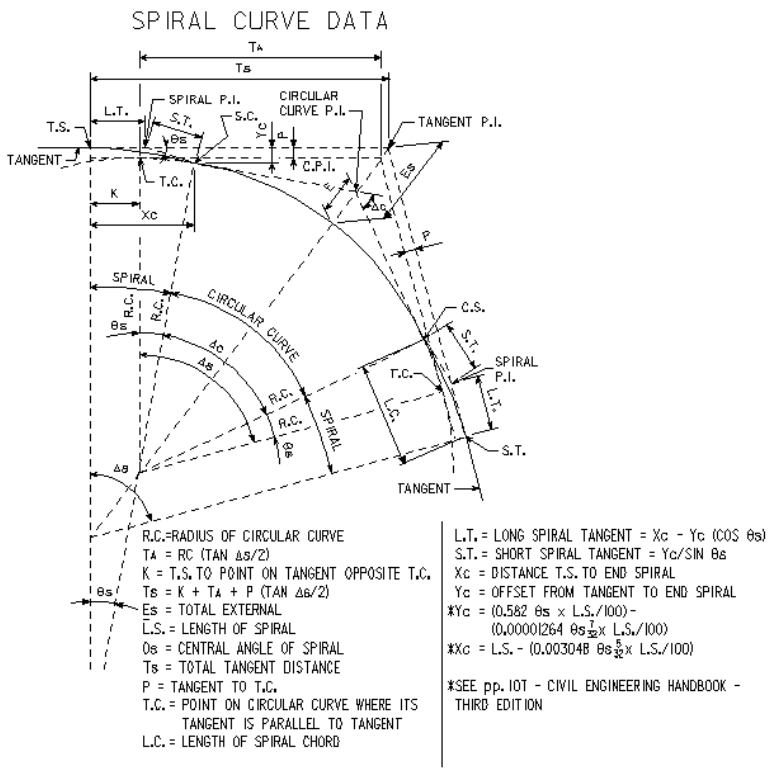

Figure 1.7.3. Spiral curve information

1.8 Bridge plan preparation

Although plans for a bridge are prepared by the Bridges and Structures Bureau or consultants to the Bureau, the plans must be coordinated with other bureaus associated with the project. The bridge will be part of a highway project and thus the bridge plans must fit with plans prepared by the Design Bureau or consultants to that bureau. The flow chart from concept to contract letting for a typical bridge replacement project is given in Section 1D-1 of the Design Bureau's Design Manual (https://iowadot.gov/design/dmanual/01D-01.pdf). When complete, the bridge plans are turned-in to the Contracts and Specifications Bureau and must meet its requirements.

Bridge plans follow standard formats established with the usage of the Bureau's CADD seed files. Guidance for using the seed files is available at: https://iowadot.gov/bridge/tools/CONNECT%20Seed%20Files.pdf Additional resources covering topics such as models, fonts, levels, and features are also available on the CONNECT Applications webpage.

Also, the CONNECT Applications webpage https://iowadot.gov/consultants-contractors/bridges-structures/automation-tools/connect-applications includes instructions for various workflow topics such as:

- Project folder structure in ProjectWise document management software,
- Consultant project folder structure in ProjectWise,
- Using V8i Standards in CONNECT,
- OpenBridge Designer Version Maintenance,
- OpenBridge Designer Analysis Workflow, and
- OpenBridge Designer Starting Model,

Many of the detailed items on bridge plans, such as title block and location map, are covered in documents on the Bridge and Culvert Plan Checklist page (https://iowadot.gov/bridge/Design-Policies/Bridge-and-Culvert-Plan-Checklist).

Generally bridge plans are organized in the sequence indicated in the sub-articles that follow.

1.8.1 Title sheet

See also Plan Review Checklist: 2. Title Sheet – All Projects.

1.8.1.1 Engineers seals

An index of seals is required on the title sheet for each project plan set. For each design type included in the project, such as structural, hydraulic, geotechnical, and roadway, the sheet number containing the seal and designer are listed in the index. When the project is prepared by the Bridges and Structures Bureau, the title sheet shall contain the seal-certification-signature blocks for the responsible structural and hydraulic designers. The responsible designers are defined in Table 1.8.1.1.

Table 1.8.1.1. Designers responsible for sealing structural and hydraulic designs

Design type	Seals to be placed on title sheet	
	Designer licensed as Professional Engineer	**Designer not licensed**
Structural	Designer's seal	Supervising Final Design Unit Leader's seal
Hydraulic	Designer's seal	Preliminary Design Unit Leader's seal

For projects that include signed standard plans (J-series, single RCBC, twin RCBC, triple RCBC, flume box culvert, overhead sign truss, and roadside dynamic message sign support standards), the index of seals additionally shall include the Bridge Engineer's name for structural design of the standards. The index line should read "Bridge (or Culvert or Sign Support) Standards, James S. Nelson, and Structural Design." The line is included in the index of seals on the seed file for a bridge title sheet, and the designer will need to delete the line if it is inappropriate.

1.8.1.2 Traffic data

Traffic data shall be given on a situation plan sheet, and the data or a note regarding the data shall be given on the title sheet. If there is a single bridge design in a project, the traffic data is to be given on the title sheet but, if there are multiple designs, a note is to be given that refers to the individual situation plan sheets for the traffic information.

The traffic information on the bridge title sheet is labeled as “Design Data Rural” or “Design Data Urban”, which matches the way the Design Bureau labels its traffic information. On the situation plan sheet the traffic information is labeled as “Traffic Estimate” and contains the same traffic information as shown on the title sheet.

Both the traffic information blocks and the traffic note referring to individual situation plan sheets are given on the seed title sheet, and the designer should delete the inappropriate items.

1.8.2 First sheet

See also Bridge Plan Review Checklist: 3. First Sheet of Design – All Projects.

1.8.2.1 Bid items and quantities

Bid items and quantities in the table of Estimated Bridge Quantities are determined by the designer, with consideration of the guidelines below, and entered into PPMS when designed by the Bridges and Structures Bureau. The bid items are added to the first sheet with the BidItems application available in MicroStation. The Contracts and Specifications Bureau automatically receives the bid items to prepare the proposal.

The non-structural bid items listed below are added to the Estimate of Quantities in accordance with the following guidelines, which may involve the Bureaus of Design, Contracts, Local Systems, and Construction.

- Flaggers: The Design Bureau will add this item when a Standard Road Plan or a Design Bureau detail is referenced requiring it. Design Bureau will input a quantity of one. The Contracts and Specifications Bureau will then determine the contract period and change the quantity accordingly.

- Pilot Cars: The Design Bureau will add this item when a Standard Road Plan or a Design Bureau detail is referenced requiring it. Design Bureau will input a quantity of one. The Contracts and Specifications Bureau will then determine the contract period and change the quantity accordingly.

- Mobilization: The designer shall include this item in all projects. If the Design Bureau and Bridges and Structures Bureau have a combined project, the bureau creating the title sheet will add this item.

- Field Lab: The Contracts and Specifications Bureau will send the Design Bureau and Local Systems a copy of its criteria for determining when a field lab is required on a project. The Design Bureau will add this item when it is required.

- Field Office: This item will be determined at the field exam. The Design Bureau will add this item if it is necessary.

- Trainees: This item will only be included on state projects. The Contracts and Specifications Bureau will notify the designer 12 weeks before letting (2 weeks before turn-in) of the quantity if it is required. If the Design Bureau and Bridges and Structures Bureau have a combined project, the bureau creating the title sheet will add this item.

- Clearing and Grubbing: The field will send the quantity for this item directly to the designer. This includes area and/or count quantities. This information may be sent any time after field exam and prior to 12 weeks before letting.

- Construction Survey, Location Survey: This item shall be included for all projects involving new and replacement structures (culvert and bridge), deck replacements, and widenings. This item is typically not included for deck overlay projects or other project types, however, there may be exceptions in special circumstances. Culvert projects (excluding culvert repairs) inserted in roadway plans shall also include the Location Survey bid item. The districts can decide to add or delete this bid item from the plan set as needed during plan development.

- Construction Survey - other types (Monument Preservation, Control Point Survey, and Right of Way): The Design Bureau will add these bid items as coordinated with the district land surveyor. The districts can decide to add or delete construction survey bid items from the plan set as needed during plan development. Special circumstances may require any of these bid items to be added to the bridge sheets, such as preservation of a benchmark on bridge rail end section.

- Quality Management - Asphalt (QM-A): The Construction and Materials Bureau will notify the designer when this item is required.

- Railroad Liability Insurance: Upon review of the project concept, the Rail Transportation Bureau will update PPMS indicating if there will be railroad involvement. If a railroad is involved the lead Bureau will add this item.

The Excavation Classification Line elevation, which is used for calculating structural excavation quantities and sets the limits between Class 20 Excavation and Class 21 Excavation, shall be determined as follows.

(1) On the bridge TS&L sheet prepared by the Preliminary Bridge Design Unit the designer should find the average low water elevation and average design streambed elevation.
(2) Determine the elevation of the Excavation Classification Line as the higher of (a) the average low water elevation and (b) the average design stream bed elevation plus one foot.

The method of measurement for structural excavation quantities may be found in IDOT SS 2402.04. The vertical plane boundary dimensions for Class 21 Excavation are not explicitly defined in the Specifications, but are to be indicated in the contract documents per IDOT SS 2402.04, A, 3. Designers shall ordinarily determine quantities for Class 21 Excavation based on the same vertical plane boundary dimensions used for Class 20 Excavation [e.g. IDOT SS 2402.04, B, 2]. The boundaries assumed for Class 21 Excavation shall be indicated in the contract documents, preferably by note in the Bid Item Estimate Reference Information.

1.8.2.2 General notes

Reserved.

1.8.3 Situation plan

See the information provided for preliminary designers in the Preliminary section [BDM 3.2.9] and see Bridge Plan Review Checklist: 4. Situation Plan.

See the information provided for preliminary and final designers in BDM C3.3.4 with respect to additional situation plan requirements for overpass projects involving the BNSF and UP railroads.

BDM 3.7.3.3 and 3.7.3.4 describes the requirements for the development of the berm slope location table (BSLT) and the recoverable berm location table (RBLT) as prepared by the Preliminary Design Unit. The bench at the top of the berm slope is typically set at 3 feet wide and 2 feet above the bottom of the abutment footings. The location and elevation of the abutment footing may vary somewhat between preliminary and final design as the bridge design is refined. The berm terrain model developed by

Preliminary Design does not typically need to be updated by Final Design if the elevation of the abutment footing is only adjusted by ±6 inches or, alternatively, if the abutment centerline station changes by ±18". The designer should consult with the supervising Unit Leader to determine whether an adjustment to the berm terrain is desirable if these limits are exceeded. If an adjustment to the berm terrain model is deemed appropriate the Final Design Unit shall make the adjustments to the Situation Plan and the corresponding tables.

1.8.4 Staking coordinates and staking diagram

Substructure staking coordinates shall be provided in an E-file (BDM 1.14.1) and in a table in the plan set for all new and replacement bridges. Typically, the Iowa Regional Coordinate System (IaRCS) zone in which the structure resides will be the substructure staking coordinate system used. The survey documentation file should list the coordinate system assigned to each project. Substructure staking coordinates are formatted as X (Easting) and Y (Northing). Three sets of coordinates shall be provided for each substructure unit. The coordinates shall be taken along the centerline of a substructure unit at the centerline of approach roadway and each edge of the deck. Instructions for producing substructure staking coordinates can be found at https://iowadot.gov/consultants-contractors/bridges-structures/automation-tools/final-design-software.

The designer shall provide a staking diagram for the following types of bridge projects:

- Dual bridges on interstate or other four-lane primary roads,
- Bridges with special widths for climbing lanes, sidewalks, or shared use paths,
- Tapered bridges,
- Other straight bridges for which "centerline of approach roadway" does not coincide with centerline of bridge roadway, and
- Bridges along curved alignments.

For straight bridges the "centerline of approach roadway" is the primary staking control. To avoid confusion, the centerline of bridge roadway shall not be shown on the staking plan. The designer should designate the bridge centerline as "centerline of bridge" and dimension the offset from "centerline of approach roadway". The designer may show the "centerline of profile grade" but shall not reference it to "centerline of approach roadway".

For horizontally curved bridges the primary control line is a chord baseline defined at each end by the intersection of the centerline of the abutment and centerline of approach roadway or approach baseline.

The staking diagram should show dimensions from "centerline survey" or "centerline approach roadway" to the following:

- Centerline of abutment footings and pier footings,
- Outside limits of abutment footings,
- Gutterline location at abutments, and
- Centerline of P10L pier locations.

The designer also shall show non-zero skew angles of abutments and piers.

See also Bridge Plan Review Checklist: 5. Staking Diagram – New Construction.

1.8.5 Substructure general

See Bridge Plan Review Checklist: 6. Substructure – General – New Construction.

1.8.6 Pier details

See the detailing information provided for final designers in the Piers section [BDM 6.6.4] and see Bridge Plan Review Checklist: 7. Pier Details – New Construction.

1.8.7 Abutment details

See the detailing information provided for final designers in the Abutments section [BDM 6.5.4] and see Bridge Plan Review Checklist: 8. Abutment Details – New Construction.

1.8.8 Superstructure general

See Bridge Plan Review Checklist: 9. Superstructure Details – General – New Construction.

1.8.8.1 CWPG

See the detailing information provided for final designers in the Steel Girders and Beams section [BDM 5.5.1.4.2] and see Bridge Plan Review Checklist: 10. Superstructure Details – CWPG – New Construction.

1.8.8.2 PPCB

See the detailing information provided for final designers in the Pretensioned Prestressed Concrete Beams section [BDM 5.4.1.4.2] and see Bridge Plan Review Checklist: 11. Superstructure Details – PPCB – New Construction.

1.8.9 Repair/overlay details

See the information provided for final designers in the Bridge and Culvert Repair section [BDM 12.1.9.1] and see Bridge Plan Review Checklist: 12. Details – Repair/Overlay Projects.

1.8.10 Miscellaneous details

Reserved.

1.8.10.1 Barrier rails

See the information provided for final designers in the Railings section [BDM 5.8.1] and see Bridge Plan Review Checklist: 13. Barrier Rail.

1.8.10.2 Expansion devices

See the information provided for final designers in the Expansion Joints section [BDM 5.8.3] and see Bridge Plan Review Checklist: 14. Expansion Device.

1.8.10.3 Subdrains

See Bridge Plan Review Checklist: 15 Subdrain/Slope Protection Details.

1.8.10.4 Slope protection

See Bridge Plan Review Checklist: 15 Subdrain/Slope Protection Details.

1.8.10.5 Lighting

See Bridge Plan Review Checklist: 16. Lighting Details.

1.8.10.6 Approach sidewalk

See Bridge Plan Review Checklist: 18. Approach Sidewalk.

1.8.10.7 Other

Reserved.

1.8.11 Aesthetics

See Bridge Plan Review Checklist: 17. Aesthetics.

1.8.12 Soils sheets

For bridge and culvert projects one or more soil profile sheets will be provided by the Soils Design Unit of the Design Bureau, and any additional sheets should be placed in the plan set after the last structural design sheet.

1.8.13 Roadway plans

For a typical bridge or culvert project one or more roadway sheets will be provided by the Design Bureau. If needed the roadway sheets will include the traffic control plan. The first roadway sheet will have an engineer's seal-certification-signature block for the roadway design, and the sheet and any additional sheets should be placed in the plan set after the last geotechnical design sheet.

See also Bridge Plan Review Checklist: 19. Roadway Plans.

1.8.14 Signed standard plans

Projects that include signed standard plans (J-series, single RCBC, twin RCBC, triple RCBC, flume box culvert, overhead sign truss, and roadside dynamic message sign support standards), shall include the signed sheets, referenced on the Title Sheet in the English Standard Bridge Plans table, in a multi-page PDF file to a subfolder in the Contracts plan turn-in folder.

1.9 Culvert plan preparation

Although plans for a culvert are prepared by the Bridges and Structures Bureau or consultants to the Bureau, the plans must be coordinated with other bureaus associated with the project. The culvert will be part of a highway project and thus the culvert plans must fit with plans prepared by the Design Bureau or consultants to that bureau. When complete the culvert plans are turned-in to the Contracts and Specifications Bureau and must meet its requirements.

Culvert plans follow standard formats, and the design technician is required to start with the Bureau's CADD seed files at: https://iowadot.gov/bridge/tools/CONNECT%20Seed%20Files.pdf. Additional resources covering topics such as models, fonts, levels, and features are available on the CONNECT Applications webpage.

Also, the CONNECT Applications webpage includes instructions for various workflow topics such as:

- RCB Culvert Design Workflow,
- Project folder structure in ProjectWise,
- Consultant project folder structure in ProjectWise, and
- Using V8i Standards in CONNECT.

Many of the detailed items on culvert plans, such as title block and location map, are covered in the Culvert Plan Review Checklist on the Bridge and Culvert Plan Checklist page (https://iowadot.gov/bridge/Design-Policies/Bridge-and-Culvert-Plan-Checklist). For general plan items see Culvert Plan Review Checklist: 1. General – All Projects.

Generally, culvert plans are organized in the sequence indicated in the sub-articles that follow.

1.9.1 Title sheet

See the discussions of engineers' seals and traffic data for bridge projects [BDM 1.8.1.1 and 1.8.1.2] and Culvert Plan Review Checklist: 2. Title Sheet – All Projects.

1.9.2 First sheet

See the discussion of quantities [BDM 1.8.2.1] and Culvert Plan Review Checklist: 3. First Sheet of Design – All Projects.

1.9.3 Situation plan

See Culvert Plan Review Checklist: 4. Situation Plan.

1.9.4 Repair/extension project details

See Culvert Plan Review Checklist: 5. Details – Repair/Extension Projects.

1.9.5 Reinforced concrete

See Culvert Plan Review Checklist: 6. RCB Culverts.

1.9.6 Roadway plans

See Culvert Plan Review Checklist: 7. Roadway Plans.

1.9.7 Signed standard plans

Projects that include signed standard plans (J-series, single RCBC, twin RCBC, triple RCBC, flume box culvert, overhead sign truss, and roadside dynamic message sign support standards), shall include the signed sheets, referenced on the Title Sheet in the English Standard Culvert Plans table, in a multi-page PDF file to a subfolder in the Contracts plan turn-in folder.

1.10 Sign support structure plan preparation

Projects that include overhead bridge-type sign truss standard (SOST-11) sheets, overhead cantilever-type sign truss standard (SCST-17) sheets, and roadside dynamic message sign support standard (RDMS-13) sheets typically reference the applicable signed standard sheets in a tabulation on plans developed by the Traffic and Safety Bureau. Review of standard sign support structure designs by the Bridges and Structures Bureau for specific Traffic and Safety Bureau projects is required if any of the design parameters (e.g., maximum sign height, maximum total sign area, horizontal and vertical sign offset) exceeds the allowable values shown on the signed standard sheets.

When design plans for custom sign support structures are prepared by the Bridges and Structures Bureau or consultants to the Bureau, the plans must be coordinated with the Traffic and Safety Bureau. The sign support structures will be part of a traffic signing project and thus the sign support structure plans must fit with plans prepared by the Traffic and Safety Bureau or consultants to that bureau. When complete, the sign support structure plans are turned-in to the Contracts and Specifications Bureau and must meet its requirements.

1.11 Quality Control/Quality Assurance Plan

The Quality Control/Quality Assurance (QC/QA) Plan describes the methodology and procedures by which the Iowa DOT ensures in-house produced new bridge designs are in accordance with nationally recognized design policies, are independently checked, and are reviewed. The QC/QA Plan will document the checking and review process and produce a verifiable record [BDM 1.11.5, C1.11.5] to show that the QC/QA process was followed during the project. The QC/QA process enhances plan quality by doing the following:

- Providing uniformity and consistency in the development of plans,
- Ensuring compliance with Iowa DOT policies, procedures, and standards,
- Minimizing plan errors and discrepancies,
- Ensuring proper coordination between other partners in the design process,
- Minimizing plan changes after project is turned-in to the Contracts and Specifications Bureau, and
- Improving project constructability and bid ability.

1.11.1 Design team

The Design Team typically consists of a designer, design technician, checker, and Transportation Engineer Manager (TEM). The engineer of record (EOR) will be a licensed Professional Engineer in the State of Iowa and will sign the design plan documents. The preference would be to have the designer as

the EOR; however, the EOR could be the designer, checker, or TEM depending on the makeup and qualifications of the team members. The Design Team makeup is at the discretion of the TEM based on project complexity, design elements, and use of pre-engineered standards. This discretion relates directly to the risk involved in errors associated with various aspects of the design plan.

1.11.2 Plan preparation tools

Design plans shall be developed in accordance with the AASHTO LRFD Bridge Design Specifications and the Iowa DOT Bridge Design Manual (BDM). The BDM consists of standard design practices approved by the bridge engineering staff for use in design plan preparation. The BDM is maintained by the Methods Unit and Policy Group who meet periodically to discuss design issues and document Bureau policy for use by in-house staff and consultants. In addition the BDM provides a listing of notes, along with commentary, which can be incorporated into the final design plans.

Other items available to the designer and design technician to aid in the plan development are Standard Plan Sheets, Signed Standard Plans, and plan development check lists [BDM 1.8]. The designer must also be aware of the requirements documented in the Iowa DOT Standard Specifications for Highway and Bridge Construction, Developmental Specifications, Special Provisions, checklists, Design Manual developed by the Design Bureau, Construction Manual developed by the Construction and Materials Bureau, and the Instructional Memorandums (IM) developed by the Construction and Materials Bureau.

The Bureau maintains locally developed spreadsheets for use in design [BDM 1.13] as well as libraries and automation tools for use with MicroStation [BDM 1.8]. The Bureau also maintains licenses for commercial bridge design software packages [BDM 1.13].

1.11.3 Quality control

Quality control is the responsibility of the designer, design technician, and checker. These project team members shall use the tools noted above to develop a project design plan. Responsibility of each team member is listed below. Team members shall work independently to perform their roles and then communicate/discuss issues based on their understanding of the Bureau policy in order to arrive at a mutually acceptable design. Discussions may involve the Bridge Engineer, Bridge Project Development Engineer, Chief Structural Engineer, Methods Engineer, Transportation Engineer Manager, or other key staff in the Bridges and Structures Bureau. Resolution of design issues should be documented in the engineer’s design calculations and checklists.

1.11.3.1 Designer

The designer will be responsible for development and assembly of the structure plans. This includes listening to the concerns of the design technician and checker involving perceived problems with the plans and making decisions as to the appropriateness of the concerns. If the designer is not the EOR, or the QA review identifies issues for resolution, the final decision could be made by others associated with the project. Steps in the project development process include:

- Verify the type, size, location, grade, and geometrics of the proposed structure in order to confirm correct clearances, span arrangements, and proposed structure type.
- Identify Standard Plan details and appropriate Signed Design Standards to be used in the design plan.
- Review the BDM and all related specifications pertaining to the type of structure being built.
- Design all structural components, or use appropriate standards and provide information concerning special details needed for the structure to adequately relay the conceived design to the detailer. Documentation of all computations including computer generated data shall be available for the file.
- Specify all components by size and material.
- Review all sheets submitted by other bureaus for inclusion into the final project plans.
- Finalize plans by verifying details and notes.

Optional information to be provided by the designer:

- Calculate all quantities. Documentation of all computations including computer generated data shall be available for the file.
- Provide sketches and notes needed for the proposed structure.
- Fill in all missing data on applicable Standard Plan sheets.

1.11.3.2 Design technician

The design technician will be responsible for verifying the application of proposed components of the plan. This includes bringing perceived errors and omissions to the attention of the designer and the following:

- Review the type, size, location, grade and geometrics of the proposed structure to understand the aspects of the project.
- Compile all necessary notes, Standard Design sheets, and additional special details needed to assemble a set of design plans.
- Detail the proposed structure by typing or importing any nonstandard notes, attaching the related standard notes, completing the Standard Design sheets, and adding additional special detail sheets as the project requires [BDM 1.8].
- Calculate or verify elevations. Calculate the rebar number, weights/mass, and lengths based on given splices or development lengths.

Optional information to be provided by the design technician:

- Develop the notes and special details needed to complete a set of design plans based on verbal communication from the designer.
- Calculate bid item quantities. Documentation will be available for the file.

1.11.3.3 Checker

The checker will be responsible for adequacy of all structural components and overall plan intent. This includes making the designer and design technician aware of perceived problems in the design plans and the following:

- Review the design plans for completeness, consistency, and constructability according to standard design, detailing, and construction practice.
- Review the BDM and all related specifications pertaining to the type of structure being built.
- Analyze all structural components to verify the proposed structure is properly designed. Analysis shall be performed independently of any design calculations prepared during the initial design. Original design assumptions can be supplied by the designer however the checker will make an independent decision concerning the validity of the design assumptions. Documentation of all computations including computer generated data shall be available for the file.
- Verify all components by size and material.
- Verify all notes and specifications.

Optional information to be provided by the checker:

- Calculate all bid item quantities. Documentation shall be available for the file.

1.11.4 Project documentation

The Bridges and Structures Bureau is moving to an entirely electronic (i.e. paperless) system with respect to all project documentation. The older system which involved storing material in yellow manila paper file envelopes is no longer being supported. Additional information about electronic storage locations and Asset ID generation is found in BDM C1.11.4.

Projects in the Bridges and Structures Bureau typically are identified with a project file number, design number, program improvement number (PIN), and a project number. These numbers are assigned during the preliminary engineering process.

All projects involve assets such as bridges, bridge-size culverts, culverts, sign trusses, noise walls, etc. Every asset will be assigned an Asset ID in the Road Asset Management System (RAMS) when a project is initiated if an Asset ID does not already exist. FHWA numbers are used as Asset IDs for bridges and bridge-size culverts. Other structure types utilize Asset IDs as described in supplementary documentation which is currently under development. All Asset IDs generated in RAMS will be available in the Structure Inventory and Inspection Management System (SIIMS). All assets in SIIMS will be linked to an Asset ID subfolder in the ProjectWise document management system. (There is no need to place duplicate files in SIIMS if they are already contained under the Asset ID subfolder in ProjectWise since the information will be linked to SIIMS.) An Asset ID subfolder will be created in ProjectWise when a project is initiated if an Asset ID subfolder does not already exist. Each new project for an asset will have a phase number subfolder under the Asset ID subfolder for that asset. Each phase number subfolder will have additional subfolders for various project documentation such as design plans, as-built plans, file envelope correspondence, load rating information, pile logs, shop drawings, falsework plans, erection plans, etc. All the information in these subfolders will be automatically transferred for storage in the Electronic Records Management System (ERMS) at project completion.

The File Envelope Correspondence subfolder in ProjectWise should contain the following information (previously placed in the yellow manila paper file envelopes), as applicable:

- Project concept
- Structure type, size, and location (TS&L)
- Preliminary project cost
- Design Criteria sheet
- Design calculations
- Environmental documentation
- FHWA clearances
- Project correspondence

The following checklists are provided for review of bridge and culvert designs prepared by consulting engineers and by Bureau staff (available on the Internet at https://iowadot.gov/bridge/Design-Policies/Bridge-and-Culvert-Plan-Checklist):

- Bridge Plan Review Checklist
- Culvert Plan Review Checklist
- CADD Review Checklist

The EOR will be responsible for maintaining and submitting a complete project design file upon completion of the design process. This information along with the contract design plans and specifications will be submitted to the TEM for final review and submittal to the Contracts and Specifications Bureau for letting.

The EOR shall place their entire final set of design calculations in the appropriate subfolder in ProjectWise. The design calculations shall, at a minimum, include all structural calculations which may involve software input files, software output files, spreadsheets, and hand calculations. Designers may, but are not required to, include non-structural calculations such as quantity calculations and elevation calculations. In general, designers should avoid placing intermediate or iterative sets of design calculations in this subfolder in order to avoid clutter. Designers shall include a title page document which describes the files being stored in the subfolder. The title page also shall include the information shown in BDM C1.11.5. Files generally shall be stored with descriptive file names. Projects which do not involve structural design calculations need not include any calculations in the subfolder.

1.11.5 Quality assurance

Upon project assignment to the TEM for final design, the manager shall select a Design Team to prepare the final contract documentation for letting. The Design Team members will be assigned based on complexity of the project, member experience, and available staffing. The TEM will be responsible for mediating and resolving issues presented by team members for resolution. The TEM shall be made

aware of and concur with all instances where the design deviates from approved Bureau standards and policies.

Upon completion of the project and presentation to the TEM for submittal to the Contracts and Specifications Bureau for letting, the TEM shall review the file documentation for completeness and review the plans for overall conformance to Bureau policy. The project plans will then be distributed to other Iowa DOT bureaus, the appropriate district, and the FHWA (when required) for comment. Any comments received shall be reviewed with the EOR for necessary changes to the plan.

The TEM will review the Quality Control/Quality Assurance Record [BDM C1.11.5] stored by the EOR as a title page document as described in BDM 1.11.4. This record shall include the basic project information along with the signatures of the project designer, design technician, checker, and TEM.

The TEM shall then submit the final plans and specifications to the Contracts and Specifications Bureau.

1.11.6 Post-letting involvement

After letting, a member of the Design Team will be responsible for the review on any working drawings required for the project [BDM 1.17]. In addition, any structural design issues will be directed to the Design Team by the Construction and Materials Bureau for resolution.

On occasion, the Design Team members will conduct field reviews for observation and discussion of specific design/construction issues. Information gathered during these reviews that highlights inconsistencies with current bridge design policy will be documented and shared with the Bridge Methods Engineer for resolution of policy issues.

If revisions to the design plans are required after the letting due to a change in site conditions assumed in the design preparation or an error found in the original design plans, the Design Team will develop a formal revision to the design plans. Documentation of the revision shall be in accordance with current policy for issuing plan revisions. The EOR (if available) will be responsible for the revision documentation and placing it in ProjectWise. The TEM and EOR will be responsible for noting these revisions on the Quality Control/Quality Assurance Record. In addition, revision documentation will be sent to the FHWA when applicable.

1.12 Cost estimates

Final designers in the Bureau and consulting designers shall prepare construction cost estimates as follows.

(1) Verification of preliminary bridge costs (B01 preliminary design cost estimate) based on concept information. For a project with a consultant engineer this verification is performed by the BSB Consultant Coordination Unit.
(2) Concept (B00) Estimate - Cost estimate for projects where Final Design writes the project concept (e.g. overlays, MB and bridge repair projects).
(3) 50 Percent Plans Estimate - Update bridge and large project ($500,000 or more) construction costs based on rough bid item quantities after completion of design and before final detailing and checking is complete.
(4) B03 or B04 Estimate - Update of design costs based on final bid item quantities prior to final plan turn-in.
(5) Annual Estimate - Upon request from the supervising Unit Leader, perform a cost estimate if the existing cost estimate is greater than 6 months old for project programming review purposes.

B00 and B01 cost estimates are typically parametric costs estimates based on the design parameters (e.g. unit cost per square foot of deck area for a particular bridge type). 50 percent plans, B03 and B04 cost estimates are bid-item based estimates.

Currently the Iowa DOT is operating both in PPMS and in iPDWeb. The highway program is being managed using PPMS. Because of this the following approach for cost estimating is required:

- Estimate construction cost in iPDWeb (present day dollars). Account for all anticipated costs with one or more of the following: bid items, parametric items, and percent based bid items. Instructions for accessing and using the iPD software are available at https://iowadot.gov/bridge/programs/iPDWeb%20Project%20Cost%20Estimating%20for%20OBS.pdf. Consult BDM 3.8 and 4.5.11 for additional guidance on B00 and B01 cost estimates for bridges and culverts, respectively.
- Enter the cost developed from iPDWeb into PPMS. The Consultant Coordination Unit will enter iPDWeb costs into PPMS for consultants. Choose the programmed fiscal year for the project in PPMS. PPMS will automatically apply a 4.5 percent inflation rate per year. Enter contingency into PPMS per the rubric in BDM 3.8 and 4.5.11.

The designer shall report the cost estimates to the supervising Unit Leader, who will compare each estimate with previous estimates in PPMS.

1.13 Software

Some of the software used by the Iowa DOT to design bridges and culverts and to prepare plans is available through the Automation Tools section of the Bridges and Structures Bureau web site (https://iowadot.gov/bridge). The Bridge Information System (BRIS) application, which can only be accessed by Iowa DOT employees, is available on the Iowa DOT website at (https://secure.iowadot.gov/bris/). Commercial software also is installed separately on workstations or is available through a network shortcut under license agreements. Engineering consultants are responsible for downloading Iowa DOT software and obtaining licenses for commercial software as needed.

The Iowa DOT requires that all plans be prepared with MicroStation software. Additionally, the Highway Administration has agreed-upon CADD standards (fonts, seed files, level attributes, libraries, and other standards) for use of the software. The Bridges and Structures Bureau rules for applying these standards are given in the files hyperlinked on the Bureau's web site CONNECT Applications documentation page (https://iowadot.gov/bridge/Automation-Tools/CONNECT-Applications). The designer and design technician should consult the page for all information regarding the use of MicroStation.

For projects that involve repair, extending, widening, demolition, or other work involving existing structures, the designer needs access to inspection reports and other information about the structures. This information is available through SIIMS, for which the user needs an Enterprise A&A ("A&A" = "Authentication and Authorization") account. Bureau personnel automatically have an account, but engineering consultants must obtain an account through the instructions given on the main page of the application (https://siims.iowadot.gov/default.aspx).

Hydraulic design programs developed by the Bureau are available from the Preliminary Design software web page (https://iowadot.gov/bridge/Automation-Tools/Preliminary-Design-Software).

BRIS is an Oracle database program with a web-based user input interface, which houses an inventory of bridge project work that can be queried. The primary benefit of BRIS for many designers and detailers is the ability to search for previously designed bridges, culverts, and other highway structures so that standard Bureau practices are followed and details are reutilized effectively. The designer is required to enter the BRIS data for a project with an assigned design number when design is completed. Data collection information is given in the BRIS Manual accessible from the start-up page for the program.

Final design software developed by the Bureau is available from the Final Design software web page (https://iowadot.gov/bridge/Automation-Tools/Final-Design-Software).

BIAS 2000 is software for consultant use developed by the Iowa DOT for contracting state and local projects.

1.14 Plan turn-in

A list of critical dates associated with each contract letting other than dates for the FHWA review submittal and D04 event is maintained by the Contracts and Specifications Bureau (https://iowadot.gov/contracts/lettings/CRITDATE.pdf?ver=2018-01-25-141506-297). The plan turn-in date for a specific project is established in the Bureau by the Bridge Project Development Engineer and by design contract with engineering consultants. On or before that date the following are to be submitted to the Contracts and Specifications Bureau.

- Completed project plan set (pdf),
- Standard Plans (pdf) when applicable,
- Non-contract E-files when applicable,
- Completed bid item list in PPMS, and
- Final cost estimates for both Bridge and Roadway items in PDF format from iPDWeb. At plan turn-in or the B04 event, the BSB Final Design Unit or Consultant Coordination Unit reviewer shall copy the file to the appropriate letting subfolder at this location W:\Highway\Contracts\CostEstimates. The file naming convention is “Contract ID_DesignEvent Cost Estimate.pdf” (e.g., 50-0144-067_B03 Cost Estimate.pdf).

Plans for FHWA oversight projects are to be sent to the Iowa office of the Federal Highway Administration (FHWA) for review. Final or 100 percent unapproved plans for review should be sent to FHWA 3 to 6 weeks before the Contracts and Specifications Bureau’s turn-in date. The 3 to 6-week period allows FHWA personnel to return comments to be addressed before turn-in.

The project plan set may include both grayscale and color multi-page PDF files, as well as a multi-page cross section PDF file. The Design Bureau *Design Manual* gives the latest detailed instructions for preparing the project plan set [DB DM 1H-1 and 21E-4].

Any Special Provisions (.doc or .docx) required by the plan set are to be submitted to the Specifications Section. All applicable Developmental Specifications and Special Provisions for the project shall be applied in PPMS prior to plan turn-in.

Consultants are required to submit the items listed above to the Bridges and Structures Bureau for review 2 weeks before plan turn-in as discussed in *Conducting Business with the Iowa DOT Bridges and Structures Bureau* [BDM 1.4].

The Contracts and Specifications Bureau reviews the proposed contract documents and may ask for revised plan sheets. After the review and any changes, the Bridges and Structures Bureau updates the final MicroStation CADD file and PDF plan set.

The supervising Unit Leader or appointed Consultant Reviewer is responsible for the following at or before plan turn-in:

- Turning in the final BSB combined multi-page PDF plan set to the Contracts and Specifications Bureau.
- Verifying that the final BSB combined multi-page PDF plan set contains the appropriate PDF files from the Design Bureau including the Soils Design Unit.
- Copying the combined multi-page PDF plan set to the Contracts plan turn-in folder.
- Copying a separate multi-page PDF file containing any signed sheets or standard plans referenced on the design plan set title sheet into a subfolder in the Contracts plan turn-in folder.
- Marking the Cost Estimate complete in iPDWeb.
- Copying the final cost estimates for Bridge and Design into the Contracts cost estimate folder.
- Requesting in PPMS the use of applicable Developmental Specifications and Special Provisions.
- Inputting the B03 or B04 date, project coordinates, and cost estimates into PPMS.

The sub-articles below describe the items that shall be completed by the designer in the weeks leading up to plan turn-in. The Design Team is responsible for the completion of all items in the sub-articles.

1.14.1 E-file submittals

E-file submittals can consist of Digital Contract Files (DCF) and Electronic Support Files (ESF). Currently all BSB E-files shall be submitted as ESF since all are non-contract files. The following ESF E-file submittals are required when appropriate:

- Bridge and culvert repairs
  - Existing plans
  - Signed standards
  - Asbestos test report when asbestos is known to exist
- RCB culverts
  - Existing culvert plans
  - Signed culvert standards
  - Asbestos test report for existing structure regardless of presence
- CCS bridges
  - Existing bridge plans
  - Signed bridge standards
  - Top-of-slab elevations spreadsheet
  - Substructure staking coordinates
  - Boring logs only (not full S04 report)
  - Asbestos test report for existing structure regardless of presence
- PPCB bridges
  - Existing bridge plans
  - Top-of-deck elevations spreadsheet
  - Bridge deck grade adjustment spreadsheet
  - PPC beam data spreadsheet
  - Substructure staking coordinates
  - Boring logs only (not full S04 report)
  - Asbestos test report for existing structure regardless of presence
- Steel girder bridges
  - Existing bridge plans
  - Top-of-deck elevations spreadsheet
  - Bridge deck grade adjustment spreadsheet
  - Substructure staking coordinates
  - Boring logs only (not full S04 report)
  - Asbestos test report for existing structure regardless of presence

The file naming convention for Microstation V8 E-files can be found at https://iowadot.gov/consultants-contractors/bridges-structures/automation-tools/connect-applications in the “Bridge Project Folder Structure” and “Consultant ProjectWise Bridge Folder Structure” documents. The file naming convention for MicroStation CONNECT E-files can be found at the same location.

Substructure staking coordinates and the instructions for producing them are discussed more fully in BDM 1.8.4 and at https://iowadot.gov/consultants-contractors/bridges-structures/automation-tools/final-design-software.

1.14.2 Plan coordination

For bridge replacement projects the Design Bureau has prepared a flow chart for its work that includes the defined events in the design process and plan turn-in [DB DM 1D-1]. The flow chart and its associated task lists indicate what the bridge designer can expect from the Design Bureau when the Bridges and Structures Bureau has the lead for a project.

When the Bridges and Structures Bureau does not have the lead, plans provided to another bureau, such as retrofit rails for Design Bureau projects, need to be submitted by the scheduled B04 event date. When the Bridges and Structures Bureau does have the lead it also can expect that plans from other bureaus, such as the geotechnical design sheets and roadway design sheets, are available by the scheduled event date (S04 and D04).

When receiving plan sheets from another bureau the Design Team shall, at a minimum, verify the following:

- Every sheet has the project number and file number printed on it.
- The information on the plans is consistent with the BSB design plans.
- For plans that include approach pavement, the appropriate abutment designation (M for movable and F for fixed) is indicated. Integral abutments and semi-integral abutments are considered moveable because they will move against and away from the approach pavement when the bridge expands and contracts. Stub abutments are considered fixed because the stub abutment backwall does not move with respect to the expansion and contraction of the bridge.

For projects that are tied in the Contract letting process, the Design Team should work carefully with the Design Bureau to coordinate the plan sets. Work items such as longitudinal grooving, guardrail, bridge berm grading, culvert backfill, and the Prevention Pollution Plan are often located in a separate plan set associated with the Project Contract and need to be tied with a plan note referencing the project number of the other project.

1.14.3 Prior to plan turn-in

The Design Team is responsible for completing the following items a minimum of three weeks before plan turn-in:

- Obtain the final D04 road sheets and S04 soil sheets for BSB led projects.
- For both review (i.e., 100 percent unapproved) and final plan sets, combine the PDF file(s) from the Design Bureau (including the Soils Design Unit) with the BSB PDF file and place the combined multi-page PDF file in the appropriate design event subfolder (e.g., B03, B04) under the Design Events subfolder under the Bridge subfolder in the appropriate ProjectWise project directory (e.g., pw:\\NTPwint1.dot.int.lan:PWMain\Documents\Projects*ProjectDirectory*\Bridge\Design Events*DesignEvent*). Also place applicable standard plans and E-files in the appropriate subfolders under the design event subfolder. The Unit Leader will route the review plans and final plans to the appropriate bureau and district personnel.
- Complete the electronic BRIS form that is accessible at https://secure.iowadot.gov/bris/. This form is initiated automatically at the B03 or B04 event date; therefore, the design engineer or technician will wait until after plan turn-in to complete the BRIS form.
- Verify the Design Criteria sheet is complete for all new and replacement bridges. Place a copy in the Final Design subfolder under the appropriate phase (i.e., project) subfolder under the appropriate Asset ID subfolder in ProjectWise (e.g., pw:\\NTPwint1.dot.int.lan:PWMain\Documents\Highway\Bridge\Assets\Bridges and Culverts*AssetID**Phase*\File Envelope Correspondence\Final Design).
- Verify that PPMS bid items are complete [BDM 1.14.4].
- Verify that the Bridge 2000 documentation is completed for new and replacement bridges and bridge-sized culverts.
- Create a Load Analysis and Rating System (LARS) input file for new and replacement bridges. Place both the .txt and .xls versions of the LARS input file in the Load Rating subfolder under the appropriate phase (i.e., project) subfolder under the appropriate Asset ID subfolder in ProjectWise (e.g., pw:\\NTPwint1.dot.int.lan:PWMain\Documents\Highway\Bridge\Assets\Bridges and Culverts*AssetID**Phase*\Load Rating). Input file creation may be postponed if necessary, but must be completed before the construction work is finished.
- For minor bridge repairs or rehabilitation projects (e.g., retrofit rails, deck overlays, and deck replacements), email a link of the plan set to the Bridge Rating Engineer, to be used for modification of the LARS file.
- For bridge repairs that modify the superstructure design (e.g., beam replacements or other major bridge rehabilitation projects), create a new LARS input file and follow the procedure above corresponding to new bridges.
- Complete the B03 or B04 cost estimate in iPDWeb and place a PDF report in the Cost Estimate subfolder under the Contract ID subfolder under the design event subfolder under the Design

Events subfolder under the Bridge subfolder in the appropriate ProjectWise project directory (e.g., pw:\\NTPwint1.dot.int.lan:PWMain\Documents\Projects*ProjectDirectory*\Bridge\Design Events*DesignEvent**Contract ID*\Cost Estimate).

- Fill out the Bridge Plan Review Checklist for bridges, the Culvert Plan Review Checklist for culverts, and the CADD Review Checklist.
- Place all applicable E-files in the *ContractID*_eFiles_(Bridge) subfolder under the design event subfolder under the Design Events subfolder under the Bridge subfolder in the appropriate ProjectWise project directory (e.g., pw:\\NTPwint1.dot.int.lan:PWMain\Documents\Projects*ProjectDirectory*\Bridge\Design Events*DesignEvent**ContractID*_eFiles_(Bridge)).
- If time permits, the design technician should complete maintenance sketches for new and replacement bridges/bridge size culverts for review by the Assistant Maintenance Engineer.

1.14.4 PPMS bid items for plan turn-in

The BSB Design Team or appointed Consultant Reviewer are responsible for inputting the correct bid items shown in the BSB project plans under the correct bid divisions. BSB staff can enter bid items into PPMS. Where BSB is the lead bureau (B03 plans), bid items for sheets submitted to BSB by other bureaus (Design Bureau or Districts) are to be input by those bureaus under separate division(s) after the BSB bid division. For B04 plans, BSB should enter all bid items for the project under the BSB bid division after the other divisions.

The Contracts and Specifications Bureau will use the PPMS bid items and quantities for the proposal; therefore, it is critical that the bid divisions in PPMS are accurate. The lead bureau turning in the project plans is responsible for ensuring all the bid item divisions are in the correct order by the day of plan turn-in to the Contracts and Specifications Bureau.

1.15 Plan changes after plan turn-in

Although it is expected that most plan sets will be in final condition at turn-in, there are provisions for changes. These procedures for making plan changes are listed and maintained by the Contracts and Specifications Bureau in the document “Plan Changes and Addendums”. (https:/iowadot.gov/contracts/electronicplanspecs/Plan_Changes_and_Addendums_Contracts.pdf)

1.15.1 Plan changes prior to advertising

The Contracts and Specifications Bureau accepts plan changes, without an addendum, just prior to the time the project is advertised. This is typically two weeks after turn-in or an agreed upon timeframe. The lead Bureau (Contracts Plan Submitter) that was responsible for plan turn-in shall also be responsible for communicating the intent of the plan changes and submitting the plan changes to the Contracts and Specifications Bureau.

1.15.2 Plan Changes after advertising - Addendum

After plans have been advertised, corrections to the plans require an addendum so that all project bidders are informed of the changes. For an addendum, a request to issue an addendum must be sent to the Contracts and Specifications Bureau proposal engineer. The Contracts and Specifications Bureau decides whether the change or error correction warrants an addendum or a revision. Addendum requests may also be originated by the Contracts and Specifications Bureau if an error correction or change is required to let the project. If the designer of BSB is not the Contracts Plan Submitter, the designer who submitted the plans must be notified and copied on the Addendum.

For addenda to plan sheets, add the BSB Microstation “BrgFinal” library “ADDENDUM” cell to the lower right edge of the sheets that are affected by the change as shown below in the example.

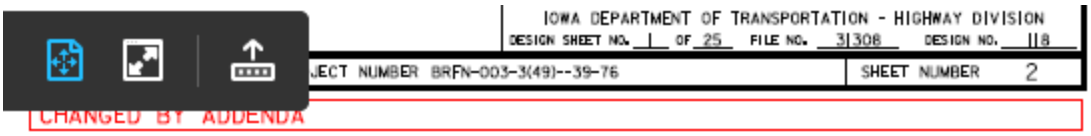

1.16 Plan revisions

Following the project letting, plan revisions can be issued. Plan revision sheets shall show deletions crossed-through and encircled by clouds. Changes and additions also shall be encircled by clouds, so that the revisions are easy to see. Plan revisions should be coordinated with the Resident Construction Engineer so the appropriate contract modification can be written if necessary.

Instructions for creating revision sheets in MicroStation are given on the V8 bridge documentation page on the BSB web site (https://iowadot.gov/consultants-contractors/bridges-structures/automation-tools/connect-applications).

1.17 Working drawing and calculation submittals

The Bureau reviews working drawing and calculation submittals to ensure that the structural adequacy of the design is maintained as detailed on the original design drawings. For typical projects IDOT SS 1105.03 lists the required working drawing submittals. Recommended submittals for calculations are listed in BDM Chapter 13 under CADD Note E65. CADD Note E65 also includes recommendations for when certification by an Iowa P.E. should be required. The review of working drawings submitted by a contractor covers only requirements for strength and arrangement of component parts and does not cover bills of material. The extent of the working drawing and calculation review will vary with each design. Review of calculations generally should be cursory in nature and only occasionally involve a more detailed look at a particular item of interest. For complex designs the reviewer shall discuss in advance the extent of the working drawing and calculation review with the supervising Unit Leader.

When reviewing working drawings, the reviewer shall do the following:

- Place a small red check mark next to all items verified to be correct on the drawing and make any additions or corrections to the drawing in red. Scanned copies of checked drawings shall be legible. To ensure legibility of the scanned copies, the reviewer shall not use highlighters to check working drawings.
- Every page of a working drawing submittal shall be stamped every time it is submitted. The only exception is for calculation submittals which will typically only require a stamp on the cover sheet.
- Each stamped page will indicate one of the three status options as shown in Figure 1.17: “No Exceptions Taken”, “Make Corrections (No Resubmittal Necessary)”, “Revise and Resubmit”.

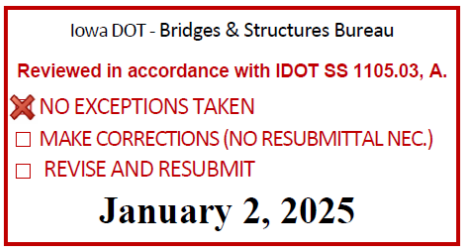

Figure 1.17. Working drawing review stamp

Working drawings for bridges with steel superstructures shall be reviewed according to the guidelines in the Steel Girders and Beams section of this manual [BDM 5.5.1.4.3]. Steel girder erection submittals are covered in more detail in BDM 5.5.1.4.4.

The Bureau also reviews shoring plans when such plans are required. In general, a shoring plan review follows the guidelines for working drawing review.

The DOT may reject a submittal if the file naming convention does not reasonably conform to the file naming standards in the contract plan documents. The letter from the DOT to the AGC in BDM C1.17 specifies the conditions for rejection more fully. A designer shall not reject a submittal based on file naming convention without approval from the Supervising Unit Leader.

1.18 Local systems review

Local Public Agency (LPA) structures shall be reviewed by the Bridges and Structures Bureau if the structures are either on the National Highway System (NHS) or federally funded using non-standard designs. LPA structures designated for review will need to go through either a cursory review or an in-depth review. If the structure is on the NHS, then an in-depth review will be required. All other structures will only require cursory reviews. In-depth reviews will generally be assigned to the Consultant Coordination Unit. In rare cases, the Final Design Units may be assigned in-depth reviews. In-depth reviews shall use the Bridge Checklist. Cursory reviews will be assigned to the Final Design Units and checked using the LPA Cursory Review Items for Bridge and Culvert Plans as listed in the commentary of this section.

The review engineer is responsible for completing the review in conformance with the Instructional Memorandum for LPA Bridge or Culvert Plans, I.M. 3.500. The review engineer shall return the cursory review comments or in-depth check plans to the LPA in an email in accordance with the memorandum. Every review email shall include only one of the following three status statements:

- Status: This project was not reviewed by the Iowa DOT Bridges and Structures Bureau since the project involves a standard bridge which is not located on the National Highway System.
- Status: The Iowa DOT Bridges and Structures Bureau review comments for this project do not require a response or resubmittal from the Owner.
- Status: The Iowa DOT Bridges and Structures Bureau review comments for this project require a response from the bridge designer on behalf of the Owner.

The last status statement shall only be included in the email if one or more review comments addressed an issue pertaining to safety, structural capacity, constructability or some other significant issue.

Links to NHS:
http://www.iowadot.gov/systems_planning/pdf/nhs_map.pdf
http://www.fhwa.dot.gov/planning/national_highway_system

Link to Bridge Plan Review Checklist, Culvert Plan Review Checklist, and CADD Review Checklist:
https://iowadot.gov/bridge/Design-Policies/Bridge-and-Culvert-Plan-Checklist

Link to Instructional Memorandum for LPA Check and Final Bridge or Culvert Plans, I.M. 3.500:
https://www.iowadot.gov/local_systems/publications/im/3500.pdf

1.19 OSHA fall protection

While many structures that present worker fall risks may not require permanent physical fall protection devices to comply with Occupational Health and Safety Administration (OSHA) requirements, the design of some structures may be required to include them. Fall protection can be provided by permanent fence or railing, continuous cable tie-offs, D-bolt tie-offs, concrete barriers, or similar devices. Decision-making regarding which type of protective device is used can be affected by project factors such as public access, constructability, ease of maintenance, and aesthetics. In many cases, installation of a permanent fall protection device is unnecessary, is not possible, or is problematic for other reasons such as traffic safety. In these cases, permanent physical fall protection may be replaced by a Fall Protection Plan for workers in accordance with OSHA guidelines.

1.19.1 Applicable OSHA citations

Non-Construction Drop Elevation (4 feet max.) - Occupational Safety and Health Standards Part 1910.28(b)(1); https://www.osha.gov/laws-regs/regulations/standardnumber/1910/1910.28; also see

general summary here: https://www.osha.gov/fall-protection (lists 4 feet max. for "general industry", 6 feet max. for "construction industry").

Fall Protection Railing (42-in. min. height + mid-height rail min.) - Occupational Safety and Health Standards Part 1910.29(b); https://www.osha.gov/laws-regs/regulations/standardnumber/1910/1910.29 and Safety and Health Regulations for Construction Part 1926.502(b); https://www.osha.gov/laws-regs/regulations/standardnumber/1926/1926.502.

1.19.2 Structures requiring OSHA fall protection

All structures that include features representing worker fall hazards with a drop of more than 4 feet require some form of fall protection for workers engaged in maintenance and other activities adjacent to the drop. Fall protection may either be provided by a permanent physical device or by a Fall Protection Plan employed by workers near the fall hazard. Example structures include bridges, retaining walls, culvert headwalls, and drop inlets. If the structure includes pedestrian or bicyclist fall protection, no additional measures are typically required if the only drop is from the pedestrian facility supported on or by the structure. If Access Control fencing is installed on the structure or immediately adjacent so that the drop is protected, no additional measures are typically required.

If the structure with a drop is accessible to the public, it is typically desirable to include permanent fall protection in the form of an AASHTO-compliant railing or fence. This is because AASHTO-compliant railings have more stringent pass-through requirements than OSHA railings. Chain link fence with 42-inch minimum height provides both OSHA and AASHTO fall protection for pedestrians only. If a trail or other multi-use path is adjacent, use 48-inch minimum height fence. In some cases, if pedestrian access is highly unlikely or incidental in nature, an OSHA-compliant railing is sufficient.

1.19.3 Types of physical OSHA fall protection devices

The following permanent physical fall protection devices can currently be considered compliant with OSHA:

- Chain link fence at least 42 inches in height (also AASHTO-compliant, but for pedestrians only)
- Any AASHTO-compliant railing or fence at least 42 inches in height
- Metal tube or pipe railing at least 42 inches in height with at least one centered mid-height horizontal tube or pipe
- Cable railing at least 42 inches in height with at least one centered mid-height cable
- Concrete traffic barrier or a combination steel-on-concrete traffic barrier at least 42 inches in height*
- Continuous cable securely mounted to a structure above and adjacent to a drop, to which a worker could tie off a body harness and fall-arrest system
- D-bolts securely mounted to a structure at 6-foot maximum horizontal spacing above and adjacent to a drop, to which a worker could tie off a body harness and fall-arrest system
- A structural metal grate suitable for pedestrian loads, such as for covering a drop inlet

*Note that it is not advisable to add non-crash tested metal railings to crash tested barriers as a means of meeting OSHA requirements.

See the Commentary section for detailed project examples of each type of OSHA fall protection listed above.

1.19.4 Retaining wall fall protection

Retaining walls that are accessible to the public should include Access Control fence along the entire length of the wall.

Retaining walls that are inaccessible to the public and include a drop of more than 4 feet require OSHA fall protection in the form of a physical device or usage of a Fall Protection Plan. If chain link fence is used as fall protection, it is often preferable to use chain link fabric that stops 6 inches short of the local grade

so the fence is less likely to collect wind-blown trash. A 42-inch fence with 36-inch fabric and a tension wire at the bottom of the fabric is the usual solution. In some cases, it may be desirable to combine the OSHA fall protection with Access Control and use a tall fence on or immediately adjacent to the top of the wall. If the top of wall includes a concrete drainage trough, it is preferable to place the fall protection on the top of the wall so that trough-related maintenance activities are fall-protected.

If there is no pedestrian path immediately adjacent to a wall-mounted fence, specify a tension wire at the bottom of the fence fabric instead of a bottom pipe rail. If a pedestrian facility is present, use a bottom pipe rail. Fences 5 feet tall and shorter also do not require end panel mid-height brace rails, only diagonal turnbuckle tensioners to create stability.

When walls are tiered, the drop from the lower wall may be protected by a continuous cable tie-off attached to the face of the upper wall. The drop from the upper wall may be protected by an OSHA-compliant device or a Fall Protection Plan if inaccessible to the public, or by Access Control fence if accessible to the public.

1.19.5 MSE wall-supported fall protection

When bridge abutments are wrapped with MSE retaining walls on the sides and front face, a vertical step condition typically occurs at the abutment wing. If the top of wall alongside the abutment wing and diaphragm allows space for a worker to stand, OSHA fall protection or usage of a Fall Protection Plan is required. For aesthetic reasons and due to the short-term incidental nature of maintenance work in this area, it is preferable to use D-bolts embedded in the abutment concrete for this condition rather than railing or fence on top of the wall coping. D-bolts spaced at maximum intervals of 6 feet will allow a worker to securely tie off a body harness and fall arrest system.

For MSE-supported bridge abutment foreslopes where the wall extends past the abutment and down the slope to the toe of berm, OSHA fall protection is required. When this area is inaccessible to the public, an OSHA-compliant device or Fall Protection Plan may be employed. If fence or railing is used, the device may be terminated when the drop measures less than 4 feet. When this condition is accessible to the public, especially in urban areas or when there is a pedestrian path at the toe of the berm slope, a chain link fence or other AASHTO-compliant device should be used. The entire length of wall along the slope should be protected.

1.19.6 RCB headwall fall protection

RCB culvert headwalls in rural roadway ditches do not typically include OSHA railings, since these structures are well-marked for field maintenance activity and appropriate measures are taken to avoid falls when work occurs near these structures. RCB culvert headwalls in heavily populated areas or near pedestrian or bicycle paths should receive an AASHTO-compliant railing or fence, as should headwalls of all pedestrian tunnel RCBs.

RCB headwall-mounted chain link fence does not require a bottom pipe rail unless the parapet is immediately adjacent to a pedestrian path. Use tension wire at the bottom of the chain link fabric if no path is present.

For culvert headwalls in urban areas, the immediate context should be considered before determining the appropriate fall protection device. For example, a RCB culvert headwall embedded in a residential area should receive an AASHTO-compliant railing or fence rather than an OSHA-compliant device or Fall Protection Plan. In addition, drops of less than 4 feet should be considered for fall protection when pedestrians, especially children, might use the immediate area surrounding the structure. The likelihood of public activity and the presence of schools, parks, or other recreational areas nearby should be taken into consideration when selecting a fall protection device and the extent of coverage. When Access Control fencing excludes pedestrian access to the RCB culvert headwall, the headwall should be made OSHA compliant either through a fall protection railing or confirming that a Fall Protection Plan will be employed.

1.19.7 Drop inlet fall protection

Drop inlets should typically receive an OSHA railing so that the fall is protected, and so that debris capture and impacts to water flow into the inlet are minimized. OSHA railing on some drop inlets may present a traffic hazard, especially within the clear zone of the roadway, and may be omitted in some cases. In urban areas, either an OSHA railing or a hinged, lockable cover grate may be used, depending on the proximity to pedestrian facilities and the likelihood of pedestrian presence near the structure. Whenever children may be present, it is preferable to use a cover grate. When Access Control fencing excludes pedestrian access to the drop inlet, the drop inlet should be made OSHA compliant either through a fall protection railing or by confirming that a Fall Protection Plan will be employed.

C1 General Design

C1.11.4 Project documentation

The following outlines in more detail the electronic storage location for project documentation.

ProjectWise folder structure:

- ProjectWise Explorer Datasources\PWMain\Documents\Highway\Bridge\Assets
- Under the Assets subfolder are the Bridge-mounted Sign Support Structures, Bridges and Culverts, Highmast Lighting Towers, Mast Arm Structures, Overhead Sign Support Structures and Tunnels subfolders. The electronic file envelope information will be stored under the Asset ID subfolder by the Phase Number as shown below. Future projects will be stored under the same Asset ID subfolder with a new Phase Number.

ERMS will copy out of ProjectWise the contents of the File Envelope Correspondence subfolder under these three categories: Preliminary Design, Final Design and Post Letting.

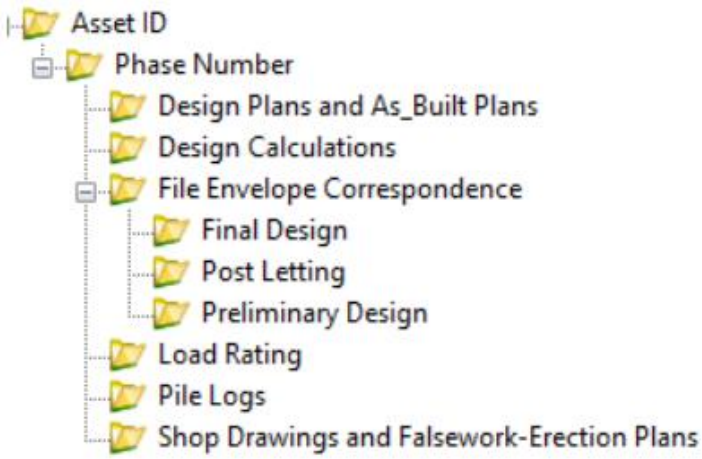

The Preliminary Design Unit shall place project correspondence and concepts in the ProjectWise Preliminary Design subfolder.

The Final Design Units and Consultant Coordination Unit shall place email correspondence, project plans for letting (including addenda, special provisions, and standards), shop drawings, plan revisions, design calculations, and documentation related to the design decisions into the ProjectWise Final Design subfolder. Staking e-files and other construction e-files are not required in the Asset ID subfolder.

- Project plans with multiple design numbers for different Assets IDs shall have plan sheets split apart to file for the corresponding assets. Geotechnical (soils design) sheets must be included if part of the letting plan set.
- Roadway sheets, roadside sheets, and cross sections shall be included with the project plans if total plan sheets are less than 100 sheets. If total plan sheets are over 100 sheets, include only the main road and roadside sheets and exclude the cross-section sheets (X, W, etc.)

- For design calculations, the files shall be organized and labeled appropriately to reflect the component designed and software application used (e.g. LRFD Footing Design_Pier 3_Column 1.xlsb). PDF output files should be included for structural design results from commercial software when designing for strength or service limit states (e.g. RC-Pier output files). Excel and Mathcad files are acceptable files to be stored.
- Plan revisions are documents that occur post letting but shall be included in the Final Design subfolder.

The ProjectWise Post Letting subfolder will hold correspondence received after the letting associated with design inquiries and construction issues. Final Design Units and the Consultant Coordination Unit place all documentation in the Post Letting subfolder in addition to the Final Design subfolder.

Requesting an Asset ID subfolder in ProjectWise

For new or replacement structures or revetment projects, the Preliminary Design Unit Leader or designated designer shall submit a request to the Automation Engineer for the Asset ID subfolder be created in ProjectWise if it does not exist.

For repair and rehabilitation projects, the assigned Final Design Unit Leader or Consultant Coordination Unit reviewer shall submit a request to the Automation Engineer for the Asset ID subfolder be created in ProjectWise if it does not exist.

Printing from Outlook into Windows File Explorer (recommended)

The items saved in the electronic subfolders are the same items that in the past would have been printed and saved in a yellow manila paper file envelope. Create a folder structure to print digital copies of correspondence. A sample folder structure is shown below but you can use any structure that works for you. For a project, a copy of the file envelope documents will need to be saved for each asset.

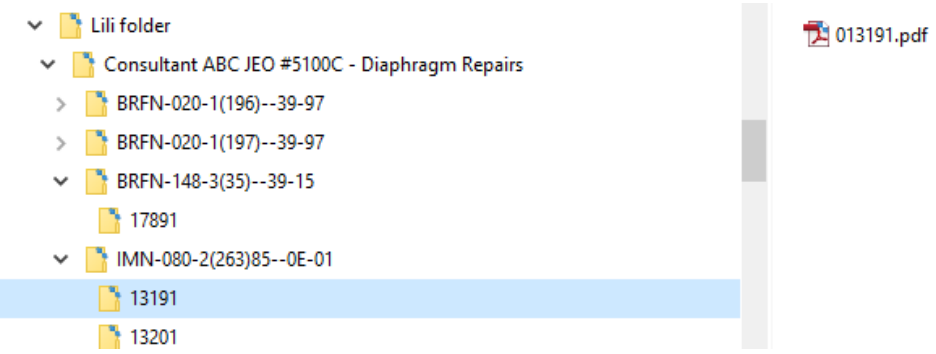

There are several ways to print PDF digital copies of Outlook emails. One method is shown in the following figure. After creating a subfolder to store the PDF files, open the first email to be saved and digitally print to a PDF as shown in the first image. You will be asked to save the file after clicking the ”Print” button. Use a file name that will identify the project and asset. Consider using the Asset ID in the file name.

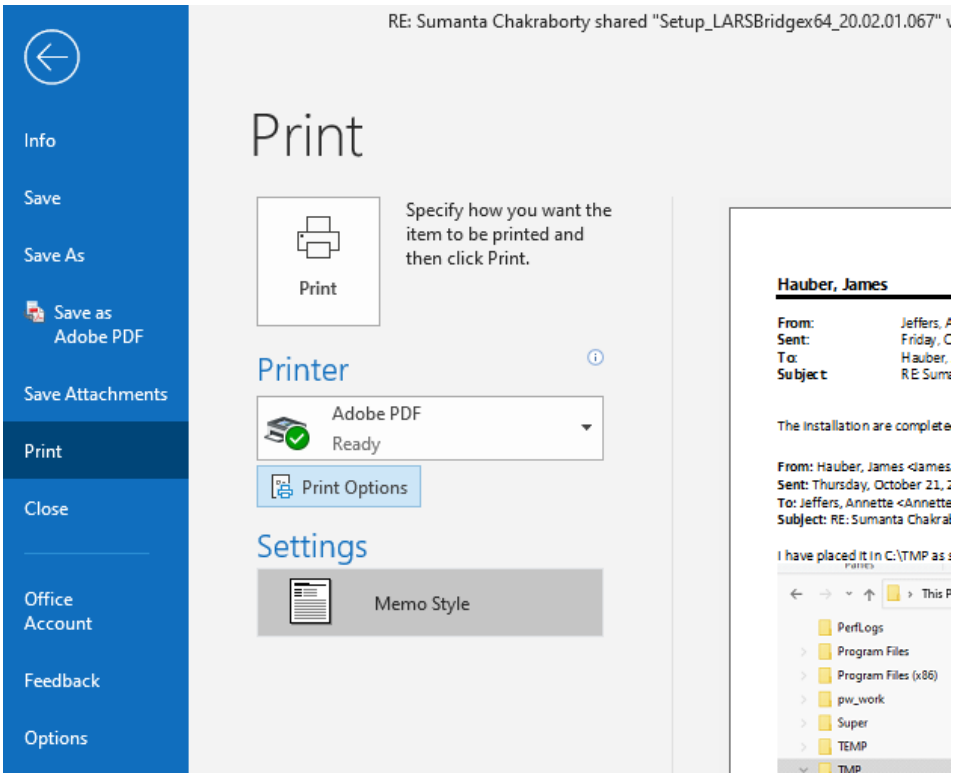

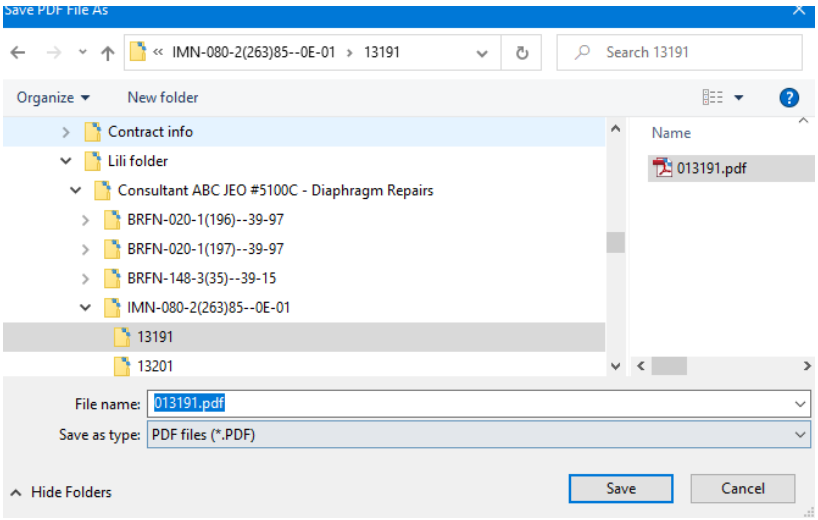

After you digitally print the first PDF file, you can use a feature to append additional correspondence. Right click on a displayed email message and a drop-down menu will give you the option to “Append to Adobe PDF”. Once you select “Append to Adobe PDF”, you will navigate to the original PDF to add the new correspondence. After you click the ”Open” button, the email will be converted into a PDF and become attached to the end of the existing PDF digital print.

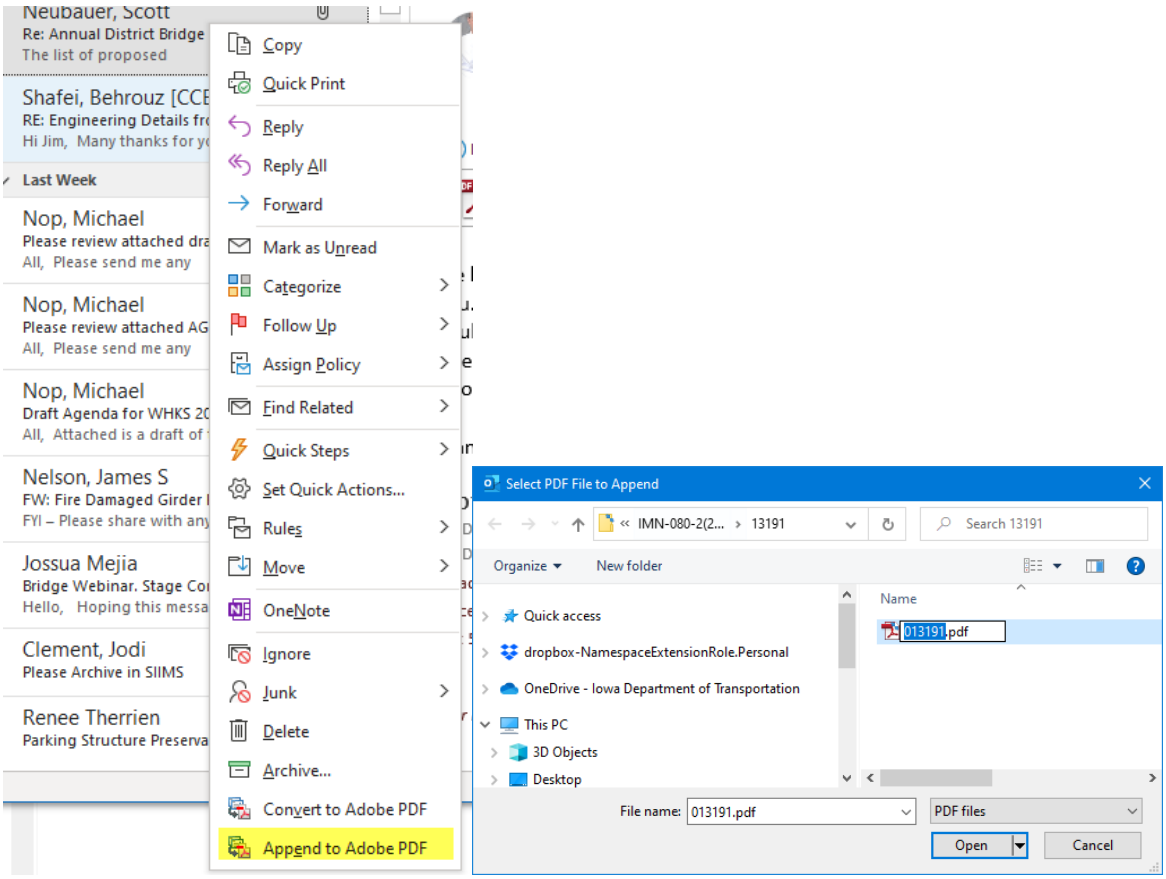

For emails with attachments, save the attachment files in File Explorer. Combine the files by selecting the ones in File Explorer that you want to combine, right click, and then select "Combine files in Acrobat". Click on the blue "Combine" button and the files will open as a combined PDF file with a generic name (e.g. "Binder-1").

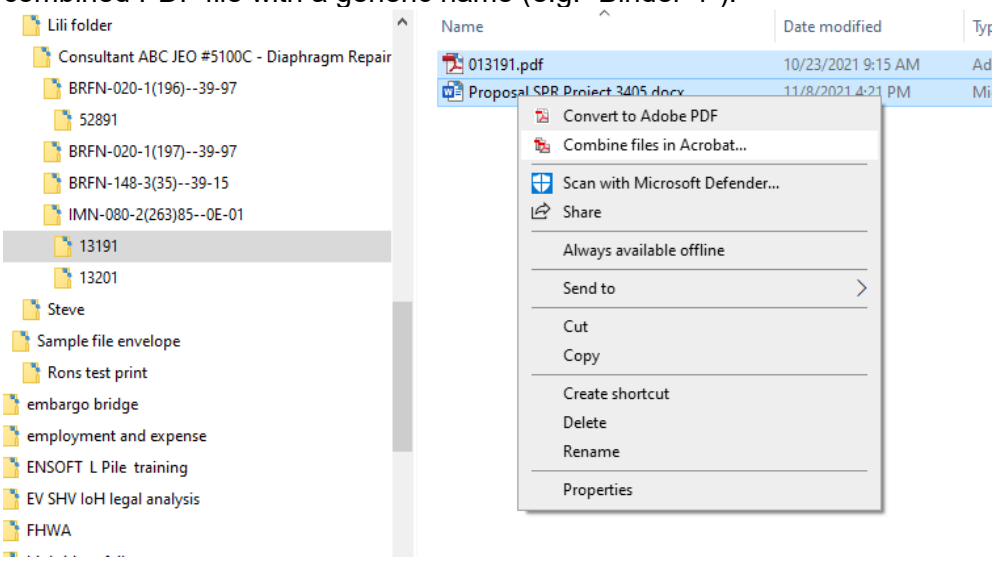

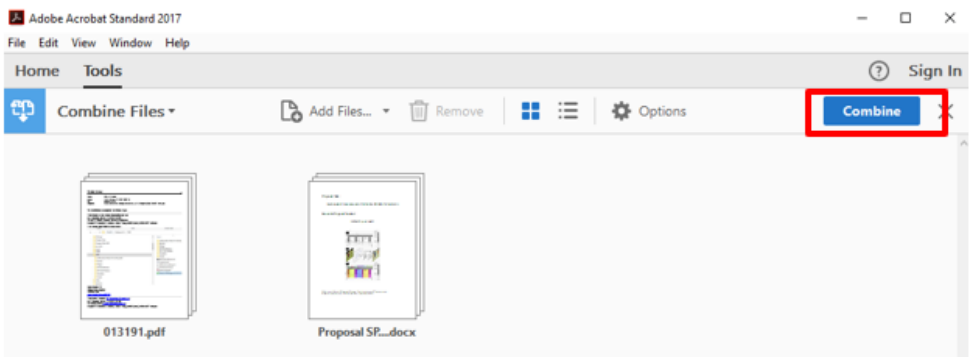

After the PDF opens and you have verified that the original files have been combined, save the combined PDF file with an appropriate name (e.g. the name of one of the original attachment files).

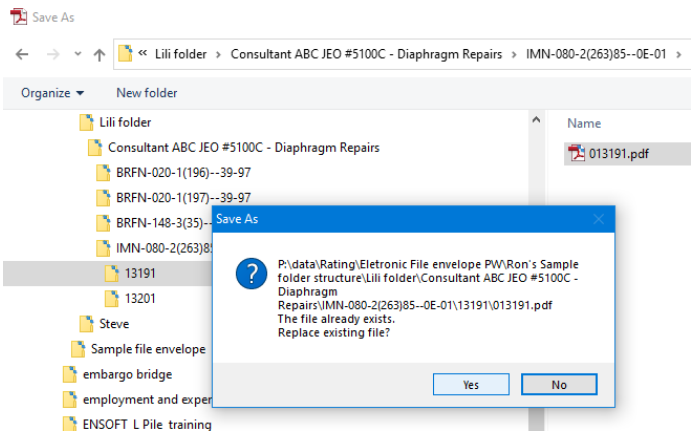

After saving the combined PDF containing the converted attachment files and appending the combined PDF to the PDF digital print of email correspondence, you can delete the attachments from File Explorer.

C1.11.5 Quality assurance

The following information shall be included with the calculation title page document to be stored in the appropriate ProjectWise subfolder:

Quality Control/Quality Assurance Record

Project Description:

Project Number:

Design Number:

File Number:

Design Team

Transportation Engineer Manager (TEM):

Designer:

Technician:

Checker:

Engineer of Record (EOR): [EOR shall include electronic signature and PE number.]

Hydraulic Design Engineer:

Design Parameters

Alignment: Straight ____ Curved _____

Superstructure: CCS (std) ____ CCS (dsn) ____ PPCB (std) ____ PPCB (dsn) ____

RSS (std) ____ RSS (dsn) ____ CWPG _____

RCB (std) ____ RCB (dsn) ____ MISC (std) _____ MISC (dsn) ____

Substructure: Integral Abutment ____ Stub Abutment ____

Pile Bent Pier ____ Frame Pier ___ T-Pier ____ Wall Pier ____

C1.17 Working drawing and calculation submittals

The following letter was sent to the AGC regarding file naming conventions for working drawing and working calculation submittals.

IOWA | DOT

KIM REYNOLDS, GOVERNOR
ADAM GREGG, LT. GOVERNOR

SCOTT MARLER, IOWA DOT DIRECTOR
TROY JERMAN, IOWA DOT COO

IOWA DEPARTMENT OF TRANSPORTATION
DIVISION/BUREAU
800 Lincoln Way
Ames, IA 50010
515-239-1233
www.iowadot.gov

August 26, 2024

AGC of Iowa
Mitch Dillavou
701 East Court Avenue, Suite B
Des Moines, IA 50309

Dear Mr. Dillavou:

As a follow up to discussion at a joint DOT/AGC meeting on March 24, 2024, the DOT is communicating its intention to reserve the right to reject working drawing (WD) and working calculation (WC) submittals that do not reasonably follow the file naming conventions given in the contract documents. Distributing WD and WC submittals from DocExpress to the appropriate personnel in a timely manner is partially dependent on the ease of with which the submittals can be identified. While many submittals are properly named there have been exceptions. To increase consistency to the benefit of the DOT and AGC, the DOT may elect to reject any submittals starting in 2025 that do not reasonably conform to the file naming standards in the Contract documents. To help avoid submittal delays, any rejections based on file naming conventions will be issued within 8 days starting from the date the complete submittal is received from the Contractor.

Respectfully,
Michael Nop
Bridge Project Development Engineer

C1.18 Local systems review

LPA CURSORY REVIEW ITEMS FOR BRIDGE OR CULVERT PLANS

The following bulleted items are some of the general issues/concerns to address for cursory structural reviews. Since each structure is different, not all of these items pertain to each cursory review. Furthermore, the extent of the review shall not be limited to the items below. The review engineer shall make a sound judgment on what the critical issues are for the structure.

- Verify the design code and specifications are correct.
- Verify that the plan has typical bridge or culvert design makeup: bridge, geotechnical, and road sheets. Notify the engineer of record if any items might be missing.
- Verify that all disciplines have a PE seal in the plans.
- Briefly verify that the type of structure is appropriate for the location based on the Situation Plan sheet. For bridges and culverts, the structure should meet the general policies established in the BDM. [BDM 7.1.1(culverts) and BDM 3.6, 3.7, 5.1.1, 6.1.1, 6.5.1.1, 6.6.1.1 (bridges)]
- For bridges, verify horizontal and vertical clearances are acceptable or piers are adequately protected. [BDM 3.2.2.4 (waterway), BDM 3.3.1, 3.7.4 (highway), and BDM 3.4.1.1 to 3.4.1.4 and 3.4.2.1 to 3.2.4.2.4 (railroad)]
- For bridges over waterways, briefly review the hydraulic information for conformance to the BSB preliminary design policies. Some example items to review are given below:
    1. Pier type is adequately chosen for the drainage area listed or for the potential of debris flowing in the channel. [BDM 3.7.4]

    2. Stream velocities and scour depths may indicate a need for stream bank protection. [BDM 3.2.2.6]
    3. “Design” and “Check” scour elevations and high water elevation for stage flows should be listed.
- For bridges over railroads, briefly review the proper safety and protection accommodations are in the plan set. (BNSF and UP railroads have additional requirements).
    1. Vertical and horizontal clearance given on the Situation Plan sheet.
    2. Piers within 25' of centerline track shall meet heavy construction as defined in AREMA. [BDM 3.4.1.3, 3.4.2.3, 6.6.2.6]
    3. Bridge berms preferably have macadam stone slope protection.
    4. Proper 44" TL-5 barrier rails or fencing is used based on type of traffic on bridge (vehicular, bicycle, or pedestrian) [BDM 3.4.1.6, 3.4.2.6, 5.8.1.2]
- If standard bridge or culvert sheets appear applicable, encourage the designer to use them:
    1. Bridge wing armoring
    2. Subdrains
    3. Slope protection
    4. Abutment backfill procedures
    5. Other standard sheets (as appropriate)
- For bridges, briefly review the soil borings to obtain an idea of the foundation bearing conditions. For pile foundations, generally assess the Structural Resistance Level (SRL-1, SRL-2, etc.) of the pile foundation and the adequacy for the soil conditions.
- Look for future maintenance headaches (e.g. type of bearings or lack of bridge deck drainage).
- Look for structural adequacy problems. Member sizes should visually be reasonable and all necessary structural components should be included (e.g. intermediate diaphragms).
- Look for constructability problems (e.g. steel reinforcing congestion in concrete).
- Encourage serviceability improvements to the structure (e.g. deck drains).

C1.19 OSHA fall protection

The following example projects included different types of OSHA-compliant fall protection devices. Note that projects not listed here may be covered by a Fall Protection Plan or targeted training for fall avoidance in lieu of physical devices.

Top of retaining wall railing or fence:

- NHSX-030-7(143)—3H-57, C Street wall, Linn Co. Design No. 109 (metal pipe railing)
- IM-NHS-029-7(45)149—03-97, I-29 at Hwy 77 interchange, Woodbury Co. (chain link fence)
- BRF-052-1(82)—38-49, US 52 near Bellevue SP entrance, Jackson Co. (metal pipe railing)
- IM-080-6(488)242—13-52, 1st Ave DDI over I-80, Johnson Co. (chain link fence)
- STP-009-9(82)—2C-03, IA 9 at Lansing bridge (MSE wall), Allamakee Co. (metal tube railing)
- NHSX-523-1(84/91)—3H-65, Mills Co. Design Nos. 1111/1211 (cable railing)
- IM-380-6(358)25—13-57, Boyson Rd over I-380, Linn Co. Design No. 1425 (AC fence on grade)

Top of retaining wall AASHTO railing or fence (including Access Control):

- NHSX-052-2(83)—3H-31, Dubuque Co. Design No. 311 (AC fence)
- BRFN-065-6(42)—39-42, US 65 over Iowa River, Hardin Co. Design No. 110 (AASHTO metal picket railing)
- BRFN-098-1(7)—38-89, IA 98 over Des Moines River, Van Buren Co. Design No. 114 (AC fence)
- NHSX-151-3(158)—3H-57, US 151 in Fairfax, Linn Co. Design No. 918 (42” chain link fence)
- IM-380-6(449)14—13-57, Wright Bros. Blvd & I-380 interchange, Linn Co. (48” chain link fence on wall top with parallel trail)
- IM-235-2(599)0—13-77, I-235 at MLK Jr Pkwy (AC fence)
- US 71 over Okoboji Lakes Causeway (project no. unknown), Dickinson Co. (AASHTO railing)

MSE wall step abutment-mounted D-bolts:

- FHWA #700200, IM-NHS-029-7(37)49—03-97, Wesley Pkwy over I-29, Woodbury Co. Design No. 1711
- FHWA #700040, IM-NHS-074-1(206)5—03-82, I-74 at US 67 Ramp A, Scott Co. Design No. 1719
- FHWA #700141 and #32081, IM-080-6(489)243—13-52, 1st Ave over I-80 DDI, Johnson Co. Design Nos. 524, 624

Top of retaining wall continuous tie-off cable:

- IM-235-2(599)0—13-77, I-235 tiered CIP walls between E. 9th St and E. 12th St, Polk Co. (inspection tie-off cable)

MSE wall step chain link fence:

- IM-235-2(599)0—13-77, at 50th St and 31st St bridges over I-235, Polk Co.

MSE wall coping-mounted chain link fence along bridge foreslope:

- I-235 over 28th St (fencing project no. unknown), Polk Co.
- IM-029-7(47)49—13-97, I-29 over Virginia St, Woodbury Co.
- NHSX-100-1(77)—3H-57, IA 100 over Ushers Ferry Rd, Linn Co. Design No. 1414

Top of RCB culvert headwall railing or fence:

- STP-122-1(8)—2C-17, Bus 18 over Chelsea Creek, Cerro Gordo Co. (metal picket railing)
- STPN-136-1(118)—2J-23, IA 136 near N. 10th St, Clinton Co. Design No. 1225 (chain link fence)
- (see also RCB trail tunnel headwall examples below)

Top of RCB trail tunnel headwall railing/fence:

- IMN-029-7(43)149—0E-97, Woodbury Co. Design No. 813 (AASHTO metal picket railing)
- BRFN-065-5(30)—39-85, Story Co. Design No. 413 (AASHTO metal pipe railing)
- NHSX-100-1(42)—3H-57, Linn Co. Design No. 614 (chain link fence)
- BRF-34-1(96)—38-65, Mills Co. Design No. 118 (chain link fence)
- IM-NHS-080-7(155)255—03-16, Cedar Co. Design No. 121 (AASHTO metal picket railing)
- IM-NHS-035-4(268)104—03-85, Story Co. Design No. 423 (chain link fence)
- IM-080-3(268)124—13-77, Polk Co. Design No. 1125 (chain link fence, ground-mounted except along parapet)

Drop inlet railing or grate:

- NHSN-019-1(52)—2R-56, Lee Co. Design No. 120 (metal pipe railing; rural conditions)
- US 71 near Okoboji, Dickinson Co. (metal cover grate, urban conditions; project no. unknown)

Traffic barriers previously used in Iowa with OSHA-compliant 42-inch minimum height:

- 44-inch F-Shape
- 44-inch Single Slope*
- Michigan BR27C
- Modified B-25 Series*
- PennDOT PA*
- 42-inch Vertical Parapet
- Retrofit Rail w/Back-Mounted Fence*
- Safety Shape w/Back-Mounted Fence*
- Texas T80HT
- Texas C412 (formerly F411)*
- Texas C411 (not yet used in IA, but conditionally approved for use)*
- MnDOT Concrete Rail w/Back-Mounted Bicycle Railing (Local Systems only)

(* = approved for current and future use by Iowa DOT MASH Implementation Committee)

TABLE OF CONTENTS ~ SUSTAINABLE BRIDGE DESIGN

2 Sustainability
2.1 Overview
2.1.1 Definition
2.1.2 Sustainability goals
2.1.3 Sustainability assessment tools
2.1.4 Water use and quality
2.1.5 Materials and resources
2.1.6 Potential benefits
2.2 Context sensitive design
2.2.1 Core principles of context sensitive solutions
2.3 Visualization
2.3.1 Uses and benefits of visualization
2.3.2 Visualization case studies
2.4 Bridge preservation
2.4.1 Introduction

2 Sustainability

2.1 Overview

The Bridges and Structures Bureau (BSB) follows established Iowa Department of Transportation (Iowa DOT) guidelines, in providing, promoting and using sustainable practices. The Iowa DOT has always been at the forefront of sustainable design and maintenance practices.

The use of these materials is intended as a policy guide for projects developed for the Iowa Department of Transportation, Bridges and Structures Bureau.

2.1.1 Definition

The United Nations World Commission on Environment and Development (WCED) in its 1987 report Our Common Future defined sustainable development as: ***"Development that meets the needs of the present without compromising the ability of future generations to meet their own needs."***

The Federal Highway Administration (FHWA), which is actively promoting sustainability through their **Invest** – ***Sustainable Highways Initiative*** *(www.sustainablehighways.org)*, has the following mission statement:

> ***"The Sustainable Highways Initiative supports programs and activities conducted across the Federal Highway Administration to facilitate balanced decision making among environmental, economic, and social values — the triple bottom line of sustainability."***

Essentially, ***sustainability means balancing economic, environmental and community well-being in a manner that protects the needs of current and future generations.*** A sustainable transportation system provides people with vibrant transportation choices, while addressing environmental and community needs.

Sustainability is a concept that takes into account the long view of projects, considering costs and benefits over lifetimes rather than concentrating on a one or two year cost life cycle. Incorporating sustainability into decision-making can have positive effects for stakeholder relations, for the bottom line, and for the natural resources of the state.

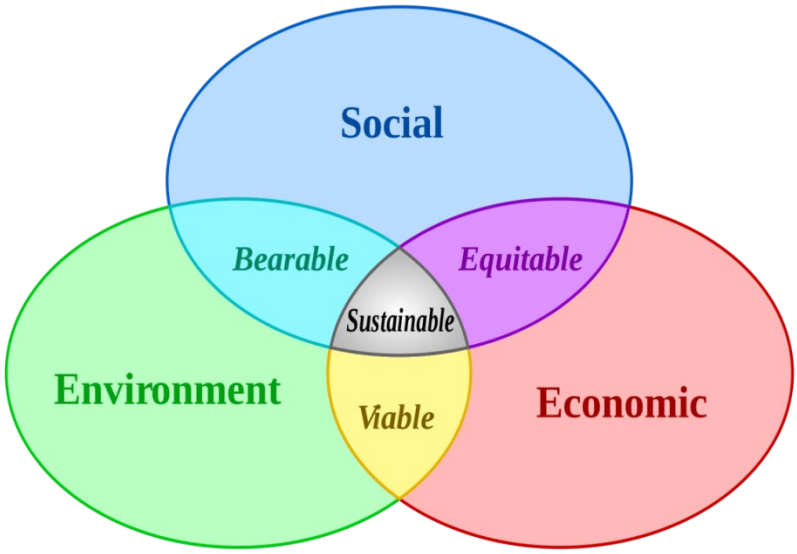

Figure 2.1.1 Sustainable values

Sustainable bridge design is concerned with questions, such as:

- Does the site employ available best practices in sedimentation and erosion control?
- Does the bridge connect two well-established existing developments, or is it a bridge to "nowhere"?
- Does the proposed structure add to the economic and social value of the two bodies it connects?
- Does the bridge disturb a greenfield, wetland or farmland?
- Will the bridge be constructed in such a fashion as to minimize delays to the general public?
- Does the bridge replace or improve an existing structure or is it a new structure?
- Are footings and piers required, and how does their placement impact the surrounding environment?
- Can a bridge in one location replace several smaller, possibly less functional bridges in disparate locations?

Additional State DOT Resources:

- Washington State Department of Transportation – Sustainable Transportation
- Minnesota Department of Transportation – Sustainability
- Oregon Department of transportation – Sustainability program
- Ohio Department of Transportation – Sustainable Initiatives
- New York State Department of Transportation - GreenLITES
- Colorado Department of Transportation – Sustainability
- Virginia Department of Transportation – Sustainable Building Practices
- North Carolina Department of transportation – Statewide Transportation Plan
- Iowa Department of Transportation - Sustainability & Resiliency

2.1.2 Sustainability goals

The goals of providing sustainable features in the design and construction of bridge projects are to:

- Minimize impacts to environmental resources
- Minimize consumption of material resources
- Minimize energy consumption
- Preserve or enhance the historic, scenic and aesthetic context of a bridge project
- Integrate bridge projects into the community in a way that helps to preserve and enhance community life
- Encourage community involvement in the transportation planning process
- Encourage integration of non-motorized means of transportation into a highway project

Sustainable bridge design should strive to find a balance between what is important:

- to the transportation function of the facility
- to the community
- to the natural environment, and is economically sound

While encouraging the use of new and innovative approaches in achieving these goals.

2.1.3 Sustainability assessment tools

Sustainable infrastructure is one of the keys to maintaining a thriving economic base in communities throughout the state.

Sustainable bridge design is concerned with new bridges but it is also about rehabilitation, reuse or the optimization of existing bridges.

This includes an economic analysis, the protection of existing bridges from environmental degradation, use of sustainable materials, minimizing waste and developing new strategies to improve the bridge design/construction process.

The main sustainability assessment tools for bridges are:

- **Economic** – cost/benefit analysis, modelling, regressions, scenarios
- **Environmental** – life-cycle analysis, material flows, resource accounting
- **Social** – sustainable livelihoods, human and social capital measurement, participatory processes

<u>Infrastructure Rating Systems</u>

Currently a number of programs, similar to the Leadership in Energy and Environmental Design (LEED) rating system for building have been developed for infrastructure.

The Federal Highway Administration, has developed the INVEST rating system.

> *"INVEST includes a collection of sustainability best practices, called criteria, intended to help transportation practitioners evaluate programs and projects in the area of sustainability. The goals of INVEST include identifying these criteria, assisting agencies in researching and applying the criteria, and establishing an evaluation method to measure the progress toward more sustainable highway projects."* (https://www.sustainablehighways.org)

The Illinois Department of Transportation has developed the I-LAST - Livable and Sustainable Transportation Rating System and Guide (https://idot.illinois.gov/content/dam/soi/en/web/idot/documents/transportation-system/reports/desenv/i-last-v-2-02.pdf)

From I-LAST:

The purpose of this guide is threefold:

- *Provide a list of practices that have the potential to bring sustainable results to highway projects.*
- *Develop a simple and efficient method of evaluating transportation projects with respect to livability, sustainability, and effect on the natural environment.*
- *Record and recognize the use of sustainable practices in the transportation industry.*

The American Society of Civil Engineers (ASCE) has developed a new rating system, similar to LEED, for infrastructure, Called ENVISION. (http://www.sustainableinfrastructure.org)

*"**Envision**™ provides a holistic framework for evaluating and rating the community, environmental, and economic benefits of all types and sizes of infrastructure projects. It evaluates, grades, and gives recognition to infrastructure projects that use transformational, collaborative approaches to assess the sustainability indicators over the course of the project's life cycle."*

2.1.4 Water use and quality

The quality and quantity of water used in construction and that which runs off the structure after its installation should be considered:

- For water crossings, how does the proposed hydraulic opening impact the flood performance upstream and downstream?
- Was non-potable water used during the construction process? How much?
- What systems are in place to ensure that runoff from the bridge is minimized (grass swales along the curb, etc.)?
- What systems are in place to ensure runoff from the structure is of high quality?
- Where is the runoff from the bridge discharged?

(Sustainable Structures for the Bridge Engineer – Daniel Whittemore, P.E., LEED AP)

2.1.5 Materials and resources

Thinking about materials and resources ensures that the choice in bridge materials is appropriate for the site and the future maintenance and recycling of the structure.

Sustainable Material and Resource questions include:

- Are recycled materials used in the structure?
- Can the materials used in the structure be recycled?
- If rehabilitated, are the materials from the old structure reused in the new?
- If rehabilitated, how much of the original structure is utilized in the new design (abutment stems, piers, etc)?
- Are materials regionally available or brought in from long distances?
- Are new materials or processes utilized that reduce the overall quantity demands for the structure?
- Are otherwise landfilled materials used in the bridge construction (i.e. - fly ash or slag in concrete mixes)?
- Is the bridge designed with a complete Life Cycle Analysis in place?

(Sustainable Structures for the Bridge Engineer – Daniel Whittemore, P.E., LEED AP)

2.1.6 Potential benefits

After sustainable bridges have been suitably defined and quantified, the inevitable question then becomes: what are the tangible benefits for investing the extra layer of effort and resources into such a project?

Hard evidence for the benefits of this type of bridge design is an area that requires more real world examples, and both academic and field studies as have been done previously for buildings. However, from the above metrics, a list of proposed benefits for this type of design could include the following:

- Bridges that utilize fewer raw materials on the jobsite
- Bridges that utilize less time and energy to construct
- Bridges that funnel materials away from overcrowded landfills.
- Bridges that help deal with the coming needs of 21st century travel of faster and more efficient transportation
- Bridges that encourage alternate modes of transportation
- Further funneling of federal research dollars into leading edge bridge design and materials
- Bridges that produce fewer upstream and downstream negative impacts to both the natural and developed communities
- Bridges that due to their certification could streamline the permitting process
- Bridges that are able to monitor their own health and alert owners to critical conditions
- Bridges that better enhance the social and economic communities and tie established neighborhoods together
- Bridges that are better planned and thought out with engineering judgment that can ultimately better serve the public

(Sustainable Structures for the Bridge Engineer – Daniel Whittemore, P.E., LEED AP)

2.2 Context sensitive design

The context sensitive solutions (CSS) approach is to combine the work of interdisciplinary teams with public and agency stakeholders to tailor solutions to the setting; preserve scenic, aesthetic, historic, and environmental resources; and maintain safety and mobility.

(https://www.fhwa.dot.gov/planning/css/index.cfm)

The goal of FHWA's CSS program is to deliver a program of transportation projects that is responsive to the unique character of the communities it serves.

In short, CSS supports livable communities and sustainable transportation.

2.2.1 Core principles of context sensitive solutions

These core CSS principles apply to transportation processes, outcomes, and decision-making.

1. Strive towards a shared stakeholder vision to provide a basis for decisions.
2. Demonstrate a comprehensive understanding of contexts.
3. Foster continuing communication and collaboration to achieve consensus.
4. Exercise flexibility and creativity to shape effective transportation solutions, while preserving and enhancing community and natural environments.

- Results of Joint AASHTO/FHWA Context Sensitive Solutions Strategic Planning Process Summary Report, March 2007

Context sensitive solutions is guided by a process which:

- Establishes an interdisciplinary team early, including a full range of stakeholders, with skills based on the needs of the transportation activity.
- Seeks to understand the landscape, the community, valued resources, and the role of all appropriate modes of transportation in each unique context before developing engineering solutions.
- Communicates early and continuously with all stakeholders in an open, honest, and respectful manner, and tailors public involvement to the context and phase.
- Utilizes a clearly defined decision-making process.
- Tracks and honors commitments through the life cycle of projects.
- Involves a full range of stakeholders (including transportation officials) in all phases of a transportation program.
- Clearly defines the purpose and seeks consensus on the shared stakeholder vision and scope of projects and activities, while incorporating transportation, community, and environmental elements.
- Secures commitments to the process from local leaders.
- Tailors the transportation development process to the circumstances and uses a process that examines multiple alternatives, including all appropriate modes of transportation, and results in consensus.
- Encourages agency and stakeholder participants to jointly monitor how well the agreed-upon process is working, to improve it as needed, and when completed, to identify any lessons learned.
- Encourages mutually supportive and coordinated multimodal transportation and land-use decisions.
- Draws upon a full range of communication and visualization tools to better inform stakeholders, encourage dialogue, and increase credibility of the process.

- Results of Joint AASHTO/FHWA Context Sensitive Solutions Strategic Planning Process Summary Report, March 2007

2.3 Visualization

The Visualization techniques provide valuable insights into design options which typically lead to better context sensitive solutions. Techniques from hand drawings to 3D animations are useful in explaining project requirements, location challenges, staging procedures and help the public understand the intent and impact of a construction project.

Resources:

Federal High Administration – Visualization in Planning
American Association of State Highway and Transportation Officials - Visualization in Transportation
Washington State Department of Transportation – Visual Engineering Resource Group

2.3.1 Uses and benefits of visualization

Visualization has a large number of uses, such as:

- Concept visualization which gives end users a realistic overview of the project parameters.
- Conflict visualization can show designers where complex project systems interact and help reduce construction errors in the office and the field.

- Building Information Modeling (BIM) or Bridge Information Modeling (BRIM) allows users to coordinate, simulate and communicate projects between designers in 3D.

Benefits (From AASHTO – Visualization in Transportation)

With such a wide range of capabilities and techniques possible, visualization provides the design team (i.e., transportation staff, advisory groups, community leaders, and environmental resource agencies) with a valuable resource. The design team can review the visualization to ensure that they are in consensus with the improvement as planned. This is a valuable check in determining if the proposed improvement the design team anticipated is what is being provided.

Once consensus has been reached, the information can be shared with the public to convey, in an understandable way, what the improvement alternative entails. A typical public involvement workshop is shown in Figure 11. Consensus for the project can be sought and obtained, and the proposed improvement can proceed through design to construction. Visualization can contribute to significant time savings throughout this process.

Visualizations that are accepted by project stakeholders, the public, and those living and working adjacent to the project can also be effective in conveying the design intent to potential bidders as well as to the construction contractor. These individuals often do not participate in the project development process.

- AASHTO - Visualization in Transportation

2.3.2 Visualization case studies

Iowa Falls bridge replacement
The US65 (Oak Street) bridge is one of a trio of open spandrel concrete arch bridges located within a stretch of the Iowa River as it meanders its way through the middle of scenic Iowa Falls. Built in 1928 and listed on the National Register of Historic Places, the existing bridge has served its purpose for over 80 years but has recently been showing its age and is in need of replacement.

The Iowa DOT sought input from the community during the planning stages of project development. The result was a local preference for the concrete arch bridge to be replaced with another arch structure, thus keeping the river free of supporting piers and maintaining the aesthetic appeal of the arch bridge theme prevalent at the two other nearby river crossings in town. An above-deck, steel through-arch bridge type was chosen as the final concept. The new bridge will feature a 42-foot roadway, a sidewalk and a bicycle trail.

Figure 2.3.2-1 Original Concrete Arch Bridge

Figure 2.3.2-2 Replacement Steel Arch Bridge

Massena lateral bridge slide project
The Massena Lateral Bridge Slide project consists of replacing the existing 40' x 30' steel I-beam bridge (FHWA #017840) that was constructed in 1930 and is currently classified as structurally deficient with a sufficiency rating of 38. The proposed bridge replacement is intended to increase the structural capacity of the bridge, improve roadway conditions, and enhance safety by providing a wider roadway.

Construction zone safety will be greatly improved due to the introduction of innovative accelerated bridge construction (ABC) methods (limit traffic interference to a period of nine days or less). Furthermore, by minimizing the need for future maintenance that interferes with traffic flow, congestion and crashes will be reduced.

A video showing the construction process was developed to aid contractors and is located here.
http://www.youtube.com/watch?v=NA-nhOMEn8s

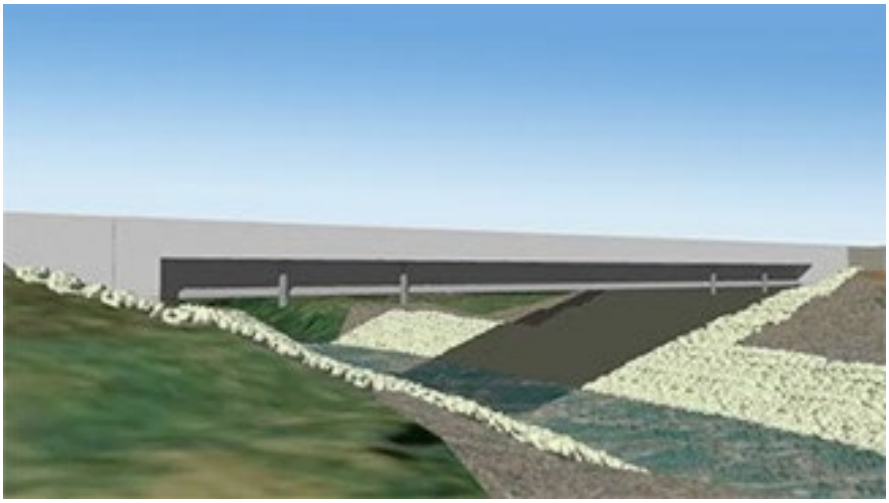

Figure 2.3.3-3 Massena replacement bridge

2.4 Bridge preservation

2.4.1 Introduction

State departments of transportation and other bridge owners are faced with significant challenges in addressing the Nation's highway bridge preservation and replacement needs.

More than 25 percent of the Nation's 600,000 bridges are rated as structurally deficient or functionally obsolete. More than 30 percent of existing bridges have exceeded their 50-year theoretical design life[1] and are in need of various levels of repairs, rehabilitation, or replacement. This issue is exacerbated by increasing travel demands, limited funding, and increasing costs of labor and materials. These circumstances have caused most bridge owners to become more reactive than proactive in their approach to managing and addressing their bridge program needs.

Bridge stewards and owners need to become, inevitably, more strategic by adopting and implementing systematic processes for bridge preservation as an integral component of their overall management of bridge assets.

A successful bridge program seeks a balanced approach to preservation and replacement. Focusing only on replacing deficient bridges while ignoring preservation needs will be inefficient and cost-prohibitive in the long term. Adopting a "worst first" approach to managing bridge assets may also yield ineffective results that allows bridges in good condition to deteriorate into the deficient category which generally is associated with higher costs and other challenges.

The objective of a good bridge preservation program is to employ cost effective strategies and actions to maximize the useful life of bridges. Applying the appropriate bridge preservation treatments and activities at the appropriate time can extend bridge useful life at lower lifetime cost.

Preservation activities often cost much less than major reconstruction or replacement activities. Delaying or forgoing warranted preservation treatments will result in worsening condition and can escalate the feasible treatment or activity from preservation to replacement. The latter will result in extensive work and higher cost. A viable alternative is timely and effective bridge preservation of sound bridges to assure their structural integrity and extend their useful life before they require replacement.

Source: FHWA Publication Number: FHWA-HIF-11042

Bridge preservation - definition
Bridge preservation is defined as actions or strategies that prevent, delay or reduce deterioration of bridges or bridge elements, restore the function of existing bridges, keep bridges in good condition and extend their life. Preservation actions may be preventive or condition-driven.

Source: FHWA Bridge Preservation Expert Task Group.3

Bridge preservation - commentary
Effective bridge preservation actions are intended to delay the need for costly reconstruction or replacement actions by applying preservation strategies and actions on bridges while they are still in good or fair condition and before the onset of serious deterioration. Bridge preservation encompasses preventive maintenance and rehabilitation activities (refer to figure 1).
An effective bridge preservation program:

1. Employs long-term strategies and practices at the network level to preserve the condition of bridges and to extend their useful life;
2. Has sustained and adequate resources and funding sources; and
3. Has adequate tools and processes to ensure that the appropriate cost effective treatments are applied at the appropriate time.

Preventative maintenance - definition
Preventive maintenance is a planned strategy of cost-effective treatments to an existing roadway system and its appurtenances that preserves the system, retards future deterioration, and maintains or improves the functional condition of the system (without substantially increasing structural capacity). Source:

AASHTO Subcommittee on Maintenance.

TABLE OF CONTENTS ~ PRELIMINARY DESIGN OF BRIDGES

3 Preliminary
- 3.1 General
  - 3.1.1 Policy overview
  - 3.1.2 Design information
  - 3.1.3 Definitions
  - 3.1.4 Abbreviations and notation
  - 3.1.5 References
    - 3.1.5.1 Direct
    - 3.1.5.2 Indirect
- 3.2 Bridges
  - 3.2.1 Identification numbers
  - 3.2.2 Stream and river crossings
    - 3.2.2.1 Hydrology
    - 3.2.2.2 Hydraulics
    - 3.2.2.3 Backwater
    - 3.2.2.4 Freeboard
    - 3.2.2.5 Road grade overflow
    - 3.2.2.6 Streambank protection
    - 3.2.2.7 Scour
    - 3.2.2.8 Riverine Infrastructure Database
    - 3.2.2.9 Datum Correlation
    - 3.2.2.10 Stream Stability
    - 3.2.2.11 State Water Trail and Paddling Routes
- 3.3 Highway crossings
  - 3.3.1 Clearances
  - 3.3.2 Ditch drainage
- 3.4 Railroad crossings
  - 3.4.1 BNSF, UP, CN, and CPKC overhead structures
    - 3.4.1.1 Vertical clearance
    - 3.4.1.2 Horizontal clearance
    - 3.4.1.3 Piers
    - 3.4.1.4 Bridge berms
    - 3.4.1.5 Drainage
    - 3.4.1.6 Barrier rails and fencing
  - 3.4.2 Non-BNSF, UP, CN and CPKC overhead structures
    - 3.4.2.1 Vertical clearance
    - 3.4.2.2 Horizontal clearance
    - 3.4.2.3 Piers
    - 3.4.2.4 Bridge berms
    - 3.4.2.5 Drainage
    - 3.4.2.6 Barrier rails and fencing
  - 3.4.3 Underpass structures
  - 3.4.4 Submittals
- 3.5 Pedestrian and shared use path crossings
- 3.6 Superstructures
  - 3.6.1 Type and span
    - 3.6.1.1 CCS J-series
    - 3.6.1.2 PPCB
    - 3.6.1.3 CWPG [AASHTO-LRFD 2.5.2.6.3]
    - 3.6.1.4 Cable/Arch/Truss
  - 3.6.2 Width
    - 3.6.2.1 Highway
    - 3.6.2.2 Sidewalk, shared use path, and bicycle lane

3.6.3 Horizontal curve
3.6.3.1 Spiral curve
3.6.4 Alignment and profile grade
3.6.5 Bridge Deck Cross Slopes
3.6.6 Deck drainage
3.6.7 Bridge inspection/maintenance accessibility
3.6.8 Railings [AASHTO-LRFD 13.7.2]
3.6.8.1 Barrier Rail End Treatments
3.6.8.2 Separation Rail
3.6.9 Staging
3.7 Substructures
3.7.1 Skew
3.7.2 Abutments
3.7.3 Berms
3.7.3.1 Slope
3.7.3.2 Toe offset
3.7.3.3 Berm slope location table
3.7.3.4 Recoverable berm location table
3.7.3.5 Slope protection
3.7.3.6 Grading control points
3.7.3.7 Mechanically Stabilized Earth (MSE) Walls adjacent to abutments
3.7.4 Piers and pier footings [AASHTO-LRFD-2020 3.6.5]
3.7.5 Wing walls
3.7.6 Foundation Conflicts
3.8 Cost estimates
3.9 Type, Size & Location Plans (TS&Ls)
3.10 Permits and Approvals
3.10.1 Waterway
3.10.2 Railroad
3.10.3 Highway
3.11 Forms
3.12 Noise Walls
3.13 Submittals
3.14 Zone of Intrusion
3.15 Temporary Bridges
3.16 Resiliency/Climate Change

3 Preliminary

3.1 General

The following series of articles provides a set of guidelines for development of type, size, and location (TS&L) plans for bridges, walls, and culverts that require final design. The TS&L plans will include a Preliminary Situation Plan and may additionally include Site Plan or Miscellaneous Detail sheets. Within the guidelines and throughout the development of TS&L plans it is important that the designer apply sound engineering judgment, including technical and economic analysis. For additional information on culvert design, see BDM Section 4.

Additional information regarding preliminary design is also contained within BDM Section 1.

3.1.1 Policy overview

Within the Bridges and Structures Bureau, the Preliminary Bridge Design Unit develops the concepts and the preliminary layouts for highway structures. For bridges, walls, culverts, and miscellaneous structures that require final design, the Unit assembles information and develops TS&L sheets so that a designer in

one of the Final Design Units can perform the structural design and develop final plans for a contract letting.

The preliminary design process for new or replacement structures begins with a concept statement developed by the Preliminary Road Design Unit within the Design Bureau. The Preliminary Bridge Design Unit contributes to the concept statement by providing the type and size of the proposed structure along with its estimated construction cost.

The development of all preliminary structure plans includes a number of tasks such as:

- Analyzing hydrology and hydraulics;
- Analyzing road geometrics;
- Determining the type, size, and location of structures;
- Developing a layout in the CADD system;
- Attending field reviews;
- Coordinating with other Iowa DOT Bureaus, public entities, and outside agencies;
- Estimating cost alternatives;
- Obtaining flood plain permit approvals;
- Coordinating with other regulatory agencies; and
- Consideration of accelerated bridge construction (ABC).

3.1.2 Design information

The designer will need to access information from several sources to perform preliminary design, including the following:

- Plans for existing structures, including as-built plans, from Electronic Records Management System (ERMS) or SIIMS;
- Bridge maintenance reports from ERMS and SIIMS;
- LiDAR ground surfaces (2020 is available from USGS)
- A new site survey from the Design Bureau;
- Soil boring information from the Design Bureau;
- Aerial photographs from the Design Bureau and/or web sites;
- Topographic maps from the Bridges and Structures Bureau, the Design Bureau and/or web sites; and
- Field exams.

Plans for existing structures will give a good indication of the site when an existing structure was built, widened, and/or extended, and comparison with a new survey will indicate any site changes that have occurred since previous construction.

The designer should make appropriate use of CADD to integrate support programs such as Open Bridge Designer (OBD), Open Bridge Modeler (OBM) and Open Road Designer (ORD) when developing type, size, and location (TS&L) plans. For more information on CONNECT Applications, refer to our web site under Automation Tools.

Guidance for concept development can be found on the Iowa DOT website.
Concept Development

3.1.3 Definitions

Annual Exceedance Probability Discharge (AEPD) is an estimate of the flood discharge for the annual flood frequency recurrence intervals as determined by a regional regression analysis method described in USGS SIR 2013-5086.

Average low water is the water level expected during a normal season and may be defined by the vegetation line along a stream bank or by typical low flow. The average low water can generally be

represented by the water surface elevation at time of survey or can be defined as one foot above the average design stream bed.

Backwater is caused by the encroachment of the road embankment onto the floodplain which constricts flood flows through the bridge opening. Backwater is the difference between the modeled water surface elevations for topography being evaluated and the base topographic condition. Backwater for the purpose of the hydraulic data block is determined at the modeled upstream location with the maximum difference between proposed and pre-development water surface elevations.

Base Flood is the flood having a one percent chance of being equaled or exceeded in any given year. This is the regulatory standard also referred to as the “100-year flood.” The base flood is the national standard used by the National Flood Insurance Program (NFIP) and all Federal agencies for the purposes of requiring the purchase of flood insurance and regulating new development.

Base Flood Elevation (BFE) is the computed elevation to which floodwater is anticipated to rise during the base flood. BFEs are shown on Flood Insurance Rate Maps (FIRMS) and on the flood profiles. The BFE is the regulatory requirement for the elevation or flood-proofing of structures. The relationship between the BFE and a structure’s elevation determines the flood insurance premium.

Berm slope location table (BSLT) gives toe and top of berm information to aid the contractor in construction of the berm.

Bicycle lane or **bike lane** is a portion of a roadway which has been designated by striping, signing, and pavement markings for the preferential or exclusive use of bicyclists.

Bridge chord is defined as the straight line between intersection points of the centerline approach roadway (or alignment baseline) at the centerline of bridge abutments.

Censored gage record includes discharges (low and high outliers) and historical flood discharges that the USGS may adjust or integrate for use in peak flow analysis. There are two types of censored data (1) annual peak discharges collected at gage sites for which the discharge is only known to be less than the minimum recordable discharge threshold, or (2) in the case of historical periods, annual peak discharges that are only known not to have exceeded a recorded historical flood discharge.

Channel Low Beam / Freeboard is the bottom of the lowest low beam spanning the surveyed or anticipated extent of the channel within the bridge waterway. It may be located on the upstream or downstream side. It is utilized to determine the available space the design provides for passage of ice and debris.

Check scour is based on the occurrence of a 500-year or lesser flood used to ensure pile capacity and stability will not fail at the extreme scour event.

Detailed Flood Insurance Study (FIS) analysis of a community’s flood prone areas which determines the 100-year flood elevation and floodway for certain streams.

Design flood for Iowa DOT bridges is typically the 100-year flood.

Design scour is based on the occurrence of a 200-year or lesser flood used to evaluate pile capacity and stability.

Design streambed elevation is the theoretical thalweg elevation at a proposed structure. Based on the streambed profile where the profile has been developed by extrapolation of up and downstream thalweg elevations that are beyond the influence of existing structures (local scour).

Drainage Districts in Iowa provide a legally organized means to construct and maintain adequate drainage outlets and levees. In most cases, the Board of Supervisors in the county in which the district is

located becomes the board of trustees (managing board) for that district. When designing a replacement structure that crosses a Drainage District, coordination is required. Design features such as flowline, channel slope, cross section, etc. may be dictated by the Drainage District requirements.

Drainage Easement (a.k.a. Permanent Easement for Drainage Purposes) – A Drainage Easement is a legal document that describes the right to increase flow upon a property owner as a result of impacts associated with a project. Typically, the area identified as a Drainage Easement is a draw or drainage way. Another application would be when areas are inundated that otherwise would not be impacted by a project (e.g., lowering of a private levee to meet bridge backwater requirements). The property owners are provided compensation by acquiring the easement and the document is filed with the County Recorder. The designer shall show the limits of the drainage easement along the draw/drainage way for acquisition as part of the B1/B2 submittal. An elevation is typically not provided for a drainage easement.

Electronic Reference Library (ERL) contains plans, specifications, and manuals and is available on the Iowa Department of Transportation's web site.

Electronic Records Management System (ERMS) has been developed to enable electronic use and management of documents within the Iowa Department of Transportation. ERMS includes aerial photographs, existing bridge plans, bridge inspection records, and other documents useful for preliminary bridge design.

EMA/MGB is the method used in Scientific Investigations Report 2013-5086 to compute log-Pearson Type III exceedance probability analysis for stream gages evaluated for use in the development of the Iowa regional regression equations. The method allows for the integration of censored (low and high outliers) and historical peak-discharge data in the analysis. This is the method used in the updated Bulletin 17C "Guidelines for Determining Flood Flow Frequency".

Existing condition reflects the current (at time of study) topography for hydraulic modeling, including the existing development being evaluated.

Expected moments algorithm (EMA) is an annual exceedance-probability analysis method used for continuous-record stream gages. EMA analysis method needs a consistent statistical test (MGB) to identify potentially influential low flows in an annual peak-discharge series to properly reduce the effect of low outliers.

Extreme highwater is the highest water level recorded for a particular location. Information can be obtained from USGS or Corps flood reports, when available.

Flowage Easement – A Flowage Easement is a legal document that describes the right to create a flood elevation upon a property. Typically, the area identified for a flowage easement does not meet regulatory backwater criteria for a project that requires a flood plain permit. The flowage easement is required by the DNR to mitigate the impacts of a project not meeting their backwater criteria. The property owners are provided compensation by acquiring the easement and the document is filed with the County Recorder. The designer shall include the areas that do not meet backwater criteria and the associated 100-year stage elevation as part of the B1 submittal.

Floodway is the portion of the floodplain that must be left unobstructed for the conveyance of the 100-year flood.

Flood Risk Reduction Project (FRRP) is typically defined as a Corps of Engineers designed flood protection levee system.

Freeboard is the vertical clearance measured between the channel or operational low beam, and the stage for the given discharge with the proposed bridge in place.

Grading surface is the finished earthwork surface within the limits of project grading and the existing ground surface outside the limits of project grading. At locations where the finished earthwork surface represents non-earthen materials (rock revetment, concrete block mats, pavement etc.) plan details will define the grading surface relative to these materials. Earthwork quantities are calculated relative to the grading surface. Key bridge berm grading surface points shall be defined in the Berm Slope Location Table [BDM 3.7.3.3].

Hydraulic Grade Line (HGL) is used to derive the design slope for use in the hydraulic design of the structure. HGL is the top of water, and the slope of the HGL at the point of interest is assumed as representative of the slope of the Energy Grade Line (S_o) used in hydraulic design.

Inundation of beams occurs when the flood stage reaches the bottom of the lowest beam anywhere along the entire bridge (operational low beam).

Mean highwater (MHW) is a term used in the AASHTO Guide Specification for Vessel Collision Design of Highway Bridges and is defined by the Coast Guard as the average of the height of the diurnal (each day) high waters at a particular location measured over a period of 19 years.

Multiple Grubbs-Beck (MGB) test is a statistical method to identify low gage data outliers that depart substantially from the trend of the rest of the annual peak discharge data. Annual peak discharges identified as low outliers by the method are excluded from the dataset. EMA/MGB exceedance-probability analysis computed for the Scientific Investigations Report 2013-5086 used the MGB test for the development of the skew analysis and the Iowa regional regression equations.

Multi-region basin is a site drainage area that drains more than one hydrologic region (crosses a hydrologic region boundary) as defined by a given USGS methodology for calculating annual exceedance probability discharges.

National Bridge Inspection Standards (NBIS) This program requires inspection of all publicly owned highway bridges longer than 20 feet defined at intervals not to exceed 24 months, or as otherwise approved for a specific situation.

Natural Stage/Normal Stage is the stage in the bridge waterway related to pre-development conditions.

Operational low beam / Freeboard is the bottom of the lowest low beam along the entire bridge for use in identifying the stage in which beam inundation will begin to occur. It may be located on the upstream or downstream side.

Ordinary high water mark means that line on the shore established by the fluctuations of water and indicated by physical characteristics such as clear, natural line impressed on the bank, shelving, changes in the character of soil, destruction of terrestrial vegetation, the presence of litter and debris, or other appropriate means that consider the characteristics of the surrounding areas [Code of the Federal Register 33 CFR Part 328.3].

Ponding Easement – A Ponding Easement is a legal document that typically describes the right to increase a ponding elevation upon a property owner as a result of impacts associated with a project. Typically, this has been used when a roadway project fills in a low area or prairie pothole. The reduction in storage volume is compensated via a Ponding Easement for a potential increase in inundation area as a result of the roadway fill. The property owner is provided compensation by acquiring the easement and the document is filed with the County Recorder. The designer shall include the boundaries of the ponding easement and an elevation for acquisition of the easement as part of the B2 submittal. The elevation should be the maximum elevation that could occur before water is able to convey out of the depression/prairie pothole.

Pre-Development condition is a topographic assumption for hydraulic modeling with the development being evaluated removed (e.g. existing roadway embankment with associated structures). Adjacent topography is included in the Pre-Development condition if it is not a part of the development being evaluated. Pre-Development condition is analogous to natural condition referenced in Iowa DNR floodplain development regulations.

Proposed condition reflects the current (at time of study) topography for hydraulic modeling including the proposed development being evaluated.

Q50 is a flood that has a 2% statistical probability (chance) of being equaled or exceeded in any year.

Q100 is a flood that has a 1% statistical probability (chance) of being equaled or exceeded in any year.

Revetment is a relatively general term for a facing that supports an embankment. **Riprap** is a more specific term for the layer of various sized rocks or broken concrete used to protect a streambank from erosion. With respect to streambank protection the terms **revetment** and **riprap** usually are interchangeable. **Revetment Stone** is the quarry industry's product that may be used for streambank erosion protection.

Riverine Infrastructure Database is a database of Iowa Department of Transportation facilities in the riverine environment. The database consists of location data in addition to hydrologic and hydraulic data so impacts to facilities during a flood event can be rapidly evaluated.

Section 408 Approval is required from the Corps of Engineers for any project within 300 feet riverward or 500 feet landward of a Corps Flood Risk Reduction Project (FRRP).

Shallow bedrock at a pier may be conservatively defined as rock, regardless of type (e.g. shale, limestone, etc.) and quality (e.g. solid, hard, broken, weathered, highly weathered, etc.), that is 30 feet or less from the lowest of the ground line, stream bed, or design scour elevation.

Shared use path is a bikeway physically separated from motorized vehicular traffic by an open space or a barrier and either within the highway right-of-way or within an independent right-of-way. Shared use paths may also be used by pedestrians, skaters, wheelchair users, joggers, and other non-motorized users. See the current edition of AASHTO's *Guide for the Development of Bicycle Facilities* [BDM 3.1.5.2].

Span chord is defined as the straight line between intersection points of the centerline approach roadway (or alignment baseline) at the centerline of each substructure unit.

Stage is the water surface elevation for a given discharge and site conditions being evaluated. Stage for the purpose of the hydraulic data block is the engineer's best estimate of the PROPOSED water surface elevation within the bridge waterway. The stage determination depends on the hydraulic analysis model type, as described in the policy guidance.

Streambed Profile (SP) is a profile based on design streambed elevation (thalweg) up and downstream of the proposed structure.

Structure Inventory and Inspection Management System (SIIMS) is the single source location for entering and reviewing condition information on all Iowa bridges, both local and state owned. The system provides a data base of bridge sized structures and inspection information. Preliminary engineers can find site photos, As-Built plans, and ground profile (cross section) under the bridge.

Thalweg is a line extending down a channel that follows the lowest elevation of the stream bed.

Uncensored gage record includes peak discharge data at given gage site, exclusive of censored record. Uncensored data represents actual observed values, whereas censored data reflects historical or

otherwise estimated data values. Statistics developed using only uncensored data will generally be presented as 'period-of-record' whereas statistics that include censored data generally be presented as 'historical period'.

Unit Leader is the supervisor of the Bridges and Structures Bureau Preliminary Bridge Unit, Final Design Unit, or Consultant Coordination Unit.

Weighted Independent Estimate (WIE) is a method for weighting two independent estimates inversely proportional to their associated variances. Annual exceedance-probability discharges (AEPD) by the log-Pearson Type III estimate (EMA/MGB) and the regional regression equations are assumed to be independent and can be weighted by this method and the variance of the weighted estimate will be less than the variance of either of the independent estimates.

3.1.4 Abbreviations and notation

3R, Resurfacing, Restoration, Rehabilitation; a series of terms that refers to a Federal Highway Administration highway project funding program
ADT, average daily traffic
AEPD, annual exceedance-probability discharge
AREMA, American Railway Engineering and Maintenance-of-Way Association
B0, event code for Bridges and Structures Bureau concept
B1, event code for Bridges and Structures Bureau layout
B2, event code for structural/hydraulic design plans to Design Bureau
BFE, base flood elevation
BTB, BTC, BTD, BTE, standard cross sections for pretensioned prestressed concrete bulb tee beams
BNSF, Burlington Northern Santa-Fe Railway
BSLT, berm slope location table
CCS, continuous concrete slab
CFR, Code of Federal Regulations
CLOMR, Conditional Letter of Map Revision issued by FEMA
CMP, corrugated metal pipe
CWPG, continuous welded plate girder
D_{50}, median revetment stone diameter
D0, event code for predesign concept
D2, event code for design field exam
DA, drainage area
EMA, expected moments algorithm annual exceedance-probability analysis
ERL, Electronic Reference Library
ERMS, Electronic Records Management System
FEMA, Federal Emergency Management Agency
FHWA, Federal Highway Administration
FIS, Flood Insurance Study
HDPE, high density polyethylene
HEC-2, U.S. Army Corps of Engineers **H**ydrologic **E**ngineering **C**enter hydraulic analysis software
HEC-RAS, U.S. Army Corps of Engineers **H**ydrologic **E**ngineering **C**enter – **R**iver **A**nalysis **S**ystem hydraulic analysis software
HGL, Hydraulic Grade Line
IAC, Iowa Administrative Code
IFC, Iowa Flood Center
IFIS, Iowa Flood Information System
IFI, intermediate foundation improvement
IHRB, Iowa Highway Research Board
Iowa DNR, Iowa Department of Natural Resources
Iowa DOT, Iowa Department of Transportation
LOMR, Letter of Map Revision issued by FEMA
LP3, log-Pearson Type III

LT, left
M, distance between chord and arc at midpoint of horizontally curved bridge [BDM 3.6.3]
MCS, main-channel slope, a variable in USGS WRIR 03-4120
MGB, Multiple Grubbs-Beck low-outlier test
MSE, mechanically stabilized earth, generally associated with retaining walls
N or N-value, standard penetration test number of blows per foot. N also may be given as SPT NO, the Standard Penetration Test Number in the soils information chart.
n-coefficient, Manning's Coefficient [BDM 3.2.2.3]
NBIS, National Bridge Inspection Standards
NFIP, National Flood Insurance Program
NHS, National Highway System
NOAA, National Oceanic and Atmospheric Administration
NRCS, Natural Resources Conservation Service
OBD, Open Bridge Designer
OBM, Open Bridge Modeler
ORD, Open Roads Designer
PE, preliminary engineering
PEP, polyethylene pipe
POT, point on tangent
PPCB, pretensioned prestressed concrete beam
Q_2, Q_{50}, Q_{100}, Q_{200}, Q_{500}, estimated channel discharge at 2-, 50-, 100-, 200- or 500-year design flood frequency
RBLT, recoverable berm location table
RCB, reinforced concrete box, a type of culvert
RCP, reinforced concrete pipe
RDD, Road Design Details
RIDB, Riverine Infrastructure Database
ROW, right of way
RRE, regional regression equation
RSB, rolled steel beam
RSS, reinforced steepened slope
RT, right
SI&A, Structure Inventory and Appraisal
SIIMS, Structure Inventory and Inspection Management System
SIR, scientific investigations report
SP, streambed profile
SRP, Standard Road Plans
SUDAS, (Iowa) Statewide Urban Design and Specifications
TS&L, type, size, and location
TSS, Texas single slope
UP or **UPRR,** Union Pacific Railroad
USGS, United States Geological Survey
WIE, weighted independent estimates
WRIR, water-resources investigation report

3.1.5 References

3.1.5.1 Direct

[IDOT PPM policy number] refers to a policy in the Iowa Department of Transportation *Policies and Procedures Manual.*

[IDOT SS article] refers to Iowa Department of Transportation *Standard Specifications for Highway and Bridge Construction* with article number. (Available on the Internet at: https://iowadot.gov/erl/index.html)

[DB DM article, table, or figure] refers to the Design Bureau, Highway Division *Design Manual* with article, table, or figure number. (Available on the Internet at: https://iowadot.gov/design/Design-manual)

[DB RDD sheet number] refers to the Design Bureau, Highway Division "Road Design Details" with sheet number. Formerly the detail manual was referred to as the "green book." (Available on the Internet at: https://iowadot.gov/design/Road-design-details)

[DB SRP sheet number] refers to an Design Bureau, Highway Division "Standard Road Plan" with sheet number. Formerly the plan manual was referred to as the "red book." (Available on the Internet at: https://iowadot.gov/design/Standard-road-plans)

3.1.5.2 Indirect

American Association for State Highway and Transportation Officials (AASHTO). *A Policy on Design Standards—Interstate System, 6th Edition*. Washington: AASHTO, 2016.

American Association for State Highway and Transportation Officials (AASHTO). *Guide for the Development of Bicycle Facilities, 4th Edition.* Washington: AASHTO, 2012.

American Association for State Highway and Transportation Officials (AASHTO). *Roadside Design Guide, 3rd Edition*. Washington: AASHTO, 2002.

American Association for State Highway and Transportation Officials (AASHTO). *LRFD Bridge Design Specifications, 8th Edition,* Washington: AASHTO, 2017.

American Railway Engineering and Maintenance-of-Way Association (AREMA). *Manual for Railway Engineering.* American Railway Engineering and Maintenance-of-Way Association, Lanham, MD, 2019.

BNSF Railway – Union Pacific Railroad. *Guidelines for Railroad Grade Separation Projects.* Union Pacific Railroad, Omaha, NE,2016. (Available on the Union Pacific web site at: https://www.up.com/cs/groups/public/documents/up_pdf_nativedocs/pdf_rr_grade_sep_projects.pdf)

Bradley, Joseph N. *Hydraulics of Bridge Waterways, HDS 1*. Washington: Federal Highway Administration (FHWA), 1978. (By request, a copy can be provided by Iowa DOT.)

Cronshey, R., R.H. McCuen, N. Miller, W. Rawls, S. Robbins, and D. Woodward. *Urban Hydrology for Small Watersheds, 2nd Edition, 210-VI-TR-55.* Washington: Natural Resources Conservation Service (NRCS), 1986. (Current edition of Technical Release 55 (TR-55); available on the U.S. Department of Agriculture web site at: https://data.nal.usda.gov/dataset/small-watershed-hydrology-wintr-55)

Eash, David A. *Techniques for Estimating Flood-Frequency Discharges for Streams in Iowa, WRIR 00-4233.* Iowa City: U.S. Geological Survey (USGS), 2001.

Eash, David A., K.K. Barnes, and A.G. Veilleux. *Methods for Estimating Annual Exceedance –Probability Discharges for Streams in Iowa, Based on Data through Water Year 2010* Scientific Investigations Report 2013-5086; (Available on the Iowa USGS web site at: http://pubs.usgs.gov/sir/2013/5086)

Eash, David A. *Main-Channel Slopes of Selected Streams in Iowa for Estimation of Flood-Frequency Discharges, WRIR 03-4120.* Iowa City: U.S. Geological Survey (USGS), 2003

Eash, David A. *Comparisons of Estimates of Annual Exceedance-Probability Discharges for Small Drainage Basins in Iowa, Based on Data through Water Year 2013, SIR 2015-5055.* U.S. Geological Survey (USGS), 2015. (Available on the USGS website at: https://pubs.usgs.gov/sir/2015/5055/pdf/sir2015-5055.pdf)

Federal Highway Administration. “Hydraulic Engineering” web page with links to publications and software. http://www.fhwa.dot.gov/engineering/hydraulics/index.cfm

Federal Highway Administration. *Recording and Coding Guide for the Structure Inventory and Appraisal of the Nation’s Bridges, FHWA-PD-96-001.* Washington: Federal Highway Administration, 1995.

Golden Hills Resource Conservation and Development, Inc. *Stream Stabilization in Western Iowa: Structure Elevation and Design Manual, Iowa DOT HR-385.* 1998. (Available on the State Library of Iowa web site at: https://publications.iowa.gov/16075/)

Hadish, G.A., M. Braster, R.A. Lohnes, and C.P. Baumel. *Stream Stabilization in Western Iowa, Iowa DOT HR-352.* 1994. (Available on the Iowa DOT web site at: https://iowadot.gov/research/reports/Year/2003andolder/fullreports/hr352.pdf)

Iowa Administrative Code. Des Moines: Legislative Services Agency. (Available on the Iowa Legislature website)

Iowa Department of Natural Resources. *How to Control Streambank Erosion*. Des Moines: Iowa Department of Natural Resources, 2005. (Available from the Iowa DNR web site at: http://www.iowadnr.com/water/stormwater/forms/streambank_man.pdf)

Iowa Department of Transportation. *Iowa Bicycle and Pedestrian Long Range Plan*. Ames, IA: 2018. (Available on the Iowa dot web site at: https://iowadot.gov/iowainmotion/files/Bike-and-Pedestrian-Plan.pdf)

Iowa State University. *SUDAS Standard Specifications*. Iowa State University, Ames, IA, 2011. (Available on the SUDAS web site at: https://iowasudas.org/manuals/design-manual/))

Lagasse, P.F., J.D. Schall, and E.V. Richardson. *Stream Stability at Highway Structures, Third Edition; Hydraulic Engineering Circular No. 20 (HEC-20)*. Washington: Federal Highway Administration (FHWA), 2001. (Available on the FHWA web site at: https://www.fhwa.dot.gov/engineering/hydraulics/pubs/hec/hec20ed3.pdf)

Lagasse, P.F., P.E. Clopper, J.E. Pagan-Ortiz, L.W. Zevenbergen, L.A. Arneson, J.D. Schall, and L.G. Girard. *Bridge Scour and Stream Instability Countermeasures: Experience, Selection and Design Guidance, Volumes 1 and 2, Third Edition; Hydraulic Engineering Circular No. 23 (HEC-23).* Washington: Federal Highway Administration (FHWA), 2009. (Available on the FHWA web site at: https://www.fhwa.dot.gov/engineering/hydraulics/pubs/hec/hec23ed2.pdf)

Lara, Oscar G. *Method for Estimating the Magnitude and Frequency of floods at Ungaged Sites on Unregulated Rural Streams in Iowa, WRIR 87-4132.* Iowa City: U.S. Geological Survey (USGS), 1987.

Larimer, O.J. *Drainage Areas of Iowa Streams.* U.S. Geological Survey (USGS), Iowa Highway Research Board Bulletin No. 7 (Red Book). (Available on the Iowa DOT web site at: https://www.iowadot.gov/research/reports/Year/2003andolder/fullreports/HR-29%20FINAL%20Drainage%20Areas%20of%20Iowa%20Streams.pdf)

Laursen, E.M. and A. Toch. *Scour Around Bridge Piers and Abutments, Iowa Highway Research Board Bulletin No. 4.* Iowa City: Iowa Institute of Hydraulic Research, 1956. (Available on the Iowa DOT web site at: https://iowadot.gov/research/reports/Year/2003andolder/fullreports/hr30.pdf)

Norman, J.M., R.J. Houghtalen, and W.J. Johnston. *Hydraulic Design of Highway Culverts, Second Edition; HDS No. 5.* Washington: Federal Highway Administration (FHWA), 2001

Richardson, E.V. and S.R. Davis. *Evaluating Scour at Bridges, Fifth Edition; Hydraulic Engineering Circular No. 18 (HEC-18).* Washington: Federal Highway Administration (FHWA), 2012. (Available on the FHWA web site at: https://www.fhwa.dot.gov/engineering/hydraulics/pubs/hif12003.pdf)

3.2 Bridges

The information in the following articles for preliminary design of bridges generally is organized by task in the design process. The sequence of the tasks for a specific design project will not necessarily follow the sequence in this article but, before completing a preliminary design, the designer should review the information on each of the following topics that are applicable.

- Identification numbers
- Stream and river crossings
- Highway Crossings
- Railroad crossings
- Pedestrian and Shared Use Path Crossings
- Superstructures
- Substructures
- Cost estimates
- Preliminary Situation plans (TS&Ls)
- Permits and approvals
- Forms
- Noise Walls
- Submittals
- Zone of Intrusion
- Temporary Bridges
- Resiliency/Climate Change

When developing the site for bridge projects the designer should endeavor to use standards as much as possible. The Bureau has standard bridges described in the superstructures article:

- Three-span continuous concrete slab (CCS) bridges, J-series [BDM 3.6.1.1],

Additionally, the Bureau has several series of standard pretensioned prestressed concrete beams [BDM 3.6.1.2] that may be used to assemble bridges. For spans above 155 feet or for bridges on significant horizontal curves the designer may select a continuous welded plate girder superstructure [BDM 3.6.1.3].

The designer shall document the key details that lead to the proposed bridge configuration with a Preliminary Bridge TSL Development Report. See the commentary for an example.

3.2.1 Identification numbers

A new bridge sized structure will be assigned three identification numbers: a bridge design number, an FHWA number, and a bridge maintenance number. DOT preliminary design unit staff need only assign the bridge design number and request the FHWA number; bridge maintenance numbers are assigned later by others. Assigning the bridge design number requires consideration of record keeping, letting dates, and final design plan preparation. A bridge sized structure widening, repair, or RCB extension becomes part of the existing structure, and no new FHWA number is required.

A structure is “bridge sized” if the structure as measured along the centerline of roadway is greater than 20 feet in length between undercopings of abutments or spring lines of arches, or extreme ends of openings for multiple boxes; it may also include multiple pipes, where the clear distance between openings is less than half of the smaller contiguous opening. Bridge sized structures shall be assigned an FHWA number, as they are required to meet National Bridge Inspection Standards (NBIS). When the proposed structure is bridge sized and within 300 feet from the centerline of the existing FHWA numbered structure, a replacement FHWA number should be assigned. Otherwise a new FHWA number should be assigned. A twin 8’ x 8’ RCB with a 9-inch interior wall would require an FHWA number if constructed at a 34-degree or greater skew to the roadway since the extreme ends of opening distance along the roadway

would be greater than 20 feet. On replacement projects, the existing and proposed structure's FHWA number shall be shown on the proposed TS&L. Design numbers for temporary bridges utilized for on-site detours shall be assigned under the replacement bridge FHWA number.

Each bridge should be assigned a separate design number even if there are two bridges with the same geometry in the same letting. A bridge with a common approach roadway crown that requires a 2-inch separation to reduce temperature forces should be assigned one design number if both portions are in the same letting. However, if a bridge is separated by a 2-inch gap with a separate roadway approach crown, two design numbers should be assigned. The designer shall consult with the Preliminary Bridge Design Unit Leader if there are any unique situations for assigning design numbers.

Structures that are less than bridge sized (non-NBIS structures) requiring final structural design shall be similarly assigned a design number (RCBs, bottomless culverts, pipes with special inlets or flumes, etc.). However, an Asset ID number is assigned for non-NBIS structures in lieu of an FHWA number. DOT preliminary design unit staff may need to request the Asset ID. Maintenance numbers are not assigned to non-NBIS structures. For additional information on structure ID number assignment procedure and the electronic documentation system policy organized by Asset ID, please refer to BDM 1.11.4. Once an Asset ID is assigned to a structure that is less than bridge sized, a future structure repair, widening, or extension, etc. becomes part of the existing structure asset ID, and no new Asset ID number is required.

For corridor projects the preliminary designer shall assign a file number for each preliminary engineering (PE) number. For smaller projects without a PE number, assign a file number for each project. To minimize file numbers, miscellaneous structures generated before a project is complete shall be associated with the original file number.

3.2.2 Stream and river crossings

Stream and river crossings require the designer to consider the waterway in detail and, in some cases, obtain permits for the bridge. The topics listed below are to be considered in design of bridges over streams and rivers and are discussed in sub-articles that follow.

- Hydrology
- Hydraulics
- Backwater
- Freeboard
- Roadgrade overflow
- Streambank Protection
- Scour
- Riverine Infrastructure Database
- Datum Correlation
- Stream Stability
- State Water Trails and Paddling Routes

Design discharges should be based on current methodologies for determining compliance with Iowa DOT policy or Iowa DNR regulations. As a general rule, the design discharge for structures on Iowa's primary highway system is the 100-year flood. For bridge locations where the upstream flood damage potential is high or where the site is located in a detailed Flood Insurance Study (FIS) area, the 100-year flood should be the design discharge.

When a project is located in a detailed FIS area, the published peak discharges and flood elevations are used for evaluating compliance with NFIP criteria. The discharges used to satisfy DNR criteria and for the design of the structure may not be the published FIS discharges. The designer should calculate the following discharges and stage for each bridge:

- Q_2, Q_5, Q_{10}, Q_{25} - when the bridge site rating curve will be included in the Riverine Infrastructure Database
- Q_{25} - when the need for coffer dams is anticipated in a river setting
- Q_{50} - to determine velocity through bridge opening, and freeboard

- Q_{100} - to determine backwater, velocities through the bridge opening, and freeboard
- Q_{200} - to determine design scour
- Q_{500} or $Q_{Overtopping}$ - to determine check (maximum) scour and freeboard

Stage is the water surface elevation for a given discharge. Stage for the purpose of the hydraulic data block and freeboard calculations is covered in BDM 3.2.2.4.

For preliminary design of new or replacement bridges at a waterway crossing, a certified report to document the Hydrology and Hydraulic information is required. See the commentary for more information.

3.2.2.1 Hydrology

Reliable estimates of flood-frequency discharges are essential for the economic planning and safe design of bridges and other structures located over streams. Hydrology for bridges should include the following peak discharges for design: Q_{50}, Q_{100}, Q_{200} and Q_{500} or $Q_{overtopping}$. In special cases the designer may need to determine additional discharges for the project.

The designer has several methods for determining estimated discharges, which are listed below.

- **Federal Emergency Management Agency (FEMA) Flood Insurance Studies (FIS)**
  Many cities and counties in Iowa have detailed FISs. Typically, a community with an FIS has adopted regulations that can prohibit increasing the 100-year flood elevation or encroaching upon a regulated floodway. The discharges and flood elevations in an FIS are usually legally binding and are used by the Iowa Department of Natural Resources for ensuring compliance with NFIP criteria. When a project is located outside the detailed area of an FIS but could impact flood elevations or flood prone properties of an FIS community, the FIS information should be used for analysis.

  In addition to using the FIS 100-year discharge to assure compliance with NFIP requirements, the designer should use current methodologies for estimating peak discharges for the design of structures and to satisfy DNR backwater and freeboard criteria.

- **US Army Corps of Engineers (USACE) Regulated Flow Frequency Studies**
  For streams regulated by reservoirs, the latest USACE flow frequency study for the stream reach should be consulted for Operational discharges to be used in design.

  These streams are:
  - Des Moines River downstream of Saylorville Reservoir.
  - Iowa River downstream of Coralville Reservoir.
  - Missouri River.

  In addition, these documents should be consulted for Reservoir Stage-Frequency data that should be considered in assessing the Operational characteristics of a riverine site, either on the main stem or tributaries of these streams.

- **U.S. Geological Survey (USGS) and U.S. Army Corps of Engineers (USACE) stream gage information**
  Stream gage data may be used for estimation of peak discharges when the structure site is at or near a gaging station and the streamflow record is fairly complete and of sufficient length. Information for stream gages in Iowa is available from USGS and USACE web sites as follows:

  USGS - Iowa Water Science Center:

  USGS - StreamStats - Annual Exceedance-Probability Discharge (AEPD) per Scientific Investigations Report (SIR) 2013-5086. May be updated in the future to use Open File Report 2015-1214:

USGS - SIR 2013-5086 - Methods for Estimating Annual Exceedance-Probability Discharges for Streams in Iowa - Based on Data through Water Year 2010. Provides Expected Moments Algorithm/Multiple Grubbs-Beck (EMA/MGB) and Weighted Independent Estimates (WIE) AEPD's for gage data through water year 2010:

USGS - Statistical summaries of selected Iowa streamflow data through September 2013. Open-File Report 2015-1214 provides EMA/MGB and WIE AEPD's for gage data through water year 2013:

USGS – SIR 2015-5055 - Comparisons of Estimates of Annual Exceedance-Probability Discharges for Small Drainage Basins in Iowa, Based on Data through Water Year 2013 provides a comparison of AEPD estimates from five different AEPD-estimation methods.

USACE – Rock Island District

USACE – Omaha District

Use of USGS Gage Information

If the drainage area at the project site is within 50% of the drainage area of the gage, the gage discharges should be used and transferred to the project site per the method specified in USGS SIR 2013-5086. Generally, a regression-weighted estimate should be utilized to ensure a smooth transition from gage-weighted to regression equation discharge estimates for a stream. When the project site falls between two stream gages (within 50% of gage drainage area per above) an area-weighted estimate should generally be utilized. The gage parameters used for weighting (gage site regression equation discharge or drainage area) should be reviewed for consistency with the project (ungaged) site estimate.

The Iowa DOT AEPD spread sheet, addressed in more detail in the following section, includes estimation of AEPD's at ungaged sites on gaged streams per SIR 2013-5086. Refer to the Iowa DOT AEPD Spread Sheet Usage Guide, Section 4, for additional information on gage weighting methodologies for ungaged sites on gaged streams.

A thorough review of gage derived AEPD estimates at gaged and ungaged sites should be performed. Generally, the published gage AEPD estimates per SIR 2013-5086 will be adequate (data through 2010). AEPD estimates per Open File Report 2015-1214 (data through 2013) can be utilized and may be preferable for sites with limited years of uncensored records (less than 30 yrs.). A request can be made to the USGS through the DOT for updated statistics as required at a gage. Considerations would be limited years of record or significant recent floods not captured by the above reports.

For gaged sites USGS guidelines advise use of the WIE estimate. Since the WIE estimate makes use of a Regional Regression Equation (RRE) AEPD estimate per SIR 2013-5086, applicability of the RRE AEPD used in the WIE estimate should be determined.

For ungaged sites the gage weighted AEPD estimate should be reasonably consistent with the gage AEPD estimate, particularly for gage sites with 25 years or more of uncensored record. For example, that the ungaged site downstream of gaged site has an AEPD estimate greater than gaged site estimate, etc.

If an AEPD estimate using stream gage data is not possible, alternative methods for discharge determination are required.

- **USGS Scientific Investigation Report 2013-5086 RRE estimates**
  Regional Regression methods in SIR 2013-5086 are applicable for streams in Iowa that are not significantly affected by regulation, diversion, channelization, backwater, or urbanization. SIR 2013-5086 has defined three different flood regions for the state. Multi-variable and single-variable regression equations were developed for each region (MRRE2013 and SRRE2013, respectively).

  Drainage area and basin characteristics should be determined by using the USGS web-based GIS tool called Iowa "StreamStats". StreamStats is capable of delineating a watershed from a point and computing the drainage area in square miles. The designer may use LiDAR or other more accurate information to check the results for accuracy and to make and document appropriate corrections. StreamStats will report AEPD's per SIR 2013-5086 regional regression equations.

  If the site meets the above conditions for use of SIR 2013-5086, the drainage basin is larger than 20 square miles, and an Annual Exceedance-Probability Discharge (AEPD) estimation using stream gage data is not possible, the MRRE2013 flood estimation method will typically be used for the design of bridges and culverts.

  For small drainage basins in Iowa (20 square miles or less), the USGS report SIR 2015-5055 provides a comparison of several methods for least bias and best accuracy, including but not limited to MRRE2013 and SRRE2013. For small basins, the SIR 2015-5055 report should be consulted for guidance in selecting the method for estimating bridge or culvert design discharges (see below).

  Iowa AEPD Spread Sheet

  The Iowa DOT has developed an AEPD spread sheet which provides the ability to calculate AEPD's per SIR 2013-5086. The variables for each regression equation, including the Main-Channel Slope (MCS) variable, must be calculated by the StreamStats program. AEPD's per past USGS Regional Regression Equation (RRE) procedures (USGS WRIR 87-4132 & WRIR 00-4233) can also be calculated for comparison purposes.

  The AEPD spread sheet should be used as a tool for comparing the different methodologies to determine if any outliers are present in estimating the AEPD's per SIR 2013-5086. In general, USGS SIR 2013-5086 provides higher peak discharges than the previous regression equations, particularly WRIR 87-4132. If the AEPD spread sheet determines that AEPD's calculated per SIR 2013-5086 are significantly different from those estimated using previous RRE procedures (USGS WRIR 87-4132 & 00-4233), then engineering judgment can be used to adjust SIR 2013-5086 AEPD estimates for the design of bridges and culverts in Iowa. Preliminary Unit Leader approval will be required when a methodology other than USGS SIR 2013-5086 is recommended for proposed design discharges for drainage areas greater than 20 square miles.

  USGS SIR 2013-5086 has defined three different flood regions for the state and utilizes a multi-variable equation for each region. For basins that cross region boundaries (multi-region basins), StreamStats will provide a SIR 2013-5086 RRE AEPD estimate for each region falling in the basin, and a percent of the total basin area for each contributory flood region.

  The AEPD spread sheet can calculate AEPD's for basins that cross region boundaries.

  For multi-region RRE estimates, IaDOT recommendation/policy is to use an additional weighting factor in the RRE estimate for the region where the site is located (outfall region). IaDOT recommendation is to use an outfall region weighting of 2. Refer to the AEPD Spreadsheet Usage Guide referenced above, Section 5, for guidelines on weighting of RRE AEPD multi-region estimates.

- **USGS WRIR 87-4132 and USGS WRIR 00-4233 RRE estimates**
  The regression equations contained in USGS WRIR 87-4132 & WRIR 00-4233 have been superseded. However, the previous reports can be utilized for comparative purposes when engineering judgment is used to estimate peak discharges for the design of bridges and culverts in Iowa. A thorough review of the basin characteristics and history of flooding along with engineering judgement is needed when determining design discharges for small basins. WRIR 87-4132 may be used for small basins (D.A. ~~between~~ ~~2~~ 0.04 (25.6 acres)and 20 square miles).

  See USGS SIR 2015-5055 below for a study to aid in selection of design AEPD-estimation methods for small basins. The USGS WRIR 87-4132 method is identified as the 1987 single-variable RRE (SRRE 1987) estimation method in the 2015 report.

  See commentary for Q50/Q500 Chart to be used with WRIR 87-4132 analysis. The designer shall utilize a frequency discharge curve to determine the Q200.

- **USGS SIR 2015-5055**
  This study compared and evaluated AEPD estimates from five different AEPD-estimation methods for small drainage basins (20 square miles or less):
  - 2013 multi-variable RREs (MRRE2013)
  - 2013 single-variable RREs (SRRE2013)
  - 1987 single-variable RREs (SRRE1987)
  - TR-55 rainfall-runoff model, and
  - Iowa Runoff Chart

  For project drainage basins with less than 20 square miles, the information contained in this report should be utilized to aid in selecting an appropriate method for calculating design AEPD estimates.

- **USGS flood reports**
  Open file flood reports by the USGS have been developed and can be valuable supplemental information when evaluating discharges and water surface elevations. The reports are listed in the commentary and, in some cases, available for download as follows.
  USGS Publications Warehouse

- **Urban Hydrology**
  When development/urbanization is located within the drainage basin, other hydrologic methodologies should be considered to account for the higher runoff potential due to additional impervious areas and the decreased travel time. In general, urban hydrology for a basin should be considered when 25% or more of the watershed has been developed.

  Generally, a lumped parameter hydrologic model is utilized (NRCS losses/unit hydrograph, Rational Method, etc.). A unit hydrograph based methodology is preferred except for relatively small basins. The USGS StreamStats tool for Iowa can provide the basin parameters for the NRCS methodology.

  Hydrologic analysis that use precipitation/frequency relationships should use NOAA Atlas 14, Volume 8: Precipitation-Frequency Atlas of the United States, Midwestern States.

  Rainfall Temporal distribution shall be a ‘Synthetic Storm’ developed from Atlas 14 rainfall data, or the NRCS MSE-/MSE-4 distributions (supersede NRCS Type-II and III distributions).

  Engineering judgment should be used when determining design discharges for basins that have development/urbanization within its watershed.

3.2.2.2 Hydraulics

Once the peak discharges are determined for design, the structure must be analyzed to determine the hydraulic capacity or conveyance of the bridge waterway opening. Bridges with a Q100 average bridge velocity through a waterway opening (Q/A) of 6 feet/second or less typically do not experience excessive scour or backwater. Therefore, it is desirable that the average bridge velocity for a proposed bridge typically be near 6 feet/second. If the Q100 average bridge velocity for a proposed bridge is higher than 8 feet/second, backwater and scour potential needs to be closely reviewed with regard to waterway adequacy.

Bridge hydraulics (freeboard, average bridge velocity, and backwater) can be analyzed by utilizing various hydraulic programs such as HEC-RAS, which are available from the Corps of Engineers or other sources; the Iowa DOT Bridge Backwater program based on the publication *Hydraulics of Bridge Waterways, HDS 1*; which is available from FHWA. For complex hydraulic situations, 2-D models such as TUFLOW, SRH-2D, HEC-RAS2D, MIKE FLOOD, etc. may be used. The designer should be aware of the assumptions and limitations for using the methodology in any hydraulic analysis program.

- **HEC-RAS analysis**
  When a bridge is located within a detailed Flood Insurance Study (FIS) area, or the upstream flood plain has a high damage potential (such as a residence or business located in the upstream flood plain), if the site is not too complex, the designer should perform a HEC-RAS analysis to determine the impacts on flood elevations.

- **Iowa DOT Bridge Backwater program analysis**
  The backwater analysis methodology utilized in the Iowa Bridge Backwater program (HDS-1) has been archived by the FHWA. However, f~~F~~or bridges located in a rural area where the flood plain has a low damage potential, the designer may use the Iowa DOT Bridge Backwater program to analyze concept backwater and freeboard provided the conditions listed below are met.

  (1) The channel is relatively straight.
  (2) The floodplain cross section is fairly uniform.
  (3) The stream slope is approximately constant.
  (4) The flow is free to contract and expand.
  (5) There is no appreciable scour hole in the bed at the constriction.
  (6) The flow is in the sub critical range (Type I, non-pressure flow)
  (7) The bridge superstructure is not inundated sufficiently to create pressure flow.

- **2-Dimensional hydraulic analysis**
  For complex hydraulic locations, a 1-D hydraulic analysis may not adequately capture the effects of flooding and backwater. These locations may include overflow bridges, flood plains with flank or lateral levees and roadways that are significantly skewed to the flood plain. In those situations, 2-D hydraulic models such as TUFLOW, SRH-2D, HEC-RAS2D, MIKE FLOOD, etc. may be more appropriate for analyzing the impacts associated with a bridge project.

3.2.2.3 Backwater

Bridge backwater is caused by the encroachment of the road embankment onto the floodplain which constricts flood flows through the bridge opening. This constriction causes an increase in the normal stage (flood elevation without a bridge and road embankment in place). The maximum backwater typically occurs one or two bridge lengths upstream.

Iowa DNR Criteria-

Iowa DNR backwater criteria are listed in Table 3.10.1-2. In general, bridges should be designed to meet the backwater criteria even when a project does not require Iowa DNR approval. Variances to the backwater criteria can be requested when it is not feasible to meet the backwater criteria and when flowage easements are obtained for all affected landowners of low damage potential areas.

Federal Emergency Management Agency (FEMA) Flood Insurance Studies (FIS) Criteria-

It should be noted that when a project involves development within a regulatory floodway (including bridge piers), the analysis must show that the project will not cause an increase in the 100-year regulatory flood elevation. If a “no rise” condition cannot be obtained when encroaching upon a regulatory floodway, the designer may need to apply to FEMA for revisions to the FIS by means of a Conditional Letter of Map Revision (CLOMR). After a CLOMR is issued and construction is completed a Letter of Map Revision (LOMR) is obtained by submitting as-built plans.

For Iowa DOT projects, a “No-Rise” certification is not required since the Iowa DOT does not obtain approval from local entities (city or county) for projects. However, we do submit a “Record of Coordination” [BDM 3.10.1] for projects that do not require DNR approval to document for local communities that our structures will comply with NFIP requirements.

The designer shall check the FEMA website to determine the current status of a community’s FIS. The Designer shall consider a Preliminary FIS to be effective for the purpose of project development, unless informed otherwise.

Projects located in communities that are mapped by the National Flood Insurance Program as flood prone but do not show the 100-year flood elevation are not subject to the same requirements as a project located in a detailed FIS area. If a community does not have an adopted floodway or established base (100 year) flood elevations, it may be possible to construct a structure smaller than the existing structure as long as the upstream damage potential is low. Sound engineering judgment should be used when downsizing an existing structure.

Manning’s Equation is used to determine normal depth and a stage-discharge relationship (rating curve) for analyzing bridges. Typical roughness coefficients for the equation are given in Table 3.2.2.3.

Table 3.2.2.3. Manning’s Roughness Coefficients for natural stream valleys (n-coefficients)

Description	Detailed Description	Manning’s Coefficient
Channel, small to medium drainage areas	Irregular section, meandering channel, rocky or rough bottom, medium to heavy growth on bank and side slopes	0.04-0.05
	Uniform section, relatively straight, smooth earthen bottom, medium to light growth on bank and side slopes	0.03-0.04
Channel, large drainage area	---	0.025-0.035
Overbank flood plain, pasture land	No brush or trees	0.05-0.07
	Light brush and trees	0.06-0.08
Overbank flood plain, crop land	---	0.07-0.09
Overbank flood plain, brush and trees	Heavy weeds, scattered brush	0.08-0.10
	Medium to dense brush and trees	0.09-0.12
	Dense brush and trees	0.10-0.15
	Heavy stand of timber, a few downed trees, little undergrowth	0.07-0.10

3.2.2.4 Freeboard

The purpose of freeboard is to provide adequate clearance for passage of debris and ice during high flows and to reduce the potential of superstructure submergence. Debris and ice jams can create horizontal and buoyant forces on the bridge superstructure and can reduce the bridge waterway opening resulting in increased velocity, scour, and upstream flood levels. When policy desired freeboards are not initially provided, the preliminary engineer should coordinate with Road Design regarding the roadway profile, preferably during concept development.

The bridge stage determination differs based on the type of hydraulic model and analysis selected for a site:

1. Iowa Bridge Backwater (IBB) Program
2. 1D model (eg. HEC-RAS)
3. 2D model (eg. TUFLOW, SRH-2D, HEC-RAS 2D)

For a 1D analysis and IBB, the stage for a given discharge is estimated using the proposed water surface elevation at the downstream bounding section at the first downstream cross section typically at the toe of the road embankment. This method is preferred, because it is thought to give a dependable and representative stage elevation at the bridge. A proposed bridge upstream bounding section in a 1D model has potential to vary due to the internal bridge calculations. For IBB, the downstream valley section stage is translated to the downstream bounding section location using a stream slope multiplied by channel distance adjustment.

When analysis is by 2D model, the proposed water surface elevations should be more accurate under and around the bridge. The hydraulic engineer shall review results and determine the representative stages to document in the Hydraulic Data Block and to utilize for scour calculations. Also, the engineer shall determine the appropriate stage to check freeboard and inundation at specific locations along the bridge.

If the operational freeboard for the 500-year event is less than 0 (no freeboard), consult the Unit Leader for guidance.

When hydraulic modeling predicts that a span in a pretensioned prestressed concrete beam (PPCB) bridge will be inundated by the 100-year or lesser floods, the designer should recommend that beams in the span be vented to prevent buoyancy forces. (See BDM 5.4.2.4.2 for beam vent details.) The designer also should recommend venting a steel superstructure with integral abutments that will be inundated from abutment to abutment by the 100-year or lesser floods [BDM 5.5.1.4.2].

For streams draining more than 100 square miles in rural (unincorporated) areas and for streams draining more than 2 square miles in urban (incorporated) areas, the Iowa DNR 50-year event operational freeboard is 3 ft. minimum, unless a licensed engineer provides certification that the bridge is designed to withstand the applicable effects of ice and the horizontal stream loads and uplift forces associated with the Q100. For streams draining less than 100 square miles in rural areas and streams draining less than 2 square miles in urban areas, no Iowa DNR permit is needed. In this case 3 ft. of 50-year event operational freeboard is still desirable to facilitate passage of debris and ice. In addition, for all bridges it is desirable that 500-year event channel freeboard is provided (>=0) to reduce potential for pressure flow conditions. Channel freeboard is critical for sites that do not have relief (roadway overtop and/or overflow bridges). For sites such as this, 500-year event channel freeboard should be considered a requirement, unless waived by the Unit Leader.

Table 3.2.2.4 Freeboard Policy Summary

Freeboard Type	Event (year)	Minimum Clearance	Comments
Operational - DNR Permit required	50	3’	Required, unless floodplain development permit notes (below) are included on the TS&L
Operational - DNR permit not required	50	3’	Preferred
Operational	100	>0’	Preferred. For less clearance, consult with Unit Leader. TS&L note regarding venting of beams may be required.
Operational	500	>0’	Preferred. For less clearance, consult with Unit Leader.
Channel	500	>=0’	Preferred. For less clearance, consult with Unit Leader. Clearance is critical for bridges that do not have overtopping or overflow relief.

Note: Consult the article for more complete information.

For situations where one or more of the following conditions are present, it may be acceptable to consider a design with a reduced freeboard:

- The bridge is a floodplain overflow structure,
- Ice or debris is not expected to be a problem,
- Road grade overflow readily provides relief in the event the bridge opening is obstructed,
- Raising an existing grade will result in excessive costs or damages, as in heavily developed urban areas,
- The proposed bridge provides channel freeboard (>=0) for the 500-year event, or
- The proposed bridge channel freeboard is increased as compared to the existing bridge to the extent feasible.

If a project requires a DNR permit and the Q50 operational freeboard is less than 3.0 feet, the preliminary designer shall add the following design note to the T,S&L:

Floodplain Development Permit Notes:
The bridge will be designed to withstand the applicable effects of ice and horizontal stream loads and uplift forces associated with the Q_{100}.

3.2.2.5 Road grade overflow

New primary road profile grades generally should be designed to ensure that the 100-year flood elevation including backwater is not greater than the outside edge of shoulder. However, the designer should recognize that if the road grade is much higher, road grade overflow will not serve as a relief valve for the bridge during an extreme flood.

Changes to existing primary road profile grades on bridge replacement projects also need careful consideration. The designer should ensure that raising profile grades in areas with a history of roadway overtopping does not have a negative impact to adjacent property owners.

Coordination of the road grades with the Design Bureau may be required.

There are situations when roadway overtopping can cause significant damage to the roadway embankment and pavement due to the duration of overtopping and the head differential across the

road. To mitigate damages due to roadway overtopping during floods, a Grid Tied Concrete Block Mat per DB RDD 570-20 or 570-22 should be used.

RDD 570-22 (Major Overtopping) should be used for overtopping events with long durations (greater than 12 hours) or when the head differential for a flood is greater than 1.5 feet. RDD 570-20 (Minor Overtopping) should be used for shorter duration overtopping events (less than 12 hours) or when the head differential across the roadway is less than 1.5 feet during the overtopping event. The difference between the two Standards is the anchor block detail to prevent the Mat separating from the existing pavement.

The Mat should also be used when significant damage has occurred to the embankment or pavement due to a flood especially if along an Interstate or high volume NHS route. The vulnerability of an asset and need for additional protective measures due to roadway overtopping should be evaluated economically and based on the critical usage of the highway.

3.2.2.6 Streambank protection

Streambank erosion is a natural process in which the stream adjusts to changing conditions within its channel and watershed. The main factors contributing to streambank erosion are the velocity of water, angle of attack, soil type, lack of vegetation, and changes in land use.

When stream velocities exceed 8 to 10 feet per second, riprap may be considered. Past aerial photos should be examined to determine an approximate rate of erosion.

There are many streambank stabilization practices used by the engineering profession. A detailed description of the different methods is beyond the scope of these guidelines. However, because 75% of the streambank failures are caused by toe scour, a common design practice for bank protection with riprap is to provide adequate protection at the toe of the bank: a minimum 6-foot from the toe or to the maximum scour elevation. The riprap should be a minimum 2-foot thick layer of Class E Revetment [IDOT SS 2507.03]. For situations where greater protection is recommended, a minimum 3-foot thick layer of Class C revetment may be considered. The bank slope generally should be 2 horizontal to 1 vertical. The designer should identify the limits of the riprap by station and offset on the TSL sheet.

As a general rule, any streambank protection design should not extend more than 25% of the width of the eroded channel, which includes the sandbar. The streambank protection design should be sufficiently keyed into the bank to prevent undercutting. For a bank toe protection example see the commentary for this article.

3.2.2.7 Scour

Scour calculations should be made for all new and replacement bridges. The most common cause of bridge failure is from floods scouring bed material from bridge piers and abutments. Bridge scour is the engineering term for the movement of soil caused by the erosive action of water. Bridge scour is a complex process and difficult to analyze but very important in terms of bridge safety and maintenance cost. For guidance on calculating bridge scour the Bureau generally relies on the Federal Highway Administration (FHWA) publication *HEC-18* *Evaluating Scour at Bridges, 5TH Edition* and the recommendations and guidelines published in “Iowa DOT Bridge Scour Guidelines.” See the commentary for this article.

The effects of scour should involve a multidisciplinary review of hydraulic, geotechnical, and structural engineers to assess the stability of a structure.

“Iowa DOT Bridge Scour Guidelines” is derived from *HEC-18*. The main difference between the FHWA publication and the Iowa DOT methodology is the way pier scour is calculated. For most cases pier scour in Iowa has been calculated using the research performed by Laursen under “Iowa Highway Research Board Bulletin No. 4, Scour Around Bridge Piers and Abutments.” *HEC-18* recommends the Colorado

State University (CSU) equation for calculating pier scour. The Laursen equations and the CSU method give comparable results.

3.2.2.7.1 Types

There are two types of bridge scour: general or contraction scour and local scour.

- General or contraction scour is the decrease in streambed elevation due to encroachment of the road embankment onto the flood plain causing a contraction of flood flows, and
- Local scour is the loss of material around piers, abutments, wing dikes, and embankments.

There are two conditions for contraction and local scour: clear water and live-bed.

- Clear water scour occurs when there is little to no movement of the bed material of the stream upstream of the crossing. Typical situations include most overflow bridges without a defined channel, coarse bed material streams that could be found in northeast Iowa, flat gradient streams during low flow, and bridges over main channels with a significant overbank length.
- Live-bed scour occurs when velocities are high enough to move the bed material upstream of the crossing. Most Iowa streams experience live-bed scour since they consist of sands and silts.

The designer should calculate the individual estimates of contraction, pier, and abutment scour. The designer should also consider long-term degradation when determining the total contraction scour depth. Local scour should be added below the contraction scour at each pier and abutment for evaluation. The designer should also apply engineering judgment when comparing results obtained from scour computations with available hydrologic and hydraulic data to achieve a reasonable and prudent design.

3.2.2.7.2 Design conditions

The design scour is determined for the 200-year or lesser flood, depending on which results in the most severe scour conditions. Usually, the overtopping flood results in the worst scour, so evaluate this discharge if it is less than the 200-year flood. This scour depth is used by the final designer to check pile capacity and stability using load factors for the strength limit state.

The check scour is based on the occurrence of a 500-year or lesser flood, depending on which results in the most severe scour conditions. Bridge foundations will be evaluated by the final designer to ensure that they will not fail at the extreme event limit state due to the check (maximum) scour.

The preliminary situation plan hydraulic data block shall show the design and check scour elevations.

3.2.2.7.3 Evaluating existing structures

When evaluating an existing bridge for scour, the designer should be aware of the procedures to evaluate the structure by engineering judgment to determine if it is scour-safe. A “Bridge Scour Stability Worksheet” and “Intermediate Scour Assessment Procedures” evaluation should be performed before proceeding with a calculated *HEC-18* scour analysis. This may significantly reduce the cost of analyzing structures for scour that could be considered scour-safe.

The “Bridge Scour Stability Worksheet” was developed in the early 1990s to assess structures based on the type of structure, observed conditions, and stream geomorphics. The structures were considered stable or scour-critical based on the point total determined from the worksheet.

The “Intermediate Scour Assessment Procedures” were developed in 1997 to provide additional assessment of existing structures that have not been evaluated for scour. A flowchart was developed to assess those bridges that could be considered scour-safe.

If the structure is not determined to be scour-safe after assessment by the “Bridge Scour Stability Worksheet” or the “Intermediate Scour Assessment Procedure,” a full computational analysis (*HEC-18*) must be performed.

3.2.2.7.4 Depth estimates

{Text for this article will be added in the future.}

3.2.2.7.5 Countermeasures

{Text for this article will be added in the future.}

3.2.2.7.5.1 Riprap at abutments

{Text for this article will be added in the future.}

3.2.2.7.5.2 Riprap at piers

{Text for this article will be added in the future.}

3.2.2.7.5.3 Wing dikes

The use of wing dikes (also called spur dikes or guide banks) shall be considered at any bridge site that has appreciable overbank discharge (25% or more of the total design Q in an overbank area). Wing dikes help minimize backwater and scour effects. See the commentary for a table on selecting appropriate lengths of wing dikes and the Design Bureau's manual [DB SRP EW-210] for construction details. The riprap should typically be extended through the end of the wing dike.

3.2.2.7.6 Coding

{Text for this article will be added in the future.}

3.2.2.8 Riverine Infrastructure Database

The Riverine Infrastructure Database (RIDB) is a database of Iowa Department of Transportation facilities in the riverine environment. The database consists of location data in addition to hydrologic and hydraulic data so impacts to facilities during a flood event can be rapidly evaluated.

A riverine location for this purpose is a stream crossing a waterway having a drainage area greater than 10 square miles. The RIDB determination should be made before work begins since additional hydraulic studies will generally be made as part of the concept development.

For more information, refer to the Riverine Infrastructure Database – Data Compilation and Data Guideline documents. These documents are available on the Iowa DOT website.

RIDB – Data Compilation
RIDB - Data Guidelines

For a bridge project concept requiring an RIDB dataset, the Bridge Bureau Concept Attachment shall include the RIDB site identification code. The site identification code is used for database indexing and consists of two parts, the stream ID and River Mile. Stream ID and River Mile shall be obtained through use of GIS mapping. Map information has been made available through the Iowa DOT ArcGIS Online web application (see link below). The Iowa DOT preliminary staff reviewer shall verify all consultant site identification locations during the concept review process. The RIDB site identification code shall be documented on the TSL in the Hydraulic Data Block.

It is good practice during Concept level development to inquire or check to see if an existing site has a completed RIDB dataset. If available, RIDB survey and portions of the dataset will be helpful to the engineer. However, an updated/finalized existing and proposed bridge dataset deliverable will still be required with the B1 RIDB submittal.

RIDB Stream WebApp

For project development, the RIDB dataset deliverables shall be placed in the project directory under the preliminary bridge RIDB subfolder. Upon dataset completion, Iowa DOT preliminary bridge staff shall place a text file within a "pending_PW" subfolder containing the engineer's name, completion date, and pathway or link to the completed dataset. The dataset information will be added to the GIS map and database by others.

3.2.2.9 Datum Correlation

All data utilized for project development shall be based on the project datum. The designer shall correlate all data sources to the project datum. Data source correlation information shall be documented in the Hydraulic Report and stored in the project directory.

Sources including USGS/COE flood studies and Flood Insurance Studies may be based on NGVD 29 datum. Past roadway/bridge projects were developed utilizing a variety of datums. LiDAR and other non-project datasets based on NAVD 88 datum will need to be verified and adjusted for systematic error (bias).

Guidance on datum correlation procedures can be reviewed under the Part 6 "Survey Requirements" of the Riverine Infrastructure Database – Data Guidelines.

3.2.2.10 Stream Stability

3.2.2.10.1 Hydraulic Grade Line and Streambed Profile Determination

The determination of design Hydraulic Grade Line (HGL) and design Streambed Profile (SP) are critical to the hydraulic design of structures. The design HGL is typically utilized to determine the stage-discharge relationship at the downstream boundary for the project hydraulic model and is the source for slope at the structure location which will be published on the TS&L. The design SP is utilized in calculating scour elevations and for publication on the TS&L longitudinal section as the Design streambed elevation. The SP (and low water offsets) are also typically used to "carve" out a channel within a LiDAR dataset for use in hydraulic modeling.

Following is the recommended procedure for SP determination utilizing LiDAR data. An SP derived from LiDAR data is recommended in that it may indicate a degrading channel, or slope changes within the hydraulic model reach, both of which can influence the structure design. Other procedures may be used, as long as the process accounts for existing local scour (bend, contraction, etc.) and stream degradation in determination of the design streambed elevation.

The Iowa statewide LiDAR datasets (circa 2008 and 2020) can be utilized for SP determination. Use of a LiDAR derived SP, as follows, can be considered as representing top of water, in general, at the time of the LiDAR flight. A profile of the LiDAR derived surface (ground returns) along approximate centerline channel is obtained. The profile will generally be jagged due to triangulation across the stream channel of ground returns. The LiDAR SP is derived by plotting a 'best fit' profile against the lowest points on this plot, as these represent the lowest ground returns in the dataset, and therefore approximate water surface at the time of the LiDAR data collection.

Once a LiDAR derived top water SP is established, the depth to design low water and thalweg from LiDAR SP can be estimated through consideration of project survey, aerial photography, and bridge maintenance reports. Low water and streambed elevations can be plotted against the LiDAR top water SP to estimate offsets to design SP (thalweg) and design low water.

For locations with limited data, an estimate of water level at riffle locations upstream and downstream of the structure, with offset to thalweg at the riffle, can be used to estimate design low water and streambed elevation at the structure. Bridge maintenance reports, aerial photography and site photos, in conjunction with interpretation of the LiDAR dataset, can be used to establish these elevations. The LiDAR top water SP can then be shifted to these elevations to establish design and low water SP's.

For culvert projects, this process can be utilized to determine appropriate design inlet and outlet streambed elevations. Buried culvert flowlines would be relative to the design streambed elevations.

Once the design SP has been determined per the above, the design HGL slope can be estimated.

For projects on small watersheds (culverts, small bridges) the preferred method for determining the HGL slope is to determine the slope from the LiDAR derived SP. For larger watersheds USGS Flood Profiles or detailed National Flood Insurance Program (NFIP) Flood Insurance Study (FIS) profiles, when available, can be utilized to determine the HGL slope. Use of these sources to estimate HGL slope is preferred, with the slope determined from these sources compared to the LiDAR derived SP to review for outliers in the flood profile data.

3.2.2.10.2 Grade Control Structures

Stream instability due to channel straightening, land use changes, more intense rainfall events, and erosive soils can result in the downcutting and associated widening of streams known as degradation. The unstable stream conditions make their way upstream, negatively impacting structures, utilities, farmland, and more. Damage from degradation at a bridge might include an increase in unsupported length for pile bents, unbalanced soil loading on piers, undermined pier footings, a widened channel (making the bridge too short) or steepened/unstable berm slopes. At a culvert outlet, the damage from degradation might include headwall settlement, joint separation, or undermining.

Western Iowa is particularly susceptible to channel instability and degradation due to the erodibility of loess soils. A local group called Hungry Canyon Alliance (HCA) was formed to research and implement solutions for western Iowa Counties with deep loess soils. Several publications have been made available covering topics such as how to identify the stages of channel degradation, and potential solutions for degraded sites. A good study reference for grade control structures (GCS) evaluating different types of solutions that have been constructed and what works is titled “Case Study 12: Grade Control Structures in Western Iowa Streams”, Part 654 National Engineering Handbook, August 2007, John T. Thomas, Hungry Canyons Alliance.

GCS have been found to be a cost-effective solution for the effects of stream instability and degradation. For small drainage basins, the solution may be culverts or pipes with drop inlets or flumes. For large drainage areas, the solution may be a sheet pile drop structure with energy dissipation.

A properly designed GCS will provide vertical channel stability in a controlled way. They may be considered for placement downstream of a highway structure to repair or reduce potential damage caused by degradation. Once installed, they will have the added benefit of keeping degradation from progressing further upstream. This reduces potential damage not only to the bridge but also to upstream structures, buried utilities, and property. Sediment should settle out upstream of the structure to raise the streambed to a design elevation.

All DOT new and replacement structure sites, as well as sites with unstable channels/bank erosion shall be evaluated for stream instability and degradation. The following process should be considered standard practice:

- Review of Bridge Maintenance Reports, for the subject site and downstream bridges, including local entity bridges (available online through SIIMS).
    - Stream profile sketches can provide a comparison between the channel streambed during recent inspections verses the original structure plan and historical streambed. Damage at piers or berms may be documented. The Engineer should be looking for a pattern or duration of channel lowering to help differentiate between channel degradation and post-flood scour.
    - Inspection photos can give an indication of channel bank sloughing up and downstream in the vicinity of the bridge, and site damage including undermined footings, unbalanced soil loading on piers, etc.

- A site visit and visual inspection should include review of the site for damage potentially caused by channel degradation. The engineer should document any indicators of degradation or stream instability, such as unvegetated and steepened channel banks that extend up or downstream beyond limits affected by bridge flood flow expansion/contraction.
- Review of high-resolution aerial photographs to determine channel condition upstream and downstream of the site. Indications of active or relatively recent degradation are unvegetated channel banks and changes in channel width within the reach. Review for installed channel control structures. The subject site may benefit from a recently constructed GCS downstream.
- If the above review indicates degradation may be an issue, a LiDAR channel profile extending a good distance up and primarily downstream of the site should be developed. If the site is located in a region identified by the HCA as having past degradation, standard practice at these bridge or culvert project sites would be to develop a LiDAR profile. Information provided by the profile will need to be documented and considered. The profile can be used to evaluate whether the stream is experiencing degradation. If degradation knick-point locations are identified, associated vertical depth of drop(s) moving up the channel can be determined.
- A review of flood plain permit requirements. Refer to the Iowa DNR web site for flood plain permit thresholds and criteria [IAC 567-71.11, 71.12, and 72.11. Also, potentially 71.9, 72.9 may be applicable if stream bank protection is involved].

When channel degradation is impacting or is identified as having a potential to impact DOT structures, a grade control structure should be considered. The most typical drop structure options utilized by the Iowa DOT are listed below.

In general, if the site is regulated under the Iowa DNR Flood Plain Regulations referenced above, accommodation of fish passage in the design will be required. The Location and Environment Bureau (LEB) will identify streams at culvert locations that are classified as Waters of the United States (WOTUS) and require fish passage at the W00 (Preliminary Wetland Review) event [BDM 4.4.11].

Drop Structure Options

1) RC Flumes downstream of a culvert. If fish passage is required, this is not possible. Report IDOT TR-750 may be a useful reference for this type of design.

2) Grouted rock flumes.

A typical GCS constructed for Iowa DOT would consist of a raised steel sheet pile weir/grouted rock flume. The structure would allow the stream elevation drop to occur in a controlled setting. Design guidance documents, such as the River Restoration Toolbox Practice Guide 1: Grade Control is available on the DNR website. If fish passage is required, a 15:1 or flatter weir slope is required. Iowa rock flume structures are typically designed with a maximum 4’ drop at a given structure (or up to half the bank full height).

The sheet pile at the crest of the flume is critical to prevent undermining as it acts as a seepage cut off. Containment of the revetment at the downstream extent of the GCS should be considered. This can be accomplished by a self-launching revetment toe of adequate volume, or a sheet pile cut-off wall of adequate depth, for estimated scour and future degradation.

When a revetment stilling basin is not provided, a sheet pile cut-off wall should be used. In this case bank stabilization downstream of the wall will need to be designed for scour and future degradation by providing a self-launching revetment of adequate volume, or a sheet pile containment wall, along the toe of bank revetment.

If a sheet pile cut-off is used, design scour and future degradation depth shall be provided on the TSL. The designer shall note on the TSL plan that “Sheet pile depth shall be determined in final design as a free-standing cantilever wall.”

3.2.2.11 State Water Trail and Paddling Routes

State Water Trails and Paddling Routes are recreational corridors and routes on rivers and lakes that provide a unique experience for canoeists and kayakers. The Iowa DNR provides information on these routes for recreational users including adequate access points. A Paddling Map identifying State Water Trails and Paddling Routes is available on the DNR web site. Projects that will obstruct a waterway identified on the DNR Paddling Map will be subject to requirements. The process for coordinating and implementing the requirements is summarized in the following paragraphs.

Project types listed may result in a potential obstruction to a Water Trail or Paddling Route, and will require coordination with DNR to determine project requirements. Waterway obstructions typically include temporary stream crossings (including temporary detour bridges) and causeways, equipment in the river such as platform barges, cofferdams, and significant amounts of debris such as might occur with a bridge removal or bridge deck replacement. Work types requiring coordination with the DNR are:

1. New structures
2. Replacement structures
3. Bridge widening
4. Superstructure replacement
5. Superstructure strengthening – when the waterway is obstructed
6. Deck replacements
7. Bridge removal
8. Bridge repairs – when the waterway is obstructed

Coordination with the Iowa DNR is initiated after the B0 or D0 Final Concept is complete, through use of the Iowa DNR Permit and Environmental Review Management Tool (PERMT), as an Environmental Review Request. Preliminary design unit staff will make the PERMT submittal and track status, regardless of project type. The Iowa DNR will respond with a Letter of Agreement, which shall be stored in the project Permits_Regulatory folder. Typical requirements listed in the Agreement will include notification to the DNR when signage is placed and removed, and minimum signage specifications and placement locations to make recreational users aware of the paddling route closures that will be in place for the duration of the project construction.

Project sign details, plan notes, and bid items associated with the requirements will be addressed by the Design Bureau and incorporated into the plan set.

The role of the Preliminary Bridge Designer will be:

1. Indicate that the State Water Trail and Paddling Route requirements will be applicable in the BSB Attachment for Concept Statement (see BDM C3.11 for an example).
2. Include a note to the Final Designer on the B01 TSL that states the requirements for a State Water Trail or Paddling Route are applicable, and that the signage, plan notes, and bid items shall be addressed by the Design Bureau and included in the Road Plans. The note is intended for designer information only and should be removed from the final bridge plan.

3.3 Highway crossings

3.3.1 Clearances

A grade separation design must satisfy both vertical clearance and horizontal clear zone requirements.

Vertical clearance distances at grade separation structures depend upon the mainline and side-road highway type and whether an interchange is present. Vertical clearance is measured from the low point of the overhead structure to the roadway, including the traffic lanes and shoulders. Minimum vertical clearance to be provided for a new or replacement bridge over primary highways is 16.5 feet and over non-primary highways is 15.0 feet [DB DM 1C-1]. For all primary over non-primary grade separations with an interchange, it is desirable to provide a clearance of 16.5 feet [DB DM 6B-2, 1C-1]. The specified minimum vertical clearances are inclusive of an allowance for possible 6-inch future overlay. The

minimum vertical clearance for the permanent condition and any interim condition, due to staging, shall be shown on the TS&L.

Horizontal clear zone distances depend on design speed, average daily traffic (ADT), horizontal curvature and roadside geometry; see the Preferred Clear Zone and Acceptable Clear Zone Tables in the Design Bureau's manual [DB DM 8A-2]. Any structure not meeting the preferred clear zone but meeting Design Bureau's acceptable clear zone will need Preliminary Unit Leader approval and documentation in the file.

Use values in the fill slope portion of the table (fs ≥ 6:1). The horizontal clear zone is measured either from the edge of the traveled way in rural sections or from the back of curb in urban sections. Do not determine the clear zone based on the edge of the pavement, as this is typically 2 feet wider than the traveled way. If multiple highway types (mainline, ramps, loops auxiliary lanes, etc.) are present, use the clear zone that governs. Clear zones apply to both the bridge pier and berm slope together when a side pier is proposed. However, clear zone does not apply to the berm slope alone when there will be no side pier and a recoverable berm is proposed.

A vertical clearance of 14.5 feet should be provided within the horizontal clear zone [DB DM 8A-2]. This vertical clear zone is to be maintained throughout the entire horizontal clear zone area.

3.3.2 Ditch drainage

If ditch drainage must be carried through the approach fills of a highway crossing structure, the designer should use a culvert rather than an open ditch, which increases the bridge length and cost. Ditch drainage may be conveyed behind the abutment due to excessive length and/or size of culvert.

3.4 Railroad crossings

The following articles are intended to provide guidance for obtaining agreements with the railroad for constructing within their right-of-way (ROW). Each project is unique and early coordination with the railroad regarding their design requirements and guidelines will help in the design process for grade separation structures. All Iowa DOT projects involving railroads should be coordinated at the concept stage through the Rail Transportation Bureau.

The design requirements and guidelines for grade separation structures over the Burlington Northern Santa-Fe (BNSF) Railway and Union Pacific Railroad (UP) may be different than other railroad crossings. Canadian National Railway (CN) and CPKC ~~Canadian Pacific Railway (CP)~~ have been requesting similar design standards to BNSF and UP. For preliminary bridge design of overhead structures, the guidelines are divided into two groups: BNSF, UP, CN and CPKC ownership, and Non-BNSF, UP, CN and CPKC ownership. The sections covering submittals and underpass structures will apply to all railroads.

The preliminary designer should be aware that federal funding will not include costs associated with improvements that increase the cost of the bridge above the limits specified in the Code of Federal Regulations (CFR 646). Considerations include the level of commitment for future track expansion, vertical and horizontal clearances, and berm placement location. In general, it is Iowa DOT policy to accommodate the railroad's requirements unless a significant cost will be incurred. For BNSF, UP, CN and CPKC, the designer should review all feasible options. Additional guidance for these Railroads is provided in article 3.4.1. In some cases, two bridge TS&Ls may be required to determine the limit of federal participation for a project.

3.4.1 BNSF, UP, CN, and CPKC overhead structures

The guidelines provided within this section are intended for overhead grade separation projects impacting the BNSF, UP, CN, and CPKC Railroads. The requirements and guidelines generally follow BNSF and UP Railroad guidelines, but are applied also to CN and CPKC Railroads and are written from an Iowa DOT project development perspective. For additional information and detail, the designer may refer to sections 1, 2, 3, 4 and 5 of BNSF-UP's *Guidelines for Railroad Grade Separation Projects* [BDM 3.1.5.2],

AREMA's *Manual for Railway Engineering* [BDM 3.1.5.2], and any applicable sections of the AASHTO LRFD Specifications.

3.4.1.1 Vertical clearance

The minimum vertical clearance from the top of rail elevation to low beam is 23'-4 (UPRR/CN/CPKC) and 23'-6 (BNSF). The BNSF and UP Railroads also require that the extent of the permanent vertical clearance shall be a minimum of 9 feet to the field side of the outer most existing or future tracks, measured perpendicular to the centerline of said tracks, and shall include all spaces between. Due to potential for future track expansion, the Railroad may require vertical clearance across their entire right-of-way. A wider envelope may be required for curved track situations. Additional vertical clearance may also be requested by the railroad for correction of a sag in the track, construction requirements, and future track raises. To assist the railroad in evaluating the site specific needs, the profile of the existing top-of-rail, measured 1000 feet each side of proposed overhead structure, shall be shown on the standard sheet [BSB SS 1067].

Federal funding limits may not allow for participation in the additional project costs associated with the desired 18 feet wide vertical clearance envelope and additional clearance for future track raises. However, it is Iowa DOT policy to accommodate the requested clearances unless a significant expense will be incurred. Iowa DOT requests for variance to these desired additional clearances should be limited to these cases.

3.4.1.2 Horizontal clearance

The BNSF, UP, CN and CPKC Railroads prefer all bridge berms, piers (including pier caps) and abutments to be located outside the railroad right-of-way. For a project concept, contact the Iowa DOT Rail Transportation Bureau for ROW information. If this is not feasible, all piers and abutments should be located to provide the widest feasible horizontal clearance. At a minimum the placements shall meet the requirements listed in BDM 3.4.2.

Where it is impractical to clear span the Railroad ROW, written justification and request for variance should be submitted through the Rail Transportation Bureau as part of the Concept coordination. The request shall describe the geometric, structural, and other constraints which make a clear-span alternative unfeasible and shall show that all options have been exhausted. A variance request should not be submitted for non-engineering reasons such as cost or time savings.

Note that pier placement at the right-of-way line may also require an associated shifting of the bridge berm. Since the berm location determines the bridge length, shifting the berm out to the right-of-way may result in a bridge exceeding the length and cost allowed for federal participation. The cost difference may need to be provided to FHWA to determine the appropriate level of funding.

3.4.1.3 Piers

Piers within 25 feet, measured perpendicular from centerline of existing or anticipated future track shall be of heavy construction as defined in the AREMA Manual for Railway Engineering. Generally, for new bridges the Bureau prefers the T-pier to satisfy heavy construction requirements in lieu of a pier protection wall. Top of pier footings located within 25 feet from centerline of track shall be a minimum of 6 feet below base of rail and a minimum 1 foot below the flow line of the ditch.

3.4.1.4 Bridge berms

When feasible, the bridge berm locations should be set beyond the Railroad ROW. It is recognized that this policy will in most cases exceed the federal policy and requirements summarized below.

FHWA has indicated that full funding participation applies when the location of a bridge berm with a 2.5:1 slope is set at the top of rail elevation 26 feet from centerline of the outermost track (27.5 feet for 3:1

berm slope). This FHWA method of setting the berm location provides for a small ditch sufficient for ballast to drain. Additional ditch drainage may require a culvert through the bridge berms to adequately convey the drainage. If a culvert is proposed, it must be analyzed to meet the BNSF and UP hydraulic design criteria summarized in the drainage section below.

Macadam stone slope protection should be proposed on the bridge berms. The railroad standard shows the slope protection terminating at the bottom of drainage ditch and must have a cut-off wall to protect the slope from scour/erosion. In all cases, the toe of slope shall be below the finished track or roadway sub-grade.

3.4.1.5 Drainage

Railroad corridors are constructed with a drainage system designed to keep runoff away from the tracks and ballast. The proposed construction shall safely pass high flows and not inhibit low flows. A complete hydrologic and hydraulic study is required whenever new or additional drainage is added to the railroad right of way, or when a drainage structure is scheduled to be added, removed, or replaced. The drainage report and support documentation must include hydraulic data (EGL, water surface elevations, and velocities) for both the existing and proposed conditions. If the proposed bridge structure will not change the quantity and characteristics of the flow in railroad ditches and drainage structures, the plan shall include a general note stating so.

The BNSF and UP Railroad standard provides for an open ditch under a bridge to convey drainage. For DOT projects, in most cases the existing railroad ditches will be spanned and used as constructed. In rare situations when the berm construction impacts the existing open ditch, use of a culvert or non-standard railroad ditch to convey drainage will need to be justified and a variance requested. In this case, the justification would need to demonstrate that the proposed design is in compliance with the railroad's hydraulic criteria.

3.4.1.6 Barrier rails and fencing

Early coordination with the railroad regarding recommendations for barrier rail and fencing is desired.

On sidewalk or trail facilities the top of the fence should be curved to discourage climbing. A minimum 8-foot vertical clearance should be provided for the full clear width of the trail or sidewalk. To prevent surface water from draining onto the railroad right of way, a one-foot parapet is required.

Fencing is also requested by the BNSF and UP on top of barrier rail on overhead structures without sidewalks or trails. Due to traffic safety concerns related to fencing on top of roadway barrier rail, the Iowa DOT generally proposes to the railroad that the fencing be omitted and that a 44-inch barrier rail be provided to control the amount of snow and debris falling onto the track. This proposal is subject to site specific review and variance by the railroad.

The 44-inch barrier rail and railroad fence requirements should be carried at a minimum to the limits of the railroad right-of-way or 25 feet beyond the centerline of track, future track or access road, whichever is greater. Barrier and fence may be reduced back to a more standard configuration on the bridge once the railroad minimum requirements have been met. For preliminary design purposes, the 44-inch barrier rail height should be carried through the bridge, as this will typically be the final design preference.

3.4.2 Non-BNSF, UP, CN and CPKC overhead structures

The guidelines provided within this section are intended for overhead grade separation projects impacting non-BNSF, UP, CN and CPKC Railroads. The requirements and guidelines for each railroad may be different, but generally follow AREMA's *Manual for Railway Engineering* [BDM 3.1.5.2] and any applicable sections of the AASHTO LRFD Specifications.

3.4.2.1 Vertical clearance

The preferred minimum vertical clearance from the top of rail elevation to low beam is 23'-4 directly above the rail.

3.4.2.2 Horizontal clearance

The need to accommodate future track and/or access road and the determination of applicable rail company guidelines for horizontal clearance must be coordinated with the Rail Transportation Bureau. These needs and requirements should be coordinated at the project concept stage, as they are a fundamental part of the bridge and roadway design development. Once the design criteria for track and access road elements have been determined, the designer will be able to proceed to the next step of establishing pier and berm locations.

It is desirable to provide pier (including pier caps) and abutment locations at least 25 feet measured perpendicular from the centerline of nearest existing or future track. In unique situations and subject to site conditions, the preferred minimum horizontal clearance shall be 18 feet measured perpendicular from the centerline of the track to the face of the pier protection wall. Horizontal clearance less than 18 feet may be allowed on a case-by-case basis, if approved by the railroad.

3.4.2.3 Piers

Piers within 25 feet, measured perpendicular from centerline of existing or anticipated future track shall be of heavy construction as defined in the AREMA Manual for Railway Engineering. Generally, for new bridges the Bureau prefers the T-pier to satisfy heavy construction requirements in lieu of a pier protection wall.

Top of pier footings shall be a minimum of one foot below finished ground line.

3.4.2.4 Bridge berms

It is the Iowa DOT policy to set the bridge berm location in accordance with the federal requirements. FHWA has indicated that full participation applies when the location of a bridge berm with a 2.5:1 slope is set at the top of rail elevation 26 feet from centerline of the outermost track (27.5 feet for 3:1 berm slope).

This method of setting the berm location provides for a small ditch sufficient for ballast to drain. Additional ditch drainage may require a culvert through the bridge to adequately convey the drainage.

Macadam stone slope protection should be proposed on the bridge berms.

3.4.2.5 Drainage

Railroad corridors are constructed with a drainage system designed to keep runoff away from the tracks and ballast. If drainage must be carried through the approach fills, this should be accomplished by using a culvert, not by using an open ditch which increases the bridge length and cost. If the proposed bridge structure will not change the quantity and characteristics of the flow in railroad ditches and drainage structures, the plan shall include a general note stating so.

3.4.2.6 Barrier rails and fencing

Early coordination with the railroad regarding recommendations for barrier rail and fencing is desired.

Most of the railroad bridges carrying vehicular traffic will make use of the Iowa standard single slope barrier rail. The designer shall determine the appropriate barrier rail height by consulting the Iowa DOT policy for bridge rail height. See BDM 5.8.1.1.1 and BDM 5.8.1.2.1. If a 44-inch height rail is proposed over the railroad right-of-way, the preliminary designer should show this rail height to be carried through the bridge, as this will typically be the final design preference.

Fencing shall be provided for the full length of bridge on all sidewalk or trail facilities. The standard 6-foot high chain link fence is generally proposed.

On a case by case basis, there may be an alternative to rail or fence proposed. Reasons may include a request by the railroad or project aesthetics. A statement shall be included with the TS&L submittal to the Iowa DOT Rail Transportation Bureau, relative to the proposal for barrier rail and fencing.

3.4.3 Underpass structures

Requirements for railroad underpass structures will follow the recommendations and guidelines applicable to the railroad company owner. Contact the Iowa DOT Rail Transportation Bureau for coordination of applicable standards at the concept level of project development. Early coordination is necessary, as some railroad structures (including BNSF and UP) will require additional vertical clearance as compared to highway grade separation structures.

Once the proper design guidelines have been identified, the preliminary bridge design effort may be initiated. Special attention should be given to minimize project impacts on the railroad company service. If new alignment is not feasible or if staging is not agreeable to the railroad company, a shoofly bridge may be considered. All options shall be closely coordinated with the Iowa DOT Rail Transportation Bureau.

3.4.4 Submittals

After TS&L completion, the Preliminary Bridge Unit Leader will make the following documentation available to the Iowa DOT Rail Transportation Bureau for submittal to the railroad:

(1) A response to railroad review comments on the concept submittal.
(2) A pdf file of the bridge TS&L.
(3) The site drainage report, if drainage is affected.
(4) A bridge plan view showing the location of the proposed shoofly (only for railroad underpass bridges).
(5) If the project will be constructed in stages, controlling dimensions should be included on the TS&L.
(6) For BNSF and UP RR submittals (See BDM C3.4.4).

3.5 Pedestrian and shared use path crossings

There are several pedestrian and shared use path crossing types. Guidance related to each type of crossing is provided in this article.

For a pedestrian and shared use path crossing on a highway structure or separate bridge, the cross slope is typically specified at 1.5%. The maximum cross slope specified shall be 2%, with placement of a TSL Design Note listing the rationale. See BDM 1.5 for more information.

The following references provide additional information related to the design of shared use paths and bicycle facilities: Iowa Bicycle and Pedestrian Long Range Plan [BDM 3.1.5.2]; AASHTO's *Guide for the Development of Bicycle Facilities (4th Edition, 2012)*[1] [BDM 3.1.5.2]; and *SUDAS Standard Specifications* [BDM 3.1.5.2].

The term "path" may be used in this article to represent a sidewalk or shared use path.

- **Pedestrian or shared use path on a highway structure**

  A preliminary determination will need to be made as to whether the sidewalk or shared use path on a bridge will be constructed at the roadway grade or raised above the roadway grade. Table 3.5 and the paragraphs below provide guidance to assist in the determination of path profile grade. The designer shall review the table as well as consider site specific factors that may

[1] Note that the 5th edition should be available soon.

govern site specific preferences. To assist in coordination with the Design Bureau, the determination should be noted on the TS&L.

Table 3.5 Desired sidewalk or shared use path elevation and surface water drainage

Bridge crossing type	Raised	At grade	Comments
Grade separation			
Urban approach section	x		Profile grade transition not needed. Surface water drainage (cross slope) not changed.
Rural approach section	x		Profile grade and surface water transitions are allowed within the rural approach section. Surface water drainage (cross slope) will change.
Stream/River crossing			
Urban approach section	x		Profile grade transition not needed. Surface water drainage (cross slope) not changed.
Rural approach section		x	Profile grade transition not needed. Surface water drainage (cross slope) not changed.

Note: Site specific factors may govern

Raised paths, which allow water to drain through slots in the separation barrier curb to the bridge gutterline, should be used on highway and railroad overpasses, and for stream crossings with an urban roadway approach section (curb and gutter). For rural stream crossings, use of an at grade sidewalk sloped toward the outer edge of slab allows the water to drain over the slab edge. At grade paths, which drain the water back towards the gutter line, are typically not used. The Bureau would like to avoid a condition that would require the exterior girder to be placed higher than the adjacent interior girder. In addition, in situations of excessive rainfall the paths may be temporarily flooded because of water from the roadway. Superelevated bridges may require special considerations. Check with the commentary or your unit leader in this case.

Regardless of the path type, the top of the slab where the chain link fence is attached shall be made level and drip grooves shall be used on the underside of the slab.

Coordination with the Design Bureau and District staff is necessary during preliminary design to verify the preferred condition. See the commentary for additional detail and factors to be considered when making a determination.

Additional guidance for sidewalk and shared use paths on roadway bridges is covered under [BDM 3.6.2.2 & 1.5], and Design Bureau's Design Manual [DB DM 12A and B].

- **Separate pedestrian or shared use path bridge**

  The following paragraphs do not apply to pedestrian or shared use paths on a highway structure. For a separate pedestrian or shared use bridge, the Bureau recommends a minimum clear width of 14 feet. This is different than our recommended 10-foot clear width on vehicular bridges due to the minimal increase in cost to provide 14 feet on a separate bridge.

  To assist in drainage and snow removal, the deck cross slope shall be in one direction across the full width. Concrete parapets at the base of the fence or railing may be proposed based on aesthetics and safety concerns. Parapets also protect the fence from being damaged by snowplow blades. Such parapets require a minimum footprint of 16 inches (plus 2-inch setback from slab edge) in order to accommodate the fence/railing anchorages. If no parapet is used, 12 inches is a sufficient fence/railing footprint on each side. The designer shall consult with the Methods Unit in the Bridges and Structures Bureau regarding usage of parapets.

For structures over a roadway, the desirable minimum vertical clearance is 17.50 feet. Provisions for additional clearance may be considered for unique bridges. It is undesirable to use truss bridges over our highways due to damage from over-height loads and the lack of proper fencing to prevent debris from falling/thrown onto the roadway below. A girder bridge with a concrete deck and proper fencing is preferred for recreational or trail bridges over a roadway.

For structures over a waterway, the structure low beam should generally be designed at the Q_{10} water surface elevation. Typically, relief in the approach grading should be provided for discharges greater than the Q_{10}. Since waterway structures will be inundated by larger floods, the designer should consider the expected buoyant forces. In general, the bridge approach fill within the floodplain should be designed close to the floodplain grade. This is especially true if the construction will be within a detailed FIS area.

- **Pedestrian or shared use path under a roadway bridge**

  Adjacent to an urban roadway section, the desirable horizontal clearance from back of curb to sidewalk or shared use path is 6 feet to allow for snow storage. If the offset from back of curb to shared use path is less than 5 feet, a separation barrier is required. Adjacent to a rural roadway section or at a river or stream crossing, the location and offset of the pedestrian or shared used path should be coordinated with Design Bureau. The desirable minimum vertical clearance is from bridge low superstructure to sidewalk or shared use path is 10 feet, with a minimum of 8 feet.

  For both crossing types above, a 2-foot shy distance is desired from sidewalk or shared use path to bridge berm, and a 3-foot horizontal clearance is desired from sidewalk or shared use path to pier column.

  Greater shy distance should be considered for slopes steeper than 3:1 sloping down or away. Railings or dense plantings may have to be considered alongside certain grade conditions or ground covering (such as rip rap).

- **Pedestrian or shared use path through roadway embankment**

  An RCB is typically utilized for this type of crossing. Please refer to BDM 4.5.16.

3.6 Superstructures

For typical highway bridge superstructures, the Bureau generally selects among the following: continuous concrete slab, prestressed concrete beams, or continuous welded girders. Information to assist in bridge superstructure type selection for both typical and unusual situations is provided in this article.

The Bureau has decided to discontinue use and maintenance of the signed beam bridge standards. Discontinued standards are no longer being considered for use on state projects.

- **Three-span standard continuous concrete slab (CCS), J40 and J44 series [BDM 3.6.1.1]:** These standard CCS bridges are used for short spans up to 59 feet or where minimum superstructure depth is required. There are nine bridge lengths from 70 feet to 150 feet. The series includes roadway widths of 40 and 44 feet and 0-, 15-, 30- and 45-degree skews. The bridges are designed for HL-93 loading under the AASHTO LRFD Specifications. The standard plans are available on the Bridges and Structures Bureau web site.

If site conditions prevent use of the standard CCS bridge, the Bureau prefers that the bridge be individually designed with either of the following.

- **Pretensioned prestressed concrete beam (PPCB) [BDM 3.6.1.2]:** PPCB bridges are used for spans to 155 feet. The designer shall select a single standard series of bulb tee beams for the

entire bridge. Within the series the designer should select among available beam lengths. For integral abutments the designer should limit skew to 45 degrees, and for stub abutments the designer should limit skew to 45 degrees.

- **Continuous welded plate girder (CWPG) [BDM 3.6.1.3]:** CWPG bridges are used for spans longer than 155 feet or where minimum superstructure depth is required or where the horizontal alignment is sharply curved. There are no standard girder cross sections or lengths; each CWPG bridge is designed for the specific site and project conditions. For integral and stub abutments the designer should limit skew to 45 degrees.

Grade separation design shall include the use of two-span bridges whenever practical as they minimize the use of piers, thereby increasing public safety. The designer shall consider various span arrangements based on the standard beam types available to optimize safety and cost efficiency. The face of pier and toe of berm slope shall be at or beyond the required clear zone distance for span arrangements with side piers. For the arrangements with no side piers, reference the article on berms [BDM 3.7.3] for additional guidance.

The guidelines listed above will cover most preliminary bridge designs. For exceptions and decisions regarding unusual project conditions the designer shall request approval from the supervising Unit Leader.

3.6.1 Type and span

3.6.1.1 CCS J-series

For relatively small stream and valley crossings the Bureau selects standard three-span continuous concrete slab superstructures. To facilitate the design of CCS bridges the Bureau has prepared the signed standard J-series of plans.

The plans have the following parameters.

- The structures are designed for HL-93 loading.
- Roadway width is 40 or 44 feet.
- Skews may be 0, 15, 30, or 45 degrees.
- Bridge lengths range from 70 to 150 feet as listed in Table 3.6.1.1.
- The maximum interior span of 59 feet is approximately the upper limit for slab bridge economy.
- The ratios between interior and end spans are approximately 1.3 for efficiency.
- Substructure plans cover integral abutments and the option of monolithic or non-monolithic pier caps.
- The open railing option is not intended for use on Iowa DOT highway bridges.

Table 3.6.1.1 Lengths, spans, and depths for J40 and J44 three-span continuous concrete slab bridges (This table is the same as Table 5.6.2.1.1.)

Length (1) feet	End Span (2) feet	Interior Span (3) feet	Depth inches
70	21.00	28.00	14.50
80	24.50	31.00	15.25
90	27.50	35.00	16.25
100	30.50	39.00	17.50
110	33.50	43.00	18.50
120	36.50	47.00	20.00
130	39.50	51.00	21.25
140	42.50	55.00	22.50
150	45.50	59.00	24.00

Table notes:

(1) Length is measured from centerline of abutment to centerline of abutment.
(2) End span is measured from center of abutment to center of pier.
(3) Interior span is measured from center of pier to center of pier.

3.6.1.2 PPCB

The majority of the bridges designed for Iowa highways make use of standard pretensioned prestressed concrete beams (PPCB). Presently there are four ~~eight~~ series of Bulb Tee beams listed in Table 3.6.1.2. ~~The A-D series beams are no longer being used for new and replacement projects.~~ The four Bulb Tee beam series allow for design of bridges with single spans or multiple spans with varying span lengths.

Various factors should be considered with the BTB through BTE series beams:

- High skews: The bulb tee beams are generally limited to use with bridge skews of 30 degrees or less. Use of the bulb tees with higher skews may require wider abutment and pier caps to accommodate the wide bottom flange of 30 inches. Bulb tee beams shall not be used for skews greater than 60 degrees. In some situations, a longer span may be available as an option to reduce the bridge skew. For bridges with skews greater than 30 degrees, the designer should consult with the supervising Unit Leader. If non-standard abutment or additional pier width is proposed, a note shall be included on the TSL.
- Estimated haunch limitations: When considering the use of bulb tee beams, consider the geometrics of the roadway. For long spans on roadways with sharp vertical curves, the longer bulb tee beams may not be feasible because of the large haunches necessary for vertical curves. The preliminary designer may estimate the haunch dimensions using the calculation method given in the commentary. In cases where the estimated haunch limitations are exceeded, the designer should consider the following approaches:
    - Coordinate with road design regarding flattening of the roadway profile grade vertical curve to reduce the beam haunch calculation.
    - Consult with the Final Design Project Development Engineer to determine a preferred approach:
        - The Final Design Project Development Engineer may review the anticipated haunch maximum and location (mid-span or end of span) and determine that the condition should result in an acceptable design. Maximum haunch at mid-span is generally of more concern due to flexural design capacity. Such a determination should be documented by a Designer Note on the TSL.
        - A final design solution such as special design of prestressed beams to adjust camber or reduction of beam spacing to minimize deflection. If special design consideration is the desired approach, a Designer Note shall be placed on the TSL.
        - A change to the span arrangement (for example the addition of a pier to reduce the span length, resulting in a reduced haunch)
        - Changing the bridge beam type to steel.

- Maximum offset on horizontal curve limitations: Sharp horizontal curves may limit the use of precast concrete beams. For more information, see [BDM 3.6.3]

For exceptions to the guidelines above and decisions regarding unusual project conditions the designer shall request approval from the supervising Unit Leader.

Table 3.6.1.2 Standard pretensioned prestressed concrete beams

Beam Type			
BTB (1)	BTC (1)	BTD (1)	BTE (1)
Beam Depth, feet-inches			
3-0(2)	3-9(2)	4-6(2)	5-3(2)
Span Length, Centerline to Centerline of Bearing, feet-inches			
30-0	30-0		
35-0	35-0		
40-0	40-0		
45-0	45-0		
50-0	50-0	50-0	
55-0	55-0	55-0	
60-0	60-0	60-0	60-0
65-0	65-0	65-0	65-0
70-0	70-0	70-0	70-0
75-0	75-0	75-0	75-0
80-0	80-0	80-0	80-0
85-0	85-0	85-0	85-0
90-0	90-0	90-0	90-0
95-0	95-0	95-0	95-0
100-0(3)	100-0	100-0	100-0
105-0(3)	105-0	105-0	105-0
	110-0	110-0	110-0
	115-0	115-0	115-0
	120-0(3)	120-0	120-0
		125-0	125-0
		130-0	130-0
		135-0	135-0
			140-0
			145-0
			150-0
			155-0(3)

Table notes:

(1) The normal distance from centerline of bulb tee bearing to centerline of pier is 12 inches. Exceptions require approval of the supervising Unit Leader.

(2) Add beam, 8.5-inch deck, and 2-inch estimated haunch depth to determine superstructure depth. ~~Recently released standards utilize an 8.5-inch deck.~~

(3) May need an additional beam line. (see standard cross section sheets)

Standard cross sections for PPCB bridges have roadway widths of 30, 40, and 44 feet [BSB SS 4556-BTC-4 to 4561-BTE-6, 4380-BTB-4 to 4385-BTE-6].

3.6.1.3 CWPG [AASHTO-LRFD 2.5.2.6.3]

Continuous welded plate girder (CWPG) bridges are used for spans longer than 155 feet or where minimum superstructure depth is required or where the horizontal alignment is sharply curved. The approximate maximum economical span is 300 feet for constant depth girders and about 550 feet for

haunch girders. The Bureau has standard CWPG bridge cross sections but custom designs the girder cross sections for each project.

Because of continuity, span lengths generally are balanced to avoid uplift and other undesirable conditions. To avoid uplift at the abutment and significant imbalance the Bureau prefers that an end span be a minimum of 60% of the length of the adjacent interior span. For balanced moments the end span should be in the range of 75 to 80% of the length of the adjacent interior span. As a maximum, the Bureau prefers that the end span not exceed 80% of the adjacent interior span.

Unless the bridge site presents vertical clearance or profile grade issues, the goal is to set composite girder depths (slab + girder) at about 1/25 of the span. If it is necessary to use shallower girders, the Bureau prefers that the designer consider the AASHTO LRFD span-to-depth ratios to be minimum [see BDM 5.5.1.4.1.12, BDM C3.6.1.7, and AASHTO-LRFD 2.5.2.6.3]. CWPG superstructures typically have four or five girders spaced at 8.25 feet to 10.25 feet. Spacings to 12 feet are considered on a case-by-case basis. Usually interior and exterior girders are designed to be the same.

For exceptions to the guidelines above and decisions regarding unusual project conditions the designer shall request approval from the supervising Unit Leader.

3.6.1.4 Cable/Arch/Truss

Span lengths or other unusual project conditions may dictate a cable, arch or truss bridge type. Use of an unusual bridge type shall require approval from the supervising Unit leader.

Bridges utilizing cables, arch members or truss members that are not redundant shall consider Zone of Intrusion [BDM 3.14] to lessen the likelihood of contact from vehicle impact.

3.6.2 Width

3.6.2.1 Highway

Guidelines for bridge widths for new and reconstructed highways and for county roads are given in two chapters of the Design Bureau's Design Manual [DB DM 1C-1, 6B]. However, to allow for maintenance a minimum 40-foot width should be proposed for state highway bridges with two-way traffic. See also bridge width needs for bridge inspection and maintenance accessibility [BDM 3.6.7].

For new bridges carrying freeways, expressways, super-two highways, rural two-lane highways, transitional facilities, and ramps and loops, the recommended bridge width is the lane widths plus shoulder widths. A minimum 40-foot width is desired for two-lane rural and transitional highway facilities. For new bridges carrying reduced-speed urban facilities and for existing bridges carrying all types of highways the recommended bridge width may be different than the approach roadway width [DB DM 1C-1]. A desirable bridge width for an urban roadway (45 mph or less) is the lane plus shoulder widths (curbed or uncurbed) or the design lane width plus 3-foot offset on each side (curbed), whichever is greater. On single lane flyover ramp bridges, a 32-foot width should be considered (in lieu of a 26-foot wide ramp bridge) to facilitate future deck maintenance and improve horizontal sight distance.

For bridges carrying county roads in interchanges, the width should be set as for non-National Highway System (NHS), rural two-lane highways [DB DM 6B-2, 1C-1].

For bridges carrying county roads not in interchanges, the minimum width should be 30 feet for an average daily traffic (ADT) of 1500 or less and 40 feet for an ADT greater than 1500 [DB DM 6B-3]. The 30-foot minimum width provides for wide farm machinery. For county roads, in all cases the designer shall discuss the proposed width with the county engineer.

For bridge widths greater than 120 feet, the designer should consider that a 2-inch gap may be needed to reduce temperature forces.

For interstate projects with paved medians, the bridge width may be greater than the lane widths plus shoulder width. AASHTO's *A Policy on Design Standards--Interstate System, 5th Edition* [BDM 3.1.5.2] states that the width of all bridges, including grade separation structures, measured between rails, parapets, or barriers shall equal the full paved width of the approach roadways. Special considerations are listed below.

- **A single median roadway barrier rail**

  It is usually desirable to provide a 2-inch gap between bridge decks and a 6-inch gap between back of bridge barrier rail. If the median portion of the bridges will be used for temporary traffic staging and the barrier rail will be installed in a later stage, it will be desirable to construct a slotted drain between the bridges to provide drainage in the area of staged traffic.

- **A separated median roadway barrier rail**

  The barrier rail on the bridges will normally align with the approach roadway barrier rail, with the deck slab extending the typical 2 inches. To retain the approach fill and median roadway pavement, the abutments should maintain the 2-inch gap. To accommodate staged traffic in the median portion, the bridge decks should follow the temporary traffic staging guideline in the paragraph above.

- **Bridges where a light pole blister or sign truss are proposed in the median between the bridges.**

  For urban corridor projects, contact the Traffic and Safety Bureau to coordinate signing and lighting needs. In some cases, the proposed light poles or signs can be relocated beyond the bridges or shifted to the outside.

  When light poles or sign trusses cannot be relocated, these structures are preferred to be mounted behind the barrier rail with an offset beyond the minimum zone of intrusion [BDM 3.14].

  If the need for sign or light pole structures is anticipated at the preliminary design stage, the designer should review the available clearance between the bridges to check that sufficient clear width is available. It should be noted that in a median installation the loss of shoulder to accommodate light poles, signs or sign trusses is undesirable. Exceptions will be allowed based on consultation with the Design Bureau and the Chief Structural Engineer.

3.6.2.2 Sidewalk, shared use path, and bicycle lane

This article addresses sidewalks, shared use paths and bicycle lanes on highway structures. Refer to article BDM 3.5 for superstructure width requirements in other situations.

A sidewalk or path is generally proposed on an urban structure that will have an approach sidewalk or path, or on any structure when the Iowa DOT District determines that they are needed. For more detailed information on facility inclusion on a structure and Iowa DOT cost sharing thresholds, refer to the Iowa DOT's "Complete Street Policy" Iowa Bicycle and Pedestrian Plan, Chapter 6, Sections 2.3 and 2.4. The preliminary designer may be asked to assist in the policy coordination by providing facility estimated cost information.

~~Because sidewalks on highway structures are costly, the Bureau generally includes sidewalks only on urban structures or where a local agency agrees to pay the cost [DB DM Chapter12A].~~ The sidewalk minimum clear width is 5 feet. Wider sidewalks may be considered on the basis of approach sidewalks. When a sidewalk is proposed on a bridge, the designer should review BDM 3.5 to determine whether to design raised sidewalks or sidewalks at grade.

To accommodate shared use paths on highway structures, the Bureau normally provides a 10-foot width. ~~follows the width guidelines in the Design Bureau's Design Manual [DB DM Chapter 12B]. A separated path on a bridge should normally be 10 feet wide.~~ This path width does not require a design exception even though it is narrower than the width recommended by AASHTO's *Guide for the Development of Bicycle Facilities* [BDM 3.1.5.2]. If especially heavy use is anticipated, a 12- or 14-foot wide path should be considered.

In determining width for sidewalk or separated shared use path, consideration should be given to bridge inspection and maintenance (See [BDM 3.6.7]). If there is good access underneath the bridge, a high lift can be used from below. However, special consideration should be given to bridges with limited access underneath or very high structures. For these cases, some additional guidance is listed below:

- To provide access for a typical bridge layout, a snooper on the bridge can reach over a 5-foot wide sidewalk.
- To provide access for a steel welded girder bridge, a system of catwalks or cables on the girders may be considered. The girders need to be more than 6 feet deep so the inspectors can stand up straight.
- To provide access for a very limited subset of bridges, such as tied arches or deck trusses, the designer should first coordinate with the Bureau's maintenance and inspection unit staff before setting sidewalk or path dimensions. In some cases, sidewalk or path widths greater than 5 feet should be increased to 12 feet to allow for snooper access.

For both paths and sidewalks, the width should be labeled as clear width on the TS&L. This is to ensure that rail attached to the back side of the separation barrier does not encroach on the needed design width.

Although less common on roadway structures, designated bike lanes without barrier separation from traffic may also need accommodation. To provide for a bicycle lane adjacent to a driving lane on a bridge, the bicycle lane width should be 5 feet wide, as measured from barrier rail to bicycle lane stripe at edge of driving lane.

3.6.3 Horizontal curve

If a bridge is to be placed along a horizontally curved alignment, the designer will need to decide how to configure the superstructure. For relatively insignificant curves, a superstructure may be constructed with straight beams or girders between locations of support, but for significant curves the beams or girders will need to be curved. With straight beams or girders, the Bureau prefers that all substructure units be skewed at the same angle so that all members within a span are the same length. The decision to require horizontally curved members generally limits the superstructure type and increases both final design and construction cost, so the designer needs to make the decision carefully.

The designer shall note the terminology "bridge chord" and "span chord." Bridge chord is defined as the straight line between intersection points of the centerline roadway (or alignment baseline) at the centerline of bridge abutments. Span chord is defined as the straight line between intersection points of the centerline roadway (or alignment baseline) at the centerline of each substructure unit.

The Bureau has the following policy for horizontal curves. First, the designer shall determine the distance between the bridge chord and arc, defined here as M, at the midpoint of the bridge, and the offset between the span chord and the arc, defined here as S. Tables 3.6.3-1 through 3.6.3-3 provide policy guidance for preferred bridge layouts based on the bridge chord and span chord offsets. Site conditions may dictate a different approach. Contact the Unit Leader for special cases or unique circumstances that are not covered below.

Table 3.6.3-1 Pretensioned, Prestressed Concrete Beam (PPCB) Bridge

	M < 1’	M > 1’, S < 9”	M > 1’, S > 9”
Deck	Straight with proposed gutterlines parallel to the bridge chord.	Curved	(2)
Deck Width	Increase width to provide full shoulder at all locations. (1)	Width per design guidelines.	(2)
Substructure Units	Consistent skew to the bridge chord.	Consistent skew to the bridge chord.	(2)
Beams	Parallel to the bridge chord.	Parallel to the span chords.	(2)

(1) End to end of bridge wings. See paragraphs below.
(2) Consider a curved steel beam bridge. Consult with the Unit supervisor before proceeding with a PPCB bridge.

Table 3.6.3-2 Continuous Concrete Slab (CCS) Bridge

	M < 1’	M > 1’
Deck	Straight with proposed gutterlines parallel to the bridge chord.	(2)
Deck Width	Increase width to provide full shoulder at all locations. (1)	(2)
Substructure Units	Consistent skew to the bridge chord.	(2)
Span Length (1-foot transverse width of slab)	Parallel to the bridge chord.	(2)

(1) End to end of bridge wings. See paragraphs below.
(2) This geometry typically doesn’t occur for slab bridges due to the short bridge lengths.

Table 3.6.3-3 Steel Girder Bridge

	M < 1’	M > 1’
Deck	Straight with proposed gutterlines parallel to the bridge chord.	Curved.
Deck Width	Increase width to provide full shoulder width at all locations. (1)	Width per design guidelines.
Substructure Units	Consistent skew to the bridge chord, so that beams will be the same length	Radial. A consistent skew to the bridge chord may be preferred for a bridge over side road crossing.
Beams	Straight – parallel to the bridge chord	Concentric beam lines.

(1) End to end of bridge wings. See paragraphs below.

For straight bridge decks built on a curved roadway, the bridge roadway width will typically increase by 1’ (M plus the additional width to round the bridge roadway width up to the nearest whole foot). Extra width due to whole foot rounding may be distributed equally on each side of the bridge or placed asymmetrically to avoid barrier rail shoulder encroachment. The TS&L shall define the distribution of the bridge roadway width right and left.

For bridges with standard wing end sections (no wing extension), the bridge width shall be set to avoid barrier rail encroachment. For bridges with wing extensions, a curved or kinked wing may be needed. The TS&L shall contain a note defining the wing alignment, if different from the alignment on the bridge.

For straight bridge decks with normal crown, the top of crown should follow the bridge chord. For straight bridge decks with normal crown or superelevated conditions, the grade calculated along the curvilinear alignment shall be shifted radially to the bridge chord. Bridge deck cross slopes shall be calculated using elevations along the bridge chord and cross slopes relative (perpendicular) to the bridge chord. The piers should be dimensioned to the bridge chord location at centerline pier, with station and offset provided from centerline roadway (or baseline). An example layout for a straight bridge based on the chord is shown in Figure 3.6.3-1.

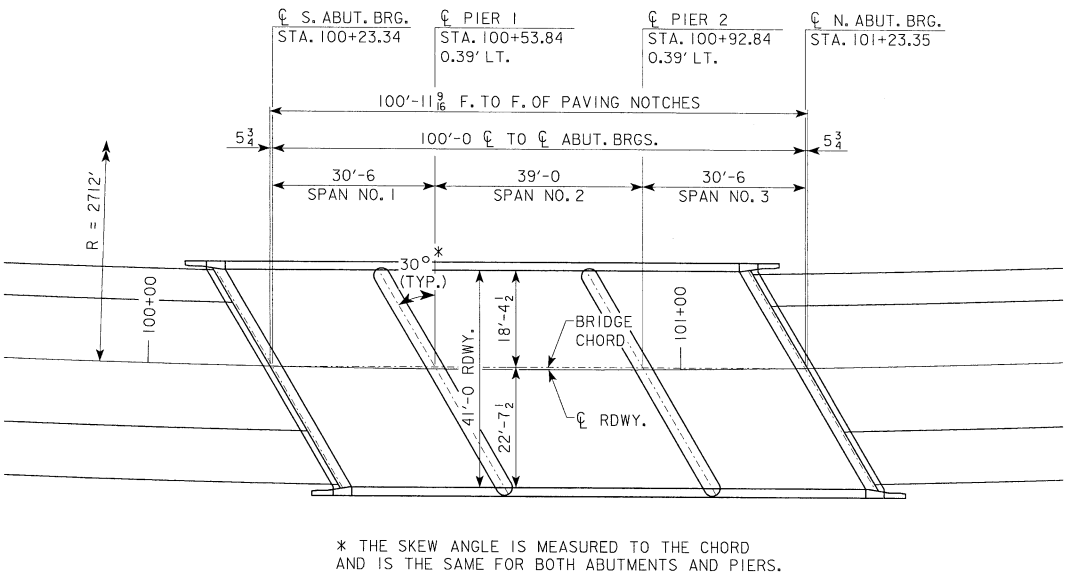

Figure 3.6.3.-1 Stationing layout for a straight bridge based on the chord

For curved bridge decks, the bridge deck grades will be calculated based on the roadway profile grade along the curvilinear alignment and radial cross slopes. The designer shall label bridge stationing from the centerline of the approach roadway (or baseline alignment). The stationing should be referenced from the design alignment as shown in Figure 3.6.3-2.

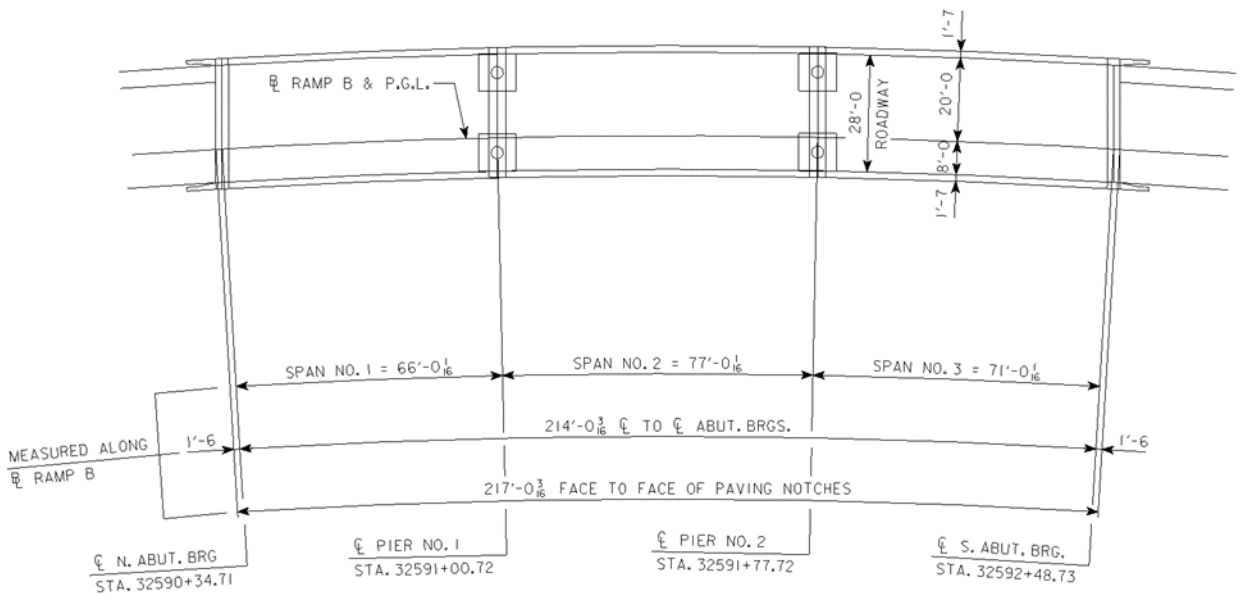

Figure 3.6.3.-2 Horizontally curved bridge stationing layout

3.6.3.1 Spiral curve

The use of spiral curves in roadways in Iowa is an accepted practice to improve alignment and safety. In order to minimize the effects of complicated roadway geometry in bridges, spiral curves will either be moved off the bridge or eliminated from use [DB DM 2C-1] in order to simplify design and construction.

3.6.4 Alignment and profile grade

It is preferable that the horizontal alignment for a bridge be straight. Final design software usually can expedite the final design for a straight bridge. Where a curve in the alignment affects only part of a bridge, the designer should consult with the Design Bureau to adjust the horizontal alignment to move the curve off the bridge, if possible.

It is preferable that the vertical alignment not create a flat, difficult-to-drain location on the bridge. If a low point is located on the bridge, the designer should consult with the Design Bureau to adjust the vertical alignment to move the low point off the bridge [DB DM 2B-1].

When the difference between the horizontal length and the profile grade length for any span within a PPCB bridge is greater than ½ inch the following applies. Bridge stationing shall be measured along the horizontal from centerline to centerline of bearings (vertical), but individual spans and bridge length are to be measured along the grade from the centerline to centerline of bearings (normal to grade based on standard beam lengths) as indicated in the figure below:

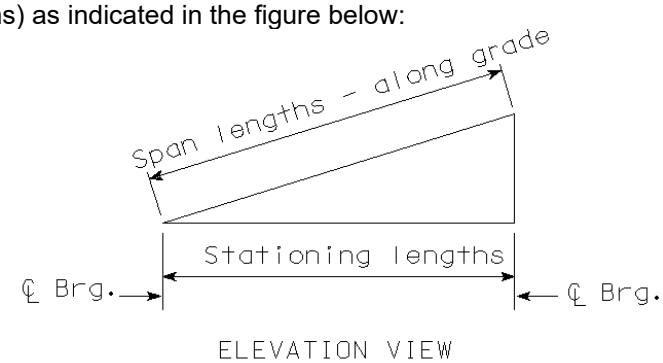

The preliminary situation plan should dimension the horizontal lengths of the bridge, centerline to centerline of abutment bearings and centerline to centerline of spans, and the corresponding stations. The plan should also include the dimension lengths from centerline to centerline of abutment bearings and face to face of paving notches for the lengths along the profile grade. Label these lengths “Horizontal” and “Along Grade”. All other applicable plan lengths should be labeled accordingly. Although the span lengths based on profile grade will be known approximately during preliminary design, the final designer may need to adjust the lengths slightly depending on camber.

For a two-span overpass in an urban location, a convex vertical alignment may cause excessive haunch above pretensioned prestressed concrete beams (PPCBs). The designer should be aware of the potential difficulty and consult with the Design Bureau, if necessary.

A minimum grade of 0.5% for bridge replacement projects is the preferred design criteria [DB DM 1C-1]. However, a grade of 0.3% with roadway curb and 0.0% without roadway curb is the acceptable design criteria.

When developing plans for bridges on four lane divided highways:

- Do not use the term “Centerline of Bridge Roadway” in the plans.
- Show the “Profile Grade Line” on the Situation Plan.
- Stations on the “Situation Plan” view should be shown at the “Centerline of Approach Roadway”. The elevations shown in the “Longitudinal Section Along Centerline of Approach Roadway” should coincide with the stations shown in the “Situation Plan” view.

For all bridges shown in longitudinal section, show top of bridge deck elevation taking parabolic crown into account (see commentary for this article).

3.6.5 Bridge Deck Cross Slopes

In most cases, bridge deck cross slopes are desired to match roadway lane cross slopes and bridge shoulder cross slopes are desired to match adjacent lanes. A “Typical Bridge Section” detail shall be included on the TSL to differentiate the intended bridge deck cross slopes, as compared to the “Typical Approach Section” detail shown to the left of the Situation Plan.

3.6.6 Deck drainage

If a bridge contains an area that is flat or difficult to drain, a revision to the profile grade or cross slope may be desired. In cross slope transition areas, the preliminary designer shall check the slope gradients on the bridge. Each gradient is the vector sum of the cross slope and the grade. If the slope gradient is less than 2%, a revision to the profile grade or cross slope is desired. If a grade or cross slope cannot be revised to obtain a 2% gradient, the preliminary designer shall work with the roadway designer and the Unit Leader to find an acceptable solution.

Bridge deck drain locations are determined in final design [BDM 5.8.4].

3.6.7 Bridge inspection/maintenance accessibility

For bridges with limited access underneath or with very high structures, inspections are normally performed from the roadway above requiring the use of a snooper. The maximum reach under a bridge with a snooper arm is 45 feet based on a zero-degree skew. Inspection access may also be obtained from a pedestrian/recreational pathway. See the article on Sidewalk, separated path, and bicycle lane [BDM 3.6.2.2]. The designer should coordinate with BSB Bridge Maintenance and Inspection to determine maintenance needs.

Dual bridges, 45 feet or wider, may require access from both the outside and median side. The desired median clear width to provide snooper access is 7 feet. If the maintenance needs for separation will result in a shift of the roadway alignment or barrier rail, the designer should coordinate with the Design Bureau.

When access from above is not practical for steel girder bridges, the following options will need to be considered.

- Inspection walkways
- Safety cables attached to girder webs

Other considerations for steel girder bridges:

- Weathering steel may require periodic washing.
- Painting of the exterior fascia in the median is recommended.

3.6.8 Railings [AASHTO-LRFD 13.7.2]

Test Levels (TL) and the associated heights for railings on interstate and primary road bridges is as follows:

- The need for a TL-6 railing is not anticipated for the vast majority of bridges in Iowa.
- All interstate mainline bridges shall require a TL-5 railing, minimum height 44 inches, 42 inches plus 2 inches for future overlay.
- Bridge railing test level and the associated height for other primary highways shall be evaluated by the Pre-Design Unit in the Design Bureau for replacement structures and the Preliminary Bridge Unit in the Bridges and Structures Bureau for other bridges. Basically, the evaluation will follow the flow chart in the commentary [BDM C3.6.8] and additional information in the policy statement.
- TL-2 and TL-3 barrier railings may also be used in low speed applications with favorable roadway characteristics.

The preliminary designer should note on the TS&L when TL-5 or another special rail is proposed.

Normally the preliminary designer is not involved in bridge rehabilitation projects. However, if the preliminary designer is involved with retrofit barrier rails on deck replacement, superstructure replacement, or widening projects on interstate or primary highway systems the designer shall consult with the Methods Engineer. There may be special circumstances that require exceptions to the flow chart in the commentary [BDM C3.6.8].

The J40 and J44 standard bridge options have alternatives for an open barrier rail. The open rail option is not intended for use on Iowa DOT highway bridges.

3.6.8.1 Barrier Rail End Treatments

Bureau standard sheets detail the blunt end either with or without guardrail attachment details for typical conditions [BDM 5.8.1.1.1]. The barrier rail end section is a vertical end post section type, which if left unprotected could be impacted head-on by an errant vehicle. The approach end of all bridge rail end sections located within the clear zone shall require end treatment. For bridges on high-speed roadways, steel beam guardrail is the preferred treatment. However, crash cushions may be used where site conditions cannot accommodate steel beam guardrail. Sloped end transition (SET) end section type (BA-108 or other) for low-speed highways is required in the approach pavement. For bridges in urban areas, posted speed and roadway characteristics determines which type of treatment should be used [DB DM 8A-4]:

- If the posted speed is 35 mph or greater, use guardrail or a crash cushion.
- If the posted speed is 30 mph or less, use of guardrail or crash cushion is preferred. If constraints don’t allow for placement of either of these options, a sloped concrete end treatment may be used.
- End treatment type will be determined by the Design Bureau.

In cases where the bridge is near an intersection, sight distance may not be adequate. The designer should consult with the Design Bureau at the field exam if the barrier rail may restrict sight distance near intersections. In some cases, the bridge geometry and barrier choice may be impacted, and therefore the

sight distance adequacy shall be determined before the B1. Evaluation of appropriate sight distance is a Design Bureau responsibility.

3.6.8.2 Separation Rail

When a bridge provides for pedestrian and/or bicycle traffic in addition to vehicular traffic, the designer shall provide appropriate separation between the different streams of traffic. Although a barrier curb may be used for traffic speeds of 45 mph or less [AASHTO-LRFD C13.7.1.1], the Bureau has the policy of providing a separation railing for all but unusual circumstances.

Separator type will usually be determined during preliminary design. The selection will generally be based on roadway posted speed, though there are other factors that may affect barrier selection for a project (e.g. aesthetic special railings, local preferences, or roadway characteristics). Iowa DOT standard practice is to use combination traffic and pedestrian railings that are also bicycle height compliant, since some bicycle traffic can be expected to occur on sidewalks that are not trail width compliant. A barrier and rail selection shall be carried through the full length of the bridge at a minimum. The preliminary designer should refer to BDM 5.8.1.2.4 for more detailed information and dimensions. If a separator type or footprint width changes after B1 completion, final design shall make any necessary adjustments.

The most common separator options meeting the Iowa DOT's MASH implementation policy for use on Iowa bridge projects are listed below:

- **IBBR (Iowa Barrier with Bicycle Railing) TL-2 Separation Barrier**
    - Restricted to roadways with posted speeds of 30 MPH or less, and it is the preferred separator type for those conditions due to its greater transparency and potential for reducing or eliminating sight distance conflicts, especially in urban areas.
    - Footprint width 10 inches to 1'-0. For preliminary design, 1'-0 should be assumed. The rail is mounted on the top without encroachment on the front (vehicle) or back side.
    - Raised sidewalk allowed (6 inches at back side of barrier)
- **BMBR (Back-Mounted Bicycle Railing) TL-2 Separation Barrier**
    - Restricted to roadways with posted speeds of 45 MPH or less. At posted speeds of 35 MPH and higher, a guardrail end connection or crash cushion is required (DB DM 8A-4) unless space restrictions prevent it. The BMBR may be used in place of the IBBR for lower posted speeds if desired for aesthetic reasons or to meet local municipality expectations or preferences. Check the application for sight distance conflicts before substituting the BMBR for the IBBR and contact the Methods Engineer for guidance.
    - Raised sidewalk allowed (6 inches at back side of barrier)
    - Footprint width is 1'-4. The footprint width includes sufficient space for the rail to be mounted on the back side.
    - May be used without its bicycle railing attachment for the traffic-only side(s) of bridges or as a sidewalk separation barrier with review and approval by the Methods Engineer.
- **Mod B-25 Series TL-3/TL-4 Separation Barrier**
    - Typically reserved for high-speed roadway bridges that include a trail or path. Bridges carrying roadways with posted speeds greater than 45 MPH must use this design unless there are mitigating circumstances. Contact the Methods Engineer for guidance on possible alternate solutions.
    - Raised sidewalk or trail not allowed. Consider using an at grade sidewalk or trail on the bridge and warp the trail profile and connection past the ends of the bridge wings.
    - May be used in a vehicular traffic-only condition when used on both sides of a bridge that has a sidewalk or trail only along one side. Omit the back-mounted bicycle railing attachment for vehicular traffic-only applications.
    - Footprint width is 1'-0. The rail is top mounted with no encroachment on the vehicle or back sides.
    - Requires guardrail or crash cushion termination in accordance with DB DM 8A-4.

Figure 3.6.8.2-1

Note: For more detail and dimensions, refer to BDM 5.8.1.2.4

3.6.9 Staging

For some bridge replacement projects, staged construction is desired in order to maintain traffic. It is the preliminary designer's responsibility to assure that the staging plan is workable. Staging refinement and details will be determined during final design; however, issues affecting the bridge type, size, location or profile are best resolved during preliminary design.

Staged construction of CCS and beam bridges generally may be considered. However, for CCS bridges due to Stage 1 falsework remaining in place until all stages are complete, there may be potential for temporary debris pile up or flooding related issues.~~construction difficulties on CCS bridges,~~ Unit Leader approval is required when CCS bridge staging will occur over more than one construction season. In all cases, the designer should consult with the Design Bureau to coordinate the bridge staging options and needed traffic widths.

Stainless-steel reinforcing bars will be used transversely for all new deck construction joints. To accommodate deck construction for staged ~~beam~~ bridges, a ~~4'~~ 3' preferred gap width should be provided between the Stage 1 existing deck removal cut~~-~~ line and the proposed Stage 1 constructed deck. The intent is to provide sufficient space for Stage 1 construction deck reinforcing bar extensions needed for lap lengths.

If the preferred gap width cannot be obtained with the proposed bridge width, coordinate with Bridge Methods and the Preliminary Design Unit Leader to select an acceptable option. Options may include one or a combination of the following:

- ~~Propose using stainless steel reinforcing bars (SSR) (minimum 3' gap)~~
- Widen the proposed bridge deck (generally widen to accommodate the preferred ~~4'~~ 3' gap width)
- Propose using mechanical couplers (1.5' preferred, 1' minimum gap. A 16-inch wider gap may be needed if sheet pile is anticipated at the ends of the bridge.)

If a PPCB or steel bridge has only two beams supporting staged traffic, the capacity of the existing structure must be evaluated to ensure that it will carry all legal loads. This should be evaluated and documented before finalizing the concept. Rating of the existing bridge shall be based on the requirements in BDM 12.1.7. Existing slab bridges that are stage removed do not require review for legal loads.

Placing of the TBR during staged construction should be planned carefully with respect to the existing superstructure at each stage. Bureau policy is to place the TBR along the centerline of an existing beam wherever possible. If the TBR must be placed on a deck cantilever, the designer shall consult with the supervising Unit Leader and shall follow the guideline below.

- Place the TBR on the deck cantilever, limiting the placement so that the traffic side of the barrier face is a maximum of one foot from the centerline of the stage exterior beam. Also, provide a minimum of 6-inch clearance from the outside edge of the TBR to the edge of the deck. The maximum temporary deck cantilever length should be approximately 3.50 feet from centerline of the stage exterior beam.

Tie-downs are required for TBR near drop-offs. For severe dropoffs such as the edge of a bridge deck, tie-downs are required when the backside of the TBR to deck edge is less than 3.75 feet. With a Type B tie down strap the backside of the TBR may be as close as 6 inches to the edge of a bridge deck [DB DM 9B-9]. See the commentary for example concept staging sketches.

In addition to the superstructure issues listed above, substructure issues should also be considered by the preliminary designer. If an existing frame pier cannot be removed in stages due to stability, a sufficient profile is preferred such that there will be a vertical clearance of 1’ between the existing top of pier and the bottom of the new low beam. However, there may be times when partial removal of the existing pier cap may be allowed to facilitate placement of the new beams provided approval from the Unit Leader is obtained. The clearance allows sufficient space for the existing pier to be removed in its entirety once the traffic is placed on new construction.

3.7 Substructures

3.7.1 Skew

For horizontally straight bridges, skew is measured from centerline of roadway. For horizontally curved bridges, skew may be measured from centerline of roadway, a chord, or a tangent. Generally, if the abutments and piers for a curved bridge will be radial it is convenient to measure the skew from the centerline of roadway, and if the abutments and piers will be parallel it is convenient to measure the skew from a chord or tangent. The method for determining skew on curved bridges should be noted on the TS&L.

Except in unusual cases the Bureau limits skew to a maximum of 45 degrees. The Bureau prefers to use integral abutments, and the 45-degree maximum skew will allow use of integral abutments for most bridges. A skew larger than 45 degrees requires approval of the supervising Unit Leader. A highly skewed superstructure may require special final design, and the superstructure may require extra maintenance during its service life.

If the bridge will require stub abutments the Bureau prefers that the skew not exceed 30 degrees. Except in unusual cases, the Bureau limits the skew to a maximum of 45 degrees.

The skew for a straight bridge should be the same for all substructure components. If all substructure components have the same skew, beams or girders in the superstructure will be the same length, which will promote ease of fabrication and economy. The designer should seek approval of the supervising Unit Leader if skews of substructure components will vary.

The Bureau prefers that the designer set the skew to the nearest whole degree. The designer then should list this rounded skew in the title block for the TS&L but label the actual intersecting angle between the two roads on the plan view. However, if the new grade separation structure is adjacent to an existing structure that will remain in use, if horizontal clearance is limited, if a pier needs to fit a median barrier, or if the bridge is wide, the designer may set the superstructure to the appropriate exact skew angle rather than a rounded angle.

3.7.2 Abutments

Because of lower construction and maintenance costs the Bureau prefers integral abutments as shown on standard sheets and standard plans for bridges. Integral abutments are limited by bridge length, end span length, and soil or rock conditions at abutment sites. For most sites, downdrag due to compressible fills will not affect the use of integral abutments because only the top portions of the piles flex, and the downdrag stresses occur below these regions of high bending stresses.

The conditions and table below are summarized from the detailed information in the abutment section of Bridge Design Manual, and that section should be consulted for additional information [BDM 6.5.1.1.1]. Table 3.7.2 assumes that a bridge has approximately parallel abutments and piers and that a bridge is straight or horizontally curved with straight beams or girders. The Bureau generally does not use integral abutments for bridges with horizontally curved girders.

Table 3.7.2. Bridge length limits for use of integral abutments

Superstructure Type / Typical Pile	Length and Skew Limits for Standard Integral Abutments (3)	Maximum End Span / Prebore Length (2) / Minimum Pile Length
PPCB / HP 10x57	575 feet at 0-degree skew to 425 feet at 45-degree skew (1)	Maximum A-D and BTB-BTE length / 10 or 15 feet depending on load / 15 feet to bedrock [BDM Table 6.5.1.1.1-1]
CWPG / HP 10x57	400 feet at 0-degree skew to 300 feet at 45-degree skew (1)	120 to 150 feet / 10 or 15 feet depending on load / 15 feet to bedrock [BDM Table 6.5.1.1.1-2]
CCS / HP 10x42	400 feet at 0-degree skew to 300 feet at 45-degree skew (1)	45.5 feet / 10 feet / 15 feet to bedrock

Table notes:

(1) Use linear interpolation of length for intermediate skew.

(2) Prebore depth is related to axial structural resistance of the pile. Final designer may adjust the depth. The preliminary designer shall show a 10-foot deep by 16-inch wide prebore on the TSL for integral abutments on bridge lengths greater than 130'.

(3) The bridge length limits assume the thermal origin of the bridge is at the center of the bridge. The final designer will need to determine if integral abutments can be used if the thermal origin is not at the center of the bridge per the table notes in BDM 6.5.1.1.1.

If a working integral abutment is feasible at only one end of a bridge, the maximum length limit for the bridge shall be one-half the limit in the table, with no change in maximum end span length. In cases where a MSE retaining wall is used near an integral abutment, each pile shall be sleeved with a corrugated metal pipe (CMP) to control compaction near the pile as the embankment and MSE wall are built. Because the limits in Table 3.7.2 are more liberal than past limits, exceptions to these guidelines are not encouraged.

For relatively long, significantly curved, highly skewed, and other bridges that do not meet the integral abutment guidelines in Table 3.7.2, the designer should consider stub abutments. For many bridge and bridge site conditions stub abutments as detailed on standard sheets will be feasible. However, the designer will need to consider modifications to standard abutments and alternate abutment types for highly unusual bridges and bridge sites.

To estimate the bottom footing elevations for continuous concrete slab bridges, the designer should review the applicable standard sheets. To estimate the bottom footing elevation for beam bridges, the designer should first determine the deck elevation at the low side exterior beam centerline. From the top of deck subtract superstructure depth (deck/haunch/beam), estimated bearing height (3-inch integral/6-inch stub), and low step to bottom footing height (3.5 feet integral/4'-1 stub). The estimated bottom footing elevation will be level, except as noted below.

For integral abutments it is desirable to slope the abutment footing and top of berm when the difference in elevation from the centerline of exterior beams is greater than 1.5 feet.

For stub abutments it is typically desirable to keep the bottom of footing level and adjust the beam seats.

For the usual bridge deck profile or a moderately super-elevated deck profile the bottom of the stub abutment footing should be horizontal but, if the difference in bearing seat elevations is greater than 2.5 feet, the designer should consider sloping the bottom of the footing.

3.7.3 Berms

3.7.3.1 Slope

A bridge berm slope is generally normal to the bridge abutment, but also may be normal to a roadway or railroad under the bridge. Under normal situations the designer may make the following initial assumptions for berm slopes:

- For fill heights less than 30 feet from grade to toe of berm, the steepest berm slope may be taken as 2.5:1, horizontal to vertical.
- For fill heights from 30-40 feet, the steepest berm slope may be taken as 3:1.
- For fill heights greater than 40 feet, contact the Soils Design Unit for an initial berm slope estimate.

However, the designer shall also consider the following special situations:

- For bridges located over streams and rivers in the western Iowa Loess Hills counties (Woodbury, Monona, Harrison, Pottawattamie, Mills, and Fremont), and for bridges situated in meandered stream and river alluvial sites/environments statewide (See list in C3.10.1.), the designer should use a 3:1 berm slope with fill heights less than 30 feet unless a steeper slope has previously been reviewed by the Soils Design Unit. Note that bridges located over roads in upland Loess Hills areas are exempt from this shallower slope.
- For fill heights greater than 30 feet on either Iowa Loess Hills stream and river sites or meandered stream and river alluvial sites statewide (See list in C3.10.1.), the designer shall contact the Soils Design Unit for an initial slope estimate.
- For bridges statewide located in areas with special, unusual, extremely variable, and/or questionable soil conditions, the designer shall contact the Soils Design Unit for an initial slope estimate.

If steeper slopes are required, they may be accommodated by reinforced steepened slope (RSS) techniques, by lightweight fill techniques, and/or by soil remediation techniques such as intermediate foundation improvements (IFIs) or core-outs, but steeper slopes require full coordination with and design by the Soils Design Unit.

The initial assumptions for berm slopes discussed above are used to develop a preliminary Type, Size, and Location (TS&L) plan for a bridge. When final soils analysis shows that an alternate berm slope is required, either shallower or steeper, revisions to the TS&L may be required at that time.

The designer shall check the berm slope at all potential critical points along the berm. This will ensure that the required berm slope is provided anywhere on the berm.

Objects such as bridge piers and bridge berms can create a sight obstruction on the inside curve of a highway. Minimum sight distance is required based on curve radius, design speed, etc., measured along the centerline of the inside lane around the curve [DB DM 6D-1]. Bridge piers located at clear zones typically do not cause an obstruction. Bridge berms located at the edge of the shoulder and within or close to a horizontal curve need to be checked by the Design Bureau to verify that the berm is not causing an obstruction. These bridges may need to be lengthened to accommodate sight distance.

3.7.3.2 Toe offset

To improve snow removal operations and storage and reduce maintenance costs for roadway grade-separation structures with no side piers, it is desirable to design the finished grade of the berm toe 5 feet from the edge of shoulder. A minimum of 4 feet offset is acceptable for PPCB bridges if sufficient beam length remains to obtain the 4-foot minimum from the edge of shoulder to the toe. Use the next beam increment for that span if the minimum offset cannot be obtained. For CWPG bridges, set the toe of berm at the 5-foot offset location. For standard design bridges, ensure that minimum toe offsets are obtained.

3.7.3.3 Berm slope location table

The berm slope location table (BSLT) provides key points on the bridge berm to define the grading surface. This information is used by the Design Bureau to calculate earthwork quantities and by the road contractor to assist in constructing the bridge berms. A BSLT shall be placed on the TS&L for all new bridges, or when a bridge is replaced or widened.

See the Design Bureau's Standard Road Plans for earthwork [DB SRP EW 201-204] as these standards work with the BSLT. The grading surface represents the top of slope protection for grade separation structures. For river crossings, riprap may be placed on top of the grading surface or embedded below when needed to increase the bridge opening area. A typical section riprap detail identifying the grading surface must be included on the TSL sheet to clearly show the intent. Refer to the commentary for additional guidance related to typical berm situations and example design details.

Points A, B, D and W are the key points used to describe the grading surface. All points are defined by their elevation, station and offset (as referenced from the centerline of construction survey or survey baseline). The points are located a distance of 3 feet from the outside edge of the bridge deck or wing. W is defined as the grading surface at the end of wing. To determine the elevation at W, drop 0.15 feet from the edge of shoulder elevation. B is at the top of berm and A at the toe of berm. The Point B, top of berm elevation, should be set at an elevation 2' above the estimated bottom abutment footing elevation. Sometimes additional A or B points are needed to better define the berm, especially for bridges with skews greater than 15 degrees.

For dual bridges with complex or non-uniform berms, the addition of D points may be desired. The intent of the D points is to define a single grading control line for both bridges at a constant elevation. See commentary for examples.

Potential differences between preliminary design BSLT estimates and final calculated values are a normal part of the design process and should be addressed during final design. The intent is to avoid re-involving preliminary design to update a BSLT or berm terrain model.

The letters A, B, C, D and W are reserved for the bridge berm grading. If additional points are desired to better define the grading needed, use a different lettering scheme.

For roadway grade separation structures with no side piers, A points are defined where the finished grade of the berm meets the edge of the shoulder plus offset [DB SRP EW-203 and EW-204, BDM 3.7.3.2]. For roadway grade separation structures with side piers, A points are usually defined at the clear zone [DB SRP EW-211]. The designer can determine the elevations of A points from existing or proposed grade information for the roadway under the bridge and cross slopes of the pavement and shoulder. For a bridge over a stream, railroad, or urban roadway A points are defined where the toe of the berm meets the existing ground or proposed ground surface.

3.7.3.4 Recoverable berm location table

A recoverable berm location table (RBLT) provides bridge baseline station/offset and elevations for the various points to provide sufficient information for the contractor to construct the recoverable berm [DB SRP EW 203 & EW-204]. A recoverable berm is constructed for bridge berms with no outside piers and provides a flattened slope for errant vehicles. When the toe of the bridge berm is not located within the clear zone, an RBLT is not required.

The recoverable berm is represented by points B, C1, C2, and C3, as shown on the standard construction details sheet [DB SRP EW 203 & EW-204]. Point B is located 3 feet from the outside edge of the bridge deck at the top of the bridge berm. In order to create the flattened area for the recoverable berm, a line must be established that is 15 degrees or less from the edge of the lane (traveled way) to point B. This will establish the line segment BC from point B to point C2, which should be at a 6:1 horizontal to vertical or flatter slope. If the slope is greater than 6:1, the angle from the lane to point B must be lowered to graphically determine the limits of the recoverable berm.

The line segment BC intersects the edge of the shoulder at point C3. The elevation of point C3 is the edge of the shoulder elevation at that location. Point C2 is on line BC and is located a distance equal to twice the shoulder width from the edge of the traveled way. Continuation of the shoulder slope to point C2 determines the elevation.

The station distance between point C2 and C3 is defined as “X”. A station distance “X” toward the bridge should be applied to determine the location of point C1. Point C1 should be 5 feet from the edge of the shoulder unless otherwise noted on the TS&L, minimum of 4 feet. See the standard road plan for bridge berms with no outside piers for more information [DB SRP EW 203 & EW-204, BDM 3.7.3.2]. The elevation of point C1 is based on a continuation of the shoulder slope to that location. Point C1 is established to provide a transition from the recoverable berm back to the normal toe of the bridge berm. See the example RBLT in the commentary for this article.

Potential differences between preliminary design RBLT estimates and final calculated values are a normal part of the design process and should be addressed during final design. The intent is to avoid re-involving preliminary design to update an RBLT or berm terrain model.

3.7.3.5 Slope protection

This article covers slope protection guidelines for all except railroad bridges [BDM 3.4.1.4, 3.4.2.4].

- **Bridges over roadway**

  For bridges over a roadway, macadam slope protection is typically used. Concrete slope protection should be shown on berms adjacent to path or sidewalk facilities. Exceptions to this include proposing slope protection to conform to project aesthetic guidelines.

- **Bridges over waterway**

  For bridges over a waterway it is recommended that riprap be placed on the bridge berms due to limited maintenance resources and the potential for significant abutment scour. See also the article for riprap at abutments [BDM 3.2.2.7.5.1, to be added in the future].

  In most cases, specify riprap to a minimum 50-year flood elevation with erosion stone extending from the riprap to the front face of the abutment. When the top of berm is significantly higher than the 50-year flood elevation, it is recommended that erosion stone be placed from the top of riprap to the top of berm to protect the berm slope from deck drains and local erosion/scour.
  The exception is when designing riprap for a bridge with a pressure flow condition. A pressure flow condition for the purpose of determining type of slope protection is defined below. For the pressure flow condition, extend riprap placement to the front face of the abutment.

  1. The 100-year water surface exceeds the low beam at the abutment creating a pressure flow situation.
  2. Bridges behind levee systems, where levee failure could create a pressure flow condition.

For projects that require a sovereign lands permit, a broken concrete substitute for riprap will not be allowed. The prelim designer should place a note on the TSL directing the final designer to include this restriction in the revetment bid item reference notes.

3.7.3.6 Grading control points

If channel shaping, benches, wing dikes, or other special grading is required, the designer shall provide the grading intent in a proposed grading surface terrain. Key grading control point stations, offsets and elevations may be included on the TS&L labeled as “G” points. A typical stream crossing example showing proposed channel grading is shown in the commentary. The purpose of the proposed grading surface terrain and grading control is to communicate channel or special grading needs to the Design Bureau, which will assist them in the preparation of the grading plans.

Generally, channel grading control would be shown in one of two ways:

- By centerline stream – provide the alignment, profile, typical cross section and begin/end locations
- By toe of channel – provide a series of grading control points along each side of channel at the toe of slope

3.7.3.7 Mechanically Stabilized Earth (MSE) Walls adjacent to abutments

The Bureau discourages the use of MSE walls in lieu of sloped berms to shorten a bridge. However, the Bureau accepts the use of MSE walls in lieu of sloped berms as part of a solution to avoid ROW impacts or to address unique site conditions. If an MSE wall solution is proposed, the preliminary designer shall coordinate with the Design Bureau (DB) and the Bridge Bureau aesthetics coordinator relative to structure geometry, MSE wall alignment and aesthetic accommodations.

MSE walls may be proposed for the approach roadway and terminate at the back face of abutment footing/diaphragm or at the end of a bridge wing extension/wing. MSE walls may also continue past the abutment and along the edge of bridge fore slope to terminate at the toe of the berm, or they may wrap around the bridge abutment from the front to the sides. The “W” points in the BSLT table are not required for corners of the bridge with proposed roadway approach MSE walls.

Considerations for Integral Abutments:

For MSE walls along the front face of an integral abutment, the centerline abutment bearing shall be placed at least 4.5 feet from the front face of an MSE wall.

Considerations for Stub Abutments:

The centerline of the piling shall be a minimum of three feet from the face of the MSE wall at the bottom of the MSE wall. The front row of piles shall be battered unless the batter increases the bridge length by more than five feet due to the interference with the MSE wall. The preliminary designer should consult final design before proposing a stub abutment with 6:1 or vertical piling.

Considerations for MSE Wall/Abutment Systems:

- If an MSE wall/abutment system is located outside of the clear zone and the abutment is supported on deep foundations such as piling or drilled shafts, redirection/absorption or design consideration of the collision load will not be required.
- If an MSE wall/abutment system is located within the clear zone or if the abutment is outside of the clear zone but is not supported on a deep foundation, redirection/absorption or design consideration of the collision load may be required. The preliminary designer shall coordinate with the Project Development Engineer to determine project requirements.
- MSE Wall location should consider zone of intrusion [BDM 3.14].

3.7.4 Piers and pier footings [AASHTO-LRFD-2020 3.6.5]

For typical bridges the Bureau selects among four pier types: frame pier, T-pier (hammerhead pier), pile bent, and diaphragm pier. Pier selection criteria include the following:

- **Waterway conditions:** For stream or river crossings, the most significant considerations in choice of pier type are the potential for ice or driftwood flow and anticipated depth to bedrock. If the drainage area is small, 50 square miles or less, pile bents usually are acceptable for spans up to 100 feet. ~~Consideration shall be given to the unbraced length of pile bent piers with respect to scour.~~

  Superstructure spans exceeding 100 feet could require excessive number of piles and pile bent piers may not be economical. For longer spans the designer should consider T-piers [6.6.1.1.2], and in certain situations a frame pier may be considered.

  Regardless of drainage area, however, if significant ice or driftwood flow is expected, the pile bent shall be fully encased [BDM 6.6.1.1.3]. For hydraulic analysis, preliminary designers should assume a fully encased or individually encased width of no less than 30-inches.

  If the drainage area is large, more than 50 square miles, or there is potential for significant ice or driftwood flow, the Bureau strongly recommends T-piers.

  If the preliminary designer calls out for fully encased pile bent piers when significant ice or driftwood flow is not expected, add the following note to the TSL:

  > "Debris and ice are not a concern at this site. The final designer may consider the use of individually encased pile bents rather than fully encased pile bents. Check with the BSB Preliminary Design Unit Leader before proceeding."

  Further, if the preliminary designer shows individually encased pile bents, the final designer may consider the use of fully encased pile bents to improve constructability when the pile spacing is small (as determined by the final designer).

  When pile bent piers are being considered, with either individually or fully encased piles, the preliminary designer shall ensure that the unbraced height (H) does not exceed the maximum allowable. H is defined on Standard Sheet P10L (within BSB bridge Miscellaneous Standards) as the bottom of concrete pier cap to the design scour elevation.

  Preliminary design will typically show the pile bent pier with steel H-piles, as this is the commonly used type. For more detailed information on pile bents with steel H-piles, refer to BDM 6.6.4.2.1.1. Monolithic caps are typically preferred for Continuous Concrete Slab bridges, and non-monolithic caps are used for beam bridges.

  When H exceeds 26 feet for non-monolithic caps or 29 feet for monolithic caps, the Bureau recommends that the preliminary design shall indicate use of T-Piers.

  Since the thalweg of channels can migrate within a bridge opening, all piers, whether in the channel or in the overbank, should be designed for scour. The Bureau requires the designer to set the bottom of the footing about 6 feet below the streambed elevation for all channel and overbank piers within a stream or river crossing, regardless of the calculated scour elevations.

  In cases where it can be determined with a reasonable degree of certainty over the life of the bridge that the overbanks will remain stable and the main channel will not migrate toward the overbank piers, the Bureau may allow exceptions to the overbank pier design with the Preliminary Bridge Design Unit Supervisor approval.

For situations with anticipated bedrock 30 feet or less below the streambed elevation, the preliminary designer should assume drilled shafts are possible for the foundations. Early coordination with final design will be required to obtain a conservative estimate of drilled shaft size and associated pier width. The estimated drilled shaft pier diameter shall be considered in the proposed bridge hydraulic modeling.

Roadway conditions: For grade separations the most economical choice usually is frame piers. The preferred clear zone width should be provided for the location of piers [DB DM 8A-2].

For bridge widths up to 30 feet the T,S&L should show a T-pier, because a 2-column frame pier is not redundant when collision is a consideration. A designer note should be placed on the TSL stating that the pier type may be changed in final design. For bridge widths greater than 30 feet that would typically warrant three or more columns with a pier cap, the T,S&L should show a minimum column diameter of 4.0 feet for determining horizontal clearance [BDM 6.6.4.1]. For situations with anticipated bedrock 30 feet or less below the grading surface, the preliminary designer should assume drilled shafts are possible for the foundations. If drilled shafts at the piers are possible at the site, the preliminary designer may need to coordinate with final design for potential shaft and column diameters to be assumed. Final bridge design may change the bridge pier type after considering aesthetics, maintenance, depth to bedrock, and cost.

Abutments and piers located within the acceptable clear zone shall be investigated for collision [AASHTO-LRFD-2020 3.6.5]. Collision shall be addressed by either providing structural resistance or by redirecting or absorbing the collision load. An exemption to collision force resistance may be granted by the Project Development Engineer for low traffic speeds.

The final designer will confirm the appropriate method for addressing vehicular collision force requirements. However, the Preliminary Designer shall consider the following situations, and place an appropriate note to the Final Designer on the TSL.

- Iowa DOT policy is to exempt design for vehicle collision force when the annual frequency of bridge collapse (AF_{BC}) is less than the AASHTO thresholds. The AF_{BC} calculations and resulting design accommodations shall be determined in bridge final design.

- In urban areas with low traffic speeds, the Bridge Project Development Engineer may grant an exemption to collision force investigation on a case-by-case basis. Consideration shall be given to the traffic control devices present along the route.

- In most cases, providing structural resistance in the pier is thought to be a better and more economical option than providing redirection or absorption. Where the design choice is to redirect or absorb the collision load for new or retrofit construction, protection shall consist of a minimum 42-inch high MASH crash tested rigid TL-5 barrier located such that the top edge of the traffic face of the barrier is 3.25 ft or more from the face of the substructure component being protected.

- In urban areas where a median barrier is necessary, the Bureau prefers using a 54-inch high barrier routed around and directly adjacent to a median pier in order to limit intrusion into the shoulder. In such cases it is Iowa DOT policy to design the pier for structural resistance since the barrier is not structurally independent.

Additional guidance related to substructure offsets behind barrier rail is provided under [BDM 3.14].

- Bridge locations where ROW, environmental or other economic impacts could occur, the clear zone may be designed to meet the acceptable clear zone width with approval from the supervising Unit Leader. If a frame pier is within the acceptable horizontal clear zone [BDM

6.6.2.6] and not sufficiently protected it will require a crash strut [BDM 6.6.4.1]. In that situation a T-pier is an alternative.

Dual bridges placed edge to edge with a 2-inch gap generally should have separate piers for each bridge.

Unless pier footings will bear on rock, the preliminary designer should set the preliminary bottom of pier footings 5 feet below finished grade. The final bridge designer shall verify that the final bottom footing elevation allows for a minimum one-foot cover thickness over the top of footing.

- **Railway conditions:** For railroad crossings, pier and footing guidelines are given in previous articles [BDM 3.4.1.3 and BDM 3.4.2.3]

- **Subsurface conditions:** Depth to bedrock is a factor in pier foundation type selection. Shallow bedrock at a pier may be conservatively defined as rock, regardless of type (e.g. shale, limestone, etc.) and quality (e.g. solid, hard, broken, weathered, highly weathered, etc.), that is 30 feet or less from the lowest of the ground line, stream bed, or design scour elevation. In the absence of shallow rock, piers are often supported on a footing with steel H piles. When shallow rock is present the designer should consider pier foundation options more closely. The majority of Iowa pier foundations are supported on steel H-piles. If rock is close to the surface, spread foundations for piers may be notched into the rock layer.

  Drilled shafts socketed into rock may be an option on some sites with anticipated shallow bedrock. For more detailed information on substructure policy and drilled shafts see BDM 6.3.1.1. In all cases the designer shall consider existing foundations, utilities, and drainage when locating drilled shafts.

- **Aesthetics:** If aesthetics is a consideration, the designer will need to follow the pier type and style established for the bridge.

- **Accelerated Bridge Construction (ABC):** Multi-span bridge replacement projects whether using traditional construction or ABC have occasionally utilized drilled shaft foundations just outside the footprint of the existing bridge before removal of the existing structure. This method allows the road to remain open to traffic for a longer period of time. In these situations, it is preferred the designer supply at least 18 inches of clearance between the perimeter of the drilled shaft and the closest edge of the existing superstructure, but a minimum clearance of 12 inches is acceptable. In some cases, it may be possible to increase clearance by removing a portion of the existing superstructure near the proposed shaft (for example remove a portion of a curb overhang on an existing bridge which is not structurally necessary). Early coordination with final design may be required when considering this option.

3.7.5 Wing walls

The preliminary designer shall verify that abutment wing walls provide an acceptable slope from the end wing to the berm. For typical PPCB or CWPG bridges, there should be no need to change standard wing wall lengths. However, if any of the following conditions apply, the designer shall check the need to increase wing wall lengths per criteria defined by BDM 6.5.4.3.1:

- Skew greater than 30 degrees
- Superelevation
- Beam depth greater than 63 inches, the BTE beam depth.

Refer to the commentary for details on the wing length check and design methods. Note that a 2.5:1 slope extended from the top of berm should be used for designing wings, even for situations with flatter berm slopes.

Any wing walls requiring more than 5 feet beyond the standard wing extension length may be steepened to a 2:1 slope pending approval by the Unit Leader. Non-standard wing lengths should be noted as such on the TSL. Final design will determine how the additional wing length will be addressed.

3.7.6 Foundation Conflicts

To simplify design and construction of a replacement bridge, it is the BSB preference to avoid existing foundation conflicts where possible. The preference to avoid foundations may affect the recommended bridge length, beam type, or span arrangements.

When a contractor removes a bridge, the existing foundations are typically left in place just below the grading surface. Some bridge replacement project locations may have had a previous bridge replacement project which could indicate the presence of additional foundations from a past bridge removal. Designers should review previous bridge plan sets to determine whether there may be additional foundations that could interfere. Estimates of previous bridge foundation remnants should be shown in the TS&L plan and longitudinal views, and potential conflicts or removals identified.

Refer to the bridge standards for proposed pier pile bent and abutment footing geometry. For proposed T-Piers or spread footings, example final plans may be used to estimate the proposed footing width. It is desirable for the layout to provide 2' minimum horizontal clearance from proposed footings to existing footings to help facilitate construction.

As approved by the Unit Leader, some projects may have unavoidable conflicts that must be addressed during final design. For these cases, all potential conflicts with existing structures, including old timber piling shall be noted on the TS&L Situation Plan and/or the Longitudinal Section and included in the designer notes.

3.8 Cost estimates

For preliminary cost estimating, the designer should use the costs in Table 3.8, recognizing that the estimates will be reasonably valid for comparing bridge options but not accurate for current construction costs. For a typical new bridge cost estimate, multiply the unit cost in the table by the bridge deck area, measured from outside edge to outside edge of deck and from face to face of paving notch. Adjust the cost upward for complexity, staging, and other applicable costs using the amounts listed in the table for each bridge type and bridge removals. If the construction situation is highly unusual, consult the supervising Unit Leader.

Refer to BDM 1.12 for additional guidance on preparing bridge and RCB culvert construction cost estimates.

Table 3.8. Preliminary costs for typical Iowa bridges

Cost Item	Unit Cost (1), (2)
New continuous concrete slab (CCS) bridge	$145/ft^2
New pretensioned prestressed concrete beam (PPCB) bridge	$150/ft^2
New continuous welded plate girder (CWPG) bridge	$175/ft^2
Complex bridges: variable width, urban area such as Des Moines, construction over traffic or RR track	Add for each item $10/ft^2
Staged bridges	Add 15%
CWPG: e.g. RR overheads, flyover ramps, complex interstate bridges, long, single span behind MSE walls	Consult with the Project Development Engineer
Cofferdam for pier construction	$50,000 per pier
Detour Bridge	(6)
Bridge removal	$20/ft^2
Bridge widening, including removal and staging	$ 245/ft^2
Bridge aesthetics	Add 3% (5)
RCB Culvert (CIP), in close proximity or corridor projects	$850/yd^3 (4)
RCB Culvert (CIP), individual projects or extensions	$900/yd^3 (4)
Revetment	$50/Ton (7)
Mobilization	10%
Contingency	B0, D0 = 20% (3) B1, D2 = 15% B2= 15% Prelim. designs B2 = 0% Final designs(8)

Table notes:

(1) Unit costs for new construction do not include mobilization, removal of an existing structure, extensive river or stream channel work, large quantities of riprap, clearing and grubbing, approach slabs, and other construction work not part of the bridge.

(2) Unit costs were current as of January 2025. Add 4% to the base bridge type unit cost for each calendar year beyond January 2026.

(3) See abbreviations [BDM 3.1.4] for definitions of these event codes. Utilize BRG-15002 (LS) to represent contingency cost for preliminary design estimates.

(4) Unit cost includes concrete, reinforcing bars, minor grading and construction.

(5) Additional aesthetic costs for gateway structures are “Add 5%”. For signature structures consult with Bridge Aesthetics Coordinator. See BDM Chapter 9 for more information.

(6) The state-owned detour bridge components are no longer being used. Detour bridges are rented on a case-by-case basis and budgeting costs should be obtained from the venders.

(7) Include revetment costs with bridge and RCB culvert estimates. After the B1 completion, revetment costs for RCB culverts are included with the roadway estimate.

(8) Final plans delivered to the Design Bureau that do not require structural design, complete with final notes, bid items, and quantities (example: a scour countermeasure).

3.9 Type, Size & Location Plans (TS&Ls)

The Bureau requires a TS&L for each new bridge, bridge sized culvert, or bridge that is to be widened or lengthened. The plan and longitudinal section (or profile) views should be plotted at a 1 inch = 40 feet scale on an 11-inch by 17-inchdrawing. For long bridges the designer may use an alternate scale, provided that the alternate scale meets the approval of the supervising Unit Leader.

Detailed structural design generally is not required for preparation of a TS&L. Thus pier and abutment details, pile types and lengths, and beam spacing need not be determined unless they affect vertical clearance, constructability, beam type, or structure length. Example TS&Ls are shown in the commentary.

A TS&L for a bridge or culvert of bridge length over a waterway requires the following additional items:

- Hydraulic computations

- Backwater computations
- Scour computations

TS&L plan submittal information to Iowa DOT should include the situation plan, site plan, miscellaneous detail sheet(s), and hydraulic calculations.

A Connect Preliminary Bridge Plan Checklist is provided on the Iowa DOT Bridge Bureau website. Designers shall apply the checklist as needed and include it with the submittal. Sheet layout guidelines are provided in the commentary.

3.10 Permits and Approvals

Iowa DOT projects are subject to federal and state laws and regulations and approval by agencies outside of the Iowa DOT. The majority of the permits and approvals apply to work in or over waterways, but there are also approvals applicable to railroad and highway grade separations.

3.10.1 Waterway

This article covers waterway requirements related to the following permits and coordination:

- Iowa Department of Natural Resources (Iowa DNR) Flood Plain Construction Permits (also called Flood Plain Development Permits),
- Records of Coordination of Flood Plain Development for cities and counties that participate in the National Flood Insurance Program (NFIP),
- Iowa DNR Sovereign Lands Construction Permits,
- Corps of Engineers 404 Permits,
- Corps of Engineers 408 Approval,
- Coast Guard Approval,
- Drainage District Approval.

Iowa DNR Flood Plain Construction Permits

For a bridge or large culvert over a waterway the designer is obligated to meet the requirements of the Iowa DNR and other government agencies. Cases that require an Iowa DNR permit are summarized from the Iowa Administrative Code (IAC) in Table 3.10.1-1. Please review the DNR website for checklist and other required submittal information.

It is preferred that the hydraulic designer submit the Flood Plain Development Permit joint application, utilizing the Iowa DNR's web-based application process. The DNR will perform a review for Sovereign Lands permit as well as Flood Plain permit for each submitted application. The Iowa DOT Location and Environment Bureau will submit the 404 application and pertinent information to the Corps at a later date.

Table 3.10.1-1. Iowa DNR Flood Plain Construction Permit requirements (summary of IAC 567—Chapter 71)

Project Type	Location	Construction Permit Required? Yes, if drainage area meets threshold.
Bridges, culverts, or road embankments that cross the stream	Rural area(1) – floodway	100 square miles or more
	Urban area(2)	2 square miles or more
Road embankments that do not cross the stream	Rural area(1) – floodway and flood plain	10 square miles or more if obstructing 3% or more of the channel, or 15% or more of the flood plain
Channel changes(3)	Rural area(1) not associated with a road project	10 square miles or more
	Rural area(1) associated with a road project	10 square miles or more if (1) more than 500 feet of channel is being altered or (2) length of existing channel is reduced by more than 25%
	Urban area(2)	2 square miles or more
	Protected streams(4)	Any area
Bank stabilization, includes grade control structures if bank stabilization is involved	Rural area(1)	
		10 or more square miles if channel cross section is being reduced by 3% or more
	Urban area(2)	
		2 square miles or more
Levees, Floodwalls & Dikes	Rural	10 square miles or more
	Urban	2 square miles or more
Dams (ponds), flood plain excavation, or stockpiling	Varies(5)	Varies(5)
Misc. structures, obstructions or deposits. Includes grade control structures. Some exemptions exist for signs, utility poles and navigational objects	Rural area(1)	10 square miles or more if obstructing 3% or more of the channel, or 15% or more of the flood plain
	Urban area(2)	2 square miles or more

Table notes:

(1) Rural area is defined as the entire project (bridge, culvert, embankment and related work) outside of an area defined or designated as an urban area (completely outside incorporated City limits).

(2) Urban area is defined as part of the project (bridge, embankment and related work) is within the City limits.

(3) Channel change means either (a) the alteration of the alignment, location, or length of a channel of a stream or (b) a substantial modification of the size, slope, or flow characteristics of a channel of a stream for a purpose related to the use of the stream's flood plain surface…. Increasing the cross-sectional area of a channel by less than 10 percent is not considered a substantial modification of the size, slope, or flow characteristics of a channel of a stream. See IAC 567—70.2.

(4) See IAC 567—Chapter 72 for a list of protected streams. Because petitioners may request that streams be added to the list at any time, the designer should contact the Iowa DNR regarding updates to the list if a project involves channel changes.

(5) See IAC 567—Chapter 71 and 73.3.

Through the permit process the Iowa DNR checks that a project's design and supporting documents submitted with the permit application meets the requirements of Flood Insurance Studies (FIS) of cities and counties participating in the National Flood Insurance Program (NFIP). It should be noted that a "no-rise" certification is not required for Iowa DOT projects since the State does not obtain approval from local entities.

For a bridge that requires a Flood Plain Construction Permit the Iowa DNR establishes maximum backwater and minimum freeboard limits, and the limits are summarized in Table 3.10.1-2. Refer to Backwater Definition section below for the topographic assumptions. If the structure exceeds the maximum backwater limits, the Iowa DNR may require that the Iowa DOT obtain flowage easements for the excess backwater. The preliminary designer shall provide preliminary flowage easement limits.

Table 3.10.1-2. Iowa DNR backwater and freeboard requirements for bridges and culverts (summary of Iowa Administrative Code 567—Chapter 72)

Bridges and Road Embankments, and Associated Channel Changes(1)			
Damage Potential	**Maximum Backwater**		**Minimum Freeboard**
		Q_{100}	
Low(2)		1.5 feet	3.0 feet above Q_{50}(3)
High(4) or Maximum(5)		1.0 foot(6),(8),(9),(10),(11)	3.0 feet above Q_{50}(3)
Culverts and Associated Channel Changes(1)			
Culvert Type	**Maximum Backwater**		**Minimum Freeboard**
New culverts or culverts replacing bridges	Same as for bridges		No minimum(7)
Culverts replacing culverts	Backwater of existing culvert, or maximum backwater allowed for bridges, whichever is greater		

Table notes:

(1) These rules are applicable to bridges and culverts including channel changes on the floodway of any stream draining between 10 and 100 square miles when either (a) more than 500 feet of the existing channel is being altered or (b) the length of the existing channel is being reduced by more than 25 percent.

(2) Low damage potential means all buildings, building complexes, or flood plain use not defined as maximum, high, or moderate damage potential. See IAC 567—70.2.

(3) Unless a licensed engineer provides certification that the bridge will be designed to withstand the applicable effects of ice and the horizontal stream loads and uplift forces associated with the Q_{100}…. See IAC 567—72.1 and BDM 3.2.2.4.

(4) High damage potential means the flood damage potential associated with habitable residential buildings or industrial, commercial, or public buildings or building complexes of which flooding would result in high public damages…. See IAC 567—70.2.

(5) Maximum damage potential means the flood damage potential associated with hospitals and like institutions; buildings or building complexes containing documents, data, or instruments of great public value; buildings or building complexes containing materials dangerous to the public or fuel storage facilities; power installations needed in emergency or buildings or building complexes similar in nature or use to those listed above. See IAC 567—70.2.

(6) Backwater cannot exceed these values unless increase is mitigated or other measures are taken. See IAC 567—72.1(2).

(7) The Iowa DNR may evaluate freeboard on a case-by-case basis if debris and ice are a problem.

(8) For a bridge and roadway embankment located within a stream reach for which the Federal Emergency Management Agency has published a detailed Flood Insurance

Study which includes a floodway, the backwater for Q_{100} shall not exceed the surcharge associated with the delineation for the floodway at that location.

(9) In no case shall the Q_{100} backwater effects of a bridge or road embankment reduce the existing level of protection provided by certain flood control works, unless equivalent remedial measures are provided.

(10) Bridge and roadway projects where the proposed backwater exceeds existing conditions (new alignment, grade raise, smaller bridge, etc.) should satisfy the maximum 1.0 foot criteria. A waiver must be obtained with flowage easements for high damage potential structures that exceed 1.0 foot of backwater. A waiver for low damage potential areas is not required unless the backwater exceeds 1.5 feet.

(11) Bridge and roadway projects that decrease the backwater from existing conditions should satisfy the maximum 1.5 foot criteria as long as the backwater at a high damage potential location is 1.0 foot or less. A waiver must be obtained with flowage easements for low damage potential areas that exceed 1.5 feet of backwater.

Backwater Definition - Iowa DNR Floodplain Development Regulations

Unless noted otherwise, the base topographic condition evaluated is the ‘Pre-Development’ condition. This is a topographic assumption with the development being evaluated removed (e.g. roadway embankment with associated structures). Adjacent topography is included in the Pre-Development condition if it is not a part of the development being evaluated.

Backwater is the difference between the topography being evaluated (e.g. Proposed) and the base topographic condition (Pre-Development).

Exceptions to the Backwater definition above are related to the criteria in footnotes (8) FIS Floodway and (9) Flood Control Works of Table 3.10.1-2.

For (8) which includes criteria related to an established FIS Regulatory Floodway, the base topographic condition evaluated is the ‘FIS Base’ condition. FIS Base condition is the topography utilized in the FEMA FIS being used for study purposes (effective or pending). If not practical to use the FIS topography (older 1D model, 2D models etc.), ‘Existing’ condition, adjusted as possible to reflect the conditions on adoption of the FIS, can be utilized as the FIS Base condition. ‘Existing’ condition reflects the current (at time of study) topography including the existing development being evaluated.

For (9) which includes criteria related to flood protection work, the base topographic condition evaluated is the ‘FIS Base’ or ‘Existing’ condition if an FIS is not in effect, similar to the above.

For the above two cases, (8) and (9), backwater is the difference in water surface between the topography being evaluated (e.g. Proposed) and the base topographic condition (FIS Base or Existing).

Upon completion of activities authorized by a flood plain permit and any associated mitigation, the BSB Preliminary Unit Leader shall submit the "Iowa DNR Notice of Completion" through the PERMT web site.

NFIP Record of Coordination Flood Plain Development

Any project on a stream that does not meet the drainage area thresholds in Table 3.10.1-1 does not require a flood plain permit from the Iowa DNR. However, if the project is in a city or county that is participating in the National Flood Insurance Program (NFIP), the designer shall perform a hydraulic review and coordinate with the community to ensure compliance with the NFIP. If a consultant is the designer a Record of Coordination of Floodplain Development form [BDM 3.11 as required under IDOT PPM 500.10] shall be forwarded to the Iowa DOT for distribution to the Iowa DNR and the appropriate District Engineer. The coordination effort is not considered a permit from the community. A complete list of cities and counties in the NFIP and status of their flood insurance studies is available at the following FEMA web site:

http://msc.fema.gov/portal/advanceSearch

Iowa DNR Sovereign Lands Construction Permits

Any construction activity on, above, or under state-owned water and land or land managed by the Natural Resource Commission for public access requires an Iowa DNR Sovereign Lands Construction Permit. This permit is different from the Flood Plain Development Permit.

State owned or managed lands that require the Sovereign Lands Construction Permit are shown below. For more information, visit the Iowa DNR web site:

- Meandered Sovereign Lakes
- Meandered Sovereign Rivers
- State Forests
- Wildlife Management Areas
- State Parks, and
- State Preserves.

The majority of DOT projects requiring a Sovereign Lands permit will be structures crossing a Sovereign Meandered River. There are portions of 14 rivers in Iowa that are legally classified as “meandered”, which means the State of Iowa owns the streambed and banks up to the ordinary high water mark. The meandered rivers are listed in the commentary for this article [BDM C3.10.1]. This permit application is typically submitted by the hydraulic designer as part of the B01 effort using the Iowa DNR’s joint application web-based process at the same time as the Flood Plain Development Permit.

There are also cases where a DOT project could have construction activity on, above, or under land owned or managed under the jurisdiction of the State, requiring a Sovereign Lands permit. An online Geospatial dataset for Iowa is available to assist in identifying these lands. The dataset is titled “Public Lands Used for Conservation and Recreation”, and it includes both data on property owners and managers. If a Sovereign Lands permit is determined to be needed for a project that does not require a B01, the preliminary designer may still be tasked with submitting the joint application due to familiarity with the process.

The DNR‘s PERMT joint application covers both the Flood Plain and Sovereign Lands permit for a project. A single Sovereign Land permit may include more than one type of Sovereign Land, as long as the application includes plans and identifies the full extent of the project within areas requiring a Sovereign Lands permit. The DNR may request on a project-by-project basis an aerial photograph or zipped shape file fully showing project extents to identify and confirm the types of state owned or managed lands as part of the application.

For a State managed public access area, permission from the property owner is also required. In addition, state owned or managed properties with a National Resource Conservation Service (NRCS) easement would require permission from the NRCS.

The Iowa DNR will typically send out one response for both the Iowa DNR Flood Plain and Sovereign Lands program.

Corps of Engineers 404 Permits

A Corps of Engineers 404 Permit is needed for all bridges over water, major highway projects, and stream bank repair projects. The designer should notify the Location and Environment Bureau when the TS&L for a bridge is complete. The Location and Environment Bureau will complete and submit the application for the Corps of Engineers 404 Permit at a later date.

Corps of Engineers 408 Approval

The Corps of Engineers also has requirements under 33 USC Section 408 to ensure that project modifications within a critical area of a Flood Risk Reduction Project (FRRP) constructed by the U.S. Army Corps of Engineers do not adversely impact the operation or integrity of the FRRP. The critical area is generally defined as 300' riverward to 500' landward of a FRRP centerline, but may be a greater distance if identified in a specific Operations and Maintenance Manual. The designer shall identify the potential need for Section 408 approval as part of the concept development effort (Ref: Bridges and Structures Bureau Concept Attachment).

Bridge replacement projects typically do not change the alignment or elevation of a flood protection levee. Therefore, most bridge or roadway related projects will be considered a minor impact to the FRRP, but will still require Section 408 approval.

Early coordination with the USACE designated Section 408 Coordinator and/or the non-federal levee sponsor is strongly recommended following completion of the final concept. In some cases, a pre-application meeting may be warranted. The intent of the early coordination is to determine the appropriate submittal option and level of detail for a specific request. If the physical characteristics of the flood protection levee are modified or the operation or hydraulic capacity of the FRRP is changed, 408 reviews may take 12 to 18 months to review since approval from Corps Headquarters is required. This review duration will need to be considered in the project schedule.

There are three submittal options for a Section 408 permission request: Categorical Permission, Single-Phased Review, and Multi-Phased Review. The project submittal option will depend on project size, level of complexity, and potential impacts. A categorical Permission is not the same as a National Environmental Policy Act (NEPA) Categorical Exclusion.

For detailed guidance on the approval process, refer to the "Policy and Procedural Guidance for Processing Requests to Alter USACE Civil Works Projects Pursuant to 33 USC 408" (Engineer Circular No._1165-2-220). Paragraph 11 lists the basic requirements for a complete 408 request, as summarized below:

a. Statement of No Objection. For USACE projects with a non-federal levee sponsor, a "Statement of No Objection" from the non-federal sponsor is required. A non-federal sponsor typically will have operation and maintenance responsibilities, cost share investment, and/or hold the real property for the levee.
   - Feedback from the non-federal sponsor shall be considered in the request.
   - The Iowa DOT District will obtain concurrence from the local agency for the project.

b. USACE Project and Alteration Description
   - The request shall include Identification of the USACE project.
   - The request shall include a complete description of the proposed alterations, including drawings, sketches, maps, and plans. Alterations are any action that builds upon, alters, improves, obstructs, or occupies an existing USACE project, including those operated and/or maintained by a non-federal sponsor. Alterations can be temporary or permanent.
   - The following are typical examples of Iowa DOT project alterations requiring approval: new bridges, bridge replacements, soil borings, berm/channel repair, revetment placement, drainage structures/with gates, project excavation or embankment, new or relocated utilities.
   - Need for approval of bridge repair or maintenance projects will be determined on a case-by-case basis. Typical examples include bridge deck overlay, redeck, barrier rail replacement, deck joint repair, etc. Some bridge/causeway maintenance and repair activities do not require approval; however, coordination or concurrence from USACE may be required to verify the construction approach. Approval may be required for temporary occupation or structures necessary to conduct the work.

c. Technical Analysis and Design

- Consult the USACE 408 Coordinator relative to applicable standards and the level of detail necessary to ensure that the proposed alteration meets current USACE policy and standards.
- A seepage analysis, a geotechnical evaluation, or construction of temporary ring levee may be required for some situations. Coordinate with the Iowa DOT Design Bureau if these requirements are identified.
- Hydrologic and hydraulic (H&H) analysis may be required for some situations to determine changes resulting from proposed Section 408 alterations. The EC 1165-2-220, Appendix H outlines requirements for an (H&H) system analysis. Coordinate with the Iowa DOT Prelim Unit if H&H requirements are identified.
- Hydraulic modeling of a temporary stream crossing may be required to assess the impacts to an FRRP during construction of a bridge, when construction access is needed across a channel within the levee system. The design of a temporary stream crossing should be submitted as part of the Section 408 review. Coordination with the Construction and Materials Bureau may be warranted to address constructability issues to determine the appropriate height, width and location of a temporary stream crossing to provide the contractor with a basic plan for accessing the bridge.
- For alterations (to the levee) requiring professional design services, a certification that the design underwent a quality control process is required.
- A Safety Assurance Review (SAR) may be required for design or construction activities where potential hazards pose a significant threat to life safety. When required, the USACE will help to coordinate the development of the review plan.

d. Environmental and Cultural Resource Compliance

- Section 408 permission is a federal action subject to the NEPA and other federal environmental and cultural resources compliance requirements. The project is expected to not result in significant effects to the environment.
- The request shall include support information and documentation that is identified as necessary to assess compliance. Effort may include species surveys, habitat assessments, and/or cultural resource surveys. The typical approach is to complete this effort internally within the Iowa DOT Location and Environment Bureau (LEB). Coordinate with the LEB to confirm whether they will be providing the required information.
- Documentation may include but is not limited to NEPA documentation, Section 404-permit (a.k.a. “Regulatory permit”), Section 401 water quality certification, compliance with Section 7 of the Endangered Species Act (ESA), essential fish habitat consultation, tribal consultation, etc.

e. Real Estate Requirements

- A description of the real property required to support the proposed alteration shall be provided. Coordinate with the Iowa DOT District and/or the Right-of-Way Bureau, as needed.
- The EC 1165-2-220 must be applied to alterations proposed within the real property identified and acquired for the USACE project, or that the non-federal sponsor has provided for the USACE project under the terms of a Project Partnership Agreement (PPA). Proposed activities will be evaluated to determine their compatibility with the purpose of the federal project.
- Maps clearly depicting property shall be provided.
- In cases in which a USACE real estate decision and Section 408 decision are both needed, the USACE District will coordinate the evaluations to the extent practicable. The Section 408 decision must be rendered before or concurrent with, but not after, the USACE real estate decision.

f. Operation, Maintenance, Repair, Replacement, and Rehabilitation (OMRR&R)

- Identify any projected requirements for OMRR&R needed throughout the life of the proposed alteration and the responsible entity. Coordinate with the Iowa DOT District if any changes are anticipated.
- If operation and maintenance of the USACE project is affected by the alteration, the DOT must provide written documentation that the non-federal sponsor agrees to assume responsibility for the changed OMRR&R at no cost to the federal government or justify that USACE would be proposed to assume responsibility. As-builts and sufficient information to update the portion of the O&M manual shall be provided. E.g. a new RCB with closure gate through the levee – non levee sponsor may agree to be responsible for operation and maintenance.

g. If applicable, written statement regarding whether credit under Section 221 of the Flood Control Act of 1970, as amended, or other law or whether approval under Section 204 of WRDA 1986, as amended is being or will be sought must be provided.
   - This credit is not anticipated to be applicable for Iowa DOT projects within the levee critical zone.

There may be an opportunity to use funding agreements with the USACOE to expedite the review and evaluation of a Section 408 request associated with a federal-aid transportation project. Coordinate with the LEB relative to funding agreements.~~There may be situations when hydraulic modeling of a temporary stream crossing would be required to assess the impacts to an FRRP during construction of a bridge. The design of a temporary stream crossing should be submitted as part of the Section 408 review. Coordination with the Construction and Materials Bureau may be warranted to address constructability issues to determine the appropriate height, width and location of a temporary stream crossing to provide a contractor a basic plan for accessing the bridge.~~
~~Most bridge projects can be reviewed by the Corps with submittal of a TS&L and concurrence from the local agency in support of the project. The District will obtain concurrence from the local agency for the project, and preliminary bridge design will submit the Section 408 information.~~

The coordination summarized in the paragraphs above will assist in determining the scope and task assignments for obtaining the Section-408 approval. The bridge preliminary designer will typically be responsible for the TS&L and Hydraulic Report (when required).

~~If the physical characteristics of the flood protection levee are modified or the operation or hydraulic capacity of the FRRP is changed,408 reviews may take 12 to 18 months to review since approval from Corps Headquarters is required.~~

The Section 408 decision must be finalized before or concurrent with the Section 404 Regulatory decision. The USACE reviewers will coordinate the evaluations to the extent practical. Often the decision letter will include both the Section 408 approval and 404 permit.

The B05 event date is cleared by the Prelim Unit leader following receipt of the project Section 408 Letter of Permission.

~~There may be situations when hydraulic modeling of a temporary stream crossing would be required to assess the impacts to an FRRP during construction of a bridge. The design of a temporary stream crossing should be submitted as part of the Section 408 review. Coordination with the Construction and Materials Bureau may be warranted to address constructability issues to determine the appropriate height, width and location of a temporary stream crossing to provide a contractor a basic plan for accessing the bridge.~~

Coast Guard Permit

The U.S. Coast Guard requires a permit for all projects over the Mississippi and Missouri Rivers. Appropriate horizontal and vertical clearances for the navigation channel shall be coordinated with the USCG during preliminary design. A letter from the USCG documenting the design criteria is desired for the file. Bridge Final Design submits the USCG permit application 6 months prior to project letting.

Drainage District Approval

Design approval from a Drainage District is required when a culvert (or bridge) is constructed over a Drainage District channel. Statewide Drainage District information is available at either of the links below to determine whether an Iowa DOT project crosses a Drainage District channel.

> ~~Iowa DOT Web App Viewer (includes the statewide Drainage District shape file from the Iowa DNR website, June 2021):~~
> ~~https://iowadot.maps.arcgis.com/apps/webappviewer/index.html?id=ad99c079f70044a09091c6d59ed5ea8b~~

~~or~~ Iowa DNR website (statewide Drainage District shape file for downloading): https://www.arcgis.com/home/item.html?id=fd42f39703d84dffb73c99dfcfc70c85

Iowa DOT District staff should be able to verify when the coordination will be required. Coordination should be initiated in the concept phase of a project to request the required channel design flowline (may be buried to allow future clean out), datum correlation (if applicable), cross section, and slopes, etc. The Iowa DOT District staff will generally be the contact for all communications with the Drainage District representatives. When applicable, the need for Drainage District coordination shall be identified on the Bridge Bureau Attachment for Concept Statement.

3.10.2 Railroad

All bridges over railroads shall be reviewed and approved by the railroad company. The Bridges and Structures Bureau (BSB) preliminary designer is referred to article BDM 3.4.4 for railroad bridge submittal requirements.

3.10.3 Highway

In some cases, Federal Highway Administration (FHWA) approval is required for federal funding programs. FHWA approval is required for major interstate projects or projects with modified interchanges. On a case by case basis, FHWA would also like to review bridges that are unique or controversial due to environmental or ROW issues. (Estimated contract value is no longer a consideration.)

The Bridges and Structures Bureau will coordinate the FHWA approvals. The BSB preliminary designer shall submit a copy of the transmittal form and TS&L to the FHWA.

3.11 Forms

Preliminary design involves the use of several forms, not all of which are used on every project. A summary of the forms is given in Table 3.11. Blank Iowa DOT forms that have a form number can be downloaded from the form library.

Table 3.11. Preliminary forms

Form Title	Form Number
Bridge Cost Estimate for Concept Statement (1) (2)	---
Bridge Bureau Attachment for Concept Statement (1) (3)	---
Joint Application for requesting Iowa DNR Flood Plain Construction Permits, Iowa DNR Sovereign Lands Construction Permits, and Corps of Engineers 404 Permits (4)	5423234
Record of Coordination, Floodplain Development (1)	532001

Table notes:

(1) See the commentary for examples of completed forms. Templates should be downloaded from the Iowa DOT BSB website.
(2) Not required for consultant prepared concept statements.
(3) Required for all bridge replacement D00 events. Attach to final concept statement.
(4) The DNR has phased out the joint application. When using the DNR web-based permit application process, Form 36 information is filled out electronically in lieu of the separate completed form.

3.12 Noise Walls

The noise wall design process is described in DB DM 11D-2. In general, the Design Bureau is responsible for the noise wall geometry, and the BSB is responsible for the structural design. The wall type may be pre-determined by aesthetic guidelines and will require coordination between the Design

Bureau, the Location and Environment Bureau, the District and the Bridges and Structures Bureau. Consistent with the selected wall type, noise wall geometry including horizontal alignment, top of wall profile, bottom of wall profile and proposed grading surface will be provided by the Design Bureau.

The preliminary bridge design engineer will initiate the structural design process, including design number assignment and creation of TSL. Preliminary design shall include several responsibilities:

1) Verify that the proposed geometry is consistent with the wall type and structural design needs.

   A common noise wall type may be a precast column/panel system with 4-foot height full panels and 2-foot high half panels. An “H” shaped concrete column (typical spacing on 16’-0 center to center) embedded into a drilled shaft will secure each end of the panels. Bends in the wall horizontal alignment can be accommodated at center column locations. Wall top profile steps up or down should be made in two foot increments, except in some cases at the end of the wall where a 4-foot top step can be used. If a half panel is required, it is typically placed at the bottom. However, in final design panel positions may be shifted to accommodate final details or aesthetics. One foot of panel embedment below proposed ground surface is desired (6 inches min.) to reduce the possibility of gaps forming under the wall.

2) Verify horizontal alignment adequacy with respect to Vehicle Collision Force guidelines listed in AASHTO LRFD Section 15.8.4: Design of Sound Barriers.

   Cases where vehicle collision forces need not be considered are summarized below.

   a) Noise walls located beyond the acceptable clear zone.
   b) Noise wall/barrier rail systems within the clear zone that have been successfully crash tested.
   c) Noise walls behind a crashworthy traffic railing with a setback of more than 4.0 feet. The setback is measured from the traffic face of the traffic barrier rail.
   d) Noise walls or portions thereof at locations where the collapse of the wall has minimal safety consequences, as determined by the Owner.

   The typical noise wall precast column/panel design is not conducive to collision force design. If AASHTO guidelines would require consideration of vehicular collision force in the design, the preliminary designer should coordinate with the Design Bureau to determine an acceptable solution.

3) Verify that the noise wall does not conflict with utilities

   Depending on the confidence level of survey data, a request to have the utility depth and location potholed at the crossing may be prudent. Input from the utility owner may also be requested if there is a question relative to the adequacy of design vertical or horizontal clearance. In some cases, utilities may need to be relocated. To avoid conflicts with drilled shafts in precast column and panel designs, a “utility bridge” can be considered. In other cases, the utility can pass under the noise wall panels between drilled shafts without being impacted (a minimum of 2 feet of vertical clearance is desired, but less can be considered on a case by case basis).

   For existing or proposed utilities that will be longitudinal to a proposed noise wall, a desired horizontal clearance should be 15 feet or as otherwise determined by the District and Design team. Utility type, depth, construction impacts, utility related features (vent pipes, hand holes, access points, etc.), and potential for future utility maintenance shall be considered.

   Utility features may need temporary removal/replacement or need to be otherwise protected. Issues that could affect contractor work area or access should be considered.

4) Verify that surface water drainage is addressed

5) Review design to identify spilt profiles with differential grading

   It is desired to keep the difference in proposed grade on each side of a wall to less than 2 feet. When proposed grade differences greater than 2 feet are required, the noise wall will also need to function as a retaining wall. These areas should be noted on the TSL.

6) Additional coordination will be required between BSB and DB when a noise wall is located in close proximity behind a retaining wall.

   An example noise wall TSL can be provided upon request.

3.13 Submittals

Project Wise folder structure, CADD/pdf file submittals, and other deliverables shall follow the policy guidelines available on the website. Preliminary design guidance includes but is not limited to the documents listed below:

Connect: https://iowadot.gov/bridge/Automation-Tools/CONNECT-Applications
Connect: Preliminary Design Plan and Model Deliverables for B1
Connect: B01 Completion Designer Checklist – Bridge

3.14 Zone of Intrusion

A truck or high center-of-gravity vehicle may lean over a barrier upon impact. For this reason, an offset to structure elements will lessen the likelihood of vehicle contact.

The region above and behind the top traffic face corner of the barrier during an impact is known as the Zone of Intrusion (ZOI). ZOI guidelines for different barrier test levels and heights have been developed based on crash data and published in NCHRP Report 1018, Zone of Intrusion Envelopes for MASH Impact Conditions for Rigid Barrier Attachments (2022). Where practical on new or reconstruction projects, the designer should try to accommodate this clearance when locating piers, abutments, walls, or other structural elements behind a barrier. See Iowa DOT Design Manual 8A-6 for detailed information related to the preferred ZOI setback dimensions for various barrier heights and for various roadway conditions.

When bridge piers and overhead sign truss supports occur along a roadway (but not on a bridge) and will be located behind permanent concrete barrier rail, see Iowa DOT Design Manual 8C-1 for the preferred ZOI setback dimensions for various barrier heights and for various roadway conditions.

When bridge superstructure, overhead and cantilever sign support structures, bridge-mounted signs and supports, light poles, bridge-mounted fences, or other obstructions may be within the ZOI of the barrier on the bridge, the following guidance applies:

Bridge superstructure (critical) - When bridge superstructure extends above the bridge roadway, it is critical to provide protection to structural members (truss, arch ribs, stays, etc.) that may be at risk of contact by a vehicle during a crash event. Crashes involving heavy vehicles are of particular concern. It is generally preferred that a minimum 44-inch tall MASH TL-5 barrier is used. The minimum preferred setback distance measured from the top traffic face corner of the barrier to the nearest superstructure element is 3.25 feet. In some cases, such as when issues of bridge security are of high concern, consideration shall also be given to using a taller TL-5 barrier or a shielding barrier as tall as 54 inches. In addition, if the ZOI established during the barrier's crash testing (known as "working width" in test documentation) exceeds 3.25 feet, the working width of the barrier should be used as the minimum setback distance. Exceptions can occur when such bridges carry roadways that have characteristics that make high-speed crashes involving heavy vehicles extremely unlikely. Corroboration of working width reduction by an accredited testing agency (e.g. MwRSF, TTI) is necessary. Discussion regarding appropriate barrier height for bridges with superstructure elements above the roadway should be part of the early bridge

planning process involving all project stakeholders, including neighboring state officials when a border bridge is involved. Contact the BSB Methods Engineer for all cases that include bridge superstructure above the roadway.

Bridge-mounted overhead and cantilever sign support structures (critical) – It is generally preferred that a minimum 44-inch tall MASH TL-5 barrier is used. The minimum preferred setback distance measured from the top traffic face corner of the barrier to the nearest superstructure element is 3.25 feet. In some cases, such as on horizontally curved bridges, consideration shall also be given to using a taller TL-5 barrier or a shielding barrier as tall as 54 inches. Exceptions can occur when the bridge roadway has characteristics that make high-speed crashes involving heavy vehicles extremely unlikely. Overhead bridge-type and overhead cantilever-type sign supports are limited to pier locations. Single mast-arm supports for signs (and traffic signals) may only be mounted at pier locations on an extended pier cap (i.e., not on the bridge superstructure.)

Bridge-mounted signs (not overhead or cantilever) – There are 2 types of bridge-mounted signs that are not overhead signs for traffic on the bridge:

> **Type 1**: **Bridge barrier-mounted, non-rigid small to medium signs providing direction to traffic using the bridge roadway** - Choice of barrier height must, at a minimum, place the sign's vertical support post and any additional rigid sign structure outside of the ZOI of a SUT cab for the roadway conditions in accordance with guidance found in Design Manual 8A-6. Barrier-mounted signs that are within the SUT cargo box ZOI are allowed only when there is no risk of sign debris falling onto a roadway or pedestrian facility below the bridge. If necessary, reposition the sign to be slightly beyond (in the direction of bridge traffic) the location of the at-risk facility below the bridge.
>
> **Type 2**: **Bridge-mounted rigid signs providing direction to traffic on the roadway under the bridge (grade separations)** - A minimum barrier height of 44 inches shall be used, and the choice of barrier height must place the rigid sign support structure outside of the ZOI of a SUT cargo box for the roadway conditions in accordance with guidance found in Design Manual 8A-6. On high-speed bridge roadways, barrier height of up to 54 inches may be necessary to meet this guidance. If a bridge-mounted sign directing traffic underneath a grade separation bridge cannot be shown to be outside of the SUT cargo box intrusion zone for a standard TL-4 or TL-5 barrier, but the conditions on the bridge are identified as TL-2, it may be possible to assume a smaller ZOI. TL-2 conditions are "taken to be generally acceptable for work zones and most local and collector roads with favorable site conditions as well as where a small number of heavy vehicles is expected and posted speeds are reduced" (AASHTO LRFD 13.7.2). Crash history at the project site may also be considered, as well as other factors. Contact the BSB Methods Engineer to discuss alternate solutions. If the bridge carries a pedestrian sidepath and signage is needed on the path side of the bridge, there are no ZOI considerations and the minimum barrier height may be less than 44 inches.

Bridge-mounted light poles –The choice of barrier height must place the light pole outside of the ZOI of a SUT cab for the roadway conditions in accordance with guidance found in Design Manual 8A-6. Iowa DOT BSB Standard 1030As1 details are assumed to provide roughly 26 inches of setback distance from the top traffic face corner of a 44" single slope barrier to a typical 8-inch diameter light pole, and are acceptable for TL-4 and TL-5 conditions only if a 44" barrier height is used. If the conditions are TL-4 and a 38" single slope barrier is used, a non-standard light pole support may be required to gain the necessary setback distance to the pole. Iowa DOT currently has no approved breakaway light poles designed for use on bridges. Breakaway poles must not be used on bridges where debris could fall on roadway or pedestrian facilities below the bridge.

Bridge-mounted fences – Contact the BSB Methods Engineer for all proposed uses of barrier-mounted fence. Fences may occasionally be allowed when roadway conditions (i.e. posted

speed, low volumes of heavy vehicles, suitable shoulder width for bicycles, etc.) are favorable. Fences are typically required to be mounted to the back side of the barrier. Use of non-crash-tested fences is not allowed under TL-4 and TL-5 conditions. These applications require the use of crash-tested fence attachments. The BSB Methods Engineer may be aware of appropriate options for this type of application.

Other obstructions (not including critical structures) – The choice of barrier height must place the obstruction outside of the ZOI of a SUT cab for the roadway conditions in accordance with guidance found in Design Manual 8A-6. This includes both rigid and non-rigid bridge or barrier attachments, including such features intended for aesthetic enhancement. In addition, designers should be aware of potential ZOI checks within complex system to system interchanges with multi-level bridges. On high-speed bridge roadways, barrier height of up to 54 inches may be necessary to meet this guidance.

3.15 Temporary Bridges

The state-owned temporary bridge components utilized for on-site detours have been retired as of 2020. Our current policy when temporary or on-site detour bridges are needed, is to use bridge components either rented or owned by the contractor. Typically, the temporary structure type may be a beam or truss bridge. However, for competitive bidding purposes, a bridge type will not be explicitly defined. The preliminary design engineer will need to coordinate with potential vendors relative to the likely bridge type and estimated cost. Each temporary bridge will have a design number assigned under the replacement bridge FHWA number and a TSL completed. An example TSL is included in the Commentary.

The Temporary Bridge TSL shall specify key design features. Detailed specifications will be completed by the final bridge designer. Key features may include but are not limited to the list below:

- minimum roadway width
- minimum overall bridge clear span length
- minimum low beam elevation
- maximum superstructure depth (based on the road profile)
- minimum area of opening below the design stage
- maximum number of piers, if applicable

<u>Roadway Profile</u>
The design roadway profile will be based on the anticipated bridge type and estimated superstructure depth. A note shall be provided on the TSL stating that if the contractor chooses a system with deeper superstructure, they will need to field adjust the roadway upward to keep the low beam at or above the specified elevation.

<u>Stream Crossings/Hydraulic analysis</u>
A hydraulic model with the temporary bridge in place is necessary to determine the design stage and other hydraulic parameters. Freeboard and backwater criteria required for permanent bridges do not apply.

It is desired to set the operational low beam above the 10-year stage, if possible. Stage, calculated scour, and average bridge velocity shall be considered for the lesser of the 10-year or incipient overtop event. In addition, the 25-year stage and average bridge velocity shall be provided. The 25-year data will be used to establish buoyancy and stream forces related to temporary bridge tiedowns and possibly other final design requirements for the temporary bridge.

Spill through berms and/or revetment design may be specified in the plans. If abutment, berm, and revetment conditions are subject to the temporary bridge features, these conditions may be specified to be contractor design and paid as incidental to the substructure bid item. An appropriate note to the final designer is required to convey this need in the plan’s bid item reference notes.

Bridge Watch Dataset

Temporary bridges over streams or rivers will be classified as scour critical. For these sites, a Bridge Watch Dataset shall be developed by the preliminary design engineer. The Bridge Watch Dataset will be entered by others into the Bridge Watch application after contractor notification of construction completion.

The Bridge Watch Dataset requires the following information:

1. Monitoring Plan Text (a.k.a. Plan of Action or POA). Format shall be as .doc or .txt for cut and paste capability into the database. A B1 level plan example is included in the Commentary. Utilize as a template, edit as required. The template addresses information that needs to be provided at a minimum. If the responsible maintenance garage name is readily available, include, otherwise the name will be provided by others. Data not included in the template but included in the final Monitoring Plan (FHWA No., rainfall depths, etc.) is provided by others. For temporary bridges, the B1 level plan will contain some unknown items (example actual low beam elevation). Once known, these outstanding items will be provided by the contractor and an updated version of the plan will be required.
2. B1 TSL in pdf format. Include any sheets showing revetment or countermeasures.
3. Detour roadway Plan and Profile Sheet.
4. StreamStats Basin Area GIS file (globalWatershed.shp) (ESRI ShapeFile format)

A copy of the pending Bridge Watch dataset/transmittal will be placed by the Iowa DOT assigned preliminary bridge engineer in the following folder:

W:\Highway\Bridge\PrelimSection\Scour\Scour_Management_Plan_Work\2B_AppB_BridgeSpecificProvisions\Active\[FHWANO]pending

Once Preliminary Bridge is notified that the detour is being constructed, the Monitoring Plan, TSL and Roadway plan sheets will be updated to the as-built versions, and the package transmitted to Bridge Watch for initiation of alerts.

3.16 Resiliency/Climate Change

{Text for this article will be added in the future.}

TABLE OF CONTENTS ~

COMMENTARY ON PRELIMINARY DESIGN OF BRIDGES

C3 Preliminary
- C3.1 General
  - C3.1.1 Policy overview
  - C3.1.2 Design information
  - C3.1.3 Definitions
  - C3.1.4 Abbreviations and notation
  - C3.1.5 References
    - C3.1.5.1 Direct
    - C3.1.5.2 Indirect
- C3.2 Bridges
  - C3.2.1 Identification numbers
  - C3.2.2 Stream and river crossings
    - C3.2.2.1 Hydrology
    - C3.2.2.2 Hydraulics
    - C3.2.2.3 Backwater
    - C3.2.2.4 Freeboard
    - C3.2.2.5 Road grade overflow
    - C3.2.2.6 Streambank protection
    - C3.2.2.7 Scour
      - C3.2.2.7.1 Types
      - C3.2.2.7.2 Design conditions
      - C3.2.2.7.3 Evaluating existing structures
      - C3.2.2.7.4 Depth estimates
      - C3.2.2.7.5 Countermeasures
      - C3.2.2.7.5.1 Riprap at abutments
      - C3.2.2.7.5.2 Riprap at piers
      - C3.2.2.7.5.3 Wing dikes
      - C3.2.2.7.6 Coding
    - C3.2.2.8 Riverine Infrastructure Database
    - C3.2.2.9 Datum Correlation
    - C3.2.2.10 Stream Stability
      - C3.2.2.10.1 Hydraulic Grade Line and Streambed Profile Determination
      - C3.2.2.10.2 Grade Control Structures
    - C3.2.2.11 State Water Trail and Paddling Routes
- C3.3 Highway crossings
  - C3.3.1 Clearances
  - C3.3.2 Ditch drainage
- C3.4 Railroad crossings
  - C3.4.1 BNSF and UP overhead structures
    - C3.4.1.1 Vertical clearance
    - C3.4.1.2 Horizontal clearance
    - C3.4.1.3 Piers
    - C3.4.1.4 Bridge berms
    - C3.4.1.5 Drainage
    - C3.4.1.6 Barrier rails and fencing
  - C3.4.2 Non-BNSF and -UP overhead structures
    - C3.4.2.1 Vertical clearance
    - C3.4.2.2 Horizontal clearance
    - C3.4.2.3 Piers
    - C3.4.2.4 Bridge berms
    - C3.4.2.5 Drainage
    - C3.4.2.6 Barrier rails and fencing

C3.4.3 Underpass structures
C3.4.4 Submittals
C3.5 Pedestrian and shared use path crossings
C3.6 Superstructures
C3.6.1 Type and span
C3.6.1.1 CCS J-series
C3.6.1.2 PPCB
C3.6.1.3 CWPG
C3.6.1.4 Cable/Arch/Truss
C3.6.2 Width
C3.6.2.1 Highway
C3.6.2.2 Sidewalk, separated path, and bicycle lane
C3.6.3 Horizontal curve
C3.6.3.1 Spiral curve
C3.6.4 Alignment and profile grade
C3.6.5 Cross slope drainage
C3.6.6 Deck drainage
C3.6.7 Bridge inspection/maintenance accessibility
C3.6.8 Railings
C3.6.8.1 Barrier Rail End Treatments
C3.6.8.2 Separation Rail
C3.6.9 Staging
C3.7 Substructures
C3.7.1 Skew
C3.7.2 Abutments
C3.7.3 Berms
C3.7.3.1 Slope
C3.7.3.2 Toe offset
C3.7.3.3 Berm slope location table
C3.7.3.4 Recoverable berm location table
C3.7.3.5 Slope protection
C3.7.3.6 Grading control points
C3.7.3.7 Mechanically Stabilized Earth (MSE) Walls adjacent to abutments
C3.7.4 Piers and pier footings
C3.7.5 Wing walls
C3.7.6 Foundation Conflicts
C3.8 Cost estimates
C3.9 Type, Size, and Location (TS&L) plans
C3.10 Permits and approvals
C3.10.1 Waterway
C3.10.2 Railroad
C3.10.3 Highway
C3.11 Forms
C3.12 Noise walls
C3.13 Submittals
C3.14 Zone of Intrusion
C3.15 Temporary Bridges
C3.16 Resiliency/Climate Change

C3 Preliminary

C3.1 General

C3.1.1 Policy overview

C3.1.2 Design information

C3.1.3 Definitions

C3.1.4 Abbreviations and notation

C3.1.5 References

C3.1.5.1 Direct

C3.1.5.2 Indirect

C3.2 Bridges

Example TSL development report

PRELIMINARY BRIDGE TSL DEVELOPMENT REPORT Date:

I-35 (S.B.) & I-80 (W.B.) over U.S. 6 (Hickman Road)
Project No. IM-080-3(267)125--13-77
PIN: 15-77-080-060
File No. 32251
Polk County – Design No. 0625
240'-0 x 88'-4 Welded Plate Girder (WPG)
Bridge Location: U.S. 6/Hickman Road
Interchange Station 419+51.02, 42.00' Lt.
(¡ I-35/80)
Maintenance No. 7725.1L080
FHWA No. 41311
Work Description: Bridge Replacement – WPG Bridge
Prepared for: Iowa DOT
Prepared by: Consultant

TSL DEVELOPMENT DETAILS

1. BDM 3.3 – Highway crossings
    a. Vertical clearance, for the proposed U.S. 6 DDI, was checked to ensure that the vertical clearance met or exceeded the required 16'-6" clearance over primary highways.
    b. Vertical clearance, to existing U.S. 6, was checked to ensure that the vertical clearance met or exceeded 14'-6" for the temporary condition during staged construction.
    c. Vertical clearance within the horizontal clear zone was checked to ensure that the vertical clearance met or exceeded 14'-6".
    d. The bridge is a single span structure with abutments placed behind MSE walls.

   e. Horizontal clearance to the MSE walls is 15'-0" from the back of curb. This 15'-0" of clearance will provide for snow storage when necessary.
   f. Pedestrian facilities under the bridge are currently in development. A shared use path alignment/location is currently under development. A sidewalk may also be included under the bridge. The sidewalk alignment/location/need are currently under development.
2. The roadway profile for I-35/80 is in a crest curve at the bridge location.
3. BDM 3.6.1.7 – Superstructure – CWPG
   a. The bridge length was determined by establishing the location of the MSE walls to provide the required clear zone. To reduce the length of the bridge, MSE walls are planned to retain the earth fill in front of the abutments and wrap around to retain approach fill.
   b. A single span 240'-0 x 88'-4 WPG bridge with a 2° skew (R.A.) was selected for the site.
   c. The final bridge roadway width consists of a 16'-4 inside shoulder, five 12'-0 lanes and a 12'-0 exterior shoulder as indicated in the approved Concept Statement.
   d. The proposed superstructure utilizes a steel girder with a depth of 6'-10, plus an 8.5" concrete deck; girders are spaced at 7'-1 5/16" and will likely utilize two field-bolted splices. The depth does not meet the traditional minimum depth shown in AASHTO LRFD Bridge Design Specifications, 8th Edition Table 2.5.2.6.3-1. However, a preliminary design of the girder indicates that all strength and serviceability requirements can be achieved. A shallower than traditional minimum depth steel girder at a tighter spacing was utilized to minimize the profile grade raise of I-35/80.
   e. The bridge staging and constructability was reviewed among the design team, DOT staff, and at an Iowa DOT / AGC of Iowa Structures Industry meeting. It was determined that the single-span bridge, with multiple bolted field splice locations, is feasible to build. Traffic can be fully maintained on U.S. 6 (Hickman Road) with small closure windows for bridge demolition and setting girders.
4. BDM 3.6.8 – Barrier Rails
   a. The barrier rails for all interstate mainline bridges shall require a TL-5 railing.
   b. Barrier rails for this project will be the TSS TL-5 rails.
5. BDM 3.6.9 – Staging
   a. The bridge will be constructed in two stages. The exterior (east side) of the bridge will be built in stage 1 and the median side of the bridge will be built in stage 2. Each stage will allow for 3 lanes of traffic with 11' lane widths. A portion of the existing bridge will be removed, and traffic will be maintained on the remaining existing bridge during stage 1. Traffic during stage 2 will shift to the new bridge previously constructed in stage 1. During stage 2, the remaining existing bridge will be demolished, and the remaining proposed bridge will be constructed.
   b. Temporary shoring will be required between the new MSE walls and the existing bridge embankment.
6. BDM 3.7.1 – Substructures – Skew
   a. The bridge abutments and MSE walls will be placed at a skew of 2° (R.A.) to match the skew of U.S. 6 (Hickman Road) to I-35/80.
7. BDM 3.7.2 – Abutments
   a. Semi-integral abutments will be placed approximately 1.5 feet behind the MSE walls.
   b. There will be two rows of vertical piles supporting the semi-integral abutments.
   c. A dead man will be installed behind the abutments to anchor the abutments and resist the longitudinal forces since battered piles are not feasible behind MSE walls.
8. BDM 3.7.3.7 – Mechanically Stabilized Earth (MSE) Walls adjacent to abutments
   a. The clear zone within the DDI is 10 feet from the edge of traveled way.
   b. The MSE wall is located outside of the 10-foot clear zone with deep foundations.
9. BDM 3.7.5 – Wing walls
   a. The abutments for the bridge will not have wing walls. The end of the bridge abutment will

abut the MSE wall.

b. The MSE wall is needed to narrow the bridge embankment and allow the ramps to be closer to I-35/80 mainline.

10. BDM 3.7.6 – Foundation Conflicts
    a. The bridge abutments and MSE walls are located behind the existing abutments on each end of the bridge. There are no foundation conflicts with proposed abutment foundations.
    b. The removal of existing foundations will be developed during Final Design to determine removal extents to prevent interference to roadway construction.
11. Bridge aesthetics will be incorporated during Final Design. Discussions with team members and communities is ongoing as aesthetic features are currently being developed.
12. Under bridge deck lighting will be investigated during Final Design. Under bridge deck lighting will also be considered as a part of the aesthetic design for the bridge.

C3.2.1 Identification numbers

C3.2.2 Stream and river crossings

A certified Hydrology and Hydraulics (H&H) Report in pdf file format shall be prepared to document the design flowrates selected, design criteria, and proposed structure hydraulic design. A typical H&H Report might include the following information. More or less information may be needed depending on the complexity of the site.

- Purpose of Study and Introduction
- Site Description
- Existing conditions (ex: structure type, size, span arrangements, superstructure depth, low beam; low roadway location and elevation; review and document any existing scour, erosion, or channel shifting). History of overtopping at a water crossing site can be requested through the Iowa DOT District Maintenance Engineer.
- Document project datum, Iowa RCS Zone and datum correlations (LiDAR, existing plans, etc.)
- Listing of applicable hydraulic design and regulatory criteria. Identify required permits/approvals
  - Iowa DOT BDM policy
  - Iowa DNR Flood Plain Permit requirements
  - FEMA requirements (identify the FIRM Zone, site location panel number and date, document if there is a flood profile in the FIS and if no-rise is required)
  - Drainage District – slope, channel geometry, flowline requirements
  - Determination of upstream damage potential, and identification of possible high damage potential structures
- Identify needed coordination with DOT bureaus or outside entities that may affect the proposed preliminary design (Ex. DOT Location/Environment Bureau, Drainage district, US Coast Guard, etc.)
- Hydrology – Determination of recommended design discharges
  - Drainage Area (DA). Include StreamStats report with basin characteristics. Note if DA edits were needed.
  - AEPD spreadsheet, gage information (document if not applicable), USGS flood report excerpts
  - Proposed design discharges to be utilized for evaluating compliance with DOT and DNR Criteria. Include rationale for recommended method based on the DOT policy guidance.
  - The FIS published Q100, known as the base flood, may be different than the selected design discharge Q100 if a different methodology was used. The base flood is only utilized to evaluate compliance with FEMA requirements.
  - If an RIDB dataset is needed, a full range of discharges will need to be analyzed to create the stage/discharge relationships.
- Hydraulic Design- Verify compliance with Hydraulic Criteria

        - DOT policy and DNR requirements- design discharges shall be used to analyze backwater, freeboard, average bridge velocity, scour, level of service for overtopping, etc.
        - FEMA requirements –analysis based on the FIS base flood. It is most commonly used to document a proposed no-rise as compared to existing conditions, or for preparing an FIS map revision. The base flood may be higher or lower than the project design Q100.
    - Review of the site morphology (review historical maintenance reports, existing bridge plans, aerial photography, etc.). Document the estimated future degradation to be considered in the scour analysis.
    - Document the streambed profile, design streambed elevation, and methods for determination [BDM 3.2.2.10]
    - Model selection for hydraulic analysis
        - Document the hydraulic model and version/date used for the analysis. Include rationale for hydraulic model selection. If a site is within a detailed FIS, use of the FEMA model may be preferred.
        - Document input data, boundary conditions and assumptions.
        - For sites with shallow bedrock, follow guidance within BDM 3.7.4 regarding assumed pier widths for hydraulic analysis
    - Proposed structure and site features
        - Bridge size, type, span arrangements, wing dikes (when applicable)
        - Calculation breakdown from profile grade to operational and channel low beam
        - Note whether the roadway profile grade will have a proposed change or stay the same
        - Low roadway overtop location and condition (any change from existing?)
        - Overflow structures, if so, what is the type, size, and location
        - Proposed revetment recommendations for bridges (class of revetment, thickness, locations/extent)
    - Summary of hydraulic results
        - Identify any hydraulic model calibration and data utilized (example flood report stream profiles, on-site gage data)
        - Documentation relative to design hydraulic criteria compliance (ex: freeboard, average bridge velocity, backwater
        - Documentation relative to FEMA or other criteria compliance (ex: no-rise)
    - Describe any necessary actions or mitigations required for non-compliance with design policy or regulatory criteria (Ex: DNR variance request, drainage/flowage easement needed)
    - Provide a summary of scour calculations (clear water vs. live bed) and results (contraction scour, pier scour, and degradation components and total scour depth/elevation). Review and document the potential for abutment scour and recommended mitigation. Review the proposed structure to ensure global effective slope stability or provide mitigation/protection for an extreme event.

C3.2.2.1 Hydrology

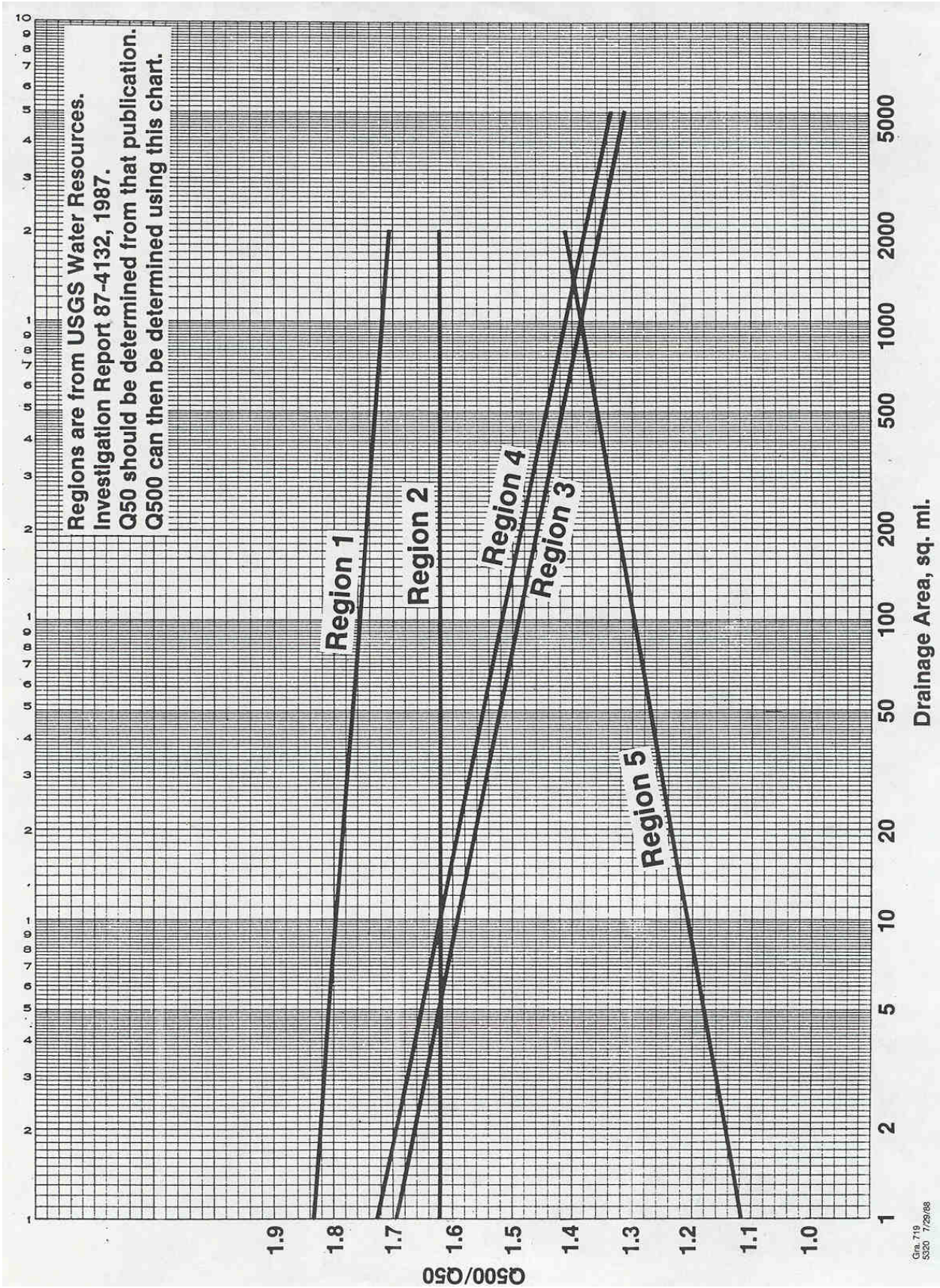
Regions are from USGS Water Resources.
Investigation Report 87-4132, 1987.
Q50 should be determined from that publication.
Q500 can then be determined using this chart.
Region 1
Region 2
Region 3
Region 4
Region 5
Q500/Q50
1.9
1.8
1.7
1.6
1.5
1.4
1.3
1.2
1.1
1.0
Drainage Area, sq. mi.
1
2
5
10
20
50
100
200
500
1000
2000
5000
Gra 719
5320 7/29/88

Table 1. Chronology of U.S. Geological Survey reports documenting flood profiles of streams in Iowa, 1963-2012.

Report number	Report citation	Report URL
1	Myers, R.E. 1963, Floods at Des Moines, Iowa: U.S. Geological Survey Hydrologic Investigations Atlas HA-53, 1 sheet, scale 1:24,000, included in Open-File Report 67-37 (listed below).	https://doi.org/10.3133/ofr6737
2	Schwob, H.H., 1963, Cedar River Basin floods: Ames, Iowa Department of Transportation, Iowa Highway Research Board Bulletin No. 27, 59 p.	https://pubs.er.usgs.gov/publication/70168617
3	Schwob, H.H., and Meyers, R.E., 1965, The 1965 Mississippi River flood in Iowa: Iowa City, U.S. Geological Survey Open-File Report 65-145, 46 p. Sponsored cooperatively by the Iowa Geological Survey.	https://doi.org/10.3133/ofr65145
4	Schwob, H.H., 1966b, Little Sioux River Basin floods: U.S. Geological Survey Open-File Report 67-196, 60 p.	https://doi.org/10.3133/ofr67196
5	Carpenter, P.J., and Appel, D.H., 1966, Water-surface profiles of Raccoon River at Des Moines, Iowa: U.S. Geological Survey Open-File Report 67-37, 12p., includes Hydrologic Investigations Atlas HA-53 (listed above). Sponsored cooperatively by the Iowa Institute of Hydraulic Research and City of Des Moines.	https://doi.org/10.3133/ofr6737
6	Schwob, H.H., 1967, Floods on Otter Creek in Linn County, Iowa: U.S. Geological Survey Open-File Report 67-195, 22 p. Sponsored cooperatively by Linn County, Iowa.	https://doi.org/10.3133/ofr67195
7	Carpenter, P.J., 1967, Floods in Rock River Basin: U.S. Geological Survey Open-File Report 67-36, 28 p.	https://doi.org/10.3133/ofr6736
8	Schwob, H.H., 1968, Flood of June 7, 1967, in the Wapsinonoc Creek Basin, Iowa: U.S. Geological Survey Open-File Report 68-b, 21 p.	https://doi.org/10.3133/ofr68b
9	U.S. Geological Survey, 1968, Flood profile study, Squaw Creek, Linn County, Iowa, U.S. Geological Survey Open-File Report 68-302, 13 p. Sponsored cooperatively by the City of Cedar Rapids, Iowa.	https://doi.org/10.3133/ofr68302
10	Schwob, H.H., 1970d, Floods in the upper Des Moines River Basin, Iowa: U.S. Geological Survey Open-File Report 70-296, 49 p.	https://doi.org/10.3133/ofr70296
11	Schwob, H.H., 1970c, Flood profile study, Morgan Creek, Linn County, Iowa: U.S. Geological Survey Open-File Report 70-295, 16 p. Sponsored cooperatively by the City of Cedar Rapids, Iowa.	https://doi.org/10.3133/ofr70295
12	Schwob, H.H., 1970a, Flood of March 3, 1970, on Old Mans Creek, Johnson County, Iowa: U.S. Geological Survey Open-File Report 70-293, 9 p.	https://doi.org/10.3133/ofr70293
13	Schwob, H.H., 1970b, Flood profile study, Hoosier Creek, Linn County, Iowa: U.S. Geological Survey Open-File Report 70-294, 18 p. Sponsored cooperatively by Linn County, Iowa.	https://doi.org/10.3133/ofr70294
14	Schwob, H.H., 1971, Floods in the Wapsipinicon River Basin, Iowa: U.S. Geological Survey Open-File Report (unnumbered), 52 p.	https://doi.org/10.3133/70006260

Table 1. Chronology of U.S. Geological Survey reports documenting flood profiles of streams in Iowa, 1963-2012.

15	Heinitz, A.J., 1973a, Floods in the Iowa River Basin upstream from Coralville Lake, Iowa: U.S. Geological Survey Open-File Report 73-106, 75 p.	https://doi.org/10.3133/ofr73106
16	Heinitz, A.J., 1973b, Floods in the Rock River Basin, Iowa: U.S. Geological Survey Open-File Report 74-1047, 74 p.	https://doi.org/10.3133/ofr741047
17	Lara, O.G., and Heinitz, A.J., 1976, Flood of June 27, 1975, in city of Ames, Iowa: U.S. Geological Survey Open-File Report 76-728, 56 p.	https://doi.org/10.3133/ofr76728
18	Heinitz, A.J., 1977, Floods in the Big Creek Basin, Linn County, Iowa, U.S. Geological Survey Open-File Report 77-209, 35 p. Sponsored cooperatively by Linn County, Iowa.	https://doi.org/10.3133/ofr77209
19	Heinitz, A.J., and Wiitala, S.W., 1978, Floods in the Skunk River Basin, Iowa: U.S. Geological Survey Open-File Report 79-272, 80 p.	https://doi.org/10.3133/ofr79272
20	Heinitz, A.J., 1979, Supplement to floods in the upper Des Moines River Basin, Iowa: U.S. Geological Survey Open-File Report 79-1486, 6 p.	https://doi.org/10.3133/ofr791486
21	Heinitiz, A.J., 1980, Floods in the Raccoon River Basin, Iowa: U.S. Geological Survey Open-File Report 80-162, 110 p.	https://doi.org/10.3133/ofr80162
22	Heinitz, A.J., and Riddle, D.E., 1981, Floods in the English River Basin, Iowa: U.S. Geological Survey Open-File Report 81-67, 61 p.	https://doi.org/10.3133/ofr8167
23	Heinitz, A.J., 1986a, Floods in south-central Iowa: U.S. Geological Survey Open-File Report 85-100, 95 p.	https://doi.org/10.3133/ofr85100
24	Heinitiz, A.J., 1986b, Floods of June-July, 1982, in Iowa: U.S. Geological Survey Open-File Report 85-151, 18 p.	https://doi.org/10.3133/ofr85151
25	Heinitz, A.J., 1986c, Floods in the Floyd River Basin, Iowa: U.S. Geological Survey Open-File Report 86-476, 61 p.	https://doi.org/10.3133/ofr86476
26	Eash, D.A., and Heinitz, A.J., 1991, Floods in the Nishnabotna River Basin, Iowa: U.S. Geological Survey Open-File Report 91-171, 118 p.	https://doi.org/10.3133/ofr91171
27	Baebenroth, R.W., and Schaap, B.D., 1992, Floods of 1986 and 1990 in the Raccoon River Basin, west-central Iowa: U.S. Geological Survey Open-File Report 92-94, 144 p.	https://doi.org/10.3133/ofr9294
28	Barnes, K.K., and Eash, D.A., 1994, Flood of June 17, 1990, in the Clear Creek Basin, east-central Iowa: U.S. Geological Survey Open-File Report 94-78, 21 p.	https://doi.org/10.3133/ofr9478
29	Einhellig, R.F., and Eash, D.A., 1996, Floods of June 17, 1990, and July 9, 1993, along Squaw Creek and the South Skunk River in Ames, Iowa, and vicinity: U.S. Geological Survey Open-File Report 96-249, 34 p.	https://doi.org/10.3133/ofr96249
30	Eash, D.A., 1996b, Flood of May 19, 1990, along Perry Creek in Plymouth and Woodbury Counties, Iowa: U.S. Geological Survey Open-File Report 96-476, 39 p.	https://doi.org/10.3133/ofr96476
31	Eash, D.A., and Koppensteiner, B.A., 1996, Floods of July 12, 1972, March 19, 1979, and June 15, 1991, in the Turkey River Basin, northeast Iowa: U.S. Geological Survey Open-File Report 96-560, 55 p.	https://doi.org/10.3133/ofr96560
32	Eash, D.A., and Koppensteiner, B.A., 1997a, Floods of September 15-16, 1992, in the Thompson, Weldon, and Chariton River Basins, south-central Iowa: U.S. Geological Survey Open-File Report 97-122, 68 p.	https://doi.org/10.3133/ofr97122

Table 1. Chronology of U.S. Geological Survey reports documenting flood profiles of streams in Iowa, 1963-2012.

33	Eash, D.A., and Koppensteiner, B.A., 1997b, Flood of July 9-11, 1993, in the Raccoon River Basin, west-central Iowa: U.S. Geological Survey Open-File Report 97-557, 117p.	https://doi.org/10.3133/ofr97557
34	Schaap, B.D., and Harvey, C.A., 1995, Delineation of flooding within the upper Mississippi River Basin, 1993--Flood of June 29-September 18, 1993, in Iowa City and vicinity, Iowa: U.S. Geological Survey Hydrologic Investigations Atlas HA735-B, 1 sheet, scale 1:24,000.	https://doi.org/10.3133/ha735B
35	Schaap, B.D., 1996a, Delineation of flooding within the upper Mississippi River Basin--Flood of June 19-July 31, 1993, in Davenport, Iowa, and vicinity: U.S. Geological Survey Hydrologic Investigations Atlas HA735-C, 1 sheet, scale 1:24,000.	https://doi.org/10.3133/ha735C
36	Schaap, B.D., 1996b, Delineation of flooding within the upper Mississippi River Basin--Flood of June 18 through August 4, 1993, in Des Moines and vicinity, Iowa: U.S. Geological Survey Hydrologic Investigations Atlas HA735-D, 2 sheets, scale 1:24,000.	https://doi.org/10.3133/ha735D
37	Fischer, E.E., 1999, Flood of June 15-17, 1998, Nishnabotna and East Nishnabotna Rivers, southwest Iowa: U.S. Geological Survey Open-File Report 99-70, 15 p.	https://doi.org/10.3133/ofr9970
38	Ballew, J.L., and Fischer, E.E., 2000, Floods of May 17-20, 1999, in the Volga and Wapsipinicon River Basins, northeast Iowa: U.S. Geological Survey Open-File Report 00-237, 36 p.	https://doi.org/10.3133/ofr00237
39	Ballew, J.L., and Eash D.A., 2001, Floods of July 19-25, 1999, in the Wapsipinicon and Cedar River Basins, northeast Iowa: U.S. Geological Survey Open-File Report 01-13, 45 p.	https://doi.org/10.3133/ofr0113
40	Eash, D.A., 2004a, Flood of June 4, 2002, in the Indian Creek Basin, Linn County, Iowa: U.S. Geological Survey Open-File Report 2004-1074, 31 p.	https://doi.org/10.3133/ofr20041074
41	Eash, D.A., 2004b, Flood of June 4-5, 2002, in the Maquoketa River Basin, east-central Iowa: U.S. Geological Survey Open-File Report 2004-1250, 29 p.	https://doi.org/10.3133/ofr20041250
42	Eash, D.A., 2006, Flood of May 23, 2004, in the Turkey and Maquoketa River Basins, Northeast Iowa: U.S. Geological Survey Open-File Report 2006-1067, 35 p.	https://doi.org/10.3133/ofr20061067
43	Fischer, E.E., and Eash, D.A., 2008, Flood of May 6, 2007, Willow Creek, West-Central Iowa: U.S. Geological Survey Open-File Report 2008-1229, 11 p. with appendix.	https://doi.org/10.3133/ofr20081229
44	Fischer, E.E., and Eash, D.A., 2010, Flood of June 8-9, 2008, Upper Iowa River, northeast Iowa: U.S. Geological Survey Open-File Report 2010-1087, 17 p. with appendix.	https://doi.org/10.3133/ofr20101087
45	Linhart, S.M., and Eash, D.A., 2010, Floods of May 30 to June 15, 2008, in the Iowa and Cedar River Basins, eastern Iowa: U.S. Geological Survey Open-File Report 2010-1190, 99 p. with appendixes.	https://doi.org/10.3133/ofr20101190
46	Eash, D.A., 2012, Floods of July 23-26, 2010, in the Little Maquoketa River and Maquoketa River Basins, northeast Iowa: U.S. Geological Survey Open-File Report 2011-1301, 45 p. with appendix.	https://doi.org/10.3133/ofr20111301

Table 1. Chronology of U.S. Geological Survey reports documenting flood profiles of streams in Iowa, 1963-2012.

47	Barnes, K.K., and Eash, D.A., 2012, Flood of August 11-16, 2010, in the South Skunk River Basin, central and southeast Iowa: U.S. Geological Survey Open-File Report 2012-1202, 27 p. with appendix.	https://doi.org/10.3133/ofr20121202
48	Linhart, S.M., and O'Shea, P.S., 2018, Flood of August 24–25, 2016, Upper Iowa River and Turkey River, northeastern Iowa: U.S. Geological Survey Open-File Report 2017–1128, 20 p., with appendix.	https://doi.org/10.3133/ofr20171128
49	O'Shea, P.S., Vegrzyn, J.C., and Barnes, K.K., 2021, Flood of June 30–July 1, 2018, in the Fourmile Creek Basin, near Ankeny, Iowa: U.S. Geological Survey Open-File Report 2021–1044, 18 p.	https://doi.org/10.3133/ofr20211044
50	O'Shea, P.S., Wilson, J.L., Vegrzyn, J.C., and Barnes, K.K., 2022, Floods of June 21–July 1, 2018, in the Floyd River and Little Sioux River Basins, northwestern Iowa: U.S. Geological Survey Open-File Report 2022–1015, 35 p.	https://doi.org/10.3133/ofr20221015

C3.2.2.2 Hydraulics

C3.2.2.3 Backwater

C3.2.2.4 Freeboard

C3.2.2.5 Road grade overflow

C3.2.2.6 Streambank protection

Bank Toe Protection Example

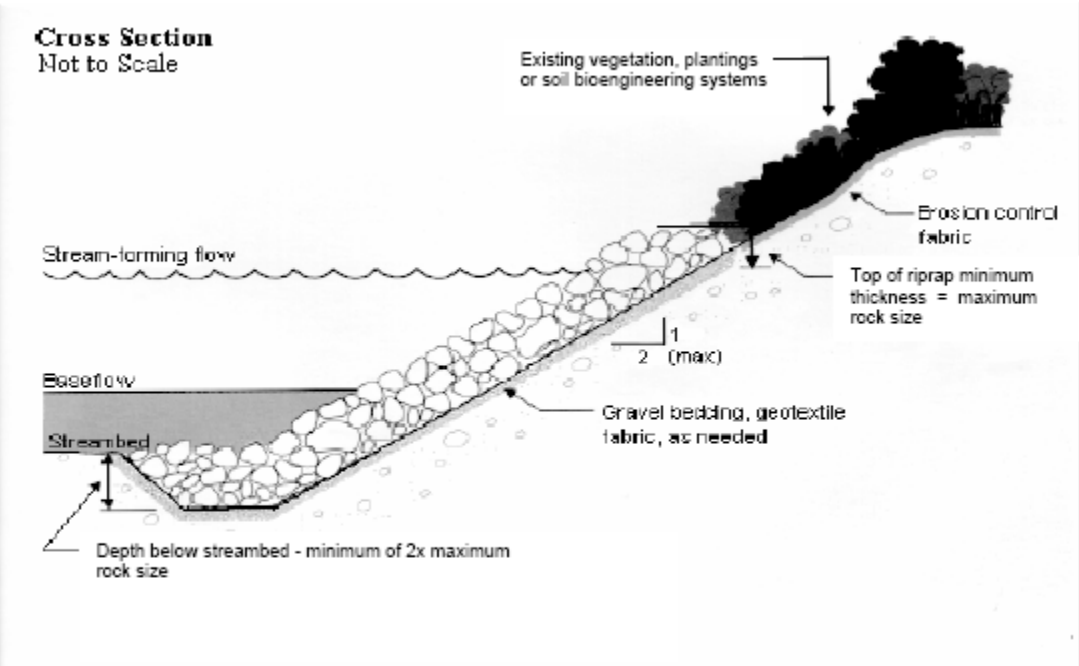

Figure 24. Cross-sectional view of riprap placement on the graded slope of a Streambank.

C3.2.2.7 Scour

Introduction

The most common cause of bridge failures in the nation is flooding, with bridge scour being the most common type of flood damage. Bridge scour is a complicated process and provides challenges to engineering analysis. Because of public safety and high replacement and repair costs, the need exists to evaluate or improve current design and maintenance practices concerning bridge foundations.

The objective in this document is to detail three items:

1. Factors that affect scour.
2. Recommendations to reduce or prevent scour effects on existing and proposed bridges.
3. Methods to estimate scour for existing and proposed structures.

Definition

A basic definition of scour is the result of erosive action of moving water as it excavates and carries away material from a streambed and banks. There are two types of scour:

1. General scour - the loss of material from most or all the bed and banks, usually caused by the road embankment encroaching onto the flood plain with resulting contraction of the flood flow (often called contraction scour).
2. Local scour – the loss of material around piers, abutments, spur dikes and embankments.

There are two conditions for contraction and local scour: clear-water and live-bed. Clear-water scour occurs when there is little to no movement of the bed material of the stream upstream of the crossing. Typical situations include most overflow bridges, coarse bed material streams, and flat gradient streams during low flow. Live-bed scour occurs when velocities are high enough to move the bed material upstream of the crossing. Most Iowa streams and rivers experience live-bed scour.

Streambed degradation, such as in the Western Iowa loess region, is considered in some documents to be scour. Even though degradation can affect structural stability like local or general scour does, the causes of degradation are of a different nature, and it will not be discussed in detail in this document.

The effects of scour are a complex problem involving geotechnical, hydraulic, and structural concerns, so decisions concerning scour should involve engineers in each of these disciplines.

Design guidelines and considerations

Numerous factors affect the stability of the bed and banks of a stream and are discussed below with some guidelines and considerations.

1. Soils

Soils with any combination of sand or silt have greater potential for scour: sand, silt, sandy silt, sandy silty clay, etc. As a general rule, according to IDOT's Soils Design Unit, soils which have a blow count of ten or less are particularly susceptible.

Excessive loss of pile bearing due to scour is one cause for bridge damage or failure. However, perhaps a more common cause of failure is soil instability associated with the road embankment and bridge berm. Often a bridge berm or fill behind a high abutment has minimal factor of safety for stability. If this safety factor is reduced due to scour at the toe of the embankment, the soil may become unstable resulting in a slip failure. Damage to an abutment, pier or approach fill is a possible outcome.

For replacement structures, designing flatter berm slopes and/or placing the abutments farther from the channel will provide a greater safety factor. Then, when scour does occur, the embankment will more likely remain stable. For existing structures, protection of the berm, especially the toe, may be necessary.

2. Substructure

Generally, wider and longer piers have greater scour potential. Deeper footings and longer piles are more stable at greater scour depths. Spread footings should be used only on material highly resistant to scour such as limestone and some shales.

To maintain the integrity of the structure, do not allow scour to reduce pile bearing below a desirable safety factor that is selected by the structural or geotechnical engineer. Designing for this minimum safety factor may require designing longer piles for new bridges. For existing structures, protection of the piles may be necessary to maintain the safety factor.

New bridges should have sufficient length so that the abutments do not encroach on the channel but placed as far back from the streambank as practical. Vertical wall abutments (high abutments) have a greater potential for general and local scour as compared to the spill-through type (integral or stub abutments).

3. Flood discharge

In the publication "Evaluating Scour at Bridges, Fifth Edition", Hydraulic Engineering Circular No. 18 (HEC-18), the FHWA recommends using scour flood frequencies that are larger than the hydraulic design flood frequencies. The rationale for this is that hydraulic design involves backwater and ensures that the bridge size will be adequate under normal flood conditions. In scour design, a higher discharge is used to ensure that the bridge will remain stable and will not fail or suffer severe damage during extreme flood events. Also, there is a reasonably high likelihood that the hydraulic design flood will be exceeded during the service life of the bridge.

Iowa DOT recommends using the Q_{200}or lesser discharge for scour analysis, depending on which results in the most severe scour conditions. Usually the overtopping flood results in the worst scour, so check this flood (if less than the Q_{200}) and the Q_{200}.

FHWA also recommends checking scour conditions for a superflood, such as a Q_{500}. If Q_{500} data is not available, HEC-18 recommends using 1.7 X Q_{100}. The safety factors for the bridge should remain above 1.0 under this flood condition. Similar to that mentioned above, $Q_{overtopping}$ may be the worst-case flood and should be used if it is less than Q_{500}.

4. Interaction between road and flood plain

A highly skewed river crossing provides a less hydraulically efficient bridge opening and therefore has a greater contraction scour potential. Also, a high ratio of overbank flow to main channel flow will result in a greater contraction scour potential. For these situations, scour can be reduced by using wing dikes and/or riprap.

Road grade overflow or overflow structures may provide relief and reduce scour potential for the main channel bridge.

5. Interaction between piers and flood flow

The width, length and type of pier (e.g., pile bents, "tee" piers) all have an effect on local scour. Closely spaced piles in a pile bent pier can act similar to a solid wall. The angle of attack of flood flow to the pier can also significantly increase scour if this angle changes due to channel meandering during the life of the bridge. For example, if the angle of attack changes from 0° to 15°, the pier scour approximately doubles. The stream's history of and future potential for meandering should be examined.

6. Debris and ice

Visual observation can be made and maintenance records can be checked to determine the history of debris and ice on the stream. Debris and ice can snag on the piers or superstructure, placing additional stresses on the bridge as well as promoting local scour. This scour can sometimes be quite significant although difficult to estimate. Therefore, for new designs, give consideration to raising the low superstructure above the low road grade elevation. This will allow hydraulic relief if the bridge opening becomes clogged.

Estimating scour

Procedures for estimating scour have been researched in the past 40 years in an attempt to develop reliable prediction equations. Some of these equations give reliable results, others do not. The Federal Highway Administration has attempted to find the best equations and published them in HEC-18.

HEC-18 contains equations for contraction scour, abutment scour and pier scour. The contraction scour equations are the best available equations of their type and sometimes provide reliable estimates, although these estimates still need to be evaluated considering soil types, site scour history, etc. The abutment scour equations frequently give questionable estimates. Because of comments similar to this from various states, FHWA is conducting additional research to develop new methods. At this time, IDOT recommends not using FHWA's abutment scour equations or, at most, use them with caution. However, be aware that abutment scour can occur.

Concerning pier scour, the equation in HEC-18 generally gives reliable results. However, a much simpler method that gives very similar results is found in Iowa Highway Research Board's Bulletin No. 4, “Scour Around Bridge Piers and Abutments,” by Emmett M. Laursen and Arthur Toch, May 1956. This method for estimating pier scour can be used in most cases instead of the methods in HEC-18.

1. Contraction scour estimation

See Chapter 4 of HEC-18 for detailed instructions on how to calculate contraction scour. To help explain this chapter, there are two determinations that must be made when estimating contraction scour:

- The appropriate case of contraction scour that depends on the flow interaction of the bridge to the channel and floodplain. There are four of these cases. See the figures later in this document for graphical illustrations of these cases.
- The appropriate sediment transport condition. There are two of these conditions and equations (live-bed and clear-water) that can occur in any of the four cases mentioned above.

Both determinations are explained below.

Four cases of contraction scour

Case 1 is overbank flow being forced back into the main channel due to the road fill. The majority of bridges in Iowa will be Case 1. There are three variations to Case 1, depending on the location of the abutments or abutment berms compared to the channel:

> **Case 1a** is normally used when the river channel width becomes narrower due to the bridge abutments (or berms) projecting into the channel.
>
> **Case 1b** does not involve any contraction of the channel itself, but the overbank flow area is completely obstructed by the embankment. In other words, the abutments or abutment berms are on the channel bank.
>
> **Case 1c** is when the abutments or abutment berms are set back from the channel. This case is more complex because there is both main channel flow and overbank flow in the bridge opening. Therefore, refer to discussion in Section 4.3.4 of HEC-18. More hydraulic analysis may be needed than in Cases 1a and 1b (such as WSPRO) to determine the distribution of flow in the bridge opening, i.e., what is the discharge in the main channel (Q_2) and the discharge in the overbank under the bridge ($Q_{overbank2}$).

Most Case 1 streams in Iowa will have live-bed scour. However, if the streambed material has particles larger than a sand classification, calculate V_c (see below) to determine if clear-water scour will occur instead of live-bed scour.

Case 2 is when the stream has no overbank flow. This case will be common in Western Iowa streams that are severely degraded.

Case 3 is an overflow (relief) bridge with no bed material transport, so use the clear-water scour equations. Hydraulic analysis (e.g., using WSPRO) is needed to determine the flood plain width associated with the relief opening and to determine the total flow going through the relief bridge.

Case 4 is an overflow (relief) bridge similar to Case 3 except it does have sediment transport (live-bed scour), such as over a secondary channel on the flood plain of a larger stream. Hydraulically this case is no different than Case 1 except that analysis (e.g., using WSPRO) is needed to determine the flood plain width associated with the relief opening and the portion of the total flow going through the relief bridge.

Sediment transport conditions: Live-bed scour versus clear-water scour
Before an equation is selected to estimate contraction scour, it is necessary to determine if the flow is transporting bed material. If it is, the flow will create live-bed scour. If it is not, the flow will create clear-water scour. There are different scour equations for each of these sediment transport conditions.

Most Iowa stream channels will be live-bed. In other words, the velocities in the channel will be high enough to cause movement of the soil particles in the streambed. In order to be sure if the channel is live-bed, Chapter 2 in HEC-18 gives a simple equation to calculate the velocity needed to cause movement of the soil:

$$V_c = 10.95\ y^{0.167}\ (D_{50})^{0.33}$$

where V_c = critical velocity which will transport bed materials of size D_{50} and smaller, ft/sec.
y = depth of upstream flow, feet
D_{50} = median diameter of the bed material, feet

If the velocity in the channel is greater than V_c, then the particles will move and the stream will have live-bed scour. If the velocity in the channel is less than V_c, then the particles will not move and the stream will have clear-water scour.

Most Iowa streambeds have sand or silt which results in a very low V_c. This means that even a low flood velocity will move the particles. Therefore, most Iowa streams will have live-bed scour. For example, for a medium sand with a D_{50} of 0.0012 feet and a flow depth of 12 feet, V_c is 1.8 ft/sec. Any flood with a channel velocity higher than this will cause sediment transport and therefore create live-bed scour. Even a medium gravel streambed with D_{50} of 0.039 feet and depth of 12 feet results in V_c of 5.7 ft/sec. Again, most Iowa streams will have a channel velocity higher than this.

In summary, as a rule of thumb, if the streambed material is larger than sand, calculate V_c and compare to expected channel velocities to determine if live-bed or clear-water scour occurs. If the material is sand or smaller, assume live-bed scour occurs.

Live-bed scour
From HEC-18, the equation for live-bed scour is as follows:

$$\frac{y_2}{y_1} = \left[\frac{Q_2}{Q_1}\right]^{0.86} \left[\frac{W_1}{W_2}\right]^{k1}$$

and $y_s = y_2 - y_1$ = average scour depth, ft

where y_1 = average depth in the upstream main channel, ft
y_2 = average depth in the contracted section (i.e., in the bridge opening), ft
W_1 = top width of water in the upstream main channel, ft

W_2 = top width of water in the main channel in the contracted section (i.e., in the bridge opening), ft
Q_1 = discharge in the upstream main channel transporting sediment, cfs.
(Q_1 does not include upstream overbank flow)
Q_2 = discharge in the contracted channel (i.e., bridge opening), cfs
(For Cases 1a and 1b, Q_2 may be the total flow going through the bridge opening. For Case 1c, Q_2 is not the total flow through the bridge since there is also some overbank Q adjacent to the channel under the bridge.)
k_1 = exponent. Assume $k_1 = 0.64$ to simplify the calculations since the range for k_1 in HEC-18 Section 4.3.4 makes very little difference on calculated scour depths.

This results in the live-bed scour equation of:

$$\frac{y_2}{y_1} = \left[\frac{Q_2}{Q_1}\right]^{0.86} \left[\frac{W_1}{W_2}\right]^{0.64}$$

Simply stated, the ratio W_1/W_2 reflects contraction or expansion in the channel. The ratio Q_2/Q_1 reflects the effect of forcing overbank flow through the bridge opening.

This equation is generally used for Case 1 (when streambed consists of sand-size particles or smaller) and Cases 2 and 4. In Case 1c, the live-bed scour equation is used for the main channel contraction scour and the clear-water scour equation is used for the contraction scour near the abutment on the overbank.

Clear-water scour
From HEC-18, the equation for clear-water scour is as follows:

$$y_2 = \left[\frac{Q^2}{139\ (D_{50})^{0.67} (W_2)^2}\right]^{0.43}$$

and $y_s = y_2 - y_1$ = average scour depth, feet

where y_2 = depth in the bridge opening, ft
Q = discharge through the bridge opening or on the overbank portion of the bridge opening, cfs
D_{50}= median diameter of material in overbank, feet (see attached sediment size table from HEC-20)
W_2= top width of water in bridge opening or overbank width in bridge opening (set-back distance), feet
y_1 = upstream depth, ft

The average depths y_1 and y_2 are measured either in the channel for channel scour calculations or on the overbank for overbank/abutment-area scour calculations.

The clear-water scour equation is used for a few Case 1 bridges (when streambed particles are larger and, in Case 1c, when the abutment is set back a distance from the channel) and for all Case 3 bridges.

Summary of estimating contraction scour
- Determine which “case” is appropriate
- Determine if the channel has live-bed or clear-water scour
- Analyze the hydraulics
- Using the correct equation, estimate scour
- Evaluate the reasonableness of estimated scour

2. Abutment scour estimation

The equation given in Section 4.3.6 of HEC-18 is for the worst-case conditions. The equation will predict the maximum scour that could occur for an abutment projecting into a stream with velocities and depths upstream of the abutment similar to those in the main channel. In most cases, the equation will over-predict scour, especially the farther the abutment is from the channel. Do not calculate abutment scour at this time due to this questionable equation. Be aware, however, that scour at the abutments can occur. Site experience is very important in the engineering analysis, including known scour occurrences and settlement of approach pavement which indicates soil stability problems. It is important to note that high abutments may have up to twice the scour depths as spill-through abutments.

A conservative approach in determining effects of scour on the abutments is to assume that contraction scour is added to abutment scour when the abutment is near the channel.

Several questions should be considered for abutment stability. Is the soil scourable? What is the effect on berm stability? Are flatter berm slopes or a longer bridge needed? What is the effect on pile bearing? Are longer piles needed? Should riprap or wing dikes be used?

3. Pier scour estimation

Use "Scour Around Bridge Piers and Abutments", Emmett M. Laursen and Arthur Toch, Iowa Highway Research Board, Bulletin No. 4, 1956, for most cases.

Figure 39 in Bulletin No. 4 is the basic design curve for pier scour. IDOT determined an equation from this curve:

$$\left(\frac{y'_s}{w_p}\right) = 1.485\left(\frac{y_1}{w_p}\right)^{0.314}$$

Equation 1

where

y'_s, unfactored depth of scour, ft
y_1, unscoured depth of flow, ft
w_p, width of pier column, ft

Equation 1 is then substituted into the basic equation, resulting in Equation 2 below:

$$y_s = (K)\,(y'_s) = (K)\,(w_p)\left(\frac{y'_s}{w_p}\right)$$

$$y_s = 1.485\,(K)\,(w_p)\left(\frac{y_1}{w_p}\right)^{0.314}$$

Equation 2

where y_s is depth of scour, ft
K, a pier coefficient (either K_a or K_s),
K_s, coefficient for pier nose shape (see below). Use only if angle of attack = 0.
K_a, coefficient for angle of attack if angle is not zero (see table below).

Equation 2 should be used to calculate pier scour.

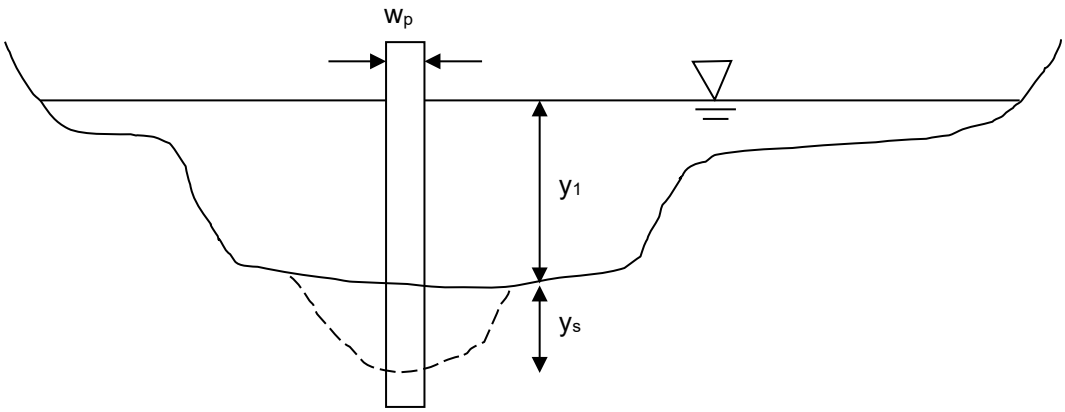

If angle of attack is zero, use one of the following values for K_s, the coefficient for the shape of the upstream nose of the pier (adapted from Bulletin No. 4). Use this K_s value in Equation 2 in place of K. These values show that the better the "rounding" of the pier nose, the lower the pier scour.

Rectangular	1.0
Semicircular	0.9
Elliptic	0.8

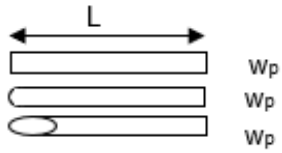

If angle of attack is not zero, use the following table adapted from Figure 39 in Bulletin No. 4 to determine K_a. In this table, L = length of pier, and w_p = width of pier. Use this K_a value in Equation 2 in place of K. The values in the table show that as the angle of attack increases, the pier scour increases dramatically. For example, for a pier L/ w_p of 8, if the angle of attack changes from 0° to 15°, the factor K_a changes from 1.0 to 2.0, doubling the calculated pier scour.

Design Factors (K_a) for Piers Not Aligned With Flow

L/w_p	**4**	**6**	**8**	**10**	**12**	**14**
Angle of Attack	**4**	**6**	**8**	**10**	**12**	**14**
0°	1.0	1.0	1.0	1.0	1.0	1.0
5°	1.2	1.3	1.3	1.5	1.6	1.6
10°	1.4	1.5	1.7	1.9	2.1	2.3
15°	1.5	1.8	2.0	2.2	2.5	2.7
20°	1.7	2.0	2.3	2.5	2.8	3.0
25°	1.8	2.2	2.5	2.8	3.1	3.5
30°	1.9	2.4	2.7	3.1	3.4	3.8
35°	2.0	2.5	2.9	3.3	3.7	4.0
40°	2.1	2.7	3.1	3.6	4.0	4.3
45°	2.2	2.8	3.3	3.8	4.2	4.6

See Scour Calculation Sheet to assist in pier scour estimation. Other subjects concerning pier scour discussed in more detail are found in Section 4.3.5 of HEC-18:

- Pier scour for exposed footings and exposed pile groups under a footing
- Pier footings that are above normal streambed
- Multiple columns in a pier (e.g., a pile bent pier)
- Pressure flow scour

- Scour from debris
- Width of pier scour holes

Summary of estimating pier scour:

- Analyze hydraulics
- Estimate scour
- Evaluate the reasonableness of the estimated scour
- Add pier scour to contraction scour to obtain total scour
- Determine action steps such as countermeasures or design features of the bridge

Coding for the Structure Inventory and Appraisal (SI&A)

See the attached pages from FHWA's "Recording and Coding Guide for the Structure Inventory and Appraisal of the Nation's Bridges" to determine what rating should be given to each bridge. All countermeasures (SI&A Item 113 coded as "7") should be monitored in future years by bridge inspectors.

Countermeasures: reducing the effects of scour

Generally, a new bridge should be designed to withstand scour without countermeasures, especially when the countermeasures cannot be easily inspected. For example, riprap protecting a pier in the channel is difficult to inspect, but a wing dike in the overbank is easily inspected and repaired. Countermeasures will be used most commonly on existing bridges that are scour critical. See HEC-18, Chapter 7, for an in-depth discussion of when and how to use countermeasures.

In summary, listed below are common considerations to reduce scour on the bridges. Some items may be relevant only to existing bridges; others may be relevant only in the design phase of a structure.

- Use longer piles.
- Set the pier or abutment footings lower. However, lengthening piles is generally preferred due to lesser cost.
- Place riprap around the pier, abutment, berm slope, or spur dike or across the entire streambed. Riprap is an easy and often inexpensive way to protect a bridge.
- Build abutments as far from the streambank as possible.
- Remove debris from piers.
- Wing dikes (a.k.a., spur dikes, guide banks) provide for a more hydraulically efficient bridge opening and force the scour to occur on the dike, which is expendable, rather than on the bridge itself.

More expensive solutions can be considered in some instances:

- Place sheet piling to protect existing piers or abutments.
- Underpin the foundation.
- Replace with a new bridge.
- Construct an additional span.
- Overflow (relief) bridges can be used on flood plains that have substantial overbank flow. This provides relief for the main channel bridge. However, be aware that these overflow structures are particularly susceptible to deep scour. Twenty to thirty feet of scour is not uncommon.
- Provide for road grade overflow which is a "relief valve" to the bridge opening during extreme flood events and can prevent or minimize damage to the bridge. A disadvantage to road grade overflow is potential hazard to the traveling public when water is over the road. These factors need to be weighed by the engineer when considering other factors such as traffic volumes, traffic speeds and costs.

Following are some design guidelines for sizing riprap and placing wing dikes as countermeasures. The recommendations concerning riprap are **not** intended to determine if it is needed, rather only how to properly size riprap.

1. Riprap at abutments.

Section 7.5.1 in HEC-18 gives several equations for sizing riprap at abutments. Considering these equations and past experience, IDOT recommends simplifying riprap design to the following:
When riprap is needed for countermeasure and the toe of the abutment berm or the vertical abutment is approximately 75 feet or less from the top of the bank, use the average velocity through the entire bridge opening to size the riprap. When the toe of the abutment berm or the vertical abutment is approximately 75 feet or more from the top of the streambank, use the average velocity in the overbank portion of the bridge opening.

When riprap is needed and the determined average velocity is less than approximately 8 feet per second, use IDOT's Class E riprap (D_{50} of 90 pounds). When the determined average velocity is greater than approximately 8 feet per second, use the Class B gradation which is heavier than Class E (D_{50} of 275 pounds).

2. Riprap at piers.

From Section 7.5.1 in HEC-18, the equation for sizing riprap at piers reduces to the following (assuming specific gravity of 2.65 for riprap):

$$D_{50} = \frac{(K\ V)^2}{153.6}$$

where D_{50} = median stone diameter, feet
K = coefficient for pier shape (1.5 for round-nose pier, 1.7 for square-nose pier)
V = average velocity approaching pier, ft/sec

To determine V, multiply the average channel velocity (Q/A) by a coefficient that ranges from 0.9 for a pier near the bank in a straight uniform reach of the stream to 1.7 for a pier in the main current of flow around a bend.

The D_{50} for IDOT's Class E riprap is 90 pounds or approximately 1.0-foot diameter and will be adequate for many situations. From the above equation, this diameter will tolerate a velocity of 8.3 ft/sec for round-nose piers and 7.3 ft/sec for square-nose piers.

When the adjusted velocity exceeds this and riprap is needed as a countermeasure, consider using Class B riprap. This has a D_{50} of 275 pounds which is approximately 1.5 feet in diameter and will tolerate a velocity of approximately 10 ft/sec for round-nose piers and 9 ft/sec for square-nose piers. This gradation should be adequate in almost all situations where the standard gradation is not adequate.

According to HEC-18, the width of the riprap around the pier should at least twice the pier column width. However, on several countermeasure projects, IDOT has placed a much wider layer (25') around the entire pier. The riprap should be placed at or below the streambed so as not to create a greater obstruction to flow. HEC-18 recommends a thickness for the pier scour protection layer of 3 x D_{50} or greater. IDOT has used thicknesses of three and four feet on previous projects. Either guideline seems reasonable.

3. Wing dikes

Use the Design Bureau's Standard Road Plan EW-210. See C3.2.2.7.5.3 for a table to determine the length of wing dikes. See also HEC-20 or HDS No. 1 for further guidance.

References

1. "Evaluating Scour at Bridges", Hydraulic Engineering Circular No. 18, Federal Highway Administration, Second Edition, April 1993.
2. "Evaluating Scour at Bridges", Hydraulic Engineering Circular No. 18, Federal Highway Administration, Third Edition, November 1995.
3. "Scour Around Bridge Piers and Abutments", Emmett M. Laursen and Arthur Toch, Iowa Highway Research Board, Bulletin No. 4, May 1956.
4. "Hydraulics of Bridge Waterways", Hydraulic Design Series No. 1, Federal Highway Administration, March 1978.
5. "Design of Riprap Revetment", Hydraulic Engineering Circular No. 11, Federal Highway Administration, 1989.
6. "Stream Stability at Highway Structures", Hydraulic Engineering Circular No. 20, Federal Highway Administration, February 1991.
7. "Stream Stability at Highway Structures", Hydraulic Engineering Circular No. 20, Federal Highway Administration, Second Edition, November 1995.
8. "Recording and Coding Guide for the Structure Inventory and Appraisal of the Nation's Bridges", Federal Highway Administration, December 1995.
9. "Evaluating Scour at Bridges", Hydraulic Engineering Circular No. 18, Federal Highway Administration, Fifth Edition, April 2012.

SCOUR CALCULATION SHEET

LOCATION

County_____ Hwy. No_____Des. No. _____
Maint. No._____ FHWA No_____
Stream_____ Drain. Area _____sq. mi.
Twp_____ Range_____Section_____
Prepared by_____ Date_____

BRIDGE DESCRIPTION

Size and Type_____

Pier

Type_____ Width_____ft Shape Coeff (K_s)_____
Angle of Attack_____ Coeff (K_{al})_____
Pile Type_____ Pile Length below Str.Bed _____Pile Tip Elev_____

Abutment

Type_____ Pile Type_____Pile Length_____
Pile Tip Elev_____ Berm Slope_____ (proposed or existing)

STREAM INFORMATION

Exist. Streambed Elev_____ Stream Slope_____ft/mi
n-values: LOB_____ Channel_____ROB_____
Soils:Type_____Depth* _____D_{50} _____ft
Type_____Depth* _____
Type_____Depth* _____
Type_____Depth*_____ *below streambed

Streambed Degradation

At this site_____ feet since _____year
At other known sites _____feet since _____year
Estimated future degradation _____feet

HYDROLOGIC/ HYDRAULIC INFORMATION

Low road elev. _____

Methodology used to determine: Q _____Water surface elev. _____

	Q_{200}	Q_{500} or $Q_{overtopping}$
Discharge (Q), cfs	_____	_____
Water surface elev.		
y_1, depth in main channel, ft		
Vel. in main channel, fps		

CONTRACTION SCOUR

$V_c = 10.95\ y^{0.167}\ D_{50}^{0.33} =$ ft/sec. If V_c < average channel velocity, use live-bed scour equation. If V_c > average channel velocity, use clear-water scour equation.

Live-bed scour

Generally, used for Cases 1a, 1b, 2, and 4, and also for the main channel scour portion of Case 1c. See Section 4.3.4 in HEC-18.

$$\frac{y_2}{y_1} = \left[\frac{Q_2}{Q_1}\right]^{0.86} \left[\frac{W_1}{W_2}\right]^{0.64}$$

	Q_{200}	Q_{500} or $Q_{overtopping}$
Q_2, discharge in the contracted channel, cfs	_____	
Q_1, discharge in the upstream main channel, cfs		
W_1, top width of the upstream main channel, ft		
W_2, top width of the main channel in contracted section (i.e., bridge opening), ft	_____	
y_1, ave. depth in upstream main channel, ft		
y_2, ave. depth in contracted section, ft		
$y_s = y_2 - y_1$ = ave. scour depth, ft		

Clear-water scour

For Case 3 and the overbank area of the bridge opening for Case 1c. Occasionally used for Cases 1a, 1b, 1c (main channel portion), and 2.
See Section 4.3.4 in HEC-18.

$$y_2 = \left[\frac{Q^2}{139\ (D_{50})^{0.67} (W_2)^2}\right]^{0.43}$$

	Q_{200}	Q_{500} or $Q_{overtopping}$
y_2, depth in bridge opening, ft	_____	_____
Q, discharge through bridge opening or on overbank portion of bridge opening, cfs	_____	_____
D_{50}, median diameter of material in overbank, ft	_____	
W_2, top width of bridge opening or overbank width in bridge opening, ft		
y_1, upstream depth, ft	_____	
$y_s = y_2 - y_1$ = ave. scour depth, ft	_____	_____

Is this contraction scour depth realistic?
Is the soil scourable?
What is the effect on berm stability (including any abutment scour)?
Are longer abutment piles or a flatter abutment berm needed?
Should riprap or wing dikes be used?
Other comments?

PIER SCOUR

Use "Scour Around Bridge Piers and Abutments", Emmett M. Laursen and Arthur Toch, Iowa Highway Research Board Bulletin No. 4, 1956, for most cases. Use Equation 2 below and previous discussion in the text. Also, see Section 4.3.5 in HEC-18 for more discussion on estimating pier scour.

$$y_s = 1.485\,(K)\,(w_p)\left(\frac{y_1}{w_p}\right)^{0.314} \qquad \text{Equation 2}$$

where y_s, depth of scour, ft
y_1 , unscoured depth of flow, ft
w_p, width of pier column, ft
K, a pier coefficient (either K_s or K_a),
K_s, coefficient for pier nose shape (see values in text). Use only if angle of attack = 0.
K_a, coefficient for angle of attack if angle is not zero (see table in text).

	Q_{200}	Q_{500} or $Q_{overtopping}$
y_1, ft		
w_p, ft		
K (either K_a or K_s)		
y_s, ft (from Equation 2)		

TOTAL SCOUR AT PIER = pier scour (y_s) + contraction scour (y_s)

y_s, ft	(pier)	
y_s, ft	(contraction)	_____
Total scour, ft		_____
Normal streambed elev.		_____
Scour elevation		_____

Is y_s or the total scour depth at the pier realistic?
Is the soil scourable?
What is the effect on pile stability?
Should riprap or other countermeasures be used?
What is the rating for SI&A Item 113?
Other comments?

Sediment Grade Scale, from "Stream Stability at Highway Structures", Hydraulic Engineering Circular No. 20, Federal Highway Administration, Fourth Edition, April 2012.

SEDIMENT GRADE SCALE

Size	*Size*	*Size*	*Approximate Sieve Mesh Openings (per inch)*	*Approximate Sieve Mesh Openings (per inch)*	*Class*
Millimeters	Microns	Inches	Tyler	U.S. Standard	
4000-2000	---	180-160	---	---	Very Large Boulders
2000-1000	---	80-40	---	---	Large Boulders
1000-500	---	40-20	---	---	Medium Boulders
500-250	---	20-10	---	---	Small Boulders
250-130	---	10-5	---	---	Large Cobbles
130-64	---	5-2.5	---	---	Small Cobbles
64-32	---	2.5-1.3	---	---	Very Coarse Gravel
32-16	---	1.3-0.6	---	---	Coarse Gravel
16-8	---	0.6-0.3	2.5	---	Medium Gravel
8-4	---	0.3-0.16	5	5	Fine Gravel
4-2	---	0.16-0.08	9	10	Very Fine Gravel
2.00-1.00	2000-1000	---	16	18	Very Coarse Sand
1.00-0.50	1000-500	---	32	35	Coarse Sand
0.50-0.25	500-250	---	60	60	Medium Sand
0.25-0.125	250-125	---	115	120	Fine Sand
0.125-0.062	125-62	---	250	230	Very Fine sand
0.062-0.031	62-31	---			Coarse Silt
0.031-0.016	31-16	---			Medium Silt
0.016-0.008	16-8	---			Fine Silt
0.008-0.004	8-4	---			Very Fine Silt
0.004-0.0020	4-2	---			Coarse Clay
0.0020-0.0010	2-1	---			Medium Clay
0.0010-0.0005	1-0.5	---			Fine Clay
0.0005-0.0002	0.5-0.24	---			Very Fine Clay

Case 1 Contraction Scour, from Appendix H, "Evaluating Scour at Bridges", Hydraulic Engineering Circular No. 18, Federal Highway Administration, Second Edition, April 1993.

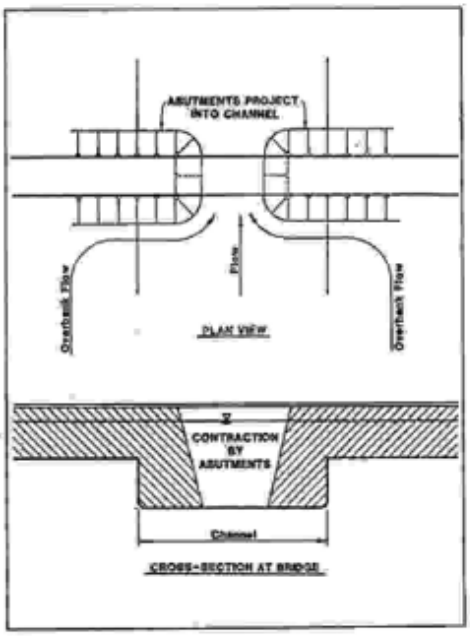

Case 1A: Abutments project into channel

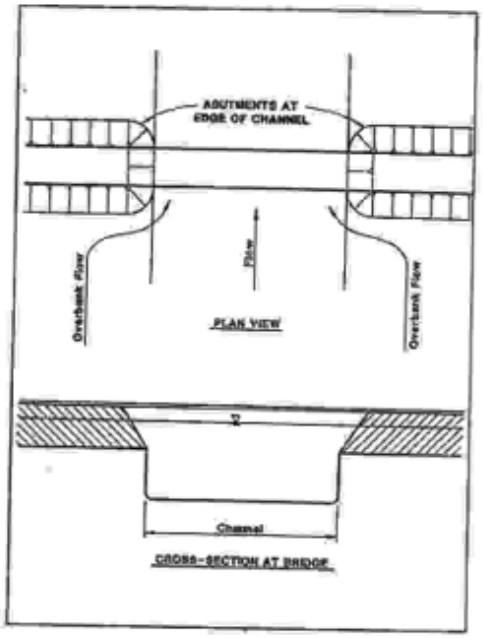

Case 1B: Abutments at edge of channel

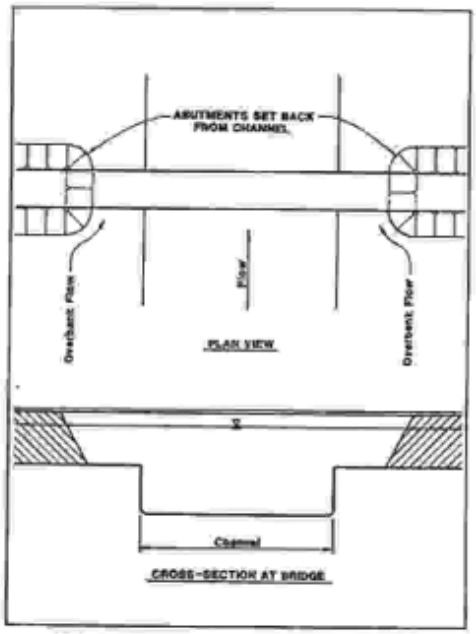

Case 1C: Abutments set back from channel

Cases 2, 3 and 4 Contraction Scour, from Appendix H, "Evaluating Scour at Bridges", Hydraulic Engineering Circular No. 18, Federal Highway Administration, Second Edition, April 1993.

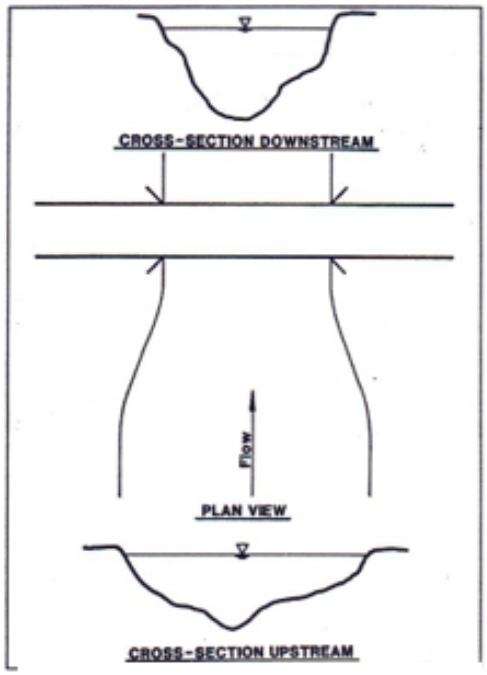

Case 2A: River narrows

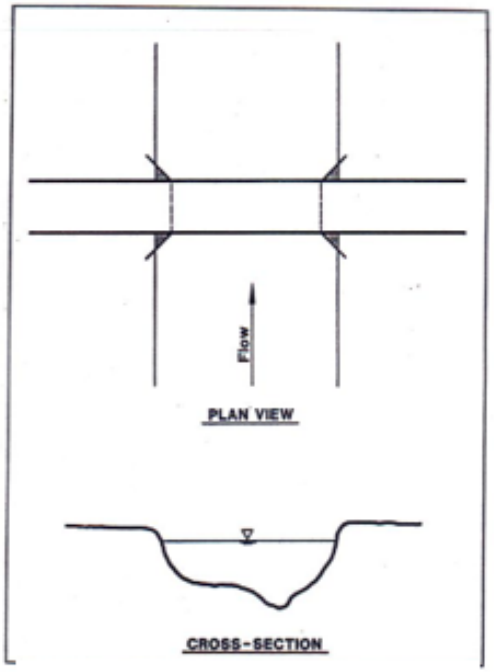

Case 2B: Bridge abutments constrict flow

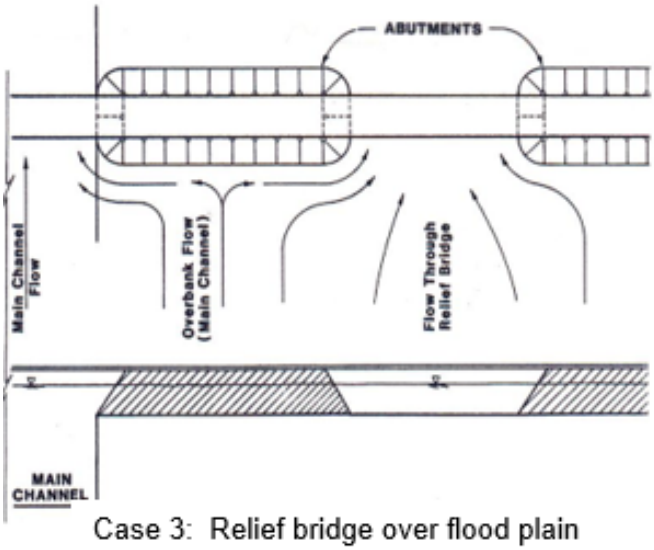

Case 3: Relief bridge over flood plain

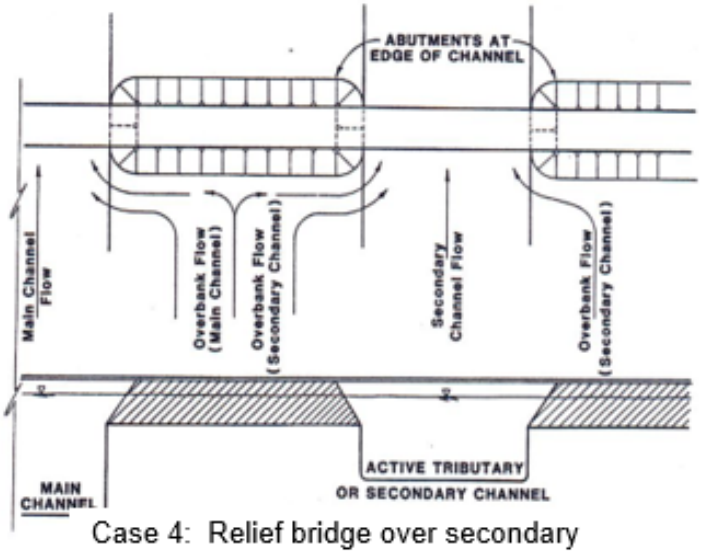

Case 4: Relief bridge over secondary stream

From "Recording and Coding Guide for the Structure Inventory and Appraisal of the Nation's Bridges", Federal Highway Administration, December 1995.

ITEM 113--SCOUR CRITICAL BRIDGES

Use a single-digit code as indicated below to identify the current status of the bridge regarding its vulnerability to scour. Scour analyses shall be made by hydraulic/geotechnical/structural engineers. Details on conducting a scour analysis are included in the FHWA Technical Advisory 5140.23 titled, "Evaluating Scour at Bridges". Whenever a rating factor of 4 or below is determined for this item, the rating factor for "Item 60 – Substructure" may need to be revised to reflect the severity of actual scour and resultant damage to the bridge. A scour critical bridge is one with abutment or pier foundations which are rated as unstable due to (1) observed scour at the bridge site or (2) a scour potential as determined from a scour evaluation study.

Code	Description
N	Bridge not over waterway.
U	Bridge with "unknown" foundation that has not been evaluated for scour. Since risk cannot be determined, flag for monitoring during flood events and, if appropriate, closure.
T	Bridge over "tidal" waters….
9	Bridge foundations (including piles) on dry land well above floodwater elevations.
8	Bridge foundations determined to be stable for assessed or calculated scour conditions; calculated scour is above top of footing. (Example A)
7	Countermeasures have been installed to correct a previously existing problem with scour. Bridge is no longer scour critical
6	Scour calculation/evaluation has not been made. (Use only to describe cases where bridge has not yet been evaluated for scour potential.)
5	Bridge foundations determined to be stable for calculated scour conditions; scour within limits of footing or piles. (Example B)
4	Bridge foundations determined to be stable for calculated scour conditions; field review indicates action is required to protect exposed foundations from effects of additional erosion and corrosion.
3	Bridge is scour critical; bridge foundations determined to be unstable for calculated scour conditions: --Scour within limits of footing or piles. (Example B) --Scour below spread-footing base or pile tips. (Example C)
2	Bridge is scour critical; field review indicates that extensive scour has occurred at bridge foundations. Immediate action is required to provide scour countermeasures.
1	Bridge is scour critical; field review indicates that failure of piers/abutments is imminent. Bridge is closed to traffic.
0	Bridge is scour critical. Bridge has failed and is closed to traffic.

ITEM 113--SCOUR CRITICAL BRIDGES (CONT'D)

Example	**Calculated Scour Depth** Spread Footing Pile Footing (not founded in rock)	**Action Needed**
A. Above top of footing	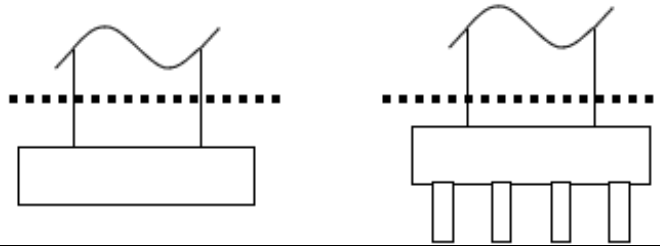	None--indicate rating of 8 for this item
B. Within limits of footing or piles	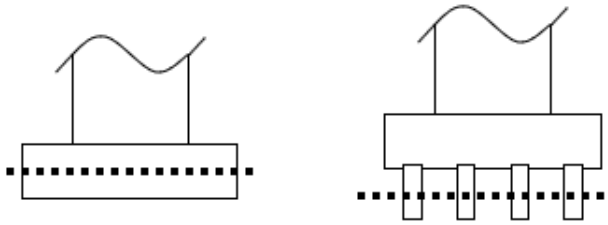	Conduct foundation structural analysis
C. Below pile tips or spread footing base	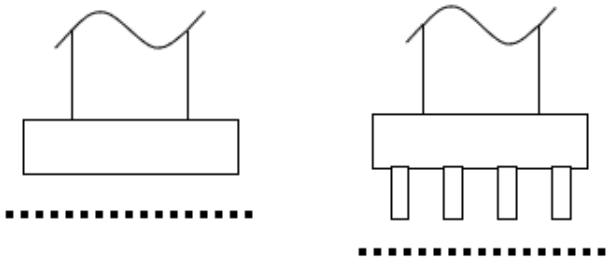	Provide for monitoring and scour countermeasures as necessary.

Calculated Scour Depth = ▪▪▪▪▪▪▪▪▪▪▪▪▪▪▪▪▪

BULLETIN NO. 4

IOWA HIGHWAY RESEARCH BOARD

Scour Around Bridge Piers And Abutments

by

Emmett M. Laursen and Arthur Toch
Iowa Institute of Hydraulic Research
State University of Iowa

Prepared by the
Iowa Institute of Hydraulic Research
in cooperation with
THE IOWA STATE HIGHWAY COMMISSION
and
THE BUREAU OF PUBLIC ROADS

May 1956

PB—C-8314

adapted from Laursen, Bulletin #4

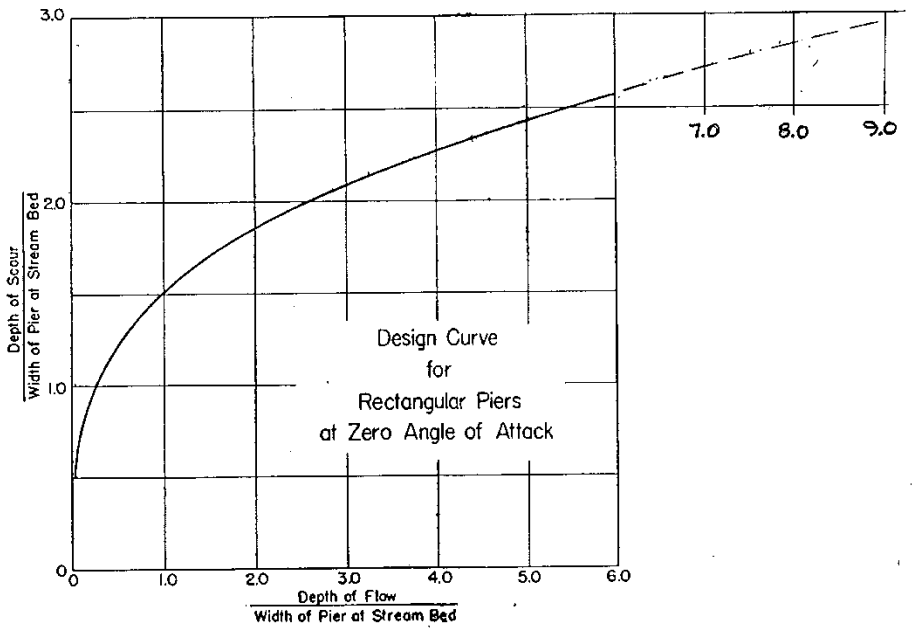

Fig. 38. Basic design curve for depth of scour.

From Laursen Bulletin #4

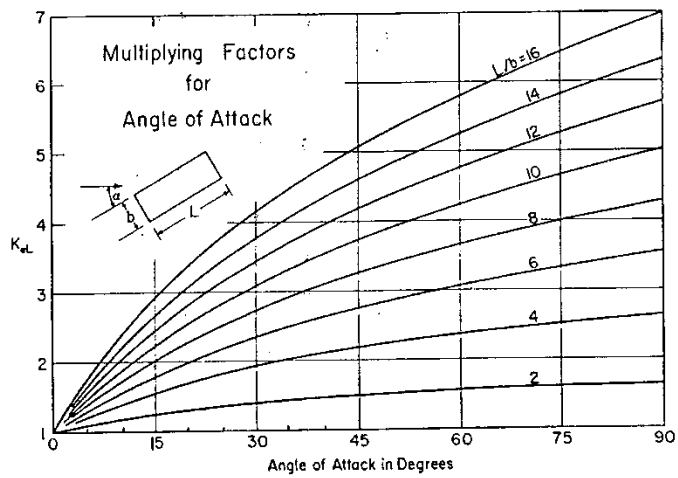

Fig. 39. Design factors for piers not aligned with flow.

TABLE V

Shape coefficients K_s for nose forms

(To be used *only* for piers aligned with flow)

Nose form	Length-width ratio	K_s
Rectangular		1.00
Semicircular		0.90
Elliptic	2:1	0.80
	3:1	0.75
Lenticular	2:1	0.80
	3:1	0.70

C3.2.2.7.1 Types

C3.2.2.7.2 Design conditions

C3.2.2.7.3 Evaluating existing structures

C3.2.2.7.4 Depth estimates

C3.2.2.7.5 Countermeasures

C3.2.2.7.5.1 Riprap at abutments

C3.2.2.7.5.2 Riprap at piers

C3.2.2.7.5.3 Wing dikes

Determining Wing Dike Lengths

The use of wing dikes (also called spur dikes or guide banks) shall be considered at any bridge site that has appreciable overbank discharge. Wing dikes help minimize backwater and scour effects. Refer to IDOT's Design Bureau Standard EW-210 for specific details on slopes, dimensions and other notes. Items that need to be specified for EW-210 include Length and Station Location.

Generally, the top of dike elevation will be the same as the abutment berm elevation. However, if this berm elevation is much higher than the Q_{50} or Q_{100} elevations, a lower wing dike elevation may be specified.

The following guidelines provide assistance in determining appropriate wing dike lengths. "Long" and "Short" refer to the longer and shorter wing dikes necessary on skewed bridges as shown onEW-210. If obtaining right of way for the recommended length is a problem at a bridge site, a shortened wing dike is preferred over no dike.

Wing Dike Lengths, in feet (meters)

Bridge Length, feet (meters)	Bridge Skew						
	0 deg.	15 deg.		30 deg.		45 deg.	
	Equal	Long	Short	Long	Short	Long	Short
< 150 (45)	40 (12)	45 (14)	40 (12)	60 (18)	40 (12)	85 (26)	40 (12)
150-180 (45-55)	50 (16)	60 (19)	50 (16)	80 (24)	50 (16)	120 (36)	50 (16)
180-210 (55-65)	65 (20)	75 (23)	65 (20)	100 (30)	65 (20)	150 (45)	65 (20)
210-240 (65-75)	80 (24)	95 (28)	80 (24)	120 (36)	80 (24)	180 (54)	80 (24)
> 240 (75)	95 (28)	105 (32)	95 (28)	140 (42)	95 (28)	205 (63)	95 (28)

C3.2.2.7.6 Coding

C3.2.2.8 Riverine Infrastructure Database

C3.2.2.9 Datum Correlation

C3.2.2.10 Stream Stability

C3.2.2.10.1 Hydraulic Grade Line and Streambed Profile Determination

C3.2.2.10.2 Grade Control Structures

C3.2.2.11 State Water Trail and Paddling Routes

C3.3 Highway crossings

C3.3.1 Clearances

C3.3.2 Ditch drainage

C3.4 Railroad crossings

C3.4.1 BNSF and UP overhead structures

C3.4.1.1 Vertical clearance

C3.4.1.2 Horizontal clearance

C3.4.1.3 Piers

C3.4.1.4 Bridge berms

C3.4.1.5 Drainage

C3.4.1.6 Barrier rails and fencing

C3.4.2 Non-BNSF and -UP overhead structures

C3.4.2.1 Vertical clearance

C3.4.2.2 Horizontal clearance

C3.4.2.3 Piers

C3.4.2.4 Bridge berms

C3.4.2.5 Drainage

C3.4.2.6 Barrier rails and fencing

C3.4.3 Underpass structures

C3.4.4 Submittals

1 December 2008

In discussions with the BNSF and UP railroads, the bureau has agreed to provide the new standard sheet 1067 and the information listed below. This information will be provided by Preliminary Design Unit on the Plan View and Elevation View on the TS & L sheet of all bridge projects that involve BNSF and UP railroad except the items noted with an asterisk (*). These items will be provided by the Final Design Units. Final Design Units should review the list to make sure all information is provided.

Plan View
1. Centerline of bridge and/or centerline of project.
2. Track layout and limits of railroad right-of-way with respect to centerline of main lines.
3. Future tracks, access roadways and existing tracks as main line, siding, spur, etc.
4. Horizontal clearance at right angle from centerline of nearest existing or future track to the face of obstruction such as substructure above grade.
* 5. Horizontal clearance at right angle from centerline of nearest existing or future track to the face of nearest foundation below grade.
6. Horizontal spacing at right angle between centerlines of existing and/or future tracks.
* 7. Limits of shoring and minimum distance at right angle from centerline of nearest track.
8. All existing facilities and utilities.

9. Existing ground shots and proposed grading.
10. Railroad Milepost and direction of increasing Milepost (Provided by Railroad).
11. Direction of flow for all drainage systems within project limits.
* 12. Limits of barrier rail and fence with respect to centerline of track.
* 13. Location of deck drains (Note drains shall not be located over the railroad right-ofway).
* 14. Total width of superstructure.
15. Width of shoulder and/or sidewalk.
16. North arrow
17. Footprint of proposed superstructure and substructure including existing structure if Applicable

Elevation View
1. Future tracks, access roadways and existing tracks as main line, siding, spur, etc.
2. Point of minimum vertical clearance and distance within the vertical clearance envelope, measured perpendicular from the centerline of nearest track.
* 3. Limits of shoring and minimum distance at right angle from centerline of nearest track.
4. Toe of slope and/or limits of retaining wall.
* 5. Limits of barrier rail and fence with respect to centerline of track.
6. Depth of foundation from top of tie / base of rail.
* 7. Top and bottom of pier protection wall elevation relative to top of rail elevation.
8. Controlling dimensions of drainage ditches and/or drainage structures.
9. Top of rail elevations for all tracks.
10. Minimum permanent vertical clearance above the top of high rail to the lowest point under the bridge.
11. Existing and proposed groundline and roadway profile.
12. Show slope and specify type of slope paving. Toe of slope shall be shown relative to drainage ditch and top of subgrade.

Note: Items denoted with an asterisk shall be provided by Final Design.

The new 1067 CADD standard shows details of:
1. Railroad General Notes
2. General Shoring Notes
3. General Excavation Zones detail
4. Minimum Construction Clearance Envelope detail
5. Top of Rail Elevations chart.

For additional information, see BNSF Railway – Union Pacific Railroad, Guidelines for Railroad Grade Separation Projects.

C3.5 Pedestrian and shared use path crossings

Factors to be considered when determining whether the bridge side path will be raised or at-grade:

a) Ponding can occur at ramped transitions if approach sidewalk elevation is different from bridge sidewalk elevation. If the cross slope direction changes from on the approach to on the bridge the path must be warped and may be difficult to drain. Ponding can be especially troublesome during winter months.

b) Ramping between side path segments at different elevation must conform to accessibility requirements in accordance with ADA standards. SUDAS recommendations should also be checked for potential conflicts when ramped transitions are used.
c) Settlement, if it were to occur, could be potentially worsened by ramping and reversed cross slope, especially in terms of the effort necessary to properly repair.
d) Side path maintenance is by the local municipality, not the DOT. Typical equipment is a small mower type tractor with brush or plow blade attachment. Snow removal operation could be negatively affected by elevation tapers or ramps.
e) Imminent future conditions change can affect the design choice. Occasionally a bridge will be built in a rural area but with a raised side path due to impending development in the immediate surroundings that will eventually change the approach roadway section from rural to urban. There may be no current paved path in place, no path at all, or there may be an unpaved dirt path which is easier to ramp to the bridge trail without worry of some of the implications previously described, especially since it may not be a maintained path in its interim condition. Decisions on bridge side path elevation should be coordinated with external partners at the municipality by DOT District staff.
f) The TxDOT T411 or “Texas Classic” barrier (BDM 5.8.1.2.5), when used as a separator, is ideally employed without a raised sidewalk due to ADA noncompliance that occurs with the standard cross section. A design modification is necessary to make this barrier ADA compliant when the sidewalk is raised.
g) When the Modified B-25 Series barrier (BDM 5.8.1.2.5) is used as a side path separator, the path surface cannot be raised. This should not typically cause concern, since this barrier type is only used when paths are accommodated along high-speed (50 MPH and above) roadways which are typically rural in cross section.
h) If a side-mounted pedestrian and bicycle railing is proposed at the outer edge of deck along a side path, a raised sidewalk can provide the additional concrete section that is desirable for mounting such railings. It may also be desirable for the outermost segment of the side path to consist of a full-depth segment for the railing anchorage, in which case the raised side path slab would overlap the limit of the initial deck pour. An example of this detail can be provided by the Methods Engineer upon request.

Bridges that are stage-constructed will sometimes have a side path that is used for traffic during an early stage. Such side paths, if they will be raised in the ultimate condition, will not have continuity reinforcing integrated into deck construction. This reinforcing must be drilled into the deck concrete once the path surface is no longer used for staged traffic. The deck surface at the path must also be finished smooth to provide a proper riding surface during staged traffic operations, so this concrete must be mechanically roughened prior to raised side path slab placement. The preliminary designer shall ensure that adequate drainage is provided for each stage on the bridge.

On superelevated bridges with a rural or urban approach condition and an at-grade side path along the high side of the bridge, the path may be allowed to drain into the roadway through openings in the separation barrier. Cross slope must be sufficient to ensure that no accumulations of water in the roadway will enter the side path through the separator. On superelevated bridges with a side path along the low side, roadway and path drainage must be handled separately, potentially with drains on each side of the separation barrier. Drains within side paths must be trench-type drains with cover grates that are ADA compliant, i.e. with openings oriented transverse to the path and no wider than 0.5 inch. Drain grates must be set flush or below the path surface within 0.25 inch, with concrete tapered to the grate at a 2:1 maximum slope.

C3.6 Superstructures

C3.6.1 Type and span

C3.6.1.1 CCS J-series

C3.6.1.2 PPCB

Preliminary haunch for all Prestressed Beam Bridges

Note: The calculations provide a haunch thickness estimate (X) value, which does not include the nominal haunch thickness.

$S := 111.5 \cdot ft$ Longest Span (feet)

$e := 0.03$ Superelevation (feet/feet)

$G_1 := -1.68$ Grade 1 vertical curve [+ increasing, - decreasing] (%)

$G_2 := 2.10$ Grade 2 vertical curve [+ increasing, - decreasing] (%)

$A := \frac{G_2 - G_1}{100}$ $A = 0.038$

$L := 984 \cdot ft$ Length vertical curve (feet)

$D_c := 1.75 deg$ Degree of Horizontal Curvature (degree)

$C := 0.337 \cdot ft$ Final Beam Camber (feet) - From prestressed concrete beam standards

$D := 0.19 \cdot ft$ Dead load deflection - Elastic + 1/2 Plastic (feet) - From prestressed concrete beam standards

$T := 1.667 \cdot ft$ Top flange width (feet)

X = Haunch estimate along the centerline of the beam.

$$X := (C - D) + \frac{S \cdot e}{2} \cdot \left(\frac{1}{\sin\left(\frac{D_c}{2}\right)} - \frac{1}{\tan\left(\frac{D_c}{2}\right)} \right) + \left(\frac{S}{L}\right)^2 \cdot A \cdot \frac{L}{8}$$

$X = 0.219 \cdot ft$ $X = 66.894 \cdot mm$

~~~~~~~~ ~~~~~~~~

$T \cdot e = 0.6 \cdot in$

If T * e < 1 then X < 4 in.If T * e > 1 then X < 3 in.

Also check maximum offset for horizontal curve < or = 9 in.
~~~~~~~~

C3.6.1.3 CWPG

The table below based on information from the AASHTO LRFD Specifications [AASHTO-LRFD 2.5.2.6.3] can be used as a guide to establish minimum girder depths, when 1/25 of the span is not possible due to vertical clearance or profile grade issues.

Traditional Minimum Depths for Constant Depth Superstructures

Superstructure	Superstructure	Minimum Depth (Including Deck) When variable depth members are used, values may be adjusted to account for changes in relative stiffness of positive and negative moment sections.	Minimum Depth (Including Deck) When variable depth members are used, values may be adjusted to account for changes in relative stiffness of positive and negative moment sections.
Material	Type	Simple Spans	Continuous Spans
Steel	Overall Depth of Composite I-Beam	0.040L	0.032L
	Depth of I-Beam Portion of Composite I-Beam	0.033L	0.027L
	Trusses	0.100L	0.100L

C3.6.1.4 Cable/Arch/Truss

C3.6.2 Width

C3.6.2.1 Highway

C3.6.2.2 Sidewalk, separated path, and bicycle lane

C3.6.3 Horizontal curve

C3.6.3.1 Spiral curve

C3.6.4 Alignment and profile grade

For situations where the profile grade line is not at the centerline of approach roadway, elevations for the bridge deck will be established taking the bridge deck crown into account. The elevations will be noted on the TS&L as "TOP OF BRIDGE DECK AT CENTERLINE ROADWAY IS 'X' ABOVE (OR BELOW) THE PROFILE GRADE TO ACCOUNT FOR DECK CROSS SLOPE AND PARABOLIC CROWN.

For situations where the profile grade line is at the centerline of approach roadway, elevations for the bridge deck will be established in accordance with BDM 1.7.1.

C3.6.5 Cross slope drainage

C3.6.6 Deck drainage

C3.6.7 Bridge inspection/maintenance accessibility

C3.6.8 Railings

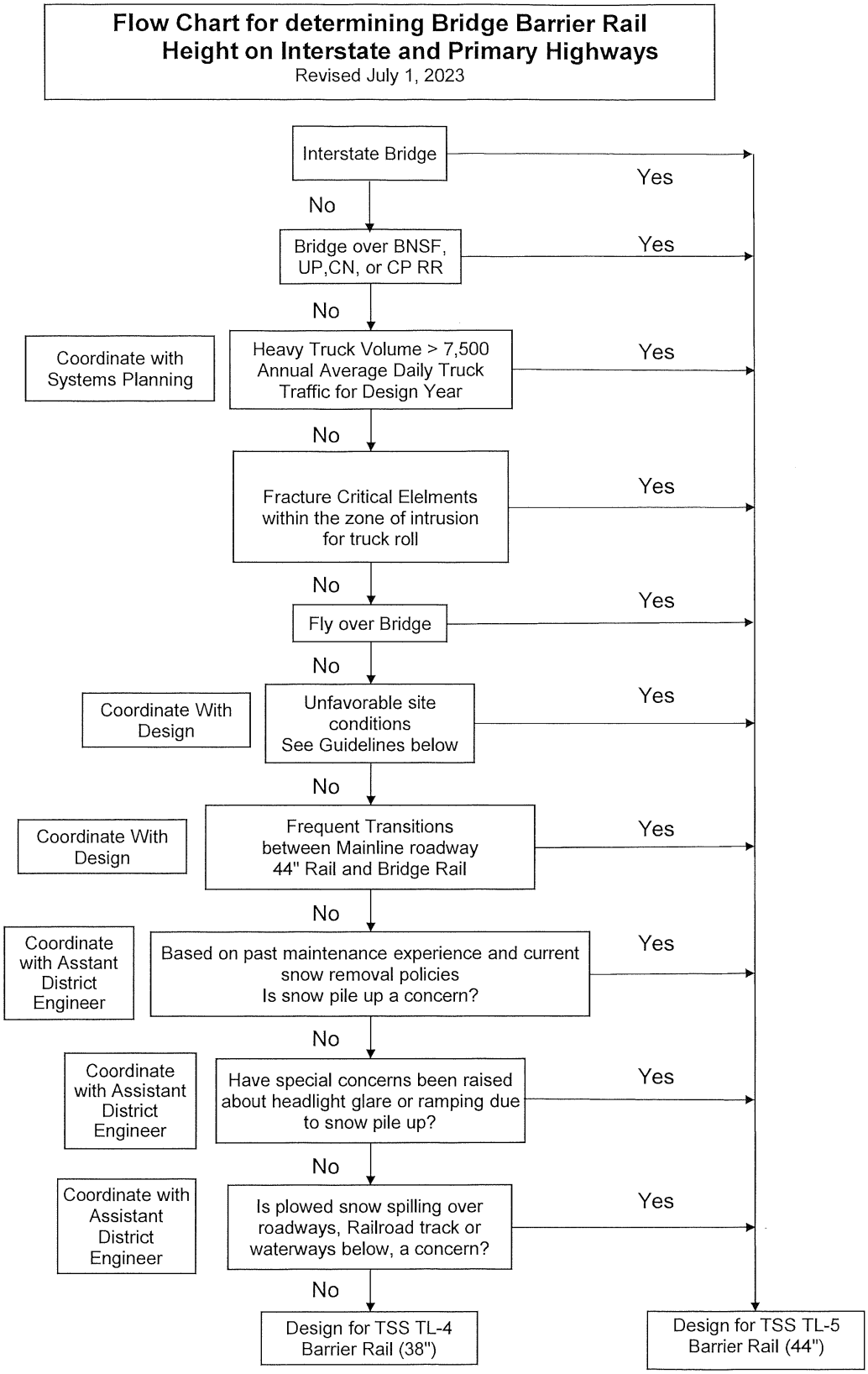
Flow Chart for determining Bridge Barrier Rail Height on Interstate and Primary Highways
Revised July 1, 2023
Interstate Bridge
Yes
No
Bridge over BNSF, UP,CN, or CP RR
Yes
No
Coordinate with Systems Planning
Heavy Truck Volume > 7,500 Annual Average Daily Truck Traffic for Design Year
Yes
No
Fracture Critical Elelments within the zone of intrusion for truck roll
Yes
No
Fly over Bridge
Yes
No
Coordinate With Design
Unfavorable site conditions See Guidelines below
Yes
No
Coordinate With Design
Frequent Transitions between Mainline roadway 44" Rail and Bridge Rail
Yes
No
Coordinate with Asstant District Engineer
Based on past maintenance experience and current snow removal policies Is snow pile up a concern?
Yes
No
Coordinate with Assistant District Engineer
Have special concerns been raised about headlight glare or ramping due to snow pile up?
Yes
No
Coordinate with Assistant District Engineer
Is plowed snow spilling over roadways, Railroad track or waterways below, a concern?
Yes
No
Design for TSS TL-4 Barrier Rail (38")
Design for TSS TL-5 Barrier Rail (44")

Guidelines for unfavorable site conditions (see flow chart above):

- Reduced radius of curvature
- Steep downgrades on curvature
- Variable cross slopes
- Adverse weather conditions

C3.6.8.1 Barrier Rail End Treatments

C3.6.8.2 Separation Rail

C3.6.9 Staging

Two example staging sketches are provided below.

EXAMPLE - PROPOSED CONCEPT STAGING SKETCH

NOTE: ANCHOR TBR TO THE DECK IF OFFSET TO DROPOFF IS LESS THAN 45 INCHES.

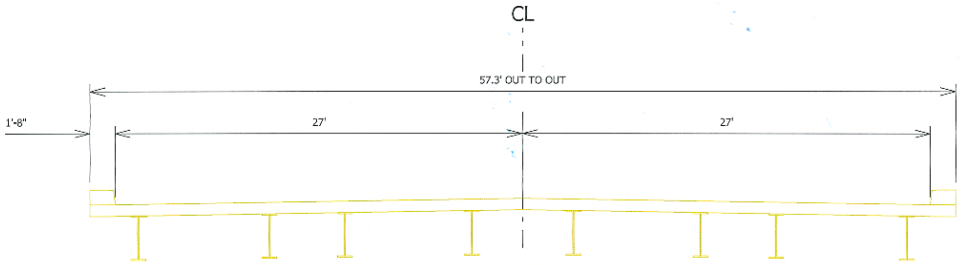

EXISTING BRIDGE

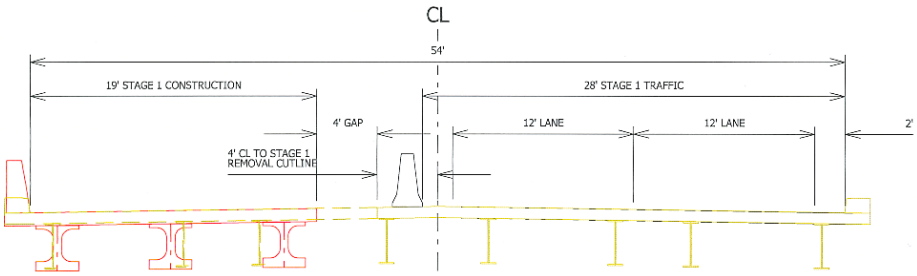

STAGE 1

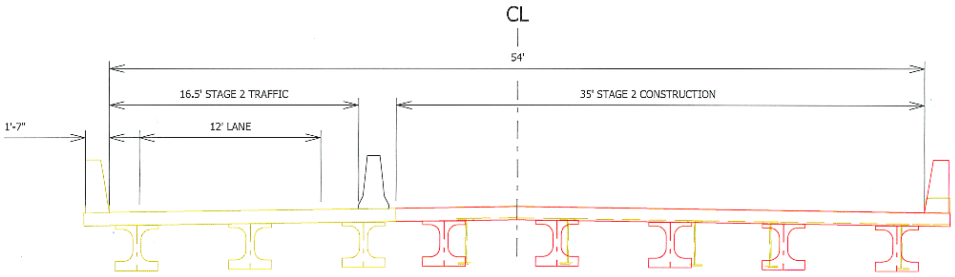

STAGE 2

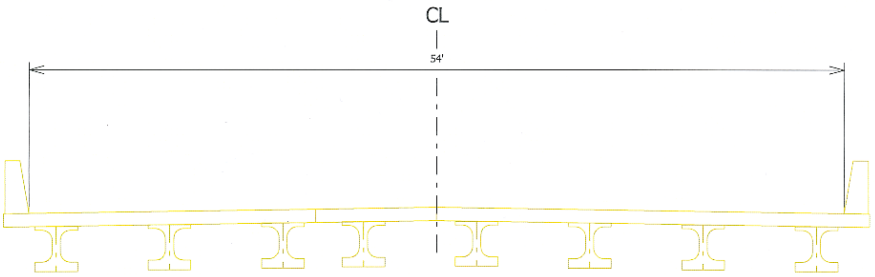

COMPLETED REPLACEMENT BRIDGE

12-14-23

Complex Staging Example:

C3.7 Substructures

C3.7.1 Skew

C3.7.2 Abutments

C3.7.3 Berms

C3.7.3.1 Slope

C3.7.3.2 Toe offset

C3.7.3.3 Berm slope location table

See also the RBLT example C3.2.7.3.4.

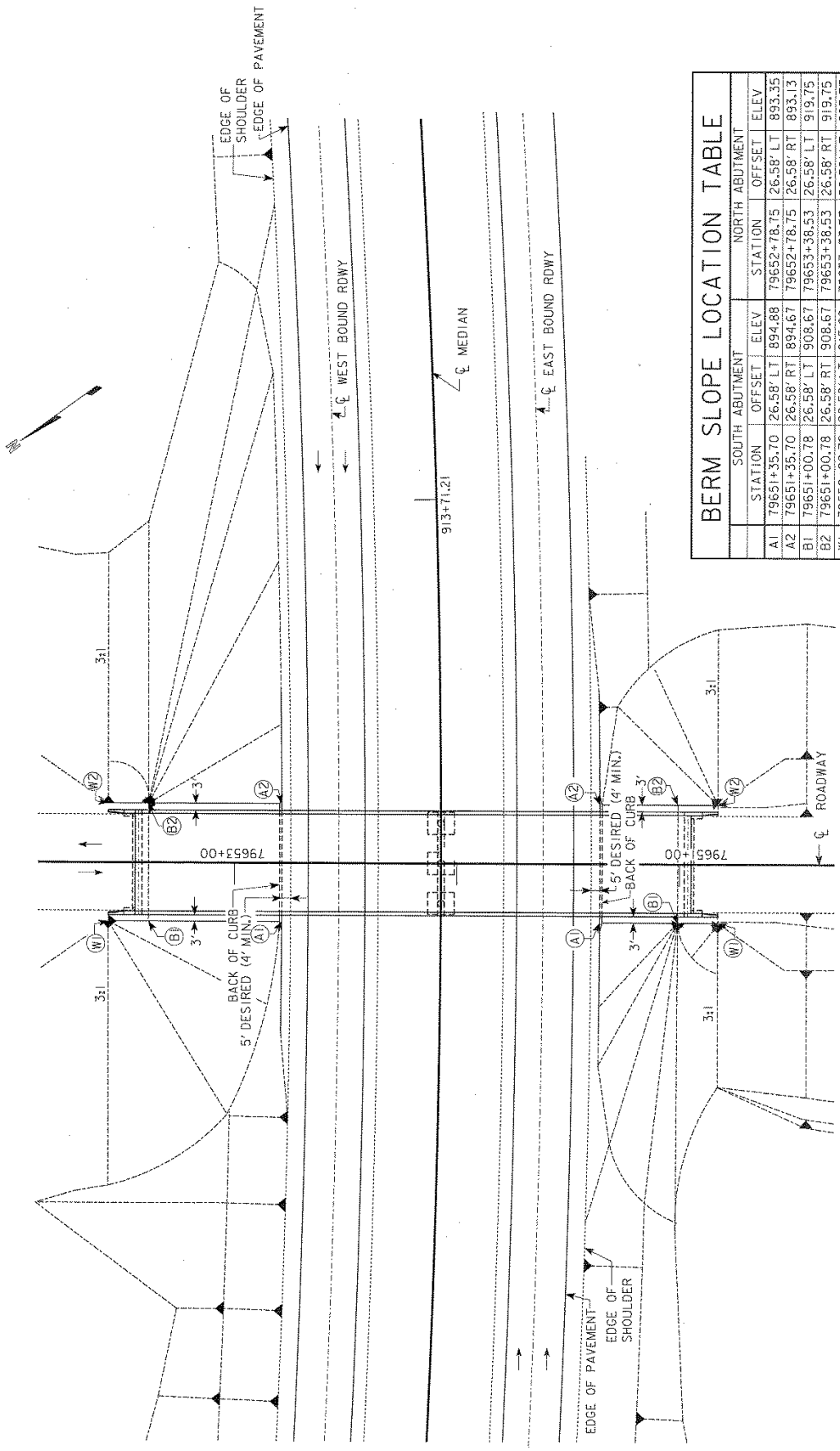

BERM SLOPE LOCATION TABLE

	SOUTH ABUTMENT			NORTH ABUTMENT		
	STATION	OFFSET	ELEV	STATION	OFFSET	ELEV
A1	79651+35.70	26.58' LT	894.88	79652+78.75	26.58' LT	893.35
A2	79651+35.70	26.58' RT	894.67	79652+78.75	26.58' RT	893.13
B1	79651+00.78	26.58' LT	908.67	79653+38.53	26.58' LT	919.75
B2	79651+00.78	26.58' RT	908.67	79653+38.53	26.58' RT	919.75
W1	79650+82.78	26.58' LT	915.22	79653+53.53	26.58' LT	927.37
W2	79650+82.78	26.58' RT	915.22	79653+53.53	26.58' RT	927.37

BERM SLOPE ELEVATIONS REFLECT GRADING SURFACE

REVISED JULY 2013

EXAMPLE BERM SLOPE LOCATION TABLE (BSLT)

SLOPE PROTECTION LOCATION FOR BSLT GRADING SURFACES

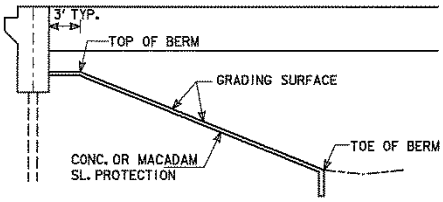

NOTES:

1. BSLT POINTS GIVEN AT THE GRADING SURFACE = TOP OF SLOPE PROTECTION.

2. THE GRADING SURFACE IS DEFINED BY THE BRIDGE OFFICE SLOPE PROTECTION STANDARD.

3. WING ARMORING DETAILS ARE DEFINED BY THE BRIDGE OFFICE WING ARMORING STANDARDS.

4. SLOPE PROTECTION AND WING ARMORING QUANITIES WILL BE CALCULATED IN FINAL DESIGN.

CONCETE OR MACADAM SLOPE PROTECTION

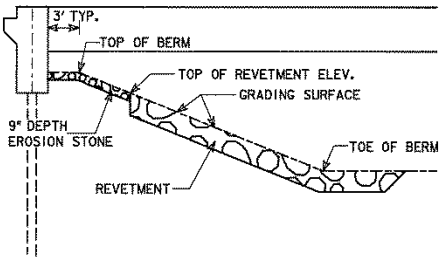

NOTES:

1. BSLT POINTS GIVEN AT GRADING SURFACE = TOP OF EROSION STONE AND TOP OF EMBEDDED REVETMENT.

2. THE GRADING SURFACE SHALL BE LABELED ON THE TSL REVETMENT TYPICAL SECTION. TOP OF REVETMENT ELEVATION SHALL BE DEFINED.

3. ADDITIONAL EROSION STONE DETAILS ARE COVERED BY THE BRIDGE OFFICE SLOPE PROTECTION STANDARD.

4. REVETMENT AND EROSION STONE BERM ARMORING ARE PLACED BELOW THE GRADING SURFACE AND WILL REQUIRE "CORE OUT". DEFINE LIMITS OF THE CORE OUT IN THE PLANS. THE BERM ARMORING QUANTITIES TABLE SHALL INCLUDE (AS APPLICABLE) CLASS 10 EXCAVATION, ENGINEERING FABRIC, EROSION STONE AND REVETMENT. BERM ARMORING GENERALLY INCLUDES QUANTITIES TO THE FACE OF THE ABUTMENT.

5. WING ARMORING DETAILS ARE DEFINED BY THE BRIDGE OFFICE WING ARMORING STANDARD. FINAL DESIGN WILL CALCULATE QUANTITIES RELATED TO THE WING ARMORING.

EMBEDDED REVETMENT

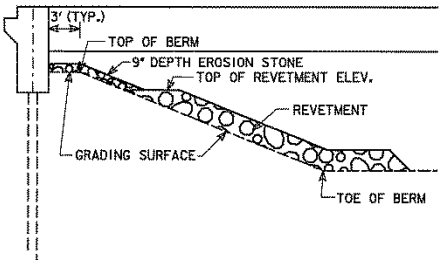

NOTES:

1. BSLT POINTS GIVEN AT GRADING SURFACE = BASE OF EROSION STONE AND BASE OF NON-EMBEDDED REVETMENT.

2. THE GRADING SURFACE SHALL BE LABELED ON THE TSL REVETMENT TYPICAL SECTION. TOP OF REVETMENT ELEVATION SHALL BE DEFINED.

3. ADDITIONAL EROSION STONE DETAILS ARE COVERED BY THE BRIDGE OFFICE SLOPE PROTECTION STANDARD.

4. THE BERM ARMORING QUANTITIES TABLE SHALL INCLUDE ENGINEERING FABRIC, EROSION STONE AND REVETMENT. BERM ARMORING QUANTITIES GENERALLY WILL INCLUDE ARMORING WORK UP TO THE FACE OF ABUTMENT.

5. WING ARMORING DETAILS ARE DEFINED BY THE BRIDGE OFFICE WING ARMORING STANDARD. FINAL DESIGN WILL CALCULATE QUANTITIES RELATED TO THE WING ARMORING.

REVETMENT (NOT EMBEDDED)

4-24-12

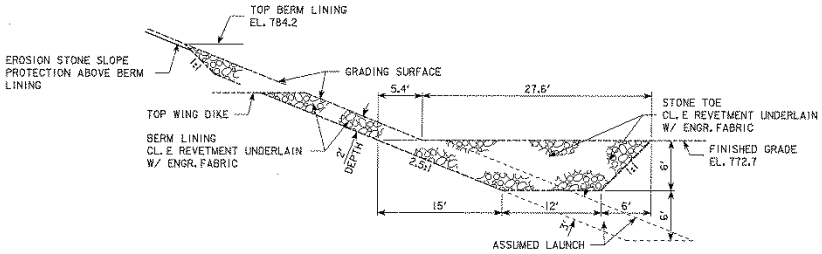

SECTION THROUGH STONE TOE AND BERM LINING

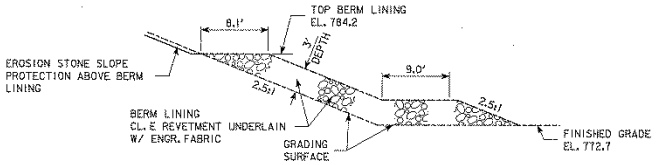

SECTION THROUGH STONE TOE AND BERM LINING

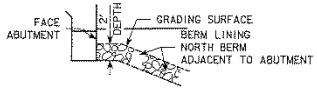

SECTION THROUGH BERM LINING AT ABUTMENT

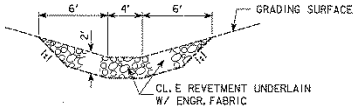

SECTION THROUGH ROCK FLUME

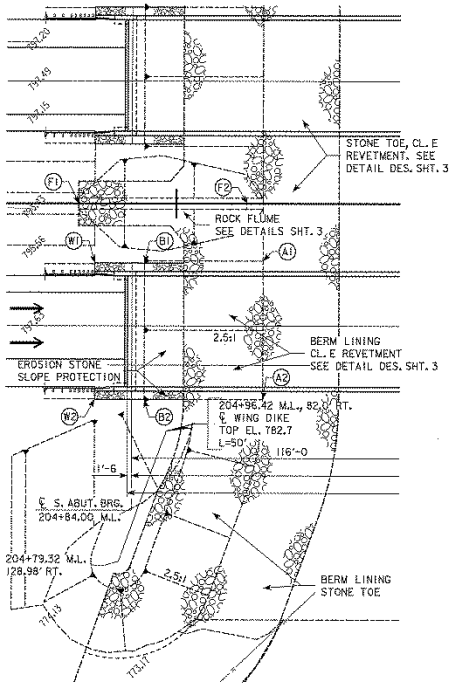

EXAMPLE SITUATION PLAN

REVETMENT QUANTITIES

REVETMENT TYPE - LOCATION	REVETMENT CL. E (TON)	EROSION STONE (TON)	ENGINEERING FABRIC (SY)	EXCAVATION (CY)
STONE TOE - SOUTH	3,944	-	2,010	2,465
STONE TOE - NORTH	3,856	-	1,965	2,410
BERM LINING - SOUTH (INCLUDES ROCK FLUME)	1,341	-	1,263	838
BERM LINING - NORTH	1,157	-	1,089	723
SLOPE PROTECTION - SOUTH	-	76	189	48
SLOPE PROTECTION - NORTH	-	9	22	6
TOTALS	10,298	85	6,538	6,490

REVETMENT EXCAVATION QUANTITY CALCULATED FROM GRADING SURFACE.

REVETMENT ESTIMATED AT 1.6 TON/CY

ROCK FLUME LAYOUT:

(F1) ℄ U/S END ROCK FLUME
204+64.5 M.L., 0.0' RT.
F.L. EL. 793.2

(F2) ℄ D/S END ROCK FLUME
205+25.5 M.L., 0.0' RT.
F.L. EL. 772.7

BERM SLOPE LOCATION TABLE - N.B. BRIDGE						
	S. ABUTMENT			N. ABUTMENT		
	STATION	OFFSET	ELEV	STATION	OFFSET	ELEV
A1	205+31.50	21.42' RT	772.70	209+23.23	21.42' RT	772.70
A2	205+31.50	70.58' RT	772.70	209+23.23	70.58' RT	772.70
B1	204+88.50	21.42' RT	789.90	209+45.50	21.42' RT	781.61
B2	204+88.50	70.58' RT	789.90	209+45.50	70.58' RT	781.61
W1	204+70.50	21.42' RT	796.50	209+63.50	21.42' RT	787.73
W2	204+70.50	70.58' RT	796.42	209+63.50	70.58' RT	787.65

W - END WING / EDGE EROSION STONE
BERM SLOPE/FLUME ELEVATIONS REFLECT GRADING SURFACE

EXAMPLE BSLT PLACED ON SITUATION PLAN

DESIGN FOR 0° SKEW
DUAL 466'-0 X 40'-0 PRETENSIONED
PRESTRESSED CONC. BEAM BRIDGES
118'-0 END SPANS 117'-0 INTERIOR SPANS
REVETMENT DETAILS
STATION: 207+17.00 M.L. MAR. 2012
POLK COUNTY
IOWA DEPARTMENT OF TRANSPORTATION - HIGHWAY DIVISION
DESIGN SHEET NO. 3 OF 5 FILE NO. 30582 DESIGN NO. 512

DESIGN TEAM | POLK COUNTY | PROJECT NUMBER NHSX-065-4(127)--3H-77 | SHEET NUMBER

13-JAN-2011 17:55 wkaufma W:\Highway\Bridge\PrelimSection\Concepts\BermGrading\Berm_Grading.str TSL_XX_XXXX_XX \\rtpprtsvr2\BrgPDF

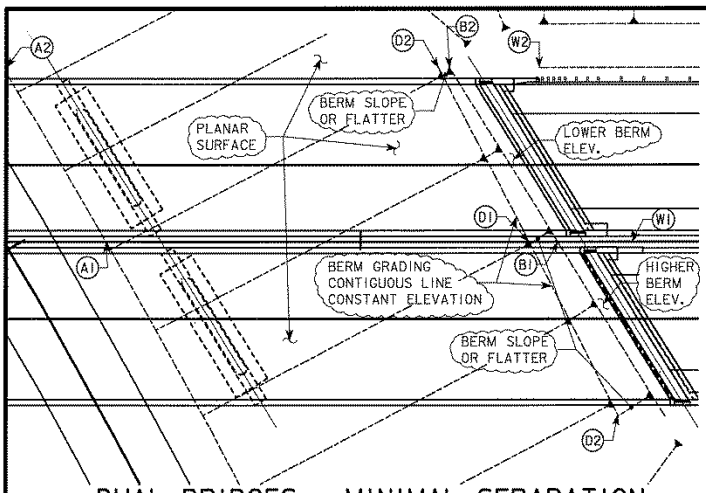

DUAL BRIDGES - MINIMAL SEPARATION

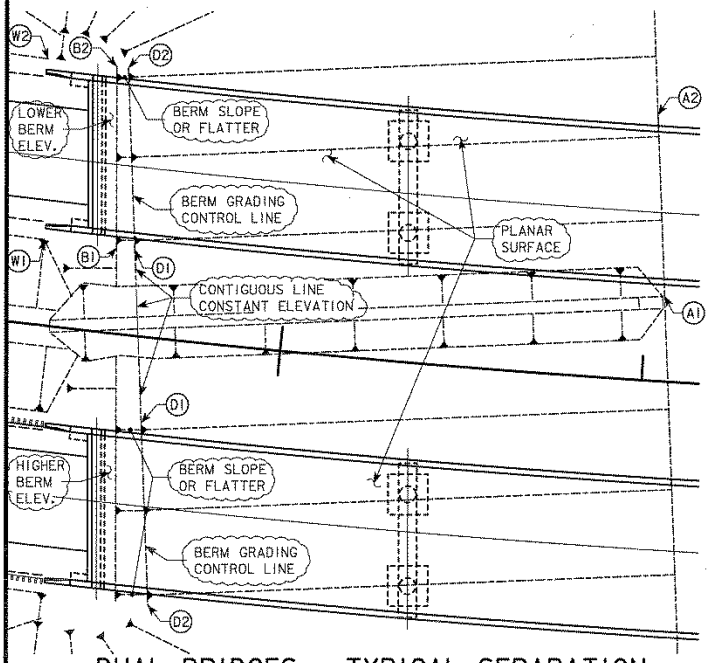

DUAL BRIDGES - TYPICAL SEPARATION

NOTES:

FOR DUAL BRIDGES A BERM GRADING CONTROL LINE WILL BE PROVIDED.

THE BERM GRADING CONTROL LINE IS A CONTIGUOUS LINE FROM 3 FT. BEYOND THE OUTSIDE BRIDGE FASCIA'S SET AT A CONSTANT ELEVATION. THE GRADING CONTROL LINE WILL RESULT IN A PLANAR BERM SURFACE BETWEEN AND UNDER THE BRIDGES.

FOR DUAL BRIDGES WHERE BOTH BERMS HAVE THE SAME ELEVATION AND THE EDGE OF THE 3 FT. BRIDGE BERM FORMS A CONTIGUOUS LINE OUT-OUT THE 'B' POINTS DEFINE THE BERM GRADING CONTROL LINE. FOR MOST DUAL BRIDGE SITES THIS CAN BE ACCOMPLISHED BY ADJUSTMENT OF THE LOW BRIDGE BERM AND/OR ELIMINATION OF A SLOPING BERM.

TO ATTAIN LEVEL/EQUAL BERM ELEVATIONS THE BERM CAN BE ELEVATED UP TO THE FOLLOWING LIMITS (ELEVATED FROM THE 2 FT. TYPICAL FROM BTM. FTG.):

INTEGRAL - 0.5 FT.
STUB - 0.75 FT.

THE PROVISIONS OF ARTICLE 3.2.7.2 (SLOPING OF ABUT. FOOTING/BERM) SHOULD BE REVIEWED FOR APPLICABILITY. THE PROVISIONS OF THE ABOVE ARTICLE SHALL GOVERN.

FOR SITES WHERE THE 'B' POINTS CANNOT BE ADJUSTED TO FORM A CONTIGUOUS LINE AT A CONSTANT ELEVATION, 'D' POINTS WILL BE UTILIZED TO DEFINE THE BERM GRADING CONTROL LINE.

THE CONTROL LINE WILL BE SET AT AN ELEVATION 1 FT. BELOW THE LOW BERM ELEVATION. THE ALIGNMENT WILL BE SET SUCH THAT THE SLOPE BETWEEN ADJACENT 'B' AND 'D' POINTS MATCHES OR IS FLATTER THAN THE BERM SLOPE BELOW THE GRADING CONTROL LINE.

BERM SLOPE LOCATION TABLE

POINTS	WEST ABUTMENT			EAST ABUTMENT		
	STATION	OFFSET	ELEV.	STATION	OFFSET	ELEV.
A1	891+04.80	23.40' LT	1200.80	895+34.10	23.40' LT	1200.80
A2	890+99.60	72.50' LT	1200.80	895+39.50	72.50' LT	1200.80
D1	889+57.40	23.40' LT	1249.28	896+70.50	23.40' LT	1245.70
D2	889+50.00	72.50' LT	1249.28	896+78.00	72.50' LT	1245.70
B1	889+52.25	23.40' LT	1250.28	896+76.00	23.40' LT	1246.70
B2	889+46.67	72.50' LT	1250.28	896+81.58	72.50' LT	1246.70
W1	889+32.20	23.40' LT	1257.74	896+96.05	23.40' LT	1254.17
W2	889+27.25	72.50' LT	1257.84	897+01.00	72.50' LT	1254.27

BERM SLOPE ELEVATIONS REFLECT THE GRADING SURFACE. BERM GRADING BELOW BERM GRADING CONTROL LINE DEFINED BY CONTROL LINE.
BERM GRADING CONTROL LINE IS DEFINED BY 'D' POINTS IN ABOVE TABLE.
[ALTERNATE NOTE FOR ABOVE WHEN 'D' POINTS NOT REQUIRED - SEE NOTES]
BERM GRADING CONTROL LINE IS DEFINED BY 'B' POINTS IN ABOVE TABLE.

DUAL BRIDGES
BERM SLOPE DEFINITION

REV. DATE: 5-01-13

C3.7.3.4 Recoverable berm location table

See also the BSLT example in C3.2.7.3.3.

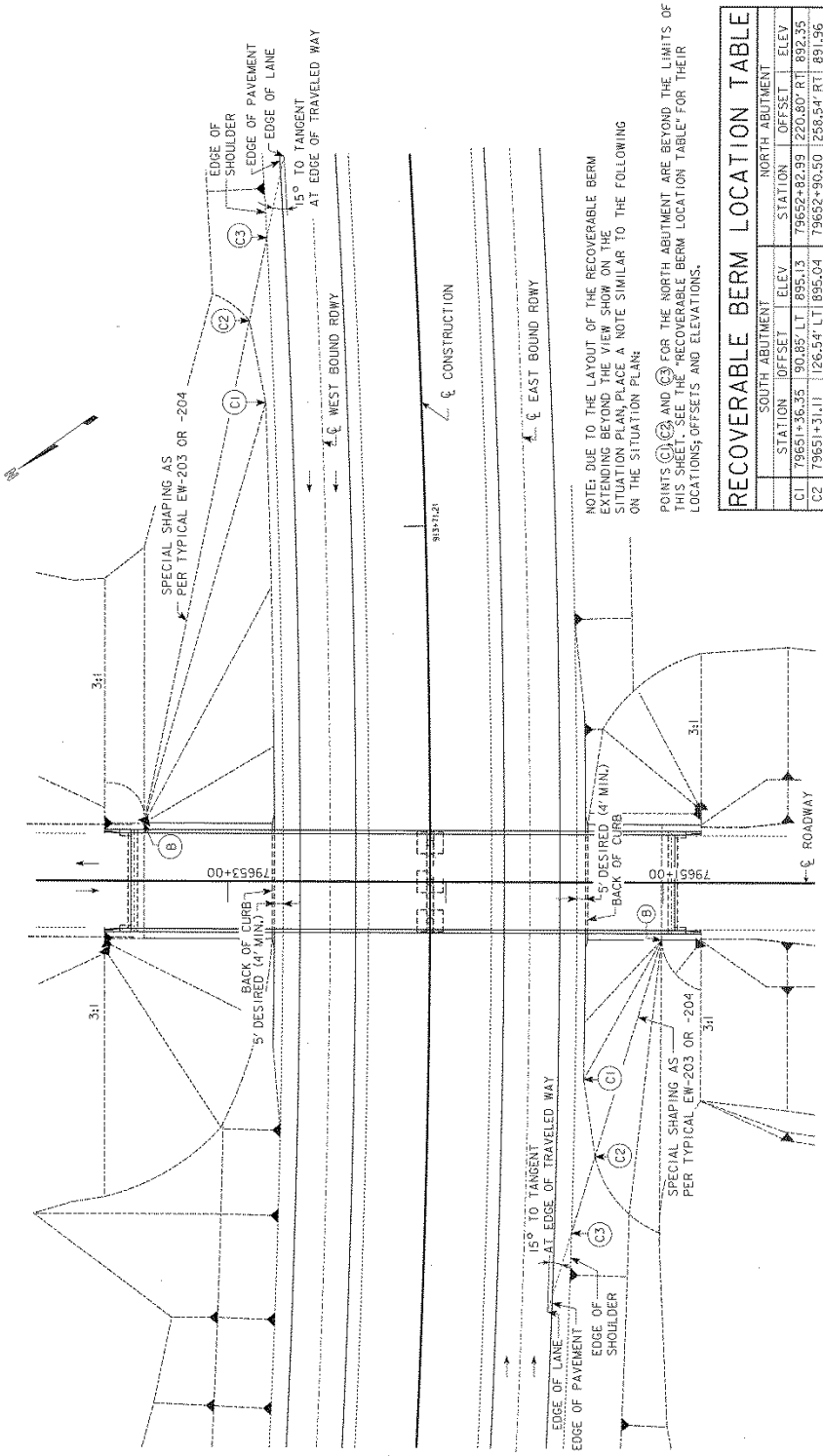

EXAMPLE RECOVERABLE BERM LOCATION TABLE (RBLT)

C3.7.3.5 Slope protection

C3.7.3.6 Grading control points

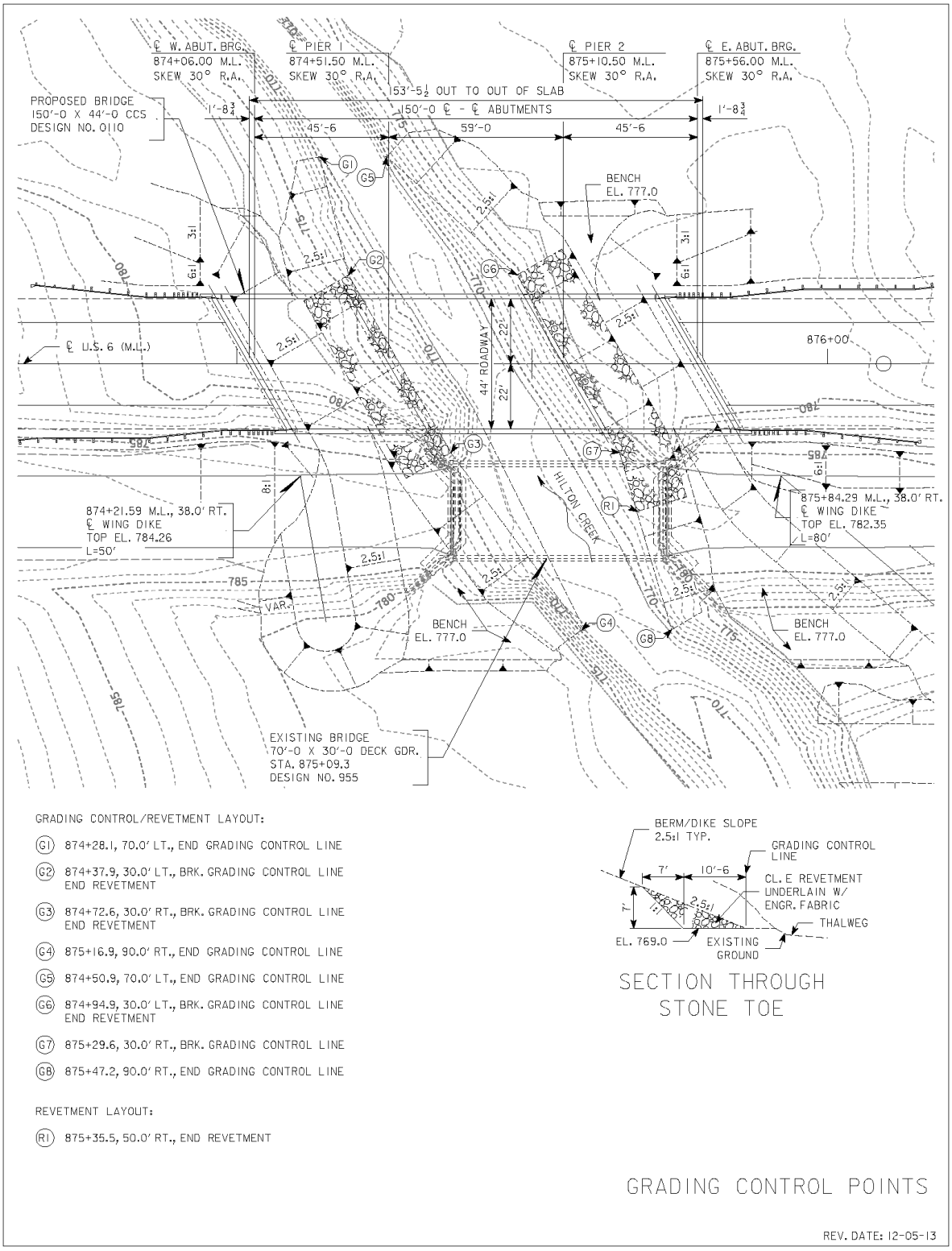

C3.7.3.7 Mechanically Stabilized Earth (MSE) Walls adjacent to abutments

C3.7.4 Piers and pier footings

C3.7.5 Wing walls

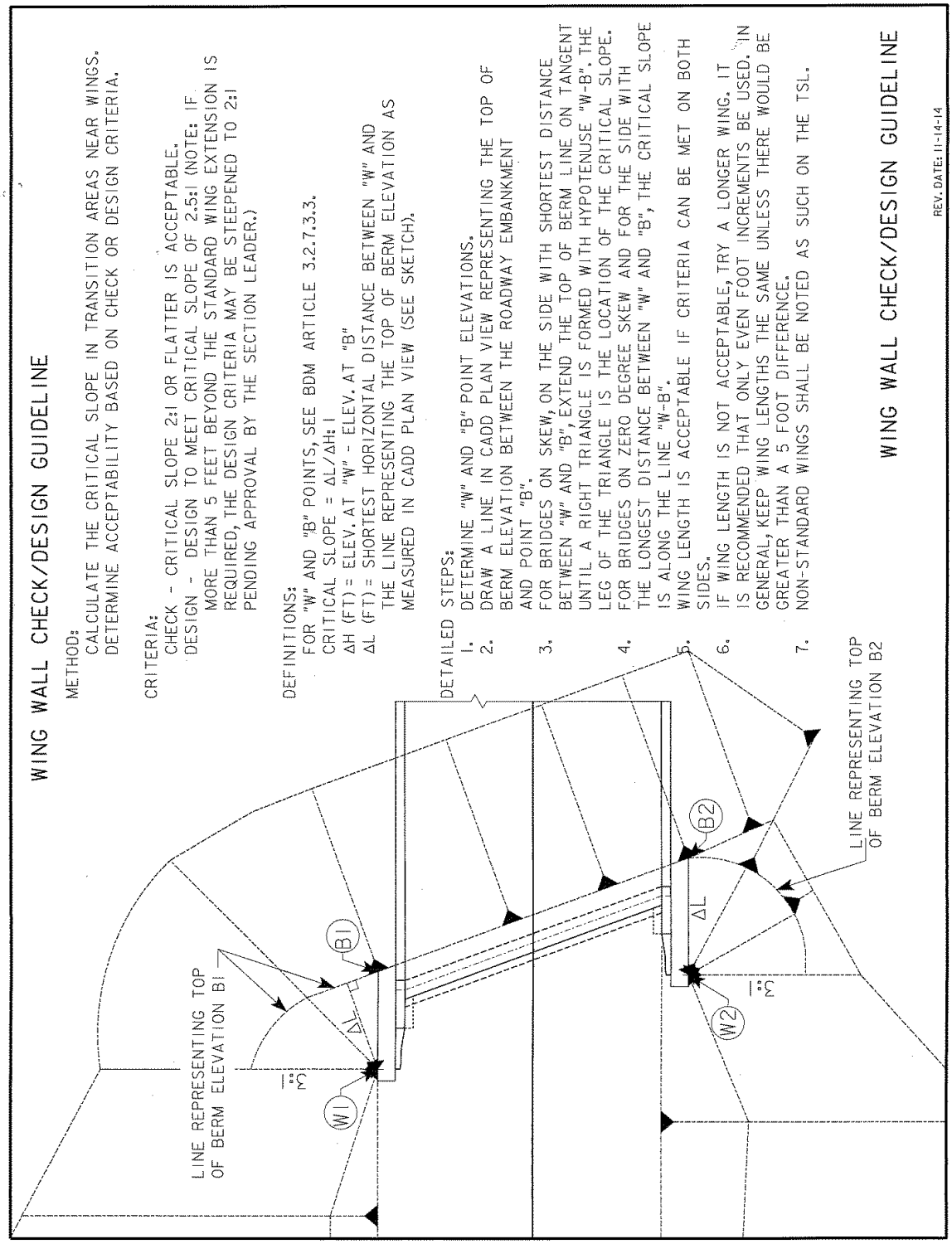

C3.7.6 Foundation Conflicts

C3.8 Cost estimates

C3.9 Type, Size, and Location (TS&L) plans

PRELIMINARY BRIDGE DESIGN
TS&L PLAN SHEET(S) LAYOUT GUIDELINES

Refer to the PLAN REVIEW CHECKLIST or PRELIMINARY DESIGN GUIDELINES available on the Bridge Web Site which include required information for the TS&L Plan sheet(s). The following guidelines are intended to provide consistency for placing information when additional plan sheet(s) are needed.

The first sheet shall show a typical bridge layout per guidelines and be labeled SITUATION PLAN below the plan view and in the title block.

Bridge sites typically have areas of interest such as stream meanders, interchanges, etc. which do not fit on a single Situation Plan sheet. To show these areas, a SITE PLAN sheet shall be created. This second plan sheet shall be labeled as SITE PLAN below the plan layout and the title block shall be labeled as SITUATION PLAN - SITE. The scale of the site plan layout may be changed (labeled with a Scale Bar) to adequately show conditions outside of the proposed structure area. Typically, the SITE PLAN shall be shown on one sheet. The SITE PLAN sheet may also be used to place information when insufficient room remains on the SITUATION PLAN sheet.

Any additional sheet(s) showing details or other preliminary information shall be labeled as MISCELLANEOUS DETAILS and the title block(s) should be labeled as SITUATION PLAN - MISC.

In general, additional plan sheets shall be created except for relatively small bridges where limited additional information is needed.

All items required by the PLAN REVIEW CHECKLIST or PRELIMINARY DESIGN GUIDELINES which are not listed in the mandatory or preferred item guidelines shall be placed at the designer's discretion. The designer shall follow the guidelines of the mandatory and preferred items listed for both situation plan layout and site plan layout sheets when placing information.

Topography is defined as information typically obtained from the project survey such as ground features and utilities, excluding ground shots and contours.

The mandatory items listed below shall be shown on the situation plan layout sheet(s).

<u>Mandatory Items for the Situation Plan layout sheet(s)</u>

1. Situation Plan
    - SITUATION PLAN heading under plan view layout
    - Dimensions of Proposed Structure(s)
    - North Arrow
    - Centerline Roadway Alignments and labels
    - Centerline Stationing labels
    - Profile Grade Line labels
    - Existing Structure(s) (A)
    - Revetment (A)
    - Slope Protection Note (A)
    - Guardrail Indicated

- Topography (A)
- Minimum Vertical Clearance Location (overhead bridges)
- Scale Bar
- Horizontal Clearance to Piers (overhead bridges)
- Existing Contours, supplemented with ground shots (A)
- Proposed Contours (A) (may supplement BSB terrain with proposed grading slope lines if desired to provide clarity of proposed berm grading)

2. Longitudinal Section
3. Typical Approach Section
4. Location Data (for consistency, place above the title block)
5. Survey Control Point

(A) These items to be edited as required prioritizing clarity of other mandatory items or text. More comprehensive treatment of these items can be made on the site plan sheet in cases where extensive editing is required on the situation plan layout sheet(s).

The preferred items listed are expected to be shown on the situation plan layout sheet(s) but due to space restrictions may be shown on the site plan layout sheet.

<u>Preferred Items for the Situation Plan layout sheet(s) (In order of preference)</u>

1. Proposed Grade
2. Hydraulic Data
3. Traffic Estimate
4. General Utilities Cell and Notes
5. Spiral Curve Data
6. Horizontal Curve Data
7. Minimum Vertical Clearance note
8. Staging Widths

The mandatory items listed below shall be shown on the site plan layout sheet. Some duplication is necessary for references between the multiple SITUATION PLAN sheets.

<u>Mandatory Items for the Site Plan layout sheet</u>

1. Site Plan
    - SITE PLAN heading under plan view layout
    - North Arrow
    - Centerline Roadway Alignments and labels
    - Centerline Stationing labels
    - Proposed Structure(s) (B)
    - Existing Structure(s) (B)
    - Existing Contours (B), supplemented with ground shots
    - Proposed Contours (B)
    - Revetment (B)
    - Guardrail Indicated
    - Topography (B)
    - Scale Bar
    - Beginning & End Bridge Stations at Centerline Abutment Bearings

(B) These items should not be edited extensively on the site plan layout sheet and a more comprehensive treatment of these items should be shown on this sheet where extensive editing may have been necessary on the situation plan layout sheet(s).

The preferred items listed are expected to be shown on the site plan layout sheet but due to space restrictions may be shown on the situation plan layout sheet(s).

<u>Preferred Items for the Site Plan layout sheet</u>

1. Berm Slope Location Table & Associated Point I.D. Labels (Show together on the sheet)
2. Revetment Limits & Typical Section Details

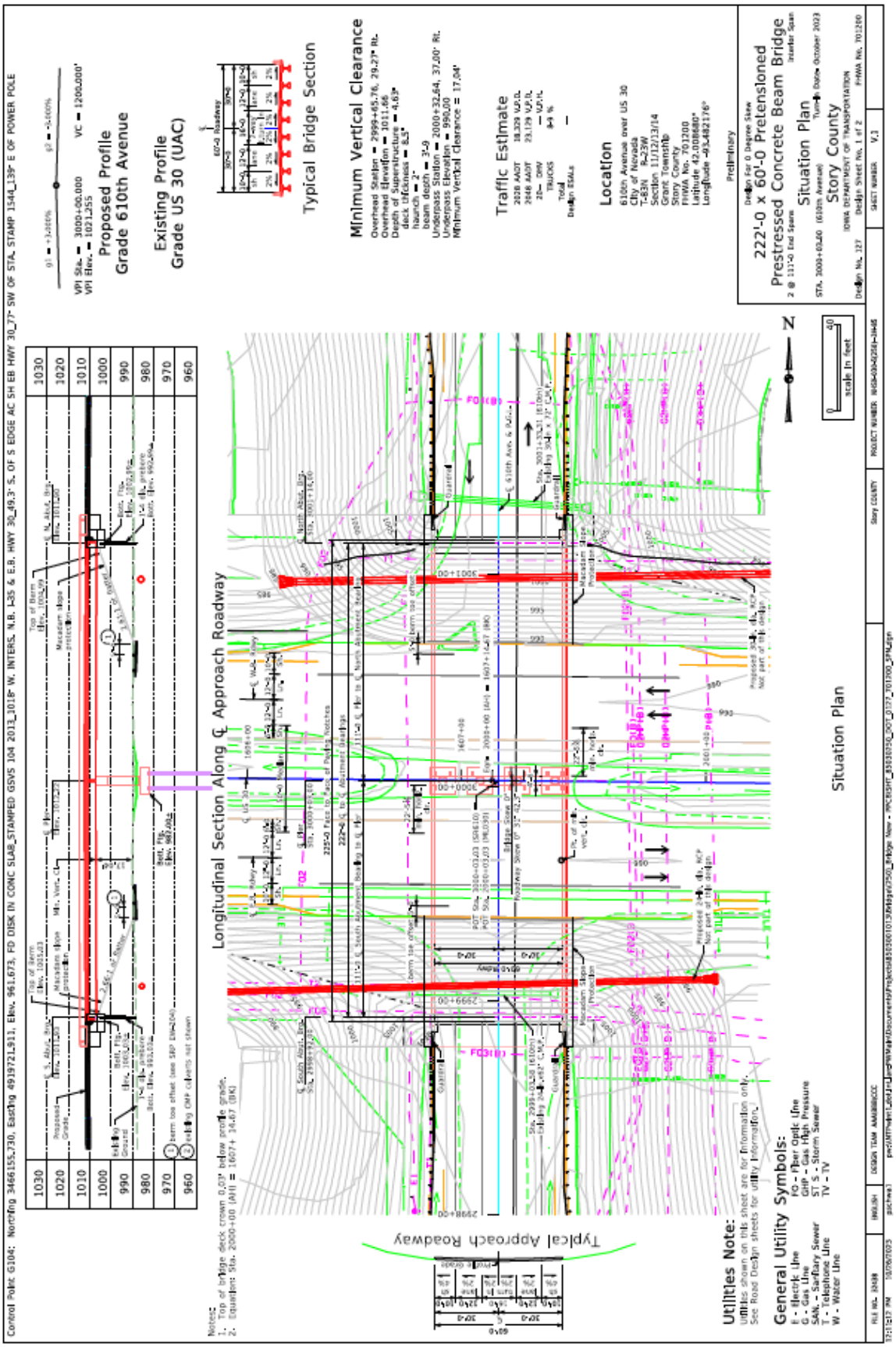
Proposed Profile
Grade 610th Avenue
Existing Profile
Grade US 30 (UAC)
Typical Bridge Section
Minimum Vertical Clearance
Traffic Estimate
Location
222'-0 x 60'-0 Prestressed Concrete Beam Bridge
Situation Plan
Story County
Longitudinal Section Along ℄ Approach Roadway
Typical Approach Roadway
Situation Plan
Utilities Note:
General Utility Symbols:

Control Point G104: Northing 3466155.730, Easting 4919721.911, Elev. 961.673, FD DISK IN CONC SLAB_STAMPED GSVS 104 2013_1018' W. INTERS. NJB. I-35 & E.B. HWY 30_49.3' S. OF S EDGE AC SH EB HWY 30_77' SW OF STA. STAMP 1544_139' E OF POWER POLE

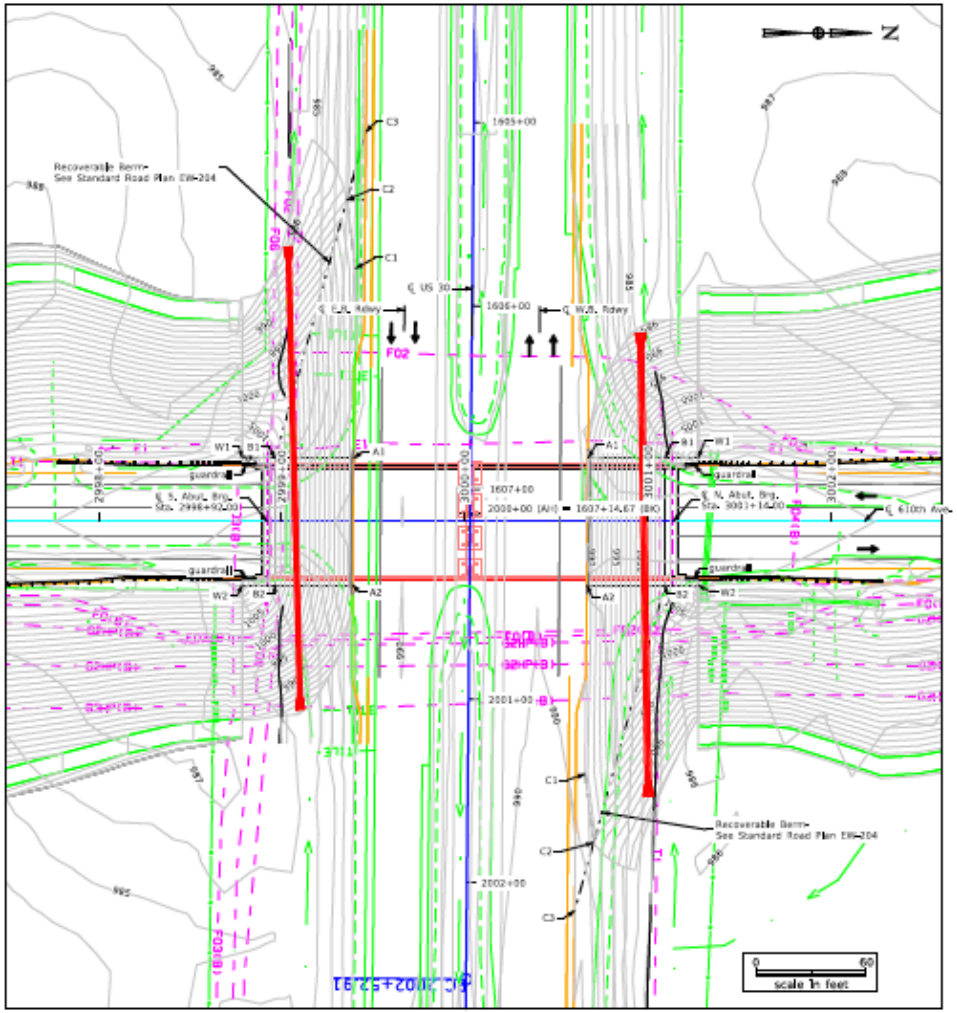

Site Plan

Berm Slope Location Table

Points	South Abutment			North Abutment		
	Station	Offset	Elev.	Station	Offset	Elev.
A1	2999+39.35	34.58' Lt.	989.18	3000+67.35	34.58' Lt.	988.87
A2	2999+38.71	34.58' Rt.	989.18	3000+66.71	34.58' Rt.	989.06
B1	2998+96.50	34.58' Lt.	1005.03	3001+09.50	34.58' Lt.	1004.99
B2	2998+96.50	34.58' Rt.	1005.03	3001+09.50	34.58' Rt.	1004.99
W1	2998+78.50	34.58' Lt.	1011.14	3001+27.50	34.58' Lt.	1011.10
W2	2998+78.50	34.58' Rt.	1011.14	3001+27.50	34.58' Rt.	1011.10

Berm slope elevations reflect the grading surface.

Recoverable Berm Location Table

Points	South Abutment			North Abutment		
	Station	Offset	Elev.	Station	Offset	Elev.
C1	2999+40.30	138.30 Lt.	989.11	3000+65.76	137.87' Rt.	989.62
C2	2999+35.65	175.47' Lt.	988.79	3000+70.42	175.24' Rt.	989.62
C3	2999+45.99	212.70' Lt.	989.21	3000+60.07	212.47' Rt.	990.24
B	2998+96.50	34.58' Lt.	1005.03	3001+09.50	34.58' Rt.	1004.99

Refer to Standard Road Plan EW-204.

General Notes (to be incorporated into the General Notes of the final plan set):

1. This design is for the construction of a new overhead bridge as part of a proposed interchange at 610th Avenue in Story County.

Designer Notes (final designer shall delete these notes):

1. Bridge aesthetics to be incorporated during final design. Aesthetic design will complement the treatments at the Co. Rd. S14 bridge over US 30 including surface rustication at frame pier cap and columns, abutment wingwalls and barrier outside faces. Fascia beams may include paint coating. Consult the BSB Methods unit for details.

2. Single slope TL-4 barrier rail proposed.

3. Assumed frame pier with = 4'-6 width (4' Columns, 4'-6 caps). Design aspects of the pier including number of columns, pilings, geometry, etc. to be determined/verified during final design.

4. The Pier is located within the acceptable clear zone of 30 feet. Collision requirements shall be evaluated during final design.

5. Final Design shall consider the need for temporary shoring and include in the final plans as necessary. Conceptual temporary shoring is not shown, but it will be a final design task to consider any extent and plan needs.

6. The final designer shall review the interchange construction staging and determine if there are any potential impacts to be considered relative to the bridge design.

Plan Notes:

1. 2-span grading shown (See EW-204- 5' offset)

Preliminary

Design For 0 Degree Skew
222'-0 x 60'-0 Pretensioned
Prestressed Concrete Beam Bridge

Situation Plan - Site
STA. 3000+03.00 (610th Avenue) Turn-In Date: October 2023
Story County
IOWA DEPARTMENT OF TRANSPORTATION
Design No. 127 Design Sheet No. 2 of 2 FHWA/Asset 701200

FILE NO. 32488	ENGLISH	DESIGN TEAM AAABBBCCC	Story COUNTY	PROJECT NUMBER NHSB-030-5(256)--3H48	SHEET NUMBER V.2

7:28:30 PM 10/06/2023 gschwal pw:\\MTPwint1.dot.int.lan:PWMain\Documents\Projects\85030001013\Bridge\0500_Bridge New - PRCBSHT_85030050_DOT_0127_701200_SPM.dgn

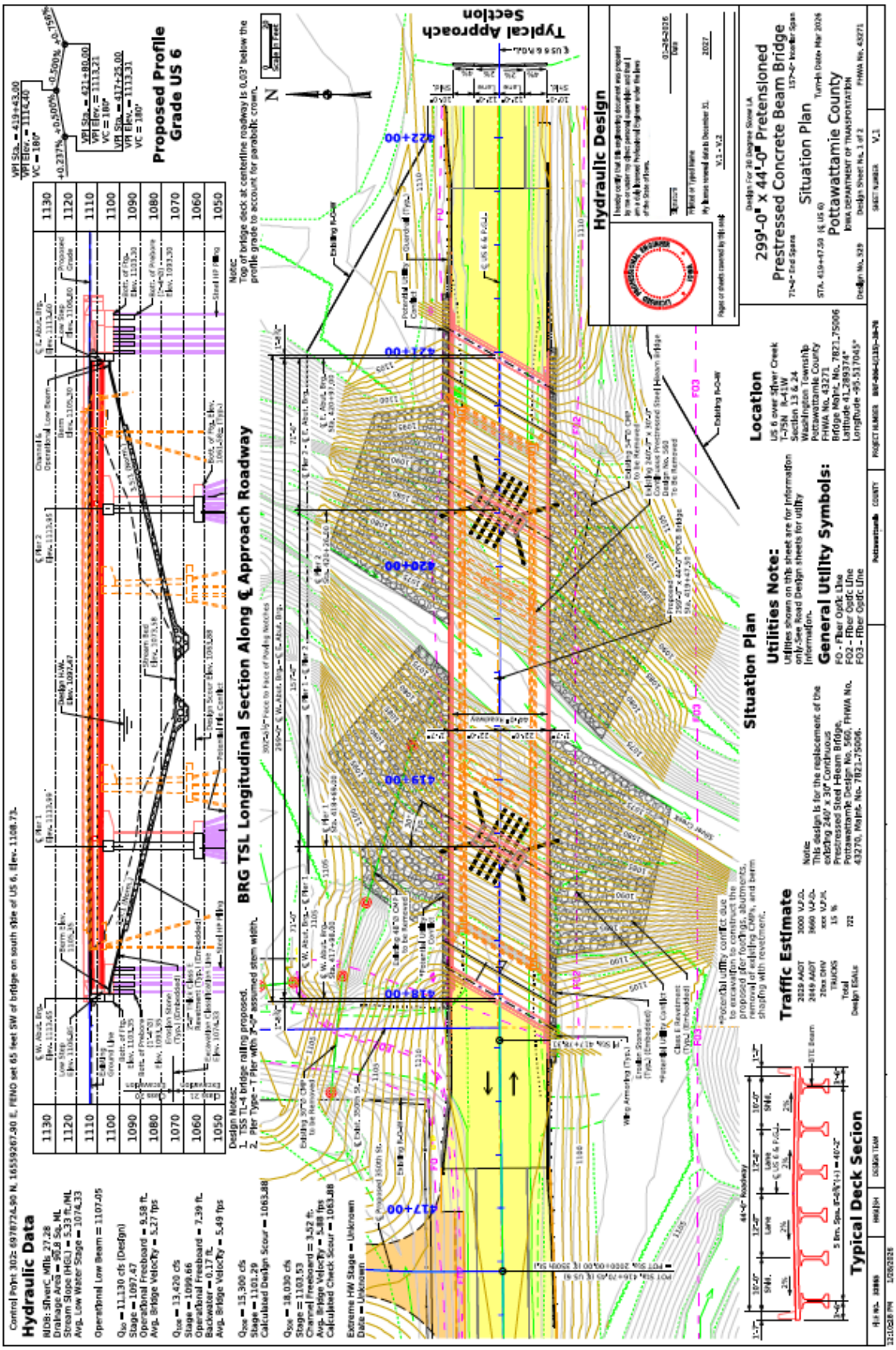
Hydraulic Data
Proposed Profile Grade US 6
BRG TSL Longitudinal Section Along ℄ Approach Roadway
Typical Approach Section
Hydraulic Design
299'-0" x 44'-0" Prestressed Concrete Beam Bridge
Situation Plan
Pottawattamie County
Location
Utilities Note:
General Utility Symbols:
Situation Plan
Traffic Estimate
Typical Deck Secion

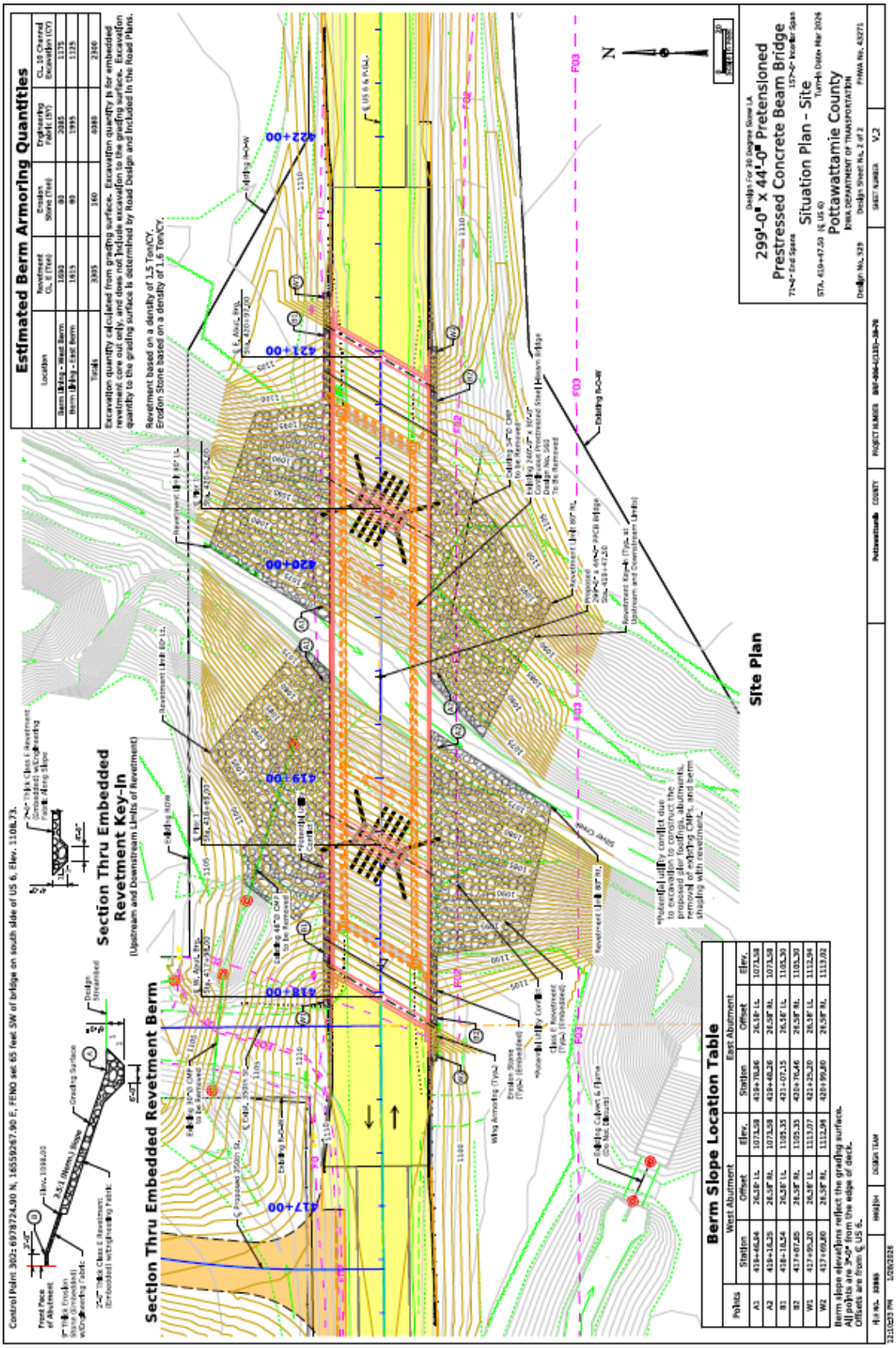
Estimated Berm Armoring Quantities
Location
Revetment CL ℄ (Ton)
Erosion Stone (Ton)
Engineering Fabric (SY)
CL 10 Channel Excavation (CY)
Berm (Bldg - West Berm
1692
83
2885
1175
Berm (Bldg - East Berm
1613
83
1995
1125
Totals
3305
160
4880
2300
Excavation quantity calculated from grading surface. Excavation quantity is for embedded revetment core cut only, and does not include excavation to the grading surface. Excavation quantity to the grading surface is determined by Road Design and included in the Road Plans.
Revetment based on a density of 1.5 Ton/CY.
Erosion Stone based on a density of 1.6 Ton/CY.
Section Thru Embedded Revetment Berm
Section Thru Embedded Revetment Key-In
(Upstream and Downstream Limits of Revetment)
Site Plan
Berm Slope Location Table
Points
West Abutment
Station
Offset
Elev.
East Abutment
Station
Offset
Elev.
A1 419+66.64 26.58' LL 1073.58 419+78.46 26.58' LL 1073.58
A2 419+16.25 26.58' RL 1073.58 419+48.26 26.58' RL 1073.58
B1 418+18.54 26.58' LL 1105.35 421+07.15 26.58' LL 1105.30
B2 417+67.85 26.58' RL 1105.35 420+76.46 26.58' RL 1105.30
W1 417+95.20 26.58' LL 1113.07 421+25.20 26.58' LL 1113.04
W2 417+69.80 26.58' RL 1112.99 420+99.80 26.58' RL 1113.02
Berm slope elevations reflect the grading surface.
All points are 3'-0" from the edge of deck.
Offsets are from ℄ US 6.
299'-0" x 44'-0" Prestressed Concrete Beam Bridge
Situation Plan - Site
Pottawattamie County
IOWA DEPARTMENT OF TRANSPORTATION
Design Sheet No. 2 of 2
FHWA No. 43271
Design No. 529
SHEET NUMBER V-2
Pottawattamie
COUNTY
PROJECT NUMBER BRF-006-6(135)--38-78
DESIGN TEAM
HEIGHT
Control Point 302: 6978724.90 N, 1655926?.90 E, FENO set 65 feet SW of bridge on south side of US 6, Elev. 1108.73.
Potential utility conflict due to excavation to construct the proposed pier footings, abutments, removal of existing CMPs, and berm shaping with revetments.
Existing Culvert & Flume (Not Shown)
Wing Armoring (Typ.)
Erosion Stone (Typ.) (Embedded)
Existing Culvert (Not Shown)
Existing Culvert (Not Shown)
Existing Culvert (Not Shown

C3.10 Permits and approvals

C3.10.1 Waterway

Department of Natural Resources List of Meandered Streams
22 December 2006

Iowa Department of Natural Resources Sovereign Lands Construction Permits are required for work on or over meandered streams. (This is a different permit than a Floodplain Development Permit.) The term "meandered stream" for this permit is a legal description where the State of Iowa owns the stream bed and banks of certain reaches of rivers. A meandered stream is one which at the time of the original government survey was so surveyed as to mark, plat and compute acreage of adjacent fractional sections. DNR is responsible for this state-owned land and therefore issues a Construction Permit. The following is a list of the descriptions of the limits of these rivers in the state of Iowa.

1. Des Moines River. From Mississippi River to the junction of the east and west branches. The west branch to west line T95N, R32W, Palo Alto County, due south of Emmetsburg. The east branch to north line T95N, R29W, Kossuth County, near the north edge of Algona.

2. Iowa River. From Mississippi River to west line T81N, R11W, Iowa County, due north of Ladora.

3. Cedar River. From Iowa River to west line T89N, R13W, Black Hawk County, at the east edge of Cedar Falls.

4. Raccoon River. From Des Moines River to west line of Polk County.

5. Wapsipinicon River. From Mississippi River to west line T86N, R6W, Linn County northwest of Central City.

6. Maquoketa River. From Mississippi River to west line T84N, R3E Jackson County, due north of Maquoketa.

7. Skunk River. From Mississippi River to north line of Jefferson County, at the southwest edge of Coppock.

8. Turkey River. From Mississippi River to west line T95N, R7W, Fayette County, northwest of Clermont.

9. Nishnabotna River. From Missouri River to north line T67N, R42W, Fremont County, northeast of Hamburg.

10. Upper Iowa River. From Mississippi River to west line Section 28, T100N, R4W, Allamakee County, about two and one-half miles upstream from its mouth.

11. Little Maquoketa River. From Mississippi River to west line Section 35, T90N, R2E, Dubuque County, about one mile upstream from its mouth.

12. Mississippi River, Missouri River, Big Sioux River.

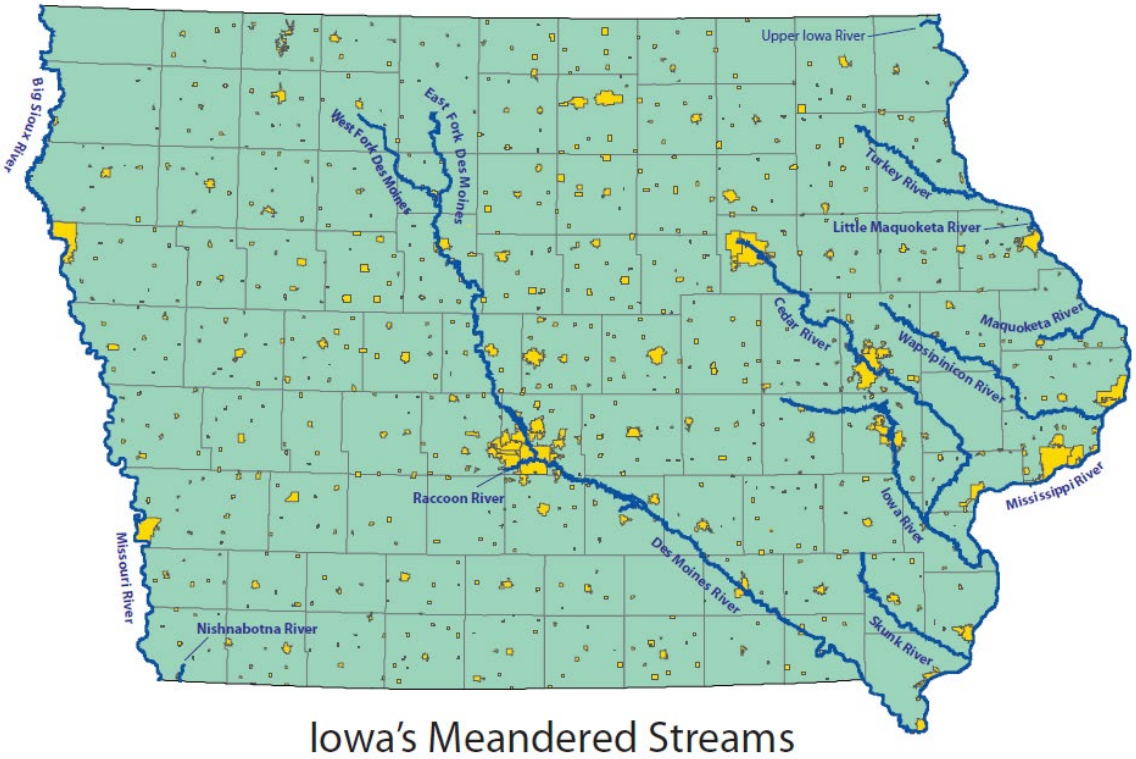

C3.10.2 Railroad

C3.10.3 Highway

C3.11 Forms

Examples of forms to follow:

Bridge Cost Estimate for Concept Statement

Location:

County: Lucas
Proj. No.: BRF-014-2(34)--38-59
Des. No.: 1054
Pin No.: 09-59-014-010
Maint. No.: 5927.3S014
FHWA No.: 34460
On IA 14 over English Creek
Sta.: 502+19.1
Section 13,T73N,R21W
Functional Class:
ADT: 2580 vpd
By: D. Claman
Date: 5/17/2010

Existing Bridge:

Type: I-Beam
Length x Width: 60' x 30'
Pier Type: N/A
Abut. Type: Stub
Spans: 60
Approach Pavement Width: 30
Skew: 0
Design Loading:
Drainage Area: 7.8 sq. mi.
Existing Bridge Width Acceptable: No
New/Reconstructed Roadway Width: 44.0'
Repair/Remodel by Staging Traffic: Yes

General Comments: Existing bridge is a 4-beam single span structure that could be staged. Stage 1 lane width would be 15' wide and Stage 2 lane width would be approximately 12 feet wide with an additional 2' wide bridge. Staging a slab bridge may create constructability issues due to deflection and false-work.

Option A - Stage 110' x 46' CCS Bridge

Type: CCS
Length x Width: 110' x 46'
Pier Type: Pile Bent
Abutment Type: Integral
Spans: 1 @ 35', 2@27.5'
Skew: 0.0
Stage Traffic: Yes, One 15' Lane - Stage 1, One 12' Lane - Stage 2

Costs:

Bridge - 110' x 46' @ $75/sf	= $ 379,500
Remove Exist. Bridge -60' x 30' @ $7.00/sf	= $ 12,600
Riprap Berms	= $ 50,000
Staged Construction (10%)	= $ 44,210
Mobilization (10%)	= $ 44,210
Contingency (15%)	= $ 66,315
	========
Total Option A	$ 596,835

Comments: Staged CCS bridges may have constructability issues depending upon the contractor.

Page 1 of 2

Bridge Concept Statement 4/12/2011

Lucas County
BRF-014-2(34)—38-59

Option B - 110' x 44' CCS Bridge - Detour

Type: CCS
Length x Width: 110' x 44'
Pier Type: Pile Bent
Abutment Type: Integral
Spans: 1@35.0, 2@ 27.5'
Skew: 0.0
Stage Traffic: No
Costs:

Bridge - 110' x 44' @ $75/sf	= $ 363,000
Remove Exist. Bridge 60' x 30' @ $7.00/sf	= $ 12,600
Riprap Berms	= $ 50,000
Mobilization (10%)	= $ 42,560
Contingency (15%)	= $ 63,840
	========
Total Option B	$ 532,000

Comments: Detour reduces construction time and eliminates constructability issues staging slab bridges.

Revisions:
None

Page 2 of 2

Bridges and Structures Bureau Attachment for Concept Statement

Date: August 1, 2026
By: John Q. Engineer
Location: U.S. 65 over East Branch Beaverdam Creek

County: Cerro Gordo
Phase No.: BRFN-065-8(68)—39-17
Project Code: 17-17-065-010

1. Regulatory/Coordination
   a. US Army Corps of Engineers Section 408 approval (B05) = No
   b. State (DNR) Flood Plain and/or Sovereign Lands permit for Meandered Stream or Lake (B06) = No
   c. State (DNR) Sovereign Lands permit for ROW (B07) = No
   d. Flood Insurance Study = Yes. Zone A Panel 19033C0275C, May 16, 2012
   e. Iowa DOT Local Record of Coordination – Flood Plain Development (B08) = Yes
   f. Drainage District Approval (B09) = No (March 2012 D.D. Map prepared by Cerro Gordo County Auditor's Office)
   g. National Flood Insurance Program (NFIP)- Map Revision (CLOMR/LOMR) (B10/B11) = No
   h. Iowa State Water Trail or Paddling Route = No
   i. Historic Structure = No
   j. Federally owned land in vicinity (includes NRCS easements) = No
   k. USGS or Iowa Flood Center (IFC) gage or sensor impacted = No
   l. Obstruction Evaluation/Airport Airspace Analysis per FAA website = No

2. Hydrologic/Hydraulic Analysis/RIDB Dataset
   a. Design discharges determined/methodology = Yes (USGS 13-5086)
   b. Hydraulic analysis done = No (2D model recommended)
   c. Riverine Infrastructure Database (RIDB) = Yes, an RIDB dataset will be developed as part of this project. The RIDB network location is BeaverdamC_EB_Cer_9.9.
   d. Project development hydraulic analysis will comply with the RIDB Guidelines at a minimum.

3. Structure/Roadway Layout Considerations
   a. A grade raise of 0.3-0.6' will keep low beam at the same level as existing. Recommend the maximum possible roadway profile grade raise that can be obtained within the approach roadway.
   b. A slight channel shift is considered to center the channel within the bridge.

4. Special construction issues
   a. Shallow bedrock may require consideration of wall piers with spread footing on rock in lieu of pile bent piers.
   b. It is desirable for new structure foundations to avoid existing foundations when possible.

5. Special survey = Yes. See below.
6. Aesthetic enhancements = No.
7. Other
   a. The roadway will be closed during construction with traffic placed on an off-site detour.
   b. Use of wing dikes on the north side was reviewed and not carried forward due to ground geometry upstream of the bridge.

Special Survey:

We request the following in addition to the routine survey data-

A. Lowest ground and floor elevations for the 3 agricultural structures located on the north side of 170th Street and west of U.S. 65 (upstream of the project). A description of the contents within the buildings is also requested to determine level of damage potential.
   Link to KMZ =
   Survey 3 Ag Buildings Upstream of U.S. 65 MP86.3 Bridge Replacement.kmz

B. Survey of the quad culvert downstream of the bridge on Pheasant Ave. (For each barrel:
   a. rise and span
   b. structure headwall inlet and outlet flowlines
   c. obvert
   d. if silted record silted thalweg in addition to structure flowline.
   e. Observation top of parapet at facia.

   Link to KMZ =
   Survey County Quad RCB.kmz

C. Roadway centerline profile on U.S. 65 between B55 (170th Street) and the project location capturing the low roadway overtopping elevation at the low point.

D. Roadway centerline profile on B55 (170th Street) between the 3 Agricultural buildings and proceeding to the intersection with U.S. 65.

Form 621004wd
06-95

Iowa Department of Transportation

EXAMPLE

FIELD NOTES FOR BRIDGES AND LARGE CULVERTS (20' SPAN)
PRIMARY ROAD SYSTEM

LOCATION

1. County Boone Civil Twp. Worth Sec. 21 Twp. 83N Range 26W
2. Over (☐River, ☒Cr., ☐Dr. Ditch) Peese Creek Highway No. Oriole Road
3. Proj. No. ER-624-0(8)--28-08 Sta. Pres. Struct. 8+28.00 Aerial Map No. _____
   Sta. Prop. Struct. 8+28.00

GENERAL DATA (FIELD)

4. Drainage Area 8.75 sq-mi Character Hilly to flat Approx. length and width 4.8 mi. x 2.8 mi
5. Extreme highwater: Date of occurrence 1993 Information from Ledges State Park Flood Pole
   (Elev. near site 892.5 Location STA 6+47.21, RT 152.27') (Elev. Upstream _____
   Location _____) (Elev. downstream _____ Location _____)
6. Typical highwater: Elev. 863.5 Occurs every 2 Years. Date of last occurrence Unknown
7. Average low water: (Elev. at site 862.47 Average streambed 862.27) (Water elev. 862.47 on date of survey 12/10/2010)
   (Water elev. 865.52 upstream 582 Ft.) (Water elev. 858.31 downstream 494 Ft.) Fall in stream 35.38 Ft./mi.
8. List buildings in flood plain None Location _____ Floor Elev. _____
9. Upstream Land Use State Park Anticipate any Change? No
10. Is stream deepening or filling? Filling Approx. amount per year Unknown
11. Is stream widening? No Show direction, rate and amount)
12. Does stream carry appreciable amount of ice? No Elev. Of high ice _____
13. Does stream carry appreciable amount of large driftwood? Yes
14. Bench Mark No. BM503 RR Spike in West Face of Flood Pole Northwest of G001 STA 6+47.21, RT. 152.27'

PRESENT OR OLD STRUCTURE

15. Superstructure: Type Dual 20.5' x 7.25' Aluminum Box Culvert Skew angle 27.42° L.A.
16. Substructure: Type N/A
17. Span lengths N/A Roadway width 22' Type of floor N/A
18. Culvert: Span 20.5' Ht. 7.25' Length B-B Ppts. 59' Flowline Lt. 859.0 Rt. 859.0
19. Grade elev. 868.0 Date built 2000 IDOT Design No. SP-624-0(5)--7C-06
20. Condition of superstructure Damaged beyond repair
21. Condition of substructure _____
22. Remarks: Existing dual culverts damaged beyond repair from August 2010 flood.

PROPOSED STRUCTURE (OFFICE)

23. Superstructure: Type 120' x 30' Continuous Concrete Slab Bridge Skew angle 30° L.A.
24. Substructure: Type P10L, Integral Abutments
25. Span lengths (Bridge): 36.5', 47.0',36.5' Culvert B-B Ppts. _____
26. Culvert: Span _____ Ht. _____ Flowline Lt. _____ Rt. _____ Length Lt. _____ Rt. _____
27. Roadway width 30' Type of floor Concrete Class of loading HL-93
28. Type of railing TL-4, Open Rail Option Type of curb _____
29. Grade elev. 871.96 Abut. Footing elev. 865.66 Pier footing elev. 858.25
30. Length and type of pilings: Abuts. HP10x42 - 45' Piers HP10x42 - 50' (P1), 55' (P2)
31. Design highwater: Elev. 867.00 Frequency 50 Year Area 8.75 sq-mi Discharge 2,272 cfs
32. What provision is made for overflow? None
33. Can channel be cleared to provide more waterway? No Are wing dikes to be provided? No
34. Is excessive local scour probable? No Probable max. depth of scour below streambed 4.40 ft.
35. Disposition of existing structure Remove
36. 2007 ADT = 530 VPD
37. Remarks: _____

County Boone
Project. No. ER-624-0(8)--28-08
File No. 30586 PIN 11-08-624-010
Design No. 211 Maint. No. 0800.3S624

Field Notes by Adam Bullerman, P.E. Date 2-25-11

Title Project Engineer

(over)

EXAMPLE

VALLEY CROSS SECTION DATA

The submittal of a bridge type structure will include a right angle valley section. This section should be taken downstream from the crossing. It shall be noted whether it is an average section or a control section. Enough ground shots will be taken to outline the valley to an elevation well above extreme highwater. Special care will be taken to accurately outline the main channel. Each shot should be identified; that is (FP) flood plain, (TB) top of bank, (ES) edge of stream, etc. Mannings equation roughness factors will be assigned each shot. Include site photos with this information.

Remarks: Refer to HEC-RAS model for valley cross section data

Distance	Elevation	(N) Roughness	Remarks

Distance	Elevation	(N) Roughness	Remarks

PLAT OF DRAINAGE AREA

The drainage area is to be platted as completely and accurately as possible and to the largest practicable scale on a separate sheet. Use a definite scale, as 1" equals ¼, ½, 1 or 2 miles, and indicate what scale has been used. In addition to the outlines of the watershed, indicate the positions of the streams and, roughly, the character of the soil and the relative locations of the steep and flat portions. Whenever practicable, the above information should be secured by going over the area either on foot or in a car. For most watersheds the information may be secured from the best existing data, soil maps, U.S.G.S. maps and Bulletin No. 7-1.H.R.B. No plat is necessary if the area is listed in Bulletin Number 7.

Remarks:

Give additional information by reference to marginal number on reverse side of this sheet.

Marginal No.	
5	Extreme highwater due to backwater from Saylorville Lake
10	Excessive silt deposition at this site is due to backwater from Saylorville Lake
18	Culvert flowline data based on construction plans since flow-line data could not be obtained due to culvert damage

IMPORTANT NOTE

The information given on this form must in all cases be supplemented by complete plat and profile of the site, drawn to a convenient scale on a separate sheet.

The information as shown on this form is essential and must be supplied in detail before the plans can be prepared or approved. It will be necessary to return this form for correction unless the data supplied is complete.

C3.12 Noise walls

Excerpts from AASHTO LRFD Bridge Design Specifications, 8th Edition, Section 15: Design of Sound Barriers, Copyright 2017, by the American Association of State Highway and Transportation Officials, Washington, DC. Used by permission:

15.8.3—Earth Load

The provisions of Article 3.11 shall apply.

The possibility of difference between the actual finished grade and that shown on the contract documents should be considered in the design.

C15.8.3

Article 3.11.5.10 contains specific requirements for the determination of earth pressure on sound barrier foundation components.

Soil build-up against sound barriers has been observed in some locations. Owners may determine the earth loads for the worst load case assuming an allowance in the finished grade elevation.

15.8.4—Vehicular Collision Forces

Sound barrier systems consisting of a traffic railing and a sound barrier that have been successfully crash-tested may be used with no further analysis.

The depth of aesthetic treatments into the traffic face of sound barrier that may be subjected to vehicular collision shall be kept to a minimum.

Sound barrier materials shall be selected to limit shattering of the sound barrier during vehicular collision.

In lieu of crash-testing, the resistance of components and connections to Extreme Event II force effects may be determined based on a controlled failure scenario with a load path and sacrificial elements selected to ensure desirable performance of a structural system containing the soundwall. Vehicular collision forces shall be applied to sound barriers located within the clear zone as follows:

Case 1: For sound barriers on a crashworthy traffic railing and for sound barriers mounted behind a crashworthy traffic railing with a sound barrier setback no more than 1.0 ft: vehicular collision forces specified in Section 13 shall be applied to the sound barrier at a point 4.0 ft above the surface of the pavement in front of the traffic railing for Test Levels 3 and lower and 6.0 ft above the surface of the pavement in front of the traffic railing for Test Levels 4 and higher.

Case 2: For sound barriers behind a crashworthy traffic railing with a sound barrier setback of 4.0 ft: vehicular collision force of 4.0 kips shall be

C15.8.4

Minimizing the depth of aesthetic treatment into the traffic face of sound barriers that may be in contact with a vehicle during a collision reduces the possibility of vehicle snagging.

Sound barrier systems may contain sacrificial components or components that could need repair after vehicular collision. Limiting shattering of sound barriers is particularly important for sound barriers mounted on bridges crossing over other traffic. When reinforced concrete panels are utilized for structure-mounted sound barriers, it is recommended that two mats of reinforcement are used to reduce the possibility of the concrete shattering during vehicular collision. Restraint cables placed in the middle of concrete panels may be used to reduce shattering while avoiding the increased panel thickness required to accommodate two layers of reinforcement.

The bridge overhang or moment slabs need not to be designed for more force effects than the resistance of the base connection of the sound barrier.

The design strategy involving a controlled failure scenario is similar in concept to the use of capacity protected design to resist seismic forces. Some damage to the soundwall, traffic barrier, or connections is often preferable to designing an overhang or moment slab for force effects due to vehicular collision. The bridge overhang or moment slabs need not be designed for more force effects than the resistance of the base connection of the sound barriers.

Some guidance on desirable structural performance of sound barriers can be found in European Standard EN1794-2 (2003).

Very limited information is available on crash-testing of sound barrier systems. The requirements of this Article, including the magnitude of collision forces, are mostly based on engineering judgment and observations made during crash-testing of traffic railings without sound barriers.

In the absence of crash test results for sound barrier systems, sound barriers that have not been crash-tested are often used in conjunction with vehicular railings that have been crash-tested as stand-alone railings, i.e. without sound barriers. The collision forces specified

© 2014 by the American Association of State Highway and Transportation Officials.
All rights reserved. Duplication is a violation of applicable law.

applied. The collision force shall be assumed to act at a point 4.0 ft above the surface of the pavement in front of the traffic railing for Test Levels 3 and lower and 14.0 ft above the surface of the pavement in front of the traffic railing for Test Levels 4 and higher.

Case 3: For sound barriers behind a crashworthy traffic railing with a sound barrier setback between 1.0 ft and 4.0 ft: vehicular collision forces and the point of application of the force shall vary linearly between their values and locations specified in Case 1 and Case 2 above.

Case 4: For sound barriers behind a crashworthy traffic railing with a sound barrier setback more than 4.0 ft: vehicular collision forces need not be considered.

The setback of the sound barrier, S, shall be taken as shown in Figure 15.8.4-1.

herein are meant to be applied to the sound barriers portion of such systems.

Crash Test Levels 3 and lower are performed using small automobiles and pick-up trucks. Crash Test Levels 4 and higher include single unit, tractor trailer trucks, or both. The difference in height of the two groups of vehicles is the reason the location of the collision force is different for the two groups of sound barriers.

For crash Test Levels 3 and lower, the point of application of the collision force on the sound barriers is assumed to be always 4.0 ft above the pavement.

During crash-testing of traffic railings for crash Test Level 4 and higher, trucks tend to tilt above the top of the railing and the top of the truck cargo box may reach approximately 4.0 ft behind the traffic face of the traffic railing. For such systems, the point of application of the collision force is expected to be as high as the height of the cargo box of a truck, assumed to be 14.0 ft above the pavement surface.

For sound barriers mounted on crashworthy traffic barriers or with a small setback assumed to be less than 1.0 ft, the full crash force is expected to act on the sound barrier. The point of application of this force is assumed to be at the level of the cargo bed, taken as 6.0 ft above the surface of the pavement.

For a sound barrier mounted with a setback more than 1.0 ft behind the traffic face of the traffic railing, it is expected that the truck cargo box, not the cargo bed, will impact the sound barrier. It is expected that the top of the cargo box will touch the sound barrier first. Due to the soft construction of cargo boxes, it is assumed that they will be crushed and will soften the collision with the sound barrier. The depth of the crushed area will increase with the increase of the collision force, thus lowering the location of the resultant of the collision force. The magnitude of the collision force and the degree to which the cargo box is crushed are expected to decrease as the setback of the sound barrier increases.

In the absence of test results, it is assumed that a collision force of 4.0 kips will develop at the top of the cargo box when it impacts sound barriers mounted with a setback of 4.0 ft.

The collision force and the point of application are assumed to vary linearly as the sound barrier setback varies between 1.0 ft and 4.0 ft.

© 2014 by the American Association of State Highway and Transportation Officials.
All rights reserved. Duplication is a violation of applicable law.

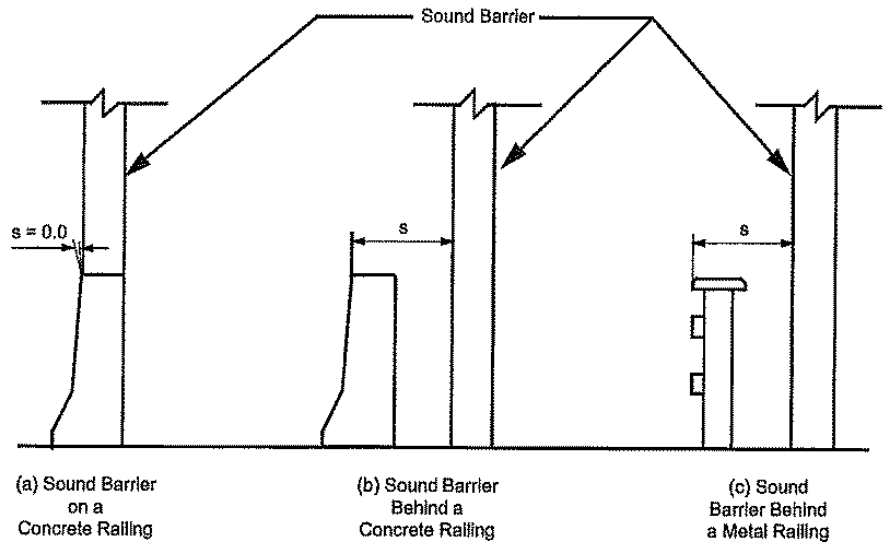

Figure 15.8.4-1—Sound Barrier Setback Distance

Collision forces on sound barriers shall be applied as a line load with a length equal to the longitudinal length of distribution of collision forces, L_n, specified in Appendix A13.

For sound barriers prone to vehicular collision forces, the wall panels and posts and the post connections to the supporting traffic barriers or footings shall be designed to resist the vehicular collision forces at the Extreme Event II limit state.

For post-and-panel construction, the design collision force for the wall panels shall be the full specified collision force placed on one panel between two posts at the location that maximizes the load effect being checked. For posts and post connections to the supporting components, the design collision force shall be the full specified collision force applied at the point of application specified in Cases 1 through 3 above.

In some cases, the wall panel is divided into a series of horizontal elements. In these situations, each horizontal strip should be designed for the full design force.

The vehicular railing part of the sound barrier/railing system does not need to satisfy any additional requirements beyond the requirements specified in Section 13 of the Specifications for the stand-alone railings, including the height and resistance requirements.

Unless otherwise specified by the Owner, vehicular collision forces shall be considered in the design of sound barriers.

Owners may select to ignore vehicular collision forces in the design of sound barriers at locations where the collapse of the sound barrier or portions of thereof has minimal safety consequences.

© 2014 by the American Association of State Highway and Transportation Officials.
All rights reserved. Duplication is a violation of applicable law.

C3.13 Submittals

C3.14 Zone of Intrusion

Figures adapted from AASHTO Roadside Design Guide,4th Edition.

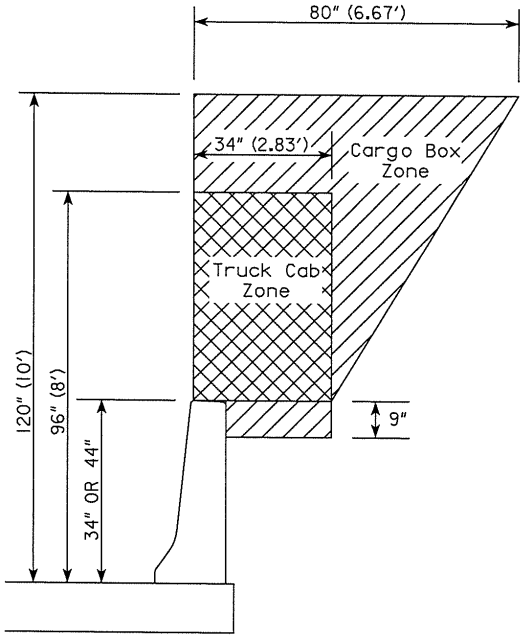

3.14C, FIGURE 1: GUIDELINE FOR DESIRED CLEARANCE
(ADAPTED FROM ZONE OF INTRUSION FOR TL-4 BARRIERS PER
NCHRP REPORT 350, REF. AASHTO RDG FIGURE 5-31)

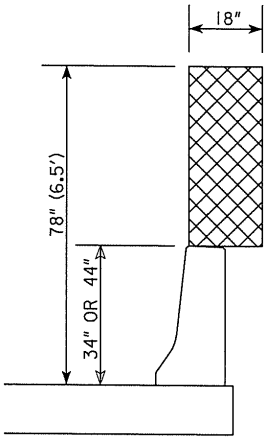

3.14C, FIGURE 2: GUIDELINE FOR MINIMUM CLEARANCE
(ADAPTED FROM ZONE OF INTRUSION GUIDELINES FOR TL-3
CONCRETE BARRIERS REF. AASHTO RDG FIGURE 5-28)

NOTE: THE 34 INCH TALL AND 44 INCH TALL IOWA STANDARD F-SHAPE BARRIER RAILS MEET NATIONAL COORPERATIVE HIGHWAY RESEARCH PROGRAM (NCHRP) REPORT 350 TEST LEVEL 4 (TL-4) AND TEST LEVEL 5 (TL-5) RESPECTIVELY. NOTE THAT THE IOWA STANDARD F-SHAPE BARRIER RAILS ARE 2 INCHES TALLER THAN THE MINIMUM HEIGHTS REQUIRED FOR TL-4 AND TL-5 BARRIER RAILS IN ORDER TO ACCOUNT FOR THE POSSIBILITY OF A 2 INCH THICK FUTURE OVERLAY.

6-2-17

C3.15 Temporary Bridges

Monitoring Plan (a.k.a. Plan of Action or POA) Example

Needs to be finalized following the submittal of the shop drawings for temporary bridge and revetment design. See ??'s below

Bridglet No.: 5934.8B034
County: Lucas
Route: US 34
Stream: Wolf Hollow (Detour)
District: 5 - Chariton Garage
Location: US 034 Over Wolf Hollow (Detour), 2.1 miles E of E Jct US 65
Type: Minimum 40'-0 x 28' Single span. Type TBD - Contractor choice meeting minimum size

Interim Instructions:

Site is Project BRFN-034-6(95)--39-59, US 34 Detour over Wolf Hollow, 2.1 mi E of E Jct US 65. Bridge is a temporary detour bridge and is not in the NBIS.

Excessive scour could occur for floods approaching the incipient overtop discharge, which is approximately a 6-yr. event in the Wolf Hollow basin. The bridge shall be checked for scour for events that meet or exceed the 5-year event. The Bridge Watch rainfall trigger should be set to the 5-yr. rainfall event. Upon alert, the site should be monitored to determine if the monitor water surface has been exceeded. If the monitor water surface elevation of 872.6 measured directly downstream (north) of the bridge is exceeded, a scour inspection shall be performed.

The bridge is classified as Critical. The bridge shall be inspected for integrity at the abutments once the critical water surface has been reached. The critical water surface elevation is El. 872.6 measured directly downstream (north) of the bridge. This elevation corresponds to the incipient overtop discharge of 2200 cfs. This elevation is ?? ft. below the minimum low beam. Reference Elevation - C.L. Detour Roadway C.L. W. Abutment, El. 879.88.

The abutment type is of the contractor's choosing and design. The primary scour concern at this bridge is the scour depth at the face of abutments. Undermining of the abutments could result in loss of road approach material. The bridge shall be closed to traffic if the ground surface in front of the abutments becomes lower than elevation ?? (??' below low beam). The bridge should remain closed until the integrity of the abutments can be evaluated for safety or the channel erosion is repaired.

Attachments:
A Bridge Design Sht. 1, Design No. 222
B Detour Roadway Plan Sht. F1

LATITUDE 41.031744 N
LONGITUDE 93.422639 W

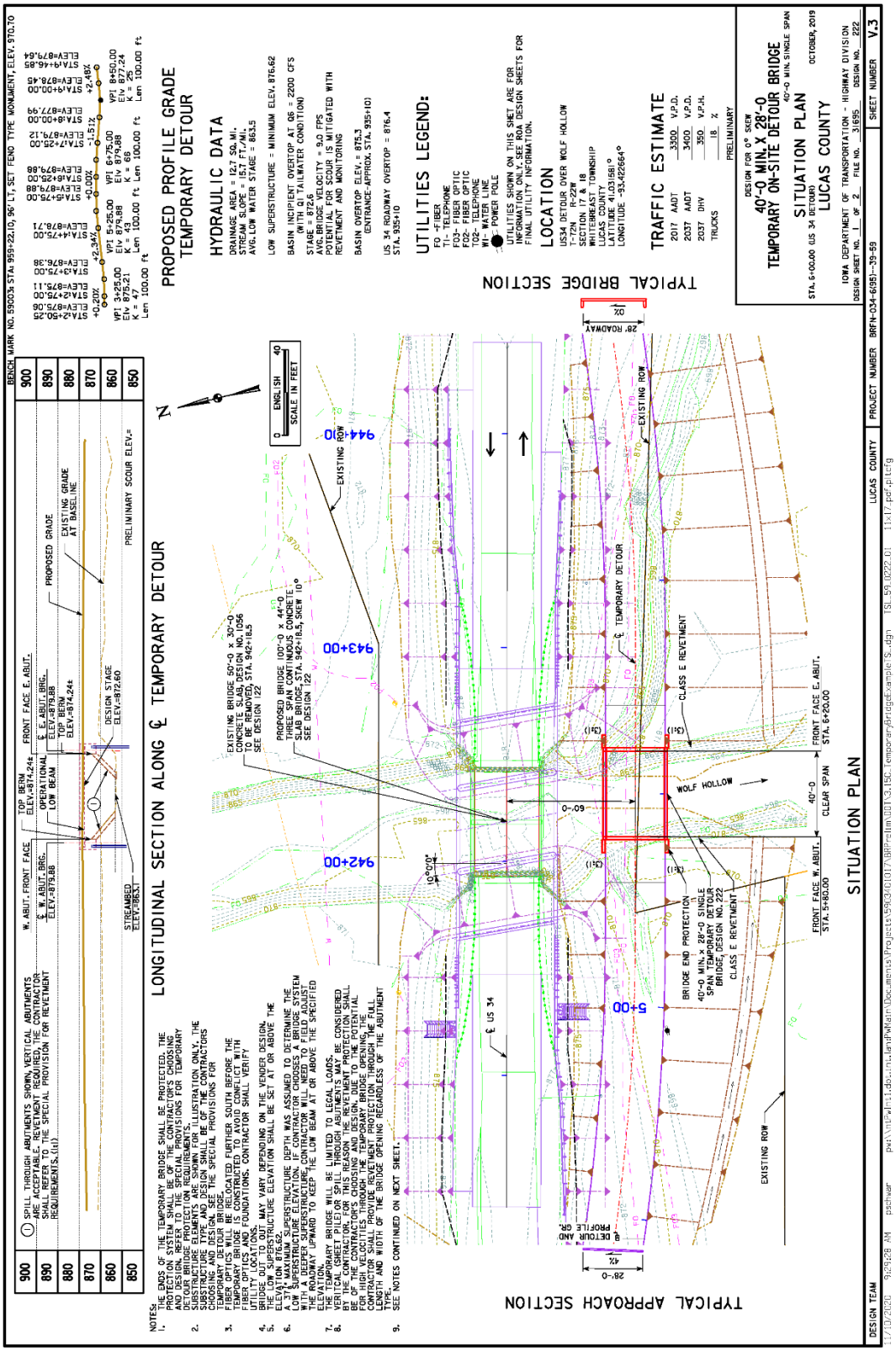
LONGITUDINAL SECTION ALONG ℄ TEMPORARY DETOUR
PROPOSED PROFILE GRADE
TEMPORARY DETOUR
HYDRAULIC DATA
DRAINAGE AREA = 12.7 SQ. MI.
STREAM SLOPE = 15.7 FT./MI.
AVG. LOW WATER STAGE = 863.5
LOW SUPERSTRUCTURE = MINIMUM ELEV. 876.62
BASIN INCIPIENT OVERTOP AT Q6 = 2200 CFS
(WITH Q1 TAILWATER CONDITION)
STAGE = 872.6
AVG. BRIDGE VELOCITY = 9.0 FPS
POTENTIAL FOR SCOUR IS MITIGATED WITH
REVETMENT AND MONITORING
BASIN OVERTOP ELEV. = 875.3
(ENTRANCE-APPROX. STA. 935+10)
US 34 ROADWAY OVERTOP = 876.4
STA. 935+10
UTILITIES LEGEND:
FO -FIBER
T1 -TELEPHONE
FO3- FIBER OPTIC
FO2- FIBER OPTIC
T02- TELEPHONE
W1- WATER LINE
POWER POLE
UTILITIES SHOWN ON THIS SHEET ARE FOR
INFORMATION ONLY. SEE ROA DESIGN SHEETS FOR
FINAL UTILITY INFORMATION.
LOCATION
US34 DETOUR OVER WOLF HOLLOW
T-72N, R-22W
SECTION 17 & 18
WHITEBREAST TOWNSHIP
LUCAS COUNTY
LATITUDE -41.0581°
LONGITUDE -93.422664°
TRAFFIC ESTIMATE
2017 AADT 3300 V.P.D.
2037 AADT 3400 V.P.D.
2037 DHV 350 V.P.H.
TRUCKS 18 %
PRELIMINARY
DESIGN FOR 0° SKEW
40'-0 MIN. X 28'-0
TEMPORARY ON-SITE DETOUR BRIDGE
40'-0 MIN. SINGLE SPAN
SITUATION PLAN
STA. 6+00.00 US 34 DETOUR
OCTOBER, 2019
LUCAS COUNTY
IOWA DEPARTMENT OF TRANSPORTATION - HIGHWAY DIVISION
DESIGN SHEET NO. 1 OF 2 FILE NO. 31695 DESIGN NO. 222
PROJECT NUMBER BRFN-034-6(95)--39-59
SHEET NUMBER V.3
TYPICAL BRIDGE SECTION
TYPICAL APPROACH SECTION
SITUATION PLAN
EXISTING ROW
CLASS E REVETMENT
WOLF HOLLOW
℄ TEMPORARY DETOUR
℄ US 34
BRIDGE END PROTECTION
40'-0 MIN. x 28'-0 SINGLE SPAN TEMPORARY DETOUR BRIDGE, DESIGN NO. 222
FRONT FACE W. ABUT. STA. 5+80.00
FRONT FACE E. ABUT. STA. 6+20.00
40'-0 CLEAR SPAN
60'-0
28'-0
28' ROADWAY
944+00
943+00
942+00
5+00
NOTES:
1. THE ENDS OF THE TEMPORARY BRIDGE SHALL BE PROTECTED. THE PROTECTION SYSTEM SHALL BE OF THE CONTRACTOR'S CHOOSING AND DESIGN. REFER TO THE SPECIAL PROVISIONS FOR TEMPORARY DETOUR BRIDGE PROTECTION REQUIREMENTS.
2. SUBSTRUCTURE ELEMENTS ARE SHOWN FOR ILLUSTRATION ONLY. THE SUBSTRUCTURE TYPE AND DESIGN SHALL BE OF THE CONTRACTORS CHOOSING AND ZONING SHALL BE IN ACCORDANCE WITH THE SPECIAL PROVISIONS FOR TEMPORARY DETOUR BRIDGE.
3. FIBER OPTICS WILL BE RELOCATED FURTHER SOUTH BEFORE THE TEMPORARY BRIDGE IS CONSTRUCTED TO AVOID CONFLICT WITH THE PROPOSED BRIDGE FOUNDATIONS. CONTRACTOR SHALL VERIFY UTILITY LOCATIONS.
4. BRIDGE OUT TO OUT MAY VARY DEPENDING ON THE VENDER DESIGN.
5. THE LOW SUPERSTRUCTURE ELEVATION SHALL BE SET AT OR ABOVE THE ELEVATION 876.62.
6. A 3½" MAXIMUM SUPERSTRUCTURE DEPTH WAS ASSUMED TO DETERMINE THE LOW SUPERSTRUCTURE ELEVATION. IF CONTRACTOR CHOOSES A BRIDGE SYSTEM WITH A LARGER SUPERSTRUCTURE DEPTH, THE ROADWAY MUST BE RAISED TO THE ROADWAY UPWARD TO KEEP THE LOW BEAM AT OR ABOVE THE SPECIFIED ELEVATION.
7. THE TEMPORARY BRIDGE WILL BE LIMITED TO LEGAL LOADS.
8. VERTICAL (SHEET PILE) OR SPILL THROUGH ABUTMENTS MAY BE CONSIDERED BY THE CONTRACTOR. FOR THIS REASON THE REVETMENT PROTECTION SHALL BE OF THE CONTRACTORS CHOOSING AND DESIGN DUE TO THE POTENTIAL FOR THE ABUTMENTS TO BE SET BACK FURTHER THAN THE EXISTING SLOPE. THE CONTRACTOR SHALL PROVIDE REVETMENT PROTECTION THROUGH THE FULL LENGTH AND WIDTH OF THE BRIDGE OPENING REGARDLESS OF THE ABUTMENT TYPE.
9. SEE NOTES CONTINUED ON NEXT SHEET.
DESIGN TEAM
LUCAS COUNTY
11/10/2020 9:29:28 AM pschwar pw:\\nlfwfhsfs1.dot.iowa.lan\fwMain\Documents\Projects\59\34\6\017\BRPrelim\DD\3.15C.Temporary\BridgeExample\S..dgn TSL_59.0222.01 11x17.pdf.pltcfg

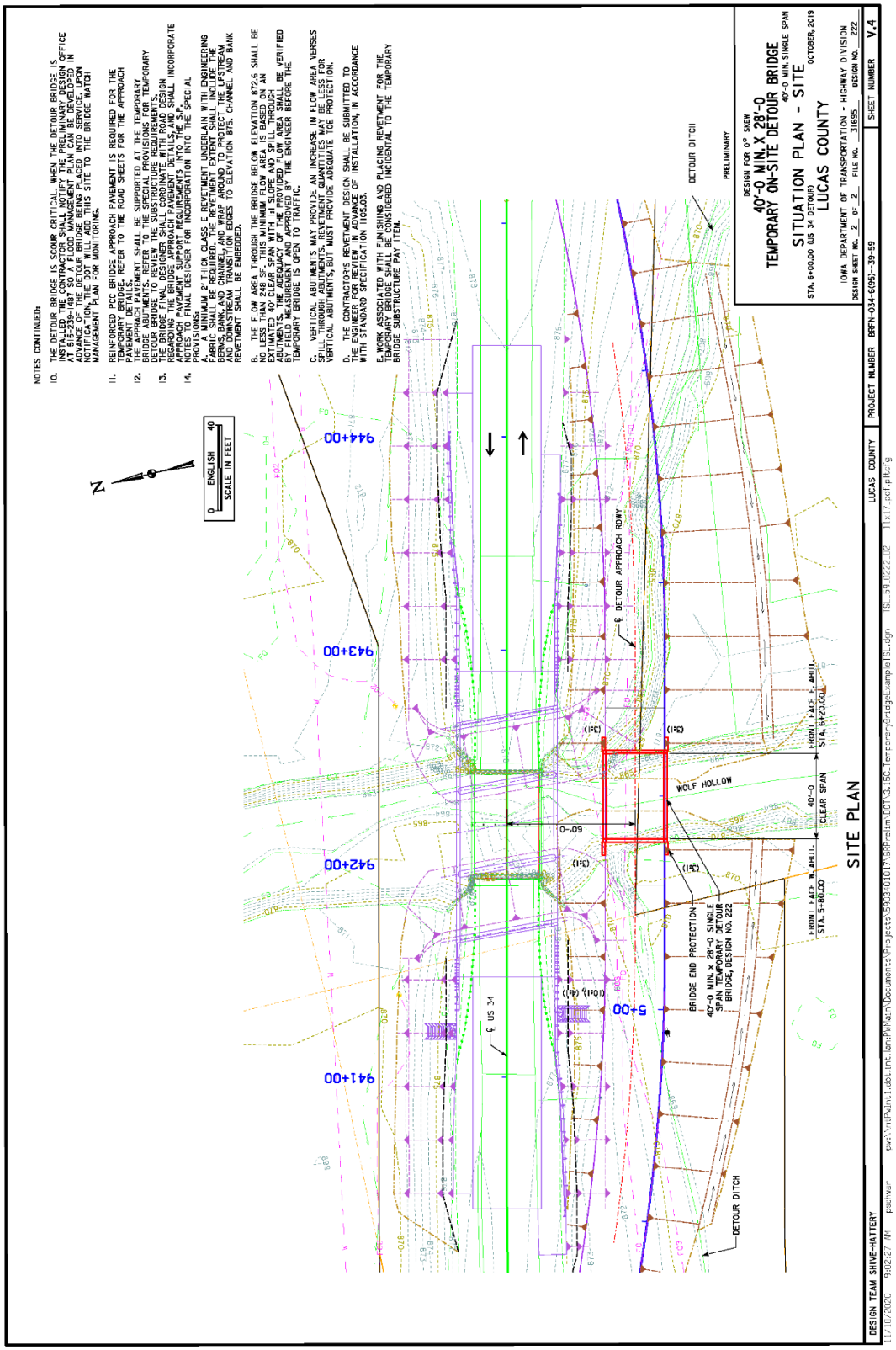
NOTES CONTINUED:
10. THE DETOUR BRIDGE IS SCOUR CRITICAL. WHEN THE DETOUR BRIDGE IS INSTALLED THE CONTRACTOR SHALL NOTIFY THE PRELIMINARY DESIGN OFFICE AT 515-239-1447 AT LEAST TWO WEEKS IN ADVANCE SO THE DOT CAN BE ADVISED IN ADVANCE OF THE DETOUR BRIDGE BEING PLACED INTO SERVICE. UPON NOTIFICATION, THE DOT WILL ADD THIS SITE TO THE BRIDGE WATCH MANAGEMENT PLAN FOR MONITORING.
11. REINFORCED PCC BRIDGE APPROACH PAVEMENT IS REQUIRED FOR THE TEMPORARY BRIDGE. REFER TO THE ROAD SHEETS FOR THE APPROACH PAVEMENT DETAILS.
12. THE APPROACH PAVEMENT SHALL BE SUPPORTED AT THE TEMPORARY BRIDGE ABUTMENTS. REFER TO THE SPECIAL PROVISIONS FOR TEMPORARY DETOUR BRIDGE TO REVIEW THE SUBSTRUCTURE REQUIREMENTS.
13. THE BRIDGE FINAL DESIGNER SHALL COORDINATE WITH ROAD DESIGN REGARDING THE BRIDGE APPROACH PAVEMENT DETAILS, AND SHALL INCORPORATE APPROACH PAVEMENT SUPPORT REQUIREMENTS INTO THE S.P.
14. NOTES TO FINAL DESIGNER FOR INCORPORATION INTO THE SPECIAL PROVISIONS:
A. A MINIMUM 2" THICK CLASS E REVETMENT UNDERLAIN WITH ENGINEERING FABRIC SHALL BE REQUIRED. THE REVETMENT EXTENT SHALL INCLUDE THE BRIDGE SLOPE, ABUTMENT SLOPE, AND AREA AROUND TO PROTECT THE UPSTREAM AND DOWNSTREAM TRANSITION EDGES TO ELEVATION 875. CHANNEL AND BANK REVETMENT SHALL BE EMBEDDED.
B. THE FLOW AREA THROUGH THE BRIDGE BELOW ELEVATION 872.6 SHALL BE NO LESS THAN 248 SF. THIS MINIMUM FLOW AREA IS BASED ON AN EQUIVALENT 40' CLEAR SPAN WITH A PROPOSED FLOWLINE ELEVATION OF 867. THE FLOW AREA SHALL BE VERIFIED BY FIELD MEASUREMENT AND APPROVED BY THE ENGINEER BEFORE THE TEMPORARY BRIDGE IS OPEN TO TRAFFIC.
C. VERTICAL ABUTMENTS MAY PROVIDE AN INCREASE IN FLOW AREA VERSES SPILL THROUGH ABUTMENTS. REVETMENT QUANTITIES MAY BE LESS FOR VERTICAL ABUTMENTS, BUT MUST PROVIDE ADEQUATE TOE PROTECTION.
D. THE CONTRACTOR'S REVETMENT DESIGN SHALL BE SUBMITTED TO THE ENGINEER FOR REVIEW IN ADVANCE OF INSTALLATION, IN ACCORDANCE WITH STANDARD SPECIFICATION 1105.03.
E. WORK ASSOCIATED WITH FURNISHING AND PLACING REVETMENT FOR THE TEMPORARY DETOUR BRIDGE SHALL BE CONSIDERED INCIDENTAL TO THE TEMPORARY BRIDGE SUBSTRUCTURE PAY ITEM.
N
0 ENGLISH 40
SCALE IN FEET
944+00
943+00
942+00
941+00
5+00
℄ US 34
60'-0
(3H:1)
(1H:1)
(1H:1)
(1H:1)
(1H:1)
(1H:1)
(1H:1)
℄ DETOUR APPROACH ROWY
WOLF HOLLOW
BRIDGE END PROTECTION
40'-0 MIN. x 28'-0 SINGLE SPAN TEMPORARY DETOUR BRIDGE, DESIGN NO. 222
FRONT FACE W. ABUT. STA. 5+80.00
40'-0 CLEAR SPAN
FRONT FACE E. ABUT. STA. 6+20.00
DETOUR DITCH
DETOUR DITCH
PRELIMINARY
DESIGN FOR 0° SKEW
40'-0 MIN. X 28'-0
TEMPORARY ON-SITE DETOUR BRIDGE
40'-0 MIN. SINGLE SPAN
SITUATION PLAN - SITE
OCTOBER, 2019
LUCAS COUNTY
STA. 6+00.00 (US 34 DETOUR)
IOWA DEPARTMENT OF TRANSPORTATION - HIGHWAY DIVISION
DESIGN SHEET NO. 2 OF 2 FILE NO. 31695 DESIGN NO. 222
SHEET NUMBER V.4
SITE PLAN
DESIGN TEAM SHIVE-HATTERY
LUCAS COUNTY
PROJECT NUMBER BRFN-034-6(95)--39-59
11/10/2020 9:02:27 AM psctwar
11x17_pdf.pltcfg

C3.16 Resiliency/Climate Change

TABLE OF CONTENTS ~ PRELIMINARY DESIGN OF CULVERTS

4 Preliminary Design of Culverts
- 4.1 General
  - 4.1.1 Policy overview
  - 4.1.2 Design information
    - 4.1.2.1 Identification numbers
  - 4.1.3 Definitions
  - 4.1.4 Abbreviations and notation
  - 4.1.5 References
    - 4.1.5.1 Direct
    - 4.1.5.2 Indirect
- 4.2 General Culvert Design
  - 4.2.1 Hydrology
  - 4.2.2 Hydraulics
    - 4.2.2.1 Riverine Infrastructure Database
  - 4.2.3 Culverts in Series
  - 4.2.4 Bedding and Backfill
  - 4.2.5 Settlement and Camber
  - 4.2.6 Minimum Allowable Cover
  - 4.2.7 High Fill Pipes
  - 4.2.8 DB Standard Road Plans and Road Design Details
  - 4.2.9 Stream Stability
- 4.3 Culvert Plan Preparation
  - 4.3.1 Culvert Database (old Pink Sheets)
  - 4.3.2 Pipe Sizes
  - 4.3.3 Culvert Type
  - 4.3.4 Horizontal Alignment
  - 4.3.5 Vertical Alignment
  - 4.3.6 Length Determination
  - 4.3.7 Culvert Tabulation Sheets
- 4.4 Pipe Culverts
  - 4.4.1 Extensions
  - 4.4.2 Median Pipes
  - 4.4.3 Cross Road Culvert Letdowns
  - 4.4.4 Ditch Letdowns
  - 4.4.5 Culvert Liners
  - 4.4.6 Culvert Maintenance
  - 4.4.7 Uplift of Culvert Inlets
  - 4.4.8 Trenchless Construction
  - 4.4.9 Slope Tapered Inlets for Pipes
  - 4.4.10 Revetment for Pipes
  - 4.4.11 Fish Passable Pipe Culverts for Regulatory Compliance
  - 4.4.12 Temporary Run Around (on-site detour)
  - 4.4.13 Flap Gates for Pipes
- 4.5 Reinforced Concrete Boxes (RCBs) and Designs
  - 4.5.1 Cast in Place RCBs
    - 4.5.1.1 Cast-in-Place RCB Headwalls
  - 4.5.2 Precast RCBs
  - 4.5.3 RCB Extensions
  - 4.5.4 Flumes and Scour Floors
  - 4.5.5 Drop Inlets
  - 4.5.6 Slope Tapered Inlets for RCBs
  - 4.5.7 Bridge Replacements with RCBs Using Flowable Mortar
  - 4.5.8 Revetment for RCBs
  - 4.5.9 Grading control points

4.5.10 Stock Passes
4.5.11 Costs
4.5.12 Alternative Structure Type
4.5.13 Staging
4.5.14 Multi-Barrel RCB Culvert Sedimentation Mitigation
4.5.15 Fish Passable Box Culverts for Regulatory Compliance
4.5.16 Pedestrian or Shared Use Path RCB
4.6 Permits and Approvals
4.7 Submittals

4 Preliminary Design of Culverts

4.1 General

The following series of articles provides a set of guidelines for development of pipes, and type, size, and location (TS&L) plans for box culverts/structural designs. Within these guidelines sound engineering judgment, including technical and economic analysis, must be applied in all situations.

Additional information regarding preliminary design is also contained within BDM Sections 1 and 7.

4.1.1 Policy overview

Within the Bridges and Structures Bureau, the preliminary bridge design unit develops the concepts and the preliminary layouts for highway culverts and associated structures. For culverts/structures that require final design, the unit assembles information and develops a preliminary situation plan sheet so that a designer in one of the final design units can perform the structural design and develop final plans for a contract letting. For pipe culverts the unit develops the layout in sufficient detail that the Design Bureau can reference the information on their final road plans for a contract letting.

The preliminary design process for new and replacement structures begins with a concept statement developed by the Preliminary Road Design Unit within the Design Bureau. When a culvert is an option for replacement, the Preliminary Bridge Design Unit contributes to the concept statement by providing the type and size of the proposed culvert along with its estimated construction cost and the Bridge Bureau attachment which summarizes critical considerations.

The development of all preliminary culvert plans includes a number of tasks such as:

- Analyzing hydrology and hydraulics;
- Analyzing road geometrics;
- Determining the type, size, and location of structures;
- Developing a layout in the CADD system;
- Attending field reviews;
- Coordinating with other Iowa DOT bureaus

4.1.2 Design information

The designer will need to access information from several sources to perform preliminary design, including, but not limited to, the following:

- Plans for existing structures, including as-built plans, from Electronic Records Management System (ERMS);
- A new site survey from the Design Bureau;
- Aerial photographs from the Design Bureau and/or web sites;

- Aerial agricultural photographs (drainage maps) from the Photogrammetry/Preliminary Survey Unit in the Design Bureau;
- Topographic maps from the Bridges and Structures Bureau, the Design Bureau and/or web sites;
- LiDAR data and
- Field exams.

Plans for existing structures will give a good indication of the site when an existing structure was built, widened, and/or extended, and comparison with a new survey will indicate any site changes that have occurred since previous construction.

The designer should make appropriate use of CADD to integrate support programs such as Open Road Designer when developing type, size, and location (TS&L) plans. For more information on CONNECT applications, refer to our web site under Automation Tools.

Guidance for concept development can be found on the Iowa DOT website.
Concept Development

4.1.2.1 Identification numbers

Refer to BDM 3.2.1 and 1.11.4 for guidance on assigning identification numbers for new and replacement RCB culverts, and other structures requiring final structural design.

4.1.3 Definitions

Annual Exceedance Probability Discharge (AEPD) is an estimate of the flood discharge for the annual flood frequency recurrence intervals as determined by a regional regression analysis method described in USGS SIR 2013-5086.

Base Flood is the flood having a one percent chance of being equaled or exceeded in any given year. This is the regulatory standard also referred to as the “100-year flood.” The base flood is the national standard used by the National Flood Insurance Program (NFIP) and all Federal agencies for the purposes of requiring the purchase of flood insurance and regulating new development.

Base Flood Elevation (BFE) is the computed elevation to which floodwater is anticipated to rise during the base flood. BFEs are shown on Flood Insurance Rate Maps (FIRMS) and on the flood profiles. The BFE is the regulatory requirement for the elevation or floodproofing of structures. The relationship between the BFE and a structure’s elevation determines the flood insurance premium.

Censored gage record includes discharges (low and high outliers) and historical flood discharges that the USGS may adjust or integrate for use in peak flow analysis. There are two types of censored data (1) annual peak discharges collected at gage sites for which the discharge is only known to be less than the minimum recordable discharge threshold, or (2) in the case of historical periods, annual peak discharges that are only known not to have exceeded a recorded historical flood discharge.

Detailed Flood Insurance Study (FIS) analysis of a community’s flood prone areas which determines the 100-year flood elevation and floodway for certain streams.

Drainage Districts in Iowa provide a legally organized means to construct and maintain adequate drainage outlets and levees. In most cases, the Board of Supervisors in the county in which the district is located becomes the board of trustees (managing board) for that district. When designing a replacement drainage structure that crosses a Drainage District, coordination is required. Design features such as flowline, channel slope, and cross section may be dictated by the Drainage District requirements.

Electronic Reference Library (ERL) contains plans, specifications, and manuals and is available on the Iowa Department of Transportation web site.

Electronic Records Management System (ERMS) has been developed to enable electronic use and management of documents within the Iowa Department of Transportation. ERMS includes aerial photographs, existing bridge plans, bridge inspection records, and other documents useful for preliminary bridge design.

EMA/MGB is the method used in Scientific Investigations Report 2013-5086 to compute log-Pearson Type III exceedance probability analysis for streamgages evaluated for use in the development of the Iowa regional regression equations. The method allows for the integration of censored (low and high outliers) and historical peak-discharge data in the analysis. This is the method used in Bulletin 17C "Guidelines for Determining Flood Flow Frequency."

Expected moments algorithm (EMA) is an annual exceedance-probability analysis method used for continuous-record streamgages. EMA analysis method needs a consistent statistical test (MGB) to identify potentially influential low flows in an annual peak-discharge series to properly reduce the effect of low outliers.

Floodway is the portion of the floodplain that must be left unobstructed for the conveyance of the 100-year flood.

Flood Risk Reduction Project (FRRP) is typically defined as a Corps of Engineers designed flood protection levee system.

Grading surface is the finished earthwork surface within the limits of project grading and the existing ground surface outside the limits of project grading. At locations where the finished earthwork surface represents non-earthen materials (rock revetment, concrete block mats, pavement etc.) plan details will define the grading surface relative to these materials. Earthwork quantities are calculated relative to the grading surface.

Multiple Grubbs-Beck (MGB) test is a statistical method to identify low gage data outliers that depart substantially from the trend of the rest of the annual peak discharge data. Annual peak discharges identified as low outliers by the method are excluded from the dataset. EMA/MGB exceedance-probability analysis computed for the Scientific Investigations Report 2013-5086 used the MGB test for the development of the skew analysis and the Iowa regional regression equations.

Multi-region basin is a site drainage area that drains more than one hydrologic region (crosses a hydrologic region boundary) as defined by a given USGS methodology for calculating annual exceedance probability discharges.

Q50 is a flood that has a 2% statistical probability (chance) of being equaled or exceeded in any year.

Q100 is a flood that has a 1% statistical probability (chance) of being equaled or exceeded in any year.

Revetment is a relatively general term for a facing that supports an embankment. **Riprap** is a more specific term for the layer of various sized rocks or broken concrete used to protect a streambank from erosion. With respect to streambank protection the terms **revetment** and **riprap** usually are interchangeable. **Revetment Stone** is the quarry industry's product that may be used for streambank erosion protection.

Unit Leader is the supervisor of the Bridges and Structures Bureau preliminary bridge unit, final design unit, or consultant coordination unit.

Shared use path is a bikeway physically separated from motorized vehicular traffic by an open space or a barrier and either within the highway right-of-way or within an independent right-of-way. Shared use

paths may also be used by pedestrians, skaters, wheelchair users, joggers, and other non-motorized users. See AASHTO's 2012 *Guide for the Development of Bicycle Facilities* [BDM 4.1.5.2].

Uncensored gage record includes peak discharge data at given gage site, exclusive of censored record. Uncensored data represents actual observed values, whereas censored data reflects historical or otherwise estimated data values. Statistics developed using only uncensored data will generally be presented as 'period-of-record' whereas statistics that include censored data generally be presented as 'historical period'.

Weighted Independent Estimate (WIE) is a method for weighting two independent estimates inversely proportional to their associated variances. Annual exceedance-probability discharges (AEPD) by the log-Pearson Type III estimate (EMA/MGB) and the regional regression equations are assumed to be independent and can be weighted by this method and the variance of the weighted estimate will be less than the variance of either of the independent estimates.

4.1.4 Abbreviations and notation

3R, Resurfacing, Restoration, Rehabilitation; a series of terms that refers to a Federal Highway Administration highway project funding program
ADT, average daily traffic
AEPD, annual exceedance-probability discharge
B0, event code for Bridges and Structures Bureau concept
B1, event code for Bridges and Structures Bureau layout
B2, event code for structural/hydraulic design plans to Design Bureau
BNSF, Burlington Northern Santa-Fe Railway
CFR, Code of Federal Regulations
CIP, Cast in place
CLOMR, Conditional Letter of Map Revision issued by FEMA
CMP, corrugated metal pipe
D_{50}, median revetment stone diameter
D0, event code for predesign concept
D2, event code for design field exam
DA, drainage area
DOCT, design outlet channel thalweg
EMA, expected moments algorithm annual exceedance-probability analysis
ERL, Electronic Reference Library
ERMS, Electronic Records Management System
FEMA, Federal Emergency Management Agency
FHWA, Federal Highway Administration
FIS, Flood Insurance Study
HDPE, high density polyethylene
HEC-2, U.S. Army Corps of Engineers **H**ydrologic **E**ngineering **C**enter hydraulic analysis software
HEC-RAS, U.S. Army Corps of Engineers **H**ydrologic **E**ngineering **C**enter – **R**iver **A**nalysis **S**ystem hydraulic analysis software
IAC, Iowa Administrative Code
IFI, intermediate foundation improvement
IHRB, Iowa Highway Research Board
Iowa DNR, Iowa Department of Natural Resources
Iowa DOT, Iowa Department of Transportation
LOMR, Letter of Map Revision issued by FEMA
LP3, log-Pearson Type III
LT, left
MCS, main-channel slope, a variable in USGS WRIR 03-4120
MGB, Multiple Grubbs-Beck low-outlier test
n-coefficient, Manning's Coefficient [BDM 3.2.2.3]

NFIP, National Flood Insurance Program
NHS, National Highway System
NOAA, National Oceanic and Atmospheric Administration
NRCS, Natural Resources Conservation Service
PE, preliminary engineering
PEP, polyethylene pipe
POT, point on tangent
Q_2, Q_{50}, Q_{100}, Q_{200}, Q_{500}, estimated channel discharge at 2-, 50-, 100-, 200- or 500-year design flood frequency
RCB, reinforced concrete box, a type of culvert
RCP, reinforced concrete pipe
RDD, Road Design Details
ROW, right of way
RRE, regional regression equation
RT, right
SI&A, Structure Inventory and Appraisal
SIIMS, Structure Inventory and Inspection Management System
SIR, scientific investigation report
SRP, Standard Road Plans
SUDAS, (Iowa) Statewide Urban Design and Specifications
TS&L, type, size, and location
UP or **UPRR,** Union Pacific Railroad
USGS, United States Geological Survey
WIE, weighted independent estimates
WRIR, water-resources investigation report
WSPRO, water surface profile software developed by the U.S. Geological Survey

4.1.5 References

4.1.5.1 Direct

[IDOT PPM policy number] refers to a policy in the Iowa Department of Transportation *Policies and Procedures Manual.*

[IDOT SS article] refers to Iowa Department of Transportation *Standard Specifications for Highway and Bridge Construction, Series 2023* with article number. (Available on the Internet at: https://www.iowadot.gov/erl/index.html)

[DB DM article, table, or figure] refers to the Design Bureau, Highway Division *Design Manual* with article, table, or figure number. (Available on the Internet at: https://iowadot.gov/design/Design-manual)

[DB RDD sheet number] refers to the Design Bureau, Highway Division "Road Design Details" with sheet number. Formerly the detail manual was referred to as the "green book." (Available on the Internet at: https://iowadot.gov/design/Road-design-details)

[DB SRP sheet number] refers to an Design Bureau, Highway Division "Standard Road Plan" with sheet number. Formerly the plan manual was referred to as the "red book." (Available on the Internet at: https://iowadot.gov/design/Standard-road-plans)

4.1.5.2 Indirect

American Association for State Highway and Transportation Officials (AASHTO). *A Policy on Design Standards—Interstate System, 5th Edition*. Washington: AASHTO, 2005.

American Association for State Highway and Transportation Officials (AASHTO). *Guide for the Development of Bicycle Facilities, 3rd Edition*. Washington: AASHTO, 1999.

American Association for State Highway and Transportation Officials (AASHTO). *Roadside Design Guide, 3rd Edition*. Washington: AASHTO, 2002.

BNSF Railway – Union Pacific Railroad. *Guidelines for Railroad Grade Separation Projects.* Union Pacific Railroad, Omaha, NE, 2016. (Available on the Union Pacific web site at: https://www.up.com/cs/groups/public/documents/up_pdf_nativedocs/pdf_rr_grade_sep_projects.pdf)

Cronshey, R., R.H. McCuen, N. Miller, W. Rawls, S. Robbins, and D. Woodward. *Urban Hydrology for Small Watersheds, 2nd Edition, 210-VI-TR-55.* Washington: Natural Resources Conservation Service (NRCS), 1986. (Current edition of Technical Release 55 (TR-55); available on the U.S. Department of Agriculture web site at: https://data.nal.usda.gov/dataset/small-watershed-hydrology-wintr-55)

Eash, D.A., Barnes, K.K., and Veilleux, A.G., 2013, *Methods for Estimating Annual Exceedance-Probability Discharges for Streams in Iowa Based on Data through Water Year 2010: U.S. Geological Survey Scientific Investigation Report 2013-5086 (*Available on the U.S.G.S. website at http://pubs.usgs.gov/sir/2013/5086).

Eash, David A. *Techniques for Estimating Flood-Frequency Discharges for Streams in Iowa, WRIR 00-4233.* Iowa City: U.S. Geological Survey (USGS), 2001.

Eash, David A. *Main-Channel Slopes of Selected Streams in Iowa for Estimation of Flood-Frequency Discharges, WRIR 03-4120.* Iowa City: U.S. Geological Survey (USGS), 2003

Eash, David A. *Comparisons of Estimates of Annual Exceedance-Probability Discharges for Small Drainage Basins in Iowa, Based on Data through Water Year 2013, SIR 2015-5055.* U.S. Geological Survey (USGS), 2015. (Available on the USGS website at https://pubs.usgs.gov/sir/2015/5055/pdf/sir2015-5055.pdf)

Federal Highway Administration. “Hydraulic Engineering” web page with links to publications and software. http://www.fhwa.dot.gov/engineering/hydraulics/index.cfm

Golden Hills Resource Conservation and Development, Inc. *Stream Stabilization in Western Iowa: Structure Elevation and Design Manual, Iowa DOT HR-385.* 1998. (Available on the State Library of Iowa web site at: https://publications.iowa.gov/16075/)

Hadish, G.A., M. Braster, R.A. Lohnes, and C.P. Baumel. *Stream Stabilization in Western Iowa, Iowa DOT HR-352.* 1994. (Available on the Iowa DOT web site at: https://iowadot.gov/research/reports/Year/2003andolder/fullreports/hr352.pdf)

Iowa Administrative Code. Des Moines: Legislative Services Agency, 2004. (Available on the Internet at https://www.legis.iowa.gov/agencies/nonpartisan/lsa)

Iowa State University. *SUDAS Standard Specifications*. Iowa State University, Ames, IA, 2011. (Available on the SUDAS web site at: https://iowasudas.org/manuals/design-manual/)

Lagasse, P.F., J.D. Schall, and E.V. Richardson. *Stream Stability at Highway Structures, Third Edition; Hydraulic Engineering Circular No. 20 (HEC-20)*. Washington: Federal Highway Administration (FHWA), 2001. (Available on the FHWA web site at: https://www.fhwa.dot.gov/engineering/hydraulics/pubs/hec/hec20ed3.pdf)

Lagasse, P.F., P.E. Clopper, J.E. Pagan-Ortiz, L.W. Zevenbergen, L.A. Arneson, J.D. Schall, and L.G. Girard. *Bridge Scour and Stream Instability Countermeasures: Experience, Selection and Design Guidance, Volumes 1 and 2, Third Edition; Hydraulic Engineering Circular No. 23 (HEC-23).* Washington:

Federal Highway Administration (FHWA), 2009. (Available on the FHWA web site at: https://www.fhwa.dot.gov/engineering/hydraulics/pubs/hec/hec23ed2.pdf)

Lara, Oscar G. *Method for Estimating the Magnitude and Frequency of floods at Ungaged Sites on Unregulated Rural Streams in Iowa, WRIR 87-4132.* Iowa City: U.S. Geological Survey (USGS), 1987.

Larimer, O.J. *Drainage Areas of Iowa Streams.* U.S. Geological Survey (USGS), Iowa Highway Research Board Bulletin No. 7 (Red Book). (Available on the Iowa DOT web site at: https://www.iowadot.gov/research/reports/Year/2003andolder/fullreports/HR-29%20FINAL%20Drainage%20Areas%20of%20Iowa%20Streams.pdf)

Norman, J.M., R.J. Houghtalen, and W.J. Johnston. *Hydraulic Design of Highway Culverts, Second Edition; HDS No. 5.* Washington: Federal Highway Administration (FHWA), 2001.

U.S. Department of Transportation, April 2012, Hydraulic Design Series Number 5, *Hydraulic Design of Highway Culverts, Third Edition,* FHWA Publication No. FHWA-HIF-12-026. (Available on the FHWA web site at: http://www.fhwa.dot.gov/engineering/hydraulics/library_arc.cfm?pub_number=7&id=13

4.2 General Culvert Design

In the construction of rural highways in Iowa it is of primary importance that there be minimal diversion of surface water. Water entering the highway right of way in a draw (swale or ditch) should generally be carried through the highway embankment and discharged into the same draw. Although it is not possible to leave unchanged every square foot of watershed, this policy of “minimal diversion” shall be adhered to as closely as practical.

The term “minimal” is difficult to quantify but may be viewed in terms of percentage change and of potential impacts to affected properties. For example, altering a 150-acre watershed to 152 acres may have minor effects on peak flow, but altering a 5-acre watershed to 10 acres may adversely affect farming practices on a given property. Basically, a 10% increase in watershed area due to diversion is usually acceptable. In much rarer instances, decreasing drainage area may also have an adverse impact. One actual example is a 7-acre watershed that was diverted to a much larger basin. During construction, the landowner made IDOT aware that the 7-acre watershed was a significant water supply source to a pond used for watering livestock.

On highway relocations, be aware that field fences may have enough soil built up to create a “ridge” where water does not cross. In effect, these fences may create distinct watershed boundaries and become as important as any “natural” watershed boundary. Avoiding diversion in these instances must be considered when the highway relocation cuts through these fence “ridges”.

Existing tile lines should also be considered in design. For example, if a tile line outlets into or near an existing culvert inlet, care should be taken to keep the same tile flowline elevation.

4.2.1 Hydrology

Reliable estimates of flood-frequency discharges are essential for the economical and proper design of culverts located over streams.

For the design of culverts within a detailed FIS or with the potential for impacting insurable structures, use the 100-year discharge. For the design of crossroad (mainline) culverts and for most sideroad culverts (city or county roads) use a 50-year flood. For entrances and driveways, use a 10-year flood unless the mainline is adversely affected. For temporary culverts under a “runaround”, generally use the 5-year discharge.

For pipes or RCB's sized less than 6'x6' within rural basins with drainage areas less than two square miles (1280 acres), the Iowa Runoff Chart (see commentary) or the Iowa DOT culvert program may be used.

For RCBs sized 6'x6' or larger or drainage basins between 2 and 20 square miles, a thorough review of basin characteristics and history of flooding along with engineering judgement is needed when determining design discharges for small basins. For designer reference, accuracy of AEPD estimates for small drainage basins in Iowa using different calculation methodologies have been studied by the USGS. Results are presented in USGS SIR 2015-5055.

For drainage areas greater than 20 square miles, USGS Scientific Investigation Report 2013-5086 may be used.

The USGS has developed a web based program called "StreamStats" that calculates the estimated peak discharges from Report 2013-5086. The program will delineate a watershed from a point as long as the stream is shown as perennial flow (solid blue line) on a USGS topographic map. The designer may use LiDAR or other more accurate information to check the results for accuracy and to determine the appropriate drainage area.

USGS Report 2013-5086 has defined three different regions for the state and utilizes a three-variable equation for each region. For basins that cross region boundaries (multi-region basins), StreamStats will provide an estimated peak discharge for each region within the basin and a weighted AEPD estimate per SIR 2013-5086 based on the ratio of the area of each contributory flood region to the total basin area (See BDM 3.2.2.1).

If a proposed culvert is located within a drainage basin where 25% or more of the watershed is developed, urban hydrology should be considered. For urban basins with less than 160 acres, the Rational Method may be used for determining peak discharges. For urban basins larger than 160 acres, the design storm runoff may be analyzed by other methods such as TR-55 for watersheds up to 2000 acres. For basins larger than 2000 acres, TR-20, HEC-HMS or other programs may be used.

When a proposed culvert site is located near a USGS stream gage, is within a detailed FIS or requires DNR approval the designer should refer to the Bridge Hydrology Section under BDM 3.2.2.1.

4.2.2 Hydraulics

For culvert hydraulics, use FHWA's publication, "Hydraulic Design of Highway Culverts," Hydraulic Design Series No. 5 April 2012. Computer software such as the Iowa DOT culvert program, HY-8 or Haestad Methods' "CulvertMaster" is also acceptable for analyzing computer hydraulics. The Iowa DOT Culvert program is available on the DOT website. Check with the bureau for approval of other software.

Culverts should generally be designed to have one foot to two feet of head above the top of the opening at the design discharge. This can be exceeded in some instances if the culvert is under high fill and there is minimal flood damage potential upstream. For culverts with the potential to impact insurable structures, the Q100 design head should be minimized.

An Iowa DOT standard pipe apron should typically be analyzed with an entrance loss coefficient (Ke) of 0.5 (square edge with headwall). This is the value used in the Iowa DOT culvert program. A Ke value of 0.5 will account for conditions in the field (sediment, debris, etc.) as opposed to the pristine flume studies that were used to determine the entrance loss coefficients.

For RCB projects, the Bureau has developed parallel wing headwall standards for both cast-in-place and precast box culverts which should be used in typical situations. An entrance loss coefficient (Ke) value of 0.4 is recommended for both types of parallel wing headwalls.

The recommended use of an entrance loss coefficient Ke of 0.4 for the Iowa DOT parallel headwall standards is based on the University of Iowa Study "Determination of Entrance Loss Coefficients for Pre-Cast Reinforced Concrete Box Culverts (SPR-90-00-CULV-011)", dated December 2012. At the time of the study, the Iowa DOT CIP headwalls were flared. However, to make the alternatives more equitable between precast and CIP, the standard CIP headwall has since been updated to a parallel geometry. A bevel was incorporated along the inlet and wings to improve the hydraulic performance.

To improve RCB inlet capacity in rare critical upstream situations, hydraulic designers may choose to use the cast-in-place flared wing standards which are available for limited use. In this case, an entrance loss coefficient (Ke) value of 0.2 is recommended.

The Iowa DOT culvert program is commonly used for most of the Bureau's RCB projects. It conservatively estimates the headwater depths equivalent to the energy grade line (e.g., a velocity = 0 ft./s at the entrance of the culvert). For projects that could impact high damage potential structures, it is recommended that HEC-RAS be used to more accurately determine water surface elevations upstream of box culverts.

For larger culverts where the drainage area requires a DNR permit or is located within a detailed Flood Insurance Study area, the design will be similar to what is required for bridges.

For RCB's 6 ft. in width and larger, the designer should consider burying the flowline (invert) up to 2 feet below design outlet channel thalweg (DOCT). The DOCT represents the low-flow outlet channel thalweg. The additional depth will promote a natural stream bottom through the culvert, provide a lower invert in the event of stream degradation and surge hydraulic capacity. For example, if an RCB flowline is set 2 feet below the DOCT, the DOCT is the maximum elevation anticipated that sediment would accumulate over time within the RCB. Sediments should be blown out during floods. Excavate and embed revetment at inlet/outset sumps to the RCB flowline (when justified).

For channel (live bed sediment transport) locations, the culvert depth below DOCT will not be considered for Regulatory hydraulic performance (compliance with IADNR, NFIP, etc.). This depth can be considered, up to 2 ft., for operational hydraulic performance dependent on the stream bed material. If the stream bed is composed of silt or coarse sand and finer, it can be assumed that a major flood event will result in scouring to this depth. For multi-barrel RCB's, consideration of this additional depth in hydraulic capacity assumes installation of self-cleaning RCB features [BDM 4.5.14].

For overflow (clear water sediment transport) locations, the culvert depth below DOCT up to 2 ft. can be considered for Regulatory hydraulic performance (compliance with IADNR, NFIP, etc.). Early coordination with regulatory agencies is recommended when the culvert buried depth is considered for determining compliance with regulatory criteria. For operational hydraulic performance, up to 4 ft. below DOCT can be considered. Since infilling of the culvert will be silt and fine sand, it can be assumed that a major flood event will result in significant scouring of the culvert invert. Design thalweg for overflow locations is considered the thalweg elevation of the outlet ditch or channel.

Inclusion of the additional depth below design thalweg in determining hydraulic capacity per the above will be as determined by the Engineer certifying the Hydraulic design.

When the upstream terrain is very flat, be aware that a calculated highwater may not be reached due to large available flood storage. In this circumstance, the designer may need to consider less culvert height and more width to accommodate flows at lower water surface levels. In some instances, a ditch dike may be needed at the inlet and sometimes outlet to prevent diversion when designing a culvert.

4.2.2.1 Riverine Infrastructure Database

For new and replacement projects with drainage areas greater than 10 sq. mi. a Riverine Infrastructure Database (RIDB) dataset shall be developed. Refer to BDM 3.2.2.8 for guidance on developing the RIDB dataset.

4.2.3 Culverts in Series

If two culverts in series are near each other, such as a mainline culvert and a culvert downstream under a ramp, generally keep the slope between the culverts to a minimum, perhaps 1% or less. This helps avoid erosion between the culverts. If a significantly steeper slope is unavoidable, a rock-lined ditch may be needed.

The hydraulics of the culverts in series should be carefully checked to accurately determine the influence of one culvert on any upstream culverts (e.g. the headwater created from the downstream culvert should be considered in determining the tailwater for the next upstream culvert in the series).

4.2.4 Bedding and Backfill

All pipe culverts under primary and secondary roadways shall meet the Class “B” Bedding and Backfill requirements and for temporary pipes, entrances, driveways and levees or dikes, Class “C” Bedding and Backfill per DB SRP DR-101 should be used.

For box culverts, the backfill requirements are shown on DB SRP DR-111.

4.2.5 Settlement and Camber

The Soils Unit of the Design Bureau provides estimated settlements for culverts on relocated or raised highway embankments. The estimated settlements for pipe culverts can be mitigated per DB SRP DR-102. The camber should be noted in the appropriate column on the pipe culvert bid tabulation 104-3.

For box culverts where the settlement is estimated as 6 inches or greater, the culvert shall be cambered. Bell joints shall be provided when anticipated settlements are 12 inches or greater for CIP single box culverts and 6 inches or greater for CIP twin and triple box culverts. Regardless of the estimated settlement, bell joints shall be provided when the fill is greater than 35 feet. See BDM Article 7.2.4.5.3 for additional information on bell joint requirements. When the anticipated settlement is 12 inches or more, a single line precast RCB option is not allowed. When the anticipated settlement is 6 inches or more, precast side-by-side single cell and precast multiple cell boxes are not allowed.

This paragraph is focused on situations where it is proposed to add new fill near to existing bridge substructures, for example when replacing a bridge with a culvert. Downdrag on existing piles occurs when placement of the new fill causes settlement of compressible soils below the fill. Bridges in service, during or after placement of the additional fill, need to be evaluated for the additional downdrag forces. This could impact staging, maintenance of traffic, and the overall project concept. Therefore, when considering this type of work, the Concept Team shall coordinate early with the Soils Design Unit. In some cases, final bridge design will also need to be consulted. A potential downdrag issue shall be identified on the BSB Attachment for Concept Statement. When applicable, the Concept Statement shall include preliminary downdrag mitigation cost.

4.2.6 Minimum Allowable Cover

Minimum allowable cover for all concrete and metal pipes is 2 feet for roadway and 1 foot for entrance culverts, measured at the edge of shoulder [DBDM SRP DR-102 & DR-104]. The top of the structure

should be at or below the subgrade elevation within the roadway limits (outside to outside of shoulder). Minimum cover for culvert in a divided roadway for the median is one foot.

When minimum cover cannot be obtained with a single round pipe, consider using low clearance pipe or twin pipes. Also, the designer may use a concrete pipe or a low clearance pipe with end wall. Other options include partially burying a larger diameter pipe while providing an equivalent water area or recommending a cast-in-place drop inlet. Total cost of the various structure options considered shall also be a determining factor.

When specifying an arch or elliptical pipe, the bid item should reference the round pipe equivalent (e.g., 48" Equivalent Low Clearance Reinforced Concrete Pipe). Also see DB SRP DR-202.

Spacing for twin pipes shall be approximately 2-3 feet between culvert walls or as needed to provide at least 6 inches between the flared outside edges of the aprons.

[Reference DB SRP DR 201-206]

Minimum fill height (cover) for Reinforced Concrete Boxes (RCB) is measured at edge of shoulder. For precast RCBs minimum cover is 2 feet. For cast-in-place RCBs cover less than 2 feet is allowable. The top of the structure should be at or below the subgrade elevation within the mainline pavement limits (typically outside to outside of lanes).

For projects where future widening is planned, minimum cover should be measured based on the ultimate lane configuration.

4.2.7 High Fill Pipes

For culvert installations where maximum allowable cover is exceeded, as indicated on the DBDM SRP DR-102 & DR-104, pipe strength may be modified to account for the additional cover. While standard pipe strength ranges from 2000D to 3750D, the concrete pipe industry does provide higher pipe strengths of 4000D and above for high fill situations. Prior approval from the Unit Leader is required.

4.2.8 DB Standard Road Plans and Road Design Details

See the commentary for guidelines on properly using the Road Design Standard Road Plans and Road Design Details.

4.2.9 Stream Stability

For larger culverts, with spans greater than 8', the designer shall consider the stream stability guidance within BDM article 3.2.2.10. The article provides guidance on determining the location and depth of degradation within streams, and types of possible design solutions including structures with flumes. For culvert projects, the streambed profile determination guidance can be utilized to define design streambed elevations, channel slope, and proposed culvert flowlines. Buried culvert flowlines would be relative to the design streambed.

If downstream channel degradation is identified, designers should be aware of potential concerns. At a culvert outlet, the damage from degradation might include headwall settlement, joint separation, or undermining. Precast box culverts are not as robust regarding degraded streams as cast-in-place box culverts. The increased number of joints and the tie-bolt joint connections between each precast element are more at risk for piping failure.

4.3 Culvert Plan Preparation

For Connect projects, Plat Plans are no longer required for pipe culverts designed by consultants. The plan and profile for an RCB culvert or pipes with flumes or drop inlets will require final structure design and should be developed as a TS&L (see Commentary for an example of an RCB TS&L).

The TS&L should include enough ground elevations and contours to accurately define the area. All draws, banks, existing structures (including flowlines and lengths), fence lines, tile lines, utilities, and other pertinent existing features should be shown. The proposed structure, including flowlines, lengths, skews and special features should be shown. See the culvert plan review checklist for information to include on TS&Ls for RCBs.

Ground elevations should be shown along the drainage way at least 100 feet upstream and downstream of the culvert. Contours should be clearly labeled. Proposed toe of slope lines (fore slope, ditch lines, back slopes) should be shown at least 150 feet ahead and back of the culvert stationing.

Both the plan and the profile view should be plotted with a 1”=40’ scale as measured on an 11”x17” drawing. (This refers only to the plotted scale and does not refer to any “working scales” as used while actually in a CADD file.) Do **not** use an exaggerated scale in the profile view.

For Connect projects, the culvert should be oriented horizontally on the TS&L sheet, with the roadway position consistent with the culvert skew. It follows that RCB bend(s) will be oriented on the TS&L sheet at the defined bend angle to the horizontal. The profile view is drawn as a Longitudinal Section along centerline culvert. Therefore, for skewed culverts, the true length at centerline will be represented on the profile view. Generally, the match line for RCB plan and profile view shall be the roadway centerline (or baseline), or as close as practical.

For pipe culverts with concrete flumes, drop inlets or other features that require structural design, the plan should be developed as a TS&L.

Sample plans may be found online with the review checklist for both pipes and RCBs.
Preliminary Design Checklist - RCB Culvert or Preliminary Design Checklist -Drainage

4.3.1 Culvert Database (old Pink Sheets)

The DOT maintains a culvert database (Bridges&Structures.accdb) where all new and replacement culverts shall be stored. The database serves as a repository for all culvert information going forward and to provide a means to automate the creation of the 104-3 Tab and Culvert Schedule Sheet for project development. Usage of the database is described in online workflow documentation CW08 Entering Pipe and Structure Information into Database.

The database format allows for documentation of existing conditions such as drainage area, culvert flowlines, condition of the structure and other properties. The database also documents the proposed culvert properties such as size, type, Standard Road Plan (DR series), proposed flowlines, lengths, and other design features. For a complete list of database requirements, refer to the workflow documentation.

For pipe design, the pink sheet calculation method, and submittal of hard copy or scanned Pink Sheet forms are no longer required by the Preliminary Bridge Unit. Proposed culvert lengths will be determined graphically as opposed to the computational method on the original pink sheets. The ORD file with models, the culvert database, Culvert Schedule Sheet, ASCII text file, and Hydrology/Hydraulic Support data submitted in their proper subfolders within the Project Directory are considered sufficient to serve as the culvert design record.

4.3.2 Pipe Sizes

In general, concrete pipe culvert sizes will range from 18 to 84 inches in 6-inch increments. Minimum pipe size for roadways, side roads, and ditch letdowns is 24 inches. This provides adequate opening for maintenance inspections and minimizes the potential for plugging with debris. Details for other available sizes and types are shown on [DB SRP DR-104]. For areas with low clearance or minimum cover, an arch pipe or smaller diameter twin pipe culverts can be used. See BDM 4.2.6 for information on minimum cover. For arch pipe equivalent diameters, refer to [DB SRP DR-202].

Preferred minimum size for median pipes for divided highways is 24 inches. In some instances, the median ditch may be too shallow to place a 24-inch pipe under the pavement and subbase, and D sections with various bevels may be used. For areas with minimal drainage or clearance restrictions such as a gore area, an 18-inch pipe may be used. A concrete apron with end wall may also be considered to provide additional clearance. Refer to [DB SRP DR-205] for details.

Minimum pipe size for entrances is 18 inches.

The site history of the existing culvert may provide useful information when sizing a proposed culvert. IDOT maintenance personnel may have information related to landowners' complaints or road overtopping, which may indicate a larger structure should be designed or the road grade needs to be raised. Any such history should be documented in project files.

4.3.3 Culvert Type

For most highway locations, concrete pipe is required under the road. For highway locations where there is less than 3000 ADT (Average Daily Traffic) and the highway is not an NHS (National Highway System) route, the culvert type used shall be bid as Unclassified Roadway Pipe (Coated CMP or HDPE pipe). For an extension of an existing concrete pipe culvert or small box, the extension will be bid as concrete pipe regardless of the ADT. The ADT is estimated for future 30-year traffic.

Concrete pipe culverts shall be used under all highways with greater than 3000 ADT or designated as an NHS route, including county or city roadways.

Corrugated metal pipe shall be specified for any temporary pipes used for roadway construction staging purposes (aprons are generally not needed). For bridge replacement projects utilizing a temporary run-around, concrete pipes with inlet/outlet aprons shall be specified instead of CMP to reduce the potential for uplift.

Unclassified Entrance Pipes (Non-Coated CMP, HDPE or Concrete) shall be specified for entrances and driveways. Culverts under county or city roads should be replaced in-kind. When a new culvert is proposed under a side road, the local jurisdiction should be consulted for their preference regarding culvert type.

New or replacement stock passes shall be 6’ x 7’ precast RCB. Existing stock passes can be extended utilizing DB RDD 510-4.

Precast RCBs are typically bid as an alternative to Cast-in-Place for single, twin and triple box culverts. See BDM 4.5.2 for more information.

4.3.4 Horizontal Alignment

Generally, culverts should be aligned with the waterway, especially on the outlet end. However, high skews should be avoided where possible to minimize costs. New or replacement pipe and box culverts shall be designed with a whole degree skew to the roadway alignment. Culvert and excavation costs

should be considered when selecting the alignment. The constructability of the culvert during traffic staging, including maintaining drainage during construction, may also be an important factor.

4.3.5 Vertical Alignment

Generally, the slope of a pipe or box culvert should approximate the natural stream or draw slope. When the slope of a pipe culvert is 5% or steeper, give consideration to a culvert type such as DB SRP DR-611 or DR-641. When the slope of a box culvert exceeds approximately 2%, give consideration to some type of energy dissipater such as a drop inlet, impact basin or a flume outlet. Also, give consideration to putting in verticals breaks in the slope, such as a “broken back” culvert, to minimize outlet velocities.

4.3.6 Length Determination

The length of culvert is determined by either the clear zone or by matching the proposed cross section, such as the barnroof slope. See the commentary for design aid "Determining Culvert Lengths” which provides a more detailed explanation of how to determine this length. For Connect projects, the proposed embankment terrain surface intercept can be utilized in determining a culvert length instead of a pink sheet. For skewed culverts, the determined length must include getting all corners of a headwall or top of pipe/apron far enough out to intercept the embankment terrain surface and extend beyond the clear zone. See DB RDD 4311 for fore slope shaping and cover for extensions or spot replacement culverts.

It should be noted that clear zone distance is measured from the edge of traveled way and the design speed is 5 mph greater than the posted speed. See [DB DM 8A-2]. Clear zone is determined by the Design Bureau.

Pipe lengths are typically based on the horizontal length, except when the slope length is indicated by the Design Bureau Standard Road Plan (SRP) details. Calculated concrete pipe lengths will be rounded up to the nearest even-numbered foot. Calculated lengths of Unclassified pipes will be rounded up to the nearest foot.

RCB barrel lengths shall be based on the horizontal, with the length along slope typically being neglected. The length of cast-in-place (CIP) reinforced concrete box culverts shall be referenced from the back to back of parapet rounded up to the nearest foot. Precast box culvert barrel lengths (not the back to back of parapet) shall be rounded up to the nearest foot.

The designer should note that our policy for determining box culvert length differs between precast and CIP. Culvert length for the CIP option is determined by the foreslope intercept with the top of parapet, while the length for the precast option is determined by the intercept with the top of box. For more information on precast box culvert layout requirements, refer to BDM article 4.5.2.

4.3.7 Culvert Tabulation Sheets

Culvert Schedule Sheet
The Culvert Schedule Sheet is a summary of culvert information to serve as a project record. Culvert length, flowline, and other pertinent information is tabulated. The Sheet will be created for the B02 event through an automated process utilizing the project culvert database. See Commentary C4.3.7 for an example.

104-3 Tab - Drainage Structures by Road Contractor

The 104-3 tab is a summary of pipe culvert information for a project. Culvert length, flowline and other pertinent information is provided to the contractor for construction of the drainage structures. This tabulation shall be completed by the Design Bureau through an automated process utilizing the project culvert database.

110-9 Tab – Culvert Abandonment and 110-2 Tab – Removal of Existing Structures

Existing culverts that need to be removed or plugged and abandoned should be designated in the appropriate tab. Existing culverts within the project limits that are not specifically listed as removals or abandonments, will be used as constructed. These tabulations shall be completed by the Design Bureau with coordination from the Bridge Bureau for the B2 event date.

104-4 Tab – Roadway Items for Drainage Structures Installed by Culvert Contractor

This tabulation sheet is used for box culverts or other structural designs and is to be completed by the Design Bureau during final design as needed.

4.4 Pipe Culverts

4.4.1 Extensions

Existing RCBs and pipes shall generally be extended with an equivalent size and shape to closely approximate the hydraulic opening. For example, extend a 2’ x 2’ RCB with a 30” RCP culvert, and extend a 3’ x 2’ RCB with a 37” x 23” concrete arch pipe or a 36” RCP.

For skewed RCBs, the pipe culvert should be cut to the skew angle of the headwall so the pipe can be placed flush with the face of the parapet. For headwalls with a skew angle greater than 30 degrees, it may be advantageous to cut the barrel of the RCB so that the pipe can be connected better with the RCB. Use DB SRP DR-122 to connect the RCB to the pipe with a Type “C-2” concrete adapter for pipe culvert connections. The largest RCB for extension with a pipe is 6’ x 6’. See chart below for appropriate pipe size extensions.

RCB EXTENSIONS WITH PIPES

RCB Width x Height	Round Pipe Extension Size	Low Clearance Pipe Extension Size
2' x 2'	30"	
3' x 2'	36"	37" x 23"
3' x 3'	42"	
4' x 2'		52" x 32"
4' x 3'	48"	59" x 36"
4' x 4'	54"	
5' x 3'		65" x 40"
5' x 4'	60"	
5' x 5'	66"	
5' x 6'	72"	
6' x 4'		88" x 54"
6' x 5'	72"	
6' x 6'	78"	

The pipe and the DB SRP DR-122 connections should have adequate earth cover and not project up into the subgrade or shoulder. There is not a practical equivalent low clearance pipe shape for some existing RCBs (such as a 6’ x 3’), so consider using the largest practical precast size that provides adequate

hydraulic opening. If adequate earth cover is not possible with a precast extension, these RCBs may need to be extended in-kind.

A horizontal or vertical change of alignment between the existing pipe and the pipe extension requires an adapter (DB SRP DR-122 or DB SRP DR-141). See the Commentary 4.2.8 DB SRP and RDD for more details on adapters, elbows and “D-sections”

See DB SRP DR-Series typicals for determining and labeling skews of extensions that are skewed to the existing culvert and/ or skewed to the roadway.

4.4.2 Median Pipes

Median drains should be placed to maintain the natural drainage as much as practical. Maximum spacing of median drains is 2000 feet in sag vertical curves and 1500 feet on tangent grades. For tangent grades greater than 2%, consideration should be given to 1000-foot spacing. If 18-inch diameter median drains must be used, spacing should not exceed 1000 feet.

For safety and settlement reasons, median drains should be placed transverse to the centerline of the roadway rather than "teed" into a crossroad pipe. These drains should generally outlet to the upstream side of the highway, when practical, so that outlet velocities and erosion is confined to the highway right of way and will not adversely affect adjacent property. An exception to outletting upstream is when outletting along the flood plain of a stream. In those instances, the median pipe should drain to the downstream side of the highway to minimize water backing into the median.

Median pipes can be designed with up to a 10% slope due to the small drainage area (2 to 3 acres) and short duration of peak flows. There are instances when a median pipe has been designed to outlet onto the roadway embankment but the preferred method is to outlet the pipe to the ditch. Allowing drainage to outlet onto a roadway embankment instead of a ditch can cause long-term maintenance and embankment stability problems.

When a straight concrete median pipe does not have sufficient vertical clearance under the pavement (minimum 2 feet), the designer should utilize a vertical bend created by single bevel “D” section (see SRP DR-141 and DR-613). A typical situation for use of a “D” section with a median pipe occurs for 4-foot median ditches on a multi-lane highway or interstate or when a widening project to the median side reduces the median ditch depth making it difficult to fit a straight median pipe under the pavement.

Where left turn lanes are present, consider a pipe near the median crossing, and another pipe at the beginning of the turn lane with a median dike to capture most of the drainage.

Vertical riser pipes into RCBs or pipes are generally not preferred.

4.4.3 Cross Road Culvert Letdowns

When the slope of a cross road culvert exceeds 5%, a letdown structure should be considered (see DR-641). Under Standard Road Plan DR-641, a concrete pipe is required under the roadway and either a coated CMP or HDPE can be used for the letdown.

If a culvert diameter is greater than 42 inches, a concrete flume should be designed to outlet the drainage. Culvert letdowns larger than 42 inches have a greater potential for failure.

4.4.4 Ditch Letdowns

Designing the outlets of letdowns through an RCB wall or flume wall is not desirable due to potential cracking in these walls. Rather, the outlets can be set beyond the headwall or on top of the wingwall or flume wall. The pipes should be anchored to the wall if resting on top of it.

Although the use of culvert letdowns is dependent on site conditions, a rough rule of thumb is that drainage areas of up to 10 acres or less do not warrant culvert letdowns. In those instances, a riprap letdown could be considered. The existing site conditions often provide helpful information in deciding if a culvert is necessary. For example, if the existing side ditch does not have a letdown or any erosion problems, then the proposed project may not need one either.

Consideration should be given in some circumstances to ditch treatments such as special ditch control, turf reinforced mat, erosion stone, or riprap. Cost, type of soil, ditch slope, drainage area, and the preferences of the local DOT maintenance personnel are all factors in determining the proper ditch treatment.

4.4.5 Culvert Liners

Some common problems with culverts approaching the end of their design lives include corrugated metal pipes that have rusted through, concrete pipes where joints have separated and soil is coming through the joints, and small box culverts with deteriorated floors and walls where concrete is spalling badly and reinforcing steel is exposed and corroded.

Traditional solutions include open excavation and replacement, or jacking a new culvert alongside the existing one. However, another option is to push a liner, either metal or plastic, through the existing culvert and then grout the void between the liner and culvert.

There are many important factors to consider when designing and installing a liner.

Advantages of these types of liners are as follows:
1. Installation is quick, generally less than a day, which is significantly less than it takes to excavate, remove, replace, cover, and place new pavement.
2. Traffic disruption is minimal, which is especially important for higher-traffic roads.
3. Equipment needs are minimal compared to conventional cut and cover.
4. Since open excavation is not needed, spot pavement replacement is not needed.
5. Potential settlement caused by excavating and then backfilling is eliminated.
6. Lining a pipe may be less expensive than open excavation or jacking, but comparisons should be made at each site. Obviously, as fill heights increase, the costs of open excavation increase.
7. DOT maintenance forces may be able to install the liner, although contracting this work is also an option.

Disadvantages are as follows:
1. If the culvert has some bends or poorly aligned joints, a liner may not work unless it is significantly smaller than the existing pipe. Metal or PVC liners will bend very little, if at all. Polyethylene liners can bend a small amount, but if bent or kinked too much, the strength of the pipe may be significantly reduced leading to cracking or buckling in the future.
2. Reduced hydraulic capacity is potentially one of the biggest drawbacks to liners. Each site should be reviewed in the field and for existing and proposed hydraulics. Examine the risks of potential flooding upstream, water over the road, and inadvertent diversion of drainage during high flows to a culvert in an adjacent watershed. A full hydraulic analysis of both the existing and liner culverts should be made, including inlet and outlet control calculations. At least one pipe liner manufacturer suggests that a smooth liner with a lower Manning's n-value will give better hydraulics than an existing culvert with a higher n-value. However, this may not be true depending on site conditions, so the full hydraulic analysis is important.

3. Both corrugated metal and plastic liners are defined as flexible pipes and therefore do not have much strength to carry earth pressures without surrounding material, such as grout, to support them. Without this support, the liner can crush or fail over time. If the liner is installed in a concrete pipe where the joints have pulled apart slightly but the pipe itself is still in good condition, the existing concrete pipe may still carry the earth load for many years. However, if the culvert is in very poor structural condition, such as a badly corroded metal pipe, the liner will need to carry all the earth load. Therefore, the backfill material, i.e., grout, is critical. Do not underestimate the importance of this.
4. The life of the liner material may not be as long as the life of a concrete pipe installed by jacking or open excavation.

A higher headwater depth (2 to 4 feet above the top of the culvert) can be considered for culvert liners as long as the upstream flood plain has a low damage potential and the headwater elevation will not cause roadway overtopping.

4.4.6 Culvert Maintenance

{Text for this article will be added in the future}

4.4.7 Uplift of Culvert Inlets

For corrugated metal or polyethylene pipes with diameters of 48” and larger, cast-in-place headwalls, precast concrete aprons (DB SRP DR-201), or concrete collars should be considered on the inlet to prevent failure due to uplift forces. For 48” to 84” diameter culverts, an alternative is to use a concrete pipe instead of CMP. For temporary run-arounds used to maintain traffic, use concrete pipes to reduce potential for uplift at the culvert inlet.

4.4.8 Trenchless Construction

There are many situations where trenchless construction to replace a culvert is preferable to open cut construction especially on high ADT roadways or where out of distance detours are long. Most trenchless construction methods may have a higher dollar cost than that of their open cut counterparts. However, one needs to consider the benefits that trenchless construction provides and weigh all the costs before deciding against using a trenchless technique (especially for excavations greater than 10 feet). Trenchless construction avoids the cost of pavement removal and replacement, dewatering, staging and traffic control. The benefits of trenchless construction also avoid inconvenience to the traveling public and lost business revenue caused by a closed roadway; minimizing utility conflicts; avoiding potential safety issues and other environmental impacts.

The preferred method for jacking a culvert is from the downstream side to the upstream inlet. Trenchless construction can be performed from the upstream side of a highway if environmental or ROW issues dictate. However, for larger culverts (e.g. 54 inch or greater) and for grades of 2 percent or more, it may not be possible to jack from the upstream side. Consultation with the trenchless industry is recommended when a site requires jacking a culvert from the upstream side. The minimum temporary easement area for a jacking pit is 60 feet from the embankment and 50’ ahead and back for access and the storage of materials.

4.4.9 Slope Tapered Inlets for Pipes

Slope tapered inlets for pipe culverts can be used to reduce construction costs by reducing pipe sizes when the elevation difference between inlet and outlet is at least four to six feet. Cost savings may be realized when the culvert length is greater than 150 feet. Due to high velocities and large drop in elevation, most tapered inlet culverts will need a flume and a basin to dissipate energy.

Design guidelines for slope tapered inlets for pipe culverts are shown in the commentary.

4.4.10 Revetment for Pipes

To address regulatory changes requiring stream mitigation for the placement of revetment, the outlet of all new, replacement or extended pipe culverts will no longer require revetment splash basins to minimize scour/erosion (DB SRP EC-301). The need for revetment will be determined and justified on a case-by-case basis. ~~by the Design Bureau, unless the preliminary designer communicates a need.~~ Preliminary designers may refer to the commentary BDM C4.5.8 for guidance. Revetment will typically not be required at the inlet of culverts. Revetment will be shown on the CADD design file~~-~~by the preliminary designer~~the Design Bureau,~~ and the preliminary designer ~~Design Bureau~~ will calculate revetment quantities for cross road culverts, median pipes and RCBs extended with pipes.

Splash basins for median pipes will depend upon the ditch grade they outlet to. Consultation with the Design Bureau may be necessary when determining if a median pipe will require a splash basin.

4.4.11 Fish Passable Pipe Culverts for Regulatory Compliance

The Location and Environment Bureau (LEB) will identify streams at culvert locations that are classified as Waters of the United States (WOTUS) and require fish passage at the W00 (Preliminary Wetland Review) event. When a culvert location is identified as WOTUS and requires fish passage, any new or replacement culvert 48 inches and greater in diameter must be buried at least 12 inches below the natural streambed. When a pipe culvert is buried one foot below the streambed, the culvert size should be increased to the next 6-inch increment to provide sufficient hydraulic capacity (e.g., a 60” RCP buried one foot is hydraulically equivalent to a 54” culvert).

For locations not identified as WOTUS or not requiring fish passage, the culvert may be designed to match the natural streambed or as determined by the designer. For pipe culvert extensions, fish passable mitigation will not be required for the design of the extension.

Revetment for buried pipes shall match the natural streambed and be placed at the inlet and outlet for all new and replacement culverts per Standard Road Plan EC-301. Revetment at the inlet is intended to mitigate the potential for the stream to head-cut (degrade) upstream of the culvert. The Design Bureau will calculate the revetment quantities for cross road culverts, median pipes and RCBs extended with pipes.

4.4.12 Temporary Run Around (on-site detour)

For some smaller stream bridge replacement projects that do not have a good detour, a temporary run around using pipes to handle drainage may be considered for maintenance of traffic. Concrete pipe(s) with inlet and outlet aprons shall be used in lieu of CMP(s) to reduce potential for uplift. Connected pipe joints are recommended (DR-121), and if the site is located in the Loess Hills, it is recommended that the joints be wrapped. The pipes shall be designed to pass a 5-year flood to meet headwater guidance and below the edge of travelled way. A Plan Sheet for Temporary Detour Pipes at a Stream Crossing is required to be provided with the B2 deliverable, intended for placement in the road plans.

In order to minimize embankment material cost and environmental/ROW impacts, the roadway profile for a run around will often be lower than the adjacent roadway. To reduce the risk to the travelling public during the temporary conditions, a Monitoring Plan (a.k.a. Plan of Action or POA), shall be implemented. Preparation of a Bridge Watch Dataset, including a Monitoring Plan shall be developed by the Preliminary Design engineer. For more information on the Monitoring Plan requirements, refer to BDM 3.15. The dataset will need to be modified as needed per the differences between a temporary bridge and roadway with culvert(s). When the temporary run around is to be put into service, the DOT Preliminary Design Unit Leader shall be notified by the contractor, and the DOT shall implement the site Monitoring Plan (POA). The following note shall be placed on the top left corner of the replacement bridge TSL sheet:

“The temporary run around shall be monitored for the duration that it is under traffic. When the

construction of the run around is installed, the contractor shall notify the Preliminary Design Unit Leader at 515-233-7949 so a Flood Management Plan can be developed in advance of the temporary run around being put into service. Upon notification, the DOT will add the site to the Bridge Watch Management Plan for monitoring."

4.4.13 Flap Gates for Pipes

There are situations where a proposed pipe needs a flap gate to prevent downstream channel water from backing up to the upstream side. One example is replacing an existing pipe with flap gate through a drainage district dike or agricultural berm. Reinforced concrete pipe is preferred even if the existing pipe is unclassified. For a typical situation with agricultural fields on the upstream side, a moderate performance flap gate is recommended.

A modified SW-402 Storm Sewer Manhole is used at the outlet which serves to support the flap gate attachment. The modified SW-402 details do not require a final structural design unless multiple pipes with flap gates are proposed which utilize the same outlet structure. The preliminary designer shall list all of the modified SW-402 variable dimensions in the culvert tabulation remarks.

Pipe flowlines should generally be similar to the existing flowlines for a replacement structure. The pipe outlet flowline should provide at least 7-inches from the bottom of pipe wall to the bottom well elevation to allow for sufficient rebar placement. The pipe outlet flowline should generally be part way up the channel bank to reduce potential for siltation at the flap gate.

Contact the BSB Preliminary Design Unit for information on the bid item flap gate reference notes and modified SW-402 details (See Commentary). The preliminary designer shall deliver these items in the project directory Design Events B02 folder, for incorporation into Road Design's grading plans.

If a pipe with flap gate is proposed through a Flood Risk Reduction Project levee, see BDM 3.10.1 and the USACE guidance for Section 408 approval. A more substantial gate may be required.

4.5 Reinforced Concrete Boxes (RCBs) and Designs

4.5.1 Cast in Place RCBs

The following standard box culvert sizes are measured in feet of clear Span x Height. Culvert sizes are available in 1'-0 increments with the sizes listed below. These standard sizes should be used whenever practical. No RCBs smaller than a 3' x 3' shall be used. Cast-In-Place (CIP) Twin and Triple Culverts are multiple barrels sharing common interior walls, i.e. Twin 12 x 8 is two 12-foot spans with a height of 8 foot.

SINGLE REINFORCED CONCRETE BOX CULVERT STANDARDS (span x height in feet):

3 X 3										
4 X 4										
5 X 3	5 X 4	5 X 5	5 X 6							
6 X 3	6 X 4	6 X 5	6 X 6	6 X 7	6 X 8					
8 X 4	8 X 5	8 X 6	8 X 7	8 X 8	8 X 9	8 X 10				
10 X 4	10 X 5	10 X 6	10 X 7	10 X 8	10 X 9	10 X 10	10 X 11	10 X 12		
12 X 4	12 X 5	12 X 6	12 X 7	12 X 8	12 X 9	12 X 10	12 X 11	12 X 12		
14 X 4	14 X 5	14 X 6	14 X 7	14 X 8	14 X 9	14 X 10	14 X 11	14 X 12	14 X 13	14 X 14
16 X 4	16 X 5	16 X 6	16 X 7	16 X 8	16 X 9	16 X 10	16 X 11	16 X 12	16 X 13	16 X 14

Fill range for standard Cast-In-Place Single Box Culverts is 0 to 55 feet for 3' to 12' span RCBs and 0 to 16 feet for 14' and 16' span RCBs. Design fill height is defined as the maximum depth of fill measured from the top of pavement to the top of the Culvert.

TWIN REINFORCED CONCRETE BOX CULVERT STANDARDS (span x height in feet)

8 X 4	8 X 5	8 X 6	8 X 7	8 X 8	8 X 9	8 X 10		
10 X 4	10 X 5	10 X 6	10 X 7	10 X 8	10 X 9	10 X 10	10 X 11	10 X 12
12 X 4	12 X 5	12 X 6	12 X 7	12 X 8	12 X 9	12 X 10	12 X 11	12 X 12

Fill range for standard Cast-In-Place Twin Box Culverts is 0 to 25 feet.

TRIPLE REINFORCED CONCRETE BOX CULVERT STANDARDS (span x height in feet)

10 X 4	10 X 5	10 X 6	10 X 7	10 X 8	10 X 9	10 X 10	10 X 11	10 X 12
12 X 4	12 X 5	12 X 6	12 X 7	12 X 8	12 X 9	12 X 10	12 X 11	12 X 12

Fill range for standard Cast-In-Place Triple Box Culverts is 0 to 25 feet.

Standard RCB headwall skews (0°, 15°, 30° and 45°) should be used in almost all cases, even when the barrel is at a non-standard skew to the roadway. For example, if the barrel is skewed 20° to the roadway, use a 15° standard headwall with additional barrel length to account for the corner that will be closer to the roadway. Exceptions would include when the RCB headwall is near the intersection of two roads, and the slope shaping and safety on both roads need to be considered.

If a twin or triple standard size precast option with barrel size exceeding the maximum CIP multi-box standards is proposed, a similar CIP option shall be offered. For this situation, the CIP design shall be noted as non-standard on the TS&L.

4.5.1.1 Cast-in-Place RCB Headwalls

To provide relative parity between cast-in-place and precast box culvert options, the Bureau has developed parallel wing headwall standards for cast-in-place and precast box culverts which should be used in typical situations. The cast-in-place flared wing headwall standards are available for limited use in critical upstream hydraulic situations as discussed in BDM 4.2.2.

Slope tapered inlets, scour floors and pedestrian RCB culverts use flared wing headwalls.

Cast-in-place RCB headwalls shall be constructed level. An exception is a cast in place headwall for pedestrian tunnels, where sloped cast-in-place headwalls are required to maintain positive drainage (see BDM 4.5.16).

4.5.2 Precast RCBs

Unless otherwise specified, for primary road projects the bureau now allows both cast-in-place (CIP) and precast box culvert alternatives under the following project conditions:

- The culvert is an Iowa DOT standard size single, twin or triple box with standard size headwalls at both ends. For precast twin and triple box culverts use side-by-size standard size precast single boxes [SS 1082P],
- The barrel span or spans are each 6 to 16 feet,
- Design earth fill heights are in the range from 2 feet to 25 feet,
- The culvert is not placed directly on bedrock,
- Anticipated culvert settlement is less than 12 inches for single boxes and 6 inches for twins or triple box culverts under these fill heights, and
- There are no conditions requiring bell joints or other details which are available only with cast-in place box culverts.

Projects meeting these requirements will require the designer to develop plans allowing for two alternate designs: one for cast-in-place, and one for precast. If the RCB is designed with a bend, consult with the preliminary design unit leader before proceeding.

If the RCB has a drop inlet, flume, unique headwall or scour floor, the plan should allow for a precast alternate with a cast-in-place drop inlet, flume, unique headwall or scour floor as noted on the TS&L. During development of the TS&L in the preliminary design stage, the settlement is not known and the precast option may be eliminated during final plan development if it is determined that the site exceeds the settlement criteria.

The list of precast single box sizes (span x height) provided below correspond with the box sizes developed for the CIP single box culvert standards, with spans less than 6 ft. being excluded.

SINGLE PRECAST REINFORCED CONCRETE BOX CULVERT STANDARDS (span x height in feet):

6 X 3	6 X 4	6 X 5	6 X 6	6 X 7	6 X 8					
8 X 4	8 X 5	8 X 6	8 X 7	8 X 8	8 X 9	8 X 10				
10 X 4	10 X 5	10 X 6	10 X 7	10 X 8	10 X 9	10 X 10	10 X 11	10 X 12		
12 X 4	12 X 5	12 X 6	12 X 7	12 X 8	12 X 9	12 X 10	12 X 11	12 X 12		
14 X 4	14 X 5	14 X 6	14 X 7	14 X 8	14 X 9	14 X 10	14 X 11	14 X 12	14 X 13	14 X 14
16 X 4	16 X 5	16 X 6	16 X 7	16 X 8	16 X 9	16 X 10	16 X 11	16 X 12	16 X 13	16 X 14

Fill range for standard precast RCBs is 2 to 25 feet for 6’ to 12’ span RCBs and 2 to 16 feet for 14’ and 16’ span RCBs. Design fill height is defined as the maximum depth of fill measured from the top of pavement to the top of the Culvert.

Standards for precast culvert end sections are available in 0, 15, 30 and 45 degree skews. Similar to cast in place headwalls, standard precast headwall skews should be used in almost all cases, even when the barrel is at a non-standard skew to the roadway. See BDM 4.5.1 for additional guidance.

Following are the plan development guidelines for projects when precast concrete boxes are required or an alternate to cast-in-place culverts.

- The preliminary designer shall include a precast option layout model.
- Preliminary Bridge will prepare the precast option preliminary design (TS&L).
- For a single culvert pedestrian or shared use path structure through roadway embankment where a cast in place flared headwall is proposed, see BDM 4.5.16 for guidance. ~~the preliminary designer will prepare the (TS&L) for both the CIP and precast culvert options~~.

- The twin/triple precast culvert will be laid out assuming side-by-side single precast culverts with parallel wing headwalls and six-inch gap between the structures.

The designer should note that our policy for determining culvert length differs between precast and CIP box culvert options. Culvert lengths for the CIP option are determined by the foreslope intercept with the top of parapet, while the lengths for the precast option are determined by the intercept with the bottom of parapet at the top of box. The rationale for this policy difference is based on the tie-in locations for the wings. CIP wings tie-in at the top of the parapet, while precast culvert wings tie-in at the top of box. As a result, when the foreslope intercept governs the length, the barrel for the precast option will be longer than the barrel for the CIP option, but the wing will be shorter. However, when the clear zone governs, the barrel for the precast and CIP option lengths may be similar, and the flattened foreslope may vary.

The following guidelines are provided for a precast RCB layout:

- The overall back to back of parapet length will include the end to end of barrel length rounded up to the nearest whole foot increment, plus the additional end section barrel length at each end of the culvert (variable “G” as described below).
- The end section barrel length is provided in the LRFD precast reinforced concrete box culvert standards. The dimension is 6 inches for skews up to 7.5 degrees and is noted as variable “G” for higher skews. The layout should be based on Type 3 end section details.
- The overall length from back-to-back of parapet, the end-to-end barrel length, the additional barrel length as part of the end sections “G”, and the end section shall be dimensioned on the TSL.
- If the parapet of the end section is not parallel to the roadway (example a 15-degree skew standard end section with a 22-degree skewed barrel), then one corner of the parapet will be closer to the roadway than the centerline of the culvert.
    - The culvert length shall be adjusted such that the closer corner is extended to the calculated length.
    - For multi-barrel box culverts, parapet and curtain walls shall form one continuous line and shall not be staggered or offset. The designer shall adjust each culvert such that the closer corner is sufficiently extended. All the barrels will be the same design length, but the distances right and left will be different for each barrel.
    - An example layout for a 22-degree skew culvert with a 15-degree end section is provided in the commentary.
- For a single box trail or pedestrian structure, the use of flared, cast in place headwalls results in the identical calculated back-to-back of parapet length to the CIP option. See BDM 4.5.16 for additional information.
- Precast concrete box culvert end sections shall be constructed along the barrel slope.

4.5.3 RCB Extensions

Existing single barrel CIP RCB that are 6’ x 6’ or larger may also be extended with precast RCB. A connection detail that transitions the CIP box culvert to the precast box culvert is shown in the standard sheets (BSB SS 1043P-1045P). The precast box culvert extension must satisfy the same requirements for use as new precast box culvert projects (BSB BDM 4.5.2).

Precast extensions for twin and triple barrel CIP RCBs are not allowed.

4.5.4 Flumes and Scour Floors

A flume/basin can be used when there is a significant elevation difference between the inlet and outlet of a culvert. A concrete flume basin should be used in lieu of a letdown structure when the pipe culvert is greater than 42 inches in diameter. If the slope of a box culvert is excessive (greater than 2%) then a flume may be considered depending upon site conditions to dissipate outlet velocities.

So that there is adequate wall thickness around the pipe for the cast-in-place, one-foot collar, the designer shall size the flume using Table 4.5.4. Refer to BDM Figure 7.4.4.8.1 and Iowa DOT LRFD flume standards if more information is required relative to the reinforced concrete pipe flume collar and flume details.

Table 4.5.4. Flume size and height for standard reinforced concrete pipe

Reinforced Concrete Pipe Size (inches)	Flume Size (feet x feet)	Height from flowline to top of parapet (ft-in)
24	3 x 3	5'-4
30	4 x 4	6'-4
36	5 x 3	5'-4
42	5 x 4	6'-4
48	6 x 4	6'-4
54	6 x 5	7'-4
60	8 x 5	7'-4
66	8 x 6	8'-4
72	8 x 6	8'-4
84	10 x 8	10'-4

For skewed pipe culvert alignments 30 degrees and greater with an embankment slope of 3:1, the slope of the top of the flume wall should be set to 4:1 to accommodate the skew.

The flow lines for flume basins are usually set approximately 5 feet below the bed of the waterway. This allows for the natural development of a scour hole which helps dissipate the energy above the basin and create a higher tail water elevation to contain the hydraulic jump. Adequate right of way should be purchased to encompass the scour hole. Riprap is generally not needed at flumes.

Minimum cast-in-place flume length is determined by the parabolic length, L_3, as shown in OB&S Final Design Manual [BDM 7.2.4.8.1]. Maximum flume lengths should be limited to approximately 60 feet, if possible, in order to reduce settlement problems and joint separations. See the Final Design Manual for other dimensions and notes.

When less than 3 feet of drop is needed on the outlet of short lengths of RCB extensions, consider using a "scour floor" in the headwall. A scour floor is a concrete extension of the apron at the bottom of the curtain wall elevation. Scour floors may also be used in situations where streambed degradation is anticipated. See the commentary for a sample sketch.

4.5.5 Drop Inlets

Cast-in-place drop inlets are used for minimum headwater depth situations for both RCB and pipe culverts. Drop inlets can minimize the ROW required by raising the ditch grade and also provide good energy dissipation within the culvert. These inlets provide a convenient method of carrying flow from drainage tile across the roadway by discharging the tile through the inlet wall. Generally, it is good practice to replace existing drop inlets in-kind in order to prevent an increase in headwater.

See the commentary for design guidelines, a sample plan and profile, and a typical inlet detail. Design highwater elevation should not exceed the top of the butterfly wing, 3 feet maximum above the drop inlet [weir] flowline). This wing has two purposes: 1. To hold the fore slope soil, and 2. To serve as an anti-vortex device.

Pipe railings are generally required on all drop inlets, even in rural areas, to prevent pedestrians from inadvertently falling into the culverts. In some urban areas, a grate over the drop inlet may also be needed to prevent deliberate entrance into the culvert, especially where pedestrian traffic is expected to be high or there is a large vertical drop, say greater than 6 feet.

4.5.6 Slope Tapered Inlets for RCBs

Slope tapered inlets on cast-in-place RCBs should be considered in some situations to reduce culvert costs and/or to create ponds for upstream landowners. The barrel size shall not be less than 50% of the inlet size. Also, to make construction simpler, the inlet dimensions shall be tapered only in the width, not in the height, e.g., a 12' x 8' inlet may be tapered to an 8' x 8' barrel section but not to an 8' x 6'. Due to high velocities and large drop in elevation, most tapered inlet culverts will need a flume and a basin to dissipate energy.

Design guidelines for slope tapered inlets are shown in the commentary.

4.5.7 Bridge Replacements with RCBs Using Flowable Mortar

Reinforced concrete box culverts may be placed and buried under an existing bridge instead of replacing the bridge. If there is adequate height under the bridge, the space is filled first with floodable backfill and then flowable mortar [DB RDD 4317] or, if there is restricted height, the space is filled entirely with flowable mortar [DB RDD 4318].

Minimum clearance and constructability guidance provided in this section should be reviewed for both cast-in-place and precast options during concept development. The intent is to identify potential constructability concerns early in the process.

The vertical clearance between the bridge and culvert needs to be verified. The elevation of the lowest beam (or slab) on the existing structure and the top of slab elevation of the proposed culvert need to be shown on the TS&L with the following criteria:

- For slab bridges use a minimum clearance of 3 feet between the top of the culvert slab and the bottom of the bridge low slab.
- For beam bridges use a minimum clearance of 1 foot between the top of the culvert slab and the bottom of the lowest beam.

The designer shall also provide a minimum horizontal clearance of 1.5 feet between existing substructure components and the new culvert [BDM 7.2.4.10]. It should be noted that a precast multi-barrel RCB option takes up more horizontal space than CIP. The additional space for a precast multi-barrel option is needed due to adjacent box culvert walls and required minimum space between each barrel.

When a bridge will be in service during the RCB construction, the designer shall consider the anticipated excavation relative to the bottom of bridge footings. An excavation for a 1'-0" deep working blanket shall be assumed for both RCB types and an additional 6" leveling material on top of the working blanket shall be assumed for precast RCBs. The excavation width extends 2' beyond the inside face of exterior barrel walls [BDM 7.2.4.4.1]. If the bottom of bridge footing will be potentially exposed for assumed construction excavation, consult with the BSB Methods Engineer.

If any of the above guidance cannot be met, the designer will need to consider other options such as:

- Burying the flowline of an RCB to meet vertical clearance if the hydraulics meet criteria.
- Eliminating an RCB design alternative (cast-in-place or precast) if guidance cannot be met.
- Closure of the road or staged construction with removal of the bridge to allow an RCB.

The designer shall discuss these options with the Unit Leader.

If a flowable mortar option is determined to meet clearance and constructability requirements, the designer shall refer to BDM 4.2.5 for additional requirements relative to potential settlement.

4.5.8 Revetment for RCBs

The placement of revetment within a stream channel for RCB inlets and outlets on new and extended

structures has been determined by the regulatory agencies as needing stream mitigation, unless justified by Iowa DOT policy. Therefore, revetment will typically not be proposed at an RCB inlet. At an RCB outlet, revetment will be proposed only when it's placement can be justified for the design. A decision matrix to assist in evaluating the need for inlet and outlet revetment is provided in the commentary.

The following is general guidance and should be modified based on site conditions. When revetment is proposed, the preliminary designer shall determine the quantity of Class 'E' Revetment (typical 2-foot thickness), engineering fabric, and Class 10 channel excavation (for revetment core out below grading surface) and show them in the quantity table on the TS&L. A typical section will be created and the revetment station and offset limits will be defined. Class "C" Revetment (typical 3-foot thickness) shall be considered for outlet velocities exceeding 10 ft/sec. Revetment quantity bid items for RCB projects will be included in the road sheets regardless of whether it is a Design or Bridge let project. Accordingly, the MicroStation cell for the revetment quantity table on the TS&L includes the notes "Excavation quantity calculated from grading surface. Excavation quantity is for embedded revetment and core out only and does not include excavation to the grading surface. Excavation quantity to the grading surface is determined by Road Design and included in the Road Plans. Quantities shown for information only. See Road Sheets."

For cast-in-place RCBs, (when revetment is proposed) revetment shall be placed to a width of three feet along the sides of the parallel outlet wing walls up to the face of the parapet as shown in the LRFD Cast-in-Place Culvert Standard SS 1092. Standard SS 1092 is only applicable when revetment is indicated on the box culvert TSL, and only at the end where revetment is shown. The SS 1092 details will be modified to reflect the multi-barrel situation in final design.

For single and multi-barrel precast box culverts, (when revetment is proposed) revetment shall be placed to a width of three feet along the sides of the parallel outlet wing walls up to the face of the parapet and extend across the top of the parapet as shown in the LRFD Precast Culvert Standard PEP 12-20. Standard PEP 12-20 is only applicable when revetment is indicated on the box culvert TSL, and only at the end where the revetment is shown.

For multi-barrel cast-in-place RCBs with flared headwalls, no revetment is required along the flared wing headwall.

When outlet revetment is proposed, it should be extended in the direction of flow normal to the headwall a minimum distance of 10' as measured from the outermost tip of the headwall wing. If no additional ROW is being acquired, revetment should stay within existing ROW. Additional revetment may be needed to tie into the existing stream channel.

4.5.9 Grading control points

If channel shaping or special grading is required, the designer shall collaborate with Road Design and provide grading intent or grading control information on the TSL or Site Plan Sheet. The grading intent may be supplemented with stations, offsets and elevations labeled as "G" points. The purpose of the grading control is to communicate channel or special grading needs to Design, which will assist them in the preparation of the grading plans.

Generally, channel grading control would be shown in one of two ways:

- By centerline stream – provide the alignment, profile, typical cross section and begin/end locations
- By toe of channel – provide a series of grading control points along each side of channel at the toe of slope

{An example showing grading control points on a culvert TS&L will be added in the future}

4.5.10 Stock Passes

The Design Bureau will no longer use [DB RDD 510-4] for new stock passes. Instead, designers should use a 6’ X 7’ precast box culvert. Refer to PRCB 6-20 of the Bridges and Structures Bureau Culvert Standards. Minimal fill height is 2’ and maximum is 25’ with exceptions of 40’ with approval of the Bridges and Structures Bureau. With projects involving several Design RCBs, a cast in place may be preferred.

The [DB RDD 510-4] should be used for stock pass extensions only.

When stock passes can be abandoned, a 24” concrete pipe may be placed in the stock pass and filled with flowable mortar and abandoned. However, sometimes a considerable amount of drainage flows through the stock pass and the appropriate culvert size needs to be designed.

4.5.11 Costs

Table 4.5.11 Preliminary Costs for Typical Iowa Culvert Construction

Cost Item	Unit Cost (1), (2)
Staged culverts	Add 10%
RCB Culvert (CIP), in close proximity or corridor projects	$1150/yd^3 (4)
RCB Culvert (CIP), individual projects or extensions	$1200/yd^3 (4)
RCB Removal	$80/cy
Revetment	$65/Ton (5)
Flowable mortar to plug/abandon culverts	$290/yd^3
Mobilization	10%
Contingency	B0 = 20% (3) D0, B1, D2 = 15% B2 = 15% Prelim. designs B2 = 0% Final designs(6)

Table notes:

(1) Unit costs for new construction do not include mobilization, removal of an existing structure, extensive river or stream channel work, large quantities of riprap, clearing and grubbing, approach slabs, and other construction work not part of the culvert.

(2) Unit costs were current as of January 2025. Add 4% to the base unit cost for each calendar year beyond January 2026.

(3) See abbreviations [BDM 4.1.4] for definitions of these event codes. Utilize BRG-15002 (LS) to represent contingency cost for preliminary design estimates.

(4) Unit cost includes concrete, reinforcing bars, minor grading and construction. Use the same cost for precast boxes.

(5) Include revetment costs with RCB culvert estimates. After the B1 completion, revetment costs for RCB culverts are included with the roadway estimate.

(6) Final plans delivered to the Design Bureau that do not require structural design, complete with final notes, bid items, and quantities (example: a stream revetment repair plan).

4.5.12 Alternative Structure Type

{Text for this article will be added in the future}

4.5.13 Staging

When an RCB is proposed to be constructed in stages, the preliminary designer should consider the following items:

- The staged culvert joint line should be normal to the culvert centerline. This is desired even if the culvert is on a skew to the roadway.
- The designer should establish the staged barrel lay lengths in whole foot increments from centerline, as measured from the back of parapet for cast in place culverts and the back of end section for precast culverts. Note that the variable dimension “G” from precast culvert parapet to back of end section can be obtained from the precast culvert standard sheets and resulting back to back of parapet length may not be a whole foot increment.
- The staging joint line shall be at the same location for both precast and cast in place alternates.

The following guidance is provided for temporary fill slopes (duration up to 2 years):

- For temporary embankment slopes that are 2:1, an RSS may not be needed for heights up to 15 feet.
- For temporary embankment slopes that are 2.5:1, an RSS may not be needed for heights up to 25 feet.

- If the temporary embankment slope for Stage 1 construction is steeper than 2:1, then an RSS will be required for any height.

For situations where sloping the staged fill may not be cost effective or practical, soil retainment may be considered. A method of retainment, such a sheet pile, may be considered adjacent to a box culvert. Above the culvert, vertical retainment with geotextile reinforcement may be considered for heights up to 6 feet. (See commentary for more information.) For higher fill heights or unique situations, contact Iowa DOT Soils Design Unit.

4.5.14 Multi-Barrel RCB Culvert Sedimentation Mitigation

There are many parameters that impact the potential for sedimentation in a multi-barrel box culvert. The Iowa DOT has developed a program called Iowa DOT Culverts that assesses the parameters of a project site for the potential of sedimentation to occur in a multi-barrel culvert location. The application is available at the following link:

https://apps.iowadot.gov/culverts/

Sedimentation for multi-barrel culverts with flared headwalls may be mitigated by using a “self-cleaning” culvert concept. The solution does not affect current culvert design protocols, but provides a grading plan to enhance flow and sediment transport. For more information, refer to the State Transportation Innovative Councils (STIC) Incentive Funds Final Report ST-001. The report and an Iowa DOT example plan are available upon request. Additional information is available under the Iowa Highway Research Board Projects TR-545 and (TR-545 Tech Brief); TR-619 and (TR-619 Tech Brief); and TR-719 and (TR-719 Tech Brief).

4.5.15 Fish Passable Box Culverts for Regulatory Compliance

The Location and Environment Bureau (LEB) will identify streams at box culvert locations that are classified as Waters of the United States (WOTUS) and require fish passage at the W00 (Preliminary Wetland Review) event. When a box culvert location is identified as WOTUS and requires fish passage, any new or replacement culvert (typically 6’ x 6’ or greater) must be buried at least 12 inches below the natural streambed. When a box culvert is buried one foot below the streambed, the culvert height must be increased by at least one foot to provide sufficient hydraulic capacity (e.g., a 10’ x 10’ RCB buried one foot is hydraulically equivalent to a 10’ x 9’ RCB culvert).

For locations not identified as WOTUS or not requiring fish passage, the box culvert may be designed to match the natural streambed or as determined by the designer. For box culvert extensions, fish passable mitigation will not be required for the design of the extension.

When justified, revetment for buried RCB culverts shall match the design streambed [see BDM 3.2.2.10]. The Bridges and Structures Bureau will calculate the revetment quantities for box culverts.

4.5.16 Pedestrian or Shared Use Path RCB

In most cases, a standard sized 12-foot x 11’-4 reinforced concrete box (RCB) structure is desired. The RCB size may be larger based on site conditions. For additional guidance, see DB DM 12-B-2 C5b. Pedestrian Tunnel Standards are available on the Iowa DOT BSB web site. Available sizes are summarized in the tables below:

REINFORCED CONCRETE PEDESTRIAN TUNNEL STANDARDS (span x height):

12’ X 11’-4	12’ X 12’-4
	14’ X 12’-4

PRECAST PEDESTRIAN TUNNEL STANDARDS (span x height):

12' X 10'-10	12' X 11'-10
	14' X 11'-10

Fill range for standard Pedestrian Tunnel Standards is 0 to 15 feet (cast in place and precast). For fill heights greater than 15 feet, place a note on the TSL identifying the structure as a non-standard design. Design fill height is defined as the maximum depth of fill measured from the top of pavement to the top of the Culvert.

The standards for both cast in place and precast include zero-degree skew, flared cast-in-place headwalls with safety rail. Special headwall design will be required for non-zero degree skew situations. For skewed barrel alignment locations, consult with the BSB aesthetics coordinator. For aesthetic reasons, use of a headwall with a custom skew may be preferred for high-visibility locations or where the tunnel serves as a major trail connection. For locations where a custom skew headwall is not requested, BSB recommends utilizing the pedestrian tunnel standard if the alignment is skewed up to 7.5 degrees; or the closest, flared cast-in-place (CIP) standard box culvert headwall for higher skews (15, 30, 45-degree available). For the higher skews, there may be final design efficiency with use of a standard flared CIP headwall with the frost trough omitted. For barrel alignment skew different than the headwall skew, additional barrel length is needed to account for the corner closer to the roadway.

Plan development guidelines specific to a pedestrian or shared use path RCB are shown below. Refer to BDM 4.5.2 for additional information:

- The CIP and precast option TS&L will be completed in preliminary design for cases where the zero-degree, standard pedestrian CIP tunnel headwall can be used.
- The precast option with standard tunnel CIP headwalls results in the identical calculated back-to-back parapet length to the CIP option. The standard length of 4'-6" should be used for the cast-in-place end section barrel length to connect the headwall to the precast barrel (refer to the signed Precast Reinforced Concrete Pedestrian Tunnel Standards). The resulting precast box sections length, rounded up to a whole foot increment, will be the back-to-back parapet length minus the 4'-6" dimension on each end.
- For cases with skewed headwalls (either custom or standard skew), Preliminary Design will only prepare the TS&L for the CIP option. Final Design will assess the need for precast alternatives and prepare accordingly.

The standard frost trough on the floor of the pedestrian tunnel RCBs has been omitted. A minimum 0.5% longitudinal slope on pedestrian or shared use path culvert structure shall be used to maintain positive drainage and minimize ponding. This slope shall carry through the entire length of culvert, including both headwalls.

It is preferred that a flared-wing headwall be utilized for a path or trail. All pedestrian or shared use path culverts should have a fence or safety rail around the headwall to provide fall protection. The designer shall typically show the standard safety rail along wing headwall and parapet. Aesthetic considerations may lead to a different fall protection type or detail in final design.

A precast option with flared, cast in place headwalls shall normally be offered. The 12-foot x 10'-10 size will be adequate in most cases, which provides a minimal vertical clearance of 10 feet to account for lighting fixtures and an overlay. The 1' x 1' haunch on the box floor is omitted in the standard design. Because floor joints between precast box culvert sections are likely to exceed ½ inch in the direction of travel, the precast culvert floor standard includes a 2-inch, unreinforced PC overlay to create a smooth surface. ~~The precast option TS&L will be completed in final design.~~

Depending on the length of the structure required, the location, and concerns about pedestrian safety,

tunnel-type lighting may be appropriate. If a local municipality is involved this subject should be discussed during project concept/field exam stages and the information briefly noted on the TS&L.

4.6 Permits and Approvals

Iowa Department of Natural Resources must approve new culverts if the drainage area is greater than two square miles in an urban (incorporated) area or 100 square miles in a rural (unincorporated) area. If the project is on a stream with a drainage area below DNR's thresholds and the community (city or county) is participating in the National Flood Insurance Program (NFIP), a hydraulic review and Record of Coordination with the community are necessary to ensure compliance with the NFIP. See BDM 3.2.10 for additional information.

A Corps of Engineers 404 Permit may be necessary for most stream crossings and road work if a channel change or wetland is involved. IDOT's Location and Environment Bureau coordinates this effort.

Design approval from a Drainage District is required when a culvert (or bridge) is constructed over a Drainage District channel. Statewide Drainage District information is available at either of the links below to determine whether an Iowa DOT project crosses a Drainage District channel.

> Iowa DOT Web App Viewer (includes the statewide Drainage District shape file from the Iowa DNR website, June 2021):
> https://iowadot.maps.arcgis.com/apps/webappviewer/index.html?id=ad99c079f70044a09091c6d59ed5ea8b
>
> or Iowa DNR website (statewide Drainage District shape file for downloading):
> https://www.arcgis.com/home/item.html?id=fd42f39703d84dffb73c99dfcfc70c85

Iowa DOT District staff should be able to verify when the coordination will be required. Coordination should be initiated during the concept development The preliminary designer should request the required channel design flowline (may be buried to allow future clean out), cross section, and slopes, etc. The Iowa DOT District staff will generally be the contact for all communications with the Drainage District representatives. When applicable, the need for Drainage District coordination shall be identified on the Bridge Bureau Attachment for Concept Statement.

4.7 Submittals

Project Wise folder structure and CADD/pdf file submittals shall follow the policy guidelines and checklists available on the website:

> Connect Applications (MicroStation Connect Projects)
> Preliminary Bridge Plan and Model Deliverables for B02

TABLE OF CONTENTS ~

COMMENTARY ON PRELIMINARY DESIGN OF CULVERTS

C4 Preliminary Design of Culverts
- C4.1 General
  - C4.1.1 Policy overview
  - C4.1.2 Design information
  - C4.1.3 Definitions
  - C4.1.4 Abbreviations and notation
  - C4.1.5 References
    - C4.1.5.1 Direct
    - C4.1.5.2 Indirect
- C4.2 General Culvert Design
  - C4.2.1 Hydrology
  - C4.2.2 Hydraulics
    - C4.2.2.1 Riverine Infrastructure Database
  - C4.2.3 Culverts in Series
  - C4.2.4 Bedding and Backfill
  - C4.2.5 Settlement and Camber
  - C4.2.6 Minimum Allowable Cover
  - C4.2.7 High Fill Pipes
  - C4.2.8 OD Standard Road Plans and Road Design Details
  - C4.2.9 Stream Stability
- C4.3 Culvert Plan Preparation
  - C4.3.1 Culvert Database (old Pink Sheets)
  - C4.3.2 Pipe Sizes
  - C4.3.3 Culvert Type
  - C4.3.4 Horizontal Alignment
  - C4.3.5 Vertical Alignment
  - C4.3.6 Length Determination
  - C4.3.7 Culvert Tabulation Sheets
- C4.4 Pipe Culverts
  - C4.4.1 Extensions
  - C4.4.2 Median Pipes
  - C4.4.3 Cross Road Culvert Letdowns
  - C4.4.4 Ditch Letdowns
  - C4.4.5 Culvert Liners
  - C4.4.6 Culvert Maintenance
  - C4.4.7 Uplift of Culvert Inlets
  - C4.4.8 Trenchless Construction
  - C4.4.9 Slope Tapered Inlet for Pipes
  - C4.4.10 Revetment for Pipes
  - C4.4.11 Fish Passable Pipe Culverts for Regulatory Compliance
  - C4.4.12 Temporary Run Around (on-site detour)
  - C4.4.13 Flap Gates for Pipes
- C4.5 Reinforced Concrete Boxes (RCBs) and Designs
  - C4.5.1 Cast-in-Place RCBs
    - C4.5.1.1 Cast-in-Place RCB Headwalls
  - C4.5.2 Precast RCBs
  - C4.5.3 RCB Extensions
  - C4.5.4 Flumes and Scour Floors
  - C4.5.5 Drop Inlets
  - C4.5.6 Revetment for RCBs

C4.5.7 Grading Control Points
C4.5.8 Stock Passes
C4.5.9 Costs
C4.5.10 Alternative Structure Type
C4.5.11 Staging
C4.5.12 Multi-Barrel RCB Culvert Sedimentation Mitigation
C4.5.13 Fish Passable Box Culverts for Regulatory Compliance
C4.5.14 Pedestrian or Shared Use Path RCB
C4.6 Permits and Approvals
C4.7 Submittals

C4 Preliminary Design of Culverts

C4.1 General

C4.1.1 Policy overview

C4.1.2 Design information

C4.1.3 Definitions

C4.1.4 Abbreviations and notation

C4.1.5 References

C4.1.5.1 Direct

C4.1.5.2 Indirect

C4.2 General Culvert Design

C4.2.1 Hydrology

Iowa Runoff Chart

In the 1950s, the Iowa State Highway Commission (now Iowa DOT) adapted Bureau of Public Roads' Chart 1021.1, "Highway Drainage Manual", 1950. (BPR's chart was adapted from original work performed by W.D. Potter, "Surface Runoff from Small Agricultural Watersheds," Research Report No. 11-B, (Illinois) Highway Research Board, 1950). The Iowa Runoff Chart has been widely used by IDOT and the counties since then.

The chart is self-explanatory. However, its use does require the exercise of judgment in selecting the land use and land slope factors. It can be used for rural watersheds draining up to 1280 acres. The Iowa DOT Culvert program utilizes the Iowa Runoff Chart for calculating peak discharges when the drainage area is two square miles (1280 acres) or less.

The following is intended to aid that judgment:

1. Very Hilly Land---is best typified by the bluffs bordering the Mississippi and the Missouri Rivers. This terrain is practically mountainous (for Iowa) in character. Small areas of very hilly land can be found in all parts of the state. Typically, they can be found near the edge of the flood plains of the major rivers.
2. Hilly Land---is best typified by the rolling hills of south central Iowa. Interstate 35 in Clarke and Warren Counties traverses many hilly watersheds. Small areas of hilly land can be found in all parts of the state.
3. Rolling Land---is best typified by the more gently rolling farm lands of central Iowa. Interstate 80 in Cass and Adair Counties traverses many rolling watersheds. Small areas of rolling land can be found in all parts of the state.
4. Flat Land---is best typified by the farm lands of the north central part of the state. U.S. 69 traverses many flat watersheds in Hamilton and Wright Counties. Small areas of flat land can be found in all areas of the state.
5. Very Flat Land---is best typified by the Missouri River flood plain. Interstate 29 is located on this type of land for most of its length. Much of Dickinson, Emmet, Kossuth, Winnebago and Palo Alto Counties are also in this classification. Small areas of very flat land can be found in all parts of the state.

Use the Iowa Runoff Chart only for rural watersheds and the limitations of drainage areas listed below. This equation was developed by finding the best statistical fit to the curve on the Runoff Chart.

For drainage areas, $2 < A < 1280$ acres

$Q_{design} = LF \times FF \times Q$ where $Q = 8.124\ A^{0.739}$

Q is in ft^3/sec

A is in acres

Frequency Factor (FF)

Frequency, years	5	10	25	50	100
Factor, FF	0.5	0.7	0.8	1.0	1.2

Land Use and Slope Description (LF)

Land Use	Slope Description				
	Very Hilly	Hilly	Rolling	Flat	Very Flat (no ponds)
Mixed Cover	1.0	0.8	0.6	0.4	0.2
Permanent Pasture	0.6	0.5	0.4	0.2	0.1
Permanent Woods	0.3	0.25	0.2	0.1	0.05

C4.2.2 Hydraulics

C4.2.2.1 Riverine Infrastructure Database

C4.2.3 Culverts in Series

C4.2.4 Bedding and Backfill

C4.2.5 Settlement and Camber

C4.2.6 Minimum Allowable Cover

C4.2.7 High Fill Pipes

C4.2.8 OD Standard Road Plans and Road Design Details

Guidelines for Using the Standard Road Plans and Road Design Details.

The following guidelines should be considered when designing pipe culverts. Pay careful attention to the graphical representation and notes listed in the Standard Road Plans and Road Design Details. A common mistake made when designing culverts is not listing all dimensions in the Remarks space on pink sheets. Also, items such as the angle of bends or DR-121 connected pipe joints are often forgotten and not placed in the Remarks on the pink sheet. These items plus many others on the pink sheet, which are used for site specific information, are necessary to properly complete the culvert tabulation 104-3 in the road plans. Discussion is also provided for Road Design Details 4309 and 4311 for fore slope shaping at culverts.

If the slope of a DR-601 or DR-651 would be steeper than approximately 5%, pipe letdowns are required. If the fall across the roadway is greater than approximately 8 feet or if the fill above the elbow for a DR-611, DR-632 or DR-652 is greater than approximately 10 feet, consider using DR-625, DR-629, DR-632, DR-641 or DR-653 for ease of construction. The gradient of the pipe beyond bend should be less than 1%.

For pipe letdowns (DR-625, DR-629, DR-632, DR-641 and DR-653) with double elbows, the Length “B” portion for letdowns should be approximately parallel to the fore slope. The desirable cover above “B” is equal to the diameter of the pipe. This helps resist uplift forces. The minimum "C" length is 2 feet and the connection between the concrete and corrugated pipes should extend beyond proposed shoulder line. The flowline at this point should be approximately 6ft below shoulder elevation. On the pink sheet, specify concrete pipe in the space (Pipe _____ + _____Aprons). Specify CMP or PEP or UNCL in the space (Flume _____), but revise this space as (CMP or PEP or UNCL _____+ _____Apron). Specify quantity of elbows, degree of elbows (to the nearest degree), and culvert type in the Remarks on the pink sheet.

Concrete pipe class 2000D will be the minimum strength under paved roads. The strength of pipe will be determined per SRP DR-104, “Depth of Cover Tables for Concrete and Corrugated Pipe”.

For all non-NHS highways with traffic counts less than or equal to 3000 VPD, unclassified pipes should be used.

All pink sheet remarks shall be conveyed to the culvert tabulation comments on 104-3, except in those instances where the quantity information is included in a tabulated column.

DR-104 Depth of Cover Tables for Concrete and Corrugated Pipe.
When bidding unclassified pipe, specify pipe class for RCP since that is an option.

DR-121 Connected Pipe Joints.
Specify the type in the Remarks column on the pink sheet. All RCP pipe sections, excluding trenchless installations, will have these connectors.

DR-122 Type “C” Connectors.
When extending a pipe with a pipe and the slope of the extension is different from the slope of existing pipe, a type C-1 connection will be required.
When extending an existing RCB with a pipe, normally remove the headwall to the front face of the parapet and UAC the parapet, and use a C-2 collar. If the parapet is skewed to the barrel, Type “D” pipe sections (DR-141) may be specified to match the skewed headwall or in rare occasions the RCB may be cut 90 degrees to the barrel behind the parapet. Keep in mind to try to line up the inlet and especially the outlet to the draw. Specify type and quantity in the Remarks on the pink sheet.

DR-141 Pipe Bends (Elbows and D Sections).
See the notes on DR-141 for the limitations and construction of bends for “D” sections and elbows. For “D” Sections greater than 10 degrees consider using elbows. A standard Type “D” section is 7.5 degrees.

DR-142 Culvert Pipe Tee Sections.
Specify quantity, culvert type, size and angle in the Remarks on the pink sheet. The concrete pipe cap is useful when staging construction to keep siltation out of the pipe.

DR-205 Concrete Apron With End Wall and DR-206 Low Clearance Concrete Pipe Apron With End Wall.
May be used when inlet elevation must be lowered due to limited fill height. Specify Top Elevation in the Remarks on the pink sheet.

DR-212 Beveled Pipe and Guard.
When designing a median ditch near a crossover, it is preferred to outlet the median drainage to an outside, upstream ditch except when outletting along the flood plain of a stream. In those instances, the median pipe should drain to the downstream side of the stream. However, when entrances on both sides of the crossover restrict the outlet of the median pipe, DR-212 will allow the drainage to continue down the median.

DR-213 Pipe Apron Guards.

The guard is to be used where the concrete inlet apron opening is within the Clear Zone. Due to possible clogging, try to avoid guards at the outlet apron. Specify quantity in the Remarks on the pink sheet.

DR-501 Corrugated Metal Type “A” Diaphragm.

Specify quantity in the Remarks on the pink sheet.

EC-301 Rock Erosion Control (REC).

Splash basins will be placed at the outlet of all cross road pipes including extensions to mitigate erosion. Median pipes will be assessed as to the need for splash basins based on the ditch grade.

SW-562 Standard Road Plan Vertical Throat Area Intake.

This intake has large openings allowing for minimal head water and is acceptable in the clear zone. This standard intake is the most hydraulically efficient for conveying flows.

DR-601 Reinforced Concrete Pipe Culvert.
This is used for concrete pipes under pavements. For non-NHS routes and where the ADT is less than or equal to 3000 VPD, DR-651 should be used for culverts under the highway. DR-651 for Unclassified Pipe Culvert should be used for all entrances and driveways and for unpaved side roads if it is not replacing an existing concrete pipe. Unless noted all pipes will have aprons.

DR-602 Reinforced Concrete Pipe Culvert with Tees.
Teed pipes are generally not recommended except in a side ditch outside the clear zone. See DR-142 for description of tee. Specify the tee G dimensions, quantity, size and angle in the Remarks on the pink sheet. See DR-612 for location of tee aprons.

DR-611 Reinforced Concrete Pipe Culvert Letdown Structure.
See DR-631 for a similar culvert as a side ditch letdown and DR-652 for an unclassified letdown. Specify length "F", desired elbow type (D Section or Elbow), elbow angles and quantity in the Remarks on the pink sheet.

DR-612 Apron Tee Inlet.
This is generally used in conjunction with DR-602. To be used as the inlet to a crossroad pipe when all the flow is coming down a steep side ditch (slope greater than approximately 4%). This inlet will prevent the side ditch water from bypassing the inlet and overtopping the adjacent ditch block and will allow the side ditch water to "turn the corner" within the pipe. Specify the pipe cap, if needed DR-142 in the Remarks on the pink sheet.

DR-613 Concrete Pipe with “D” Section
This detail is typically used for median pipes with a limited median depth, in order to provide sufficient vertical clearance to the pavement. Type “D” pipe sections (DR-141) may be specified to increase the clearance or avoid conflicts.

DR-621 Pipe Extension.
This is commonly used to extend existing structures. All existing RCB or RCP shall be extended with a concrete pipe regardless of the ADT. Specify A and B in the Remarks on the pink sheet.

DR-622 Pipe Extension Horizontal Bend One or Both Ends.
This is commonly used to extend existing structures. All existing RCB or RCP shall be extended with a concrete pipe regardless of the ADT. Skew angle of extension is different than skew of pipe. The extension skew is referenced to the existing pipe, not the centerline of road, e.g., skew is 15 degrees Rt., not 15 degrees Rt. ahead. Specify in the Remarks on the pink sheet whether skew is the pipe skew or the extension skew. If the extensions on both ends of an existing structure are skewed, specify in the Remarks how much each extension is skewed, e.g., "Right end or outlet is 15 degrees Rt., Left end or inlet is 20 degrees Rt." Specify the number of bends, culvert type, and degrees in the Remarks on the pink sheet.

DR-625 Pipe Extension Letdown Structure With Metal Apron.
Designer must select either CMP or PEP for the outlet portion of the pipe. Specify A, B, C, E, and L in the Remarks on the pink sheet.

DR-626 Pipe Extension-Adding Lanes.
See Guidelines at beginning of this section and DR-621.

DR-627 Pipe Extension Horizontal Bend-Adding Lanes.
See Guidelines at beginning of this section and DR-622.

DR-628 Pipe Extension Both Ends Horizontal Bends (Optional)-Adding Lanes.
See Guidelines at beginning of this section and DR-622.

DR-629 Pipe Extension Letdown Structure Horizontal Bend (Optional)-Adding Lanes.
See Guidelines at beginning of this section, DR-622 and DR-625.

DR-631 Corrugated Pipe Culvert Letdown Structure With Single Elbow and

DR-632 Corrugated Pipe Culvert Letdown Structure With Double Elbow.
Can be used for a side ditch letdown. Note that the Location point is at the inlet of the pipe, not at the centerline of dike or roadway.
Dike (see standard EW-110) over letdown should be Type F, with a 20-foot top width for structures 48-inch and larger. Maximum size is 60 inches to prevent uplift of the CMP inlet. For larger culverts consider using concrete pipe or box culverts. Outlet aprons are optional if outlet is next to an RCB. Minimum cover over length "C" is 1 ft. Specify A, B, C, L, and quantity of diaphragms in the Remarks on the pink sheet.

DR-641 Concrete/Corrugated Pipe Culvert letdown Structure With Metal Apron.
Designer must select either CMP or PEP for the outlet portion of the pipe.

DR-642 Apron Pipe Tee Inlet.
Note that the location point is at the inlet. This culvert is generally used in a side ditch. If CMP is used, specify the quantity of type “A” diaphragms in the Remarks on the pink sheet. Teed pipes are generally not recommended except in a side ditch outside the clear zone.

DR-651 Unclassified Pipe Culvert.
Unclassified pipes are often used under unpaved side roads and entrances. This OD SRP is also used for Unclassified Roadway pipes where the ADT < 3000 VPD and the location is a non-NHS route.

DR-652 Unclassified Letdown Structure Single Elbow.
Use when an elbow under the road is needed. Unclassified pipes are often used under unpaved side roads and entrances. Type “A” diaphragms are not required when DR-652 is used under a roadway since “piping” is much less likely due to the length of pipe under fill and possible better compaction of bedding and backfill.

DR-653 Unclassified Roadway Letdown Pipe With Metal Apron.

ROAD DESIGN DETAIL 4311.
Details of Barnroof Foreslope at Drainage Structure. Typical 4311 is used for culvert spot replacements or extensions as the site grading to be shown on the plan view of the TS&L.

ROAD DESIGN DETAIL 4315 and 4316.
When possible it is preferred to remove an existing structure rather than plug and abandon.
When jacking pipes to replace existing structures, use RDD 4315 and 4316 to abandon with flowable mortar.
When using RDD 4315 and 4316 for Stock Passes that also convey drainage, it is preferred using an RCP rather than a flexible pipe to prevent the pipe floating while pouring the flowable mortar.

C4.2.9 Stream Stability

C4.3 Culvert Plan Preparation

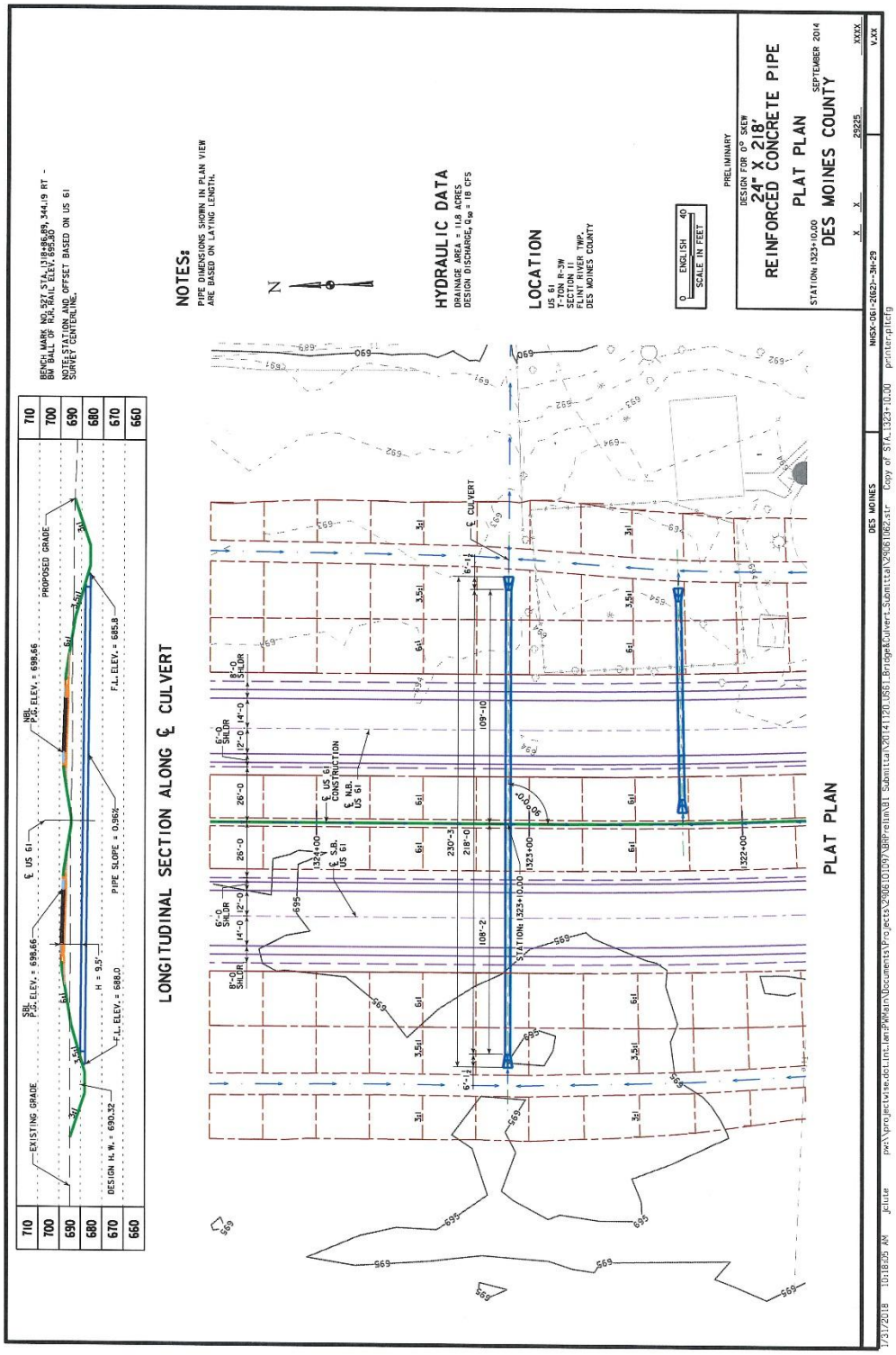
LONGITUDINAL SECTION ALONG ℄ CULVERT
PLAT PLAN
NOTES:
PIPE DIMENSIONS SHOWN IN PLAN VIEW ARE BASED ON LAYING LENGTH.
HYDRAULIC DATA
DRAINAGE AREA = 11.8 ACRES
DESIGN DISCHARGE, Q50 = 18 CFS
LOCATION
US 61
T-70N R-31W
SECTION 11
FILLMORE RIVER TWP.
DES MOINES COUNTY
PRELIMINARY
DESIGN FOR 0° SKEW
24" X 218'
REINFORCED CONCRETE PIPE
PLAT PLAN
STATION: 1323+10.00
DES MOINES COUNTY
SEPTEMBER 2014
EXISTING GRADE
PROPOSED GRADE
℄ US 61
PIPE SLOPE = 0.96%
H = 9.5'
F.L. ELEV. = 688.0
F.L. ELEV. = 685.8
DESIGN H.W. = 690.32
℄ CULVERT
STATION: 1323+10.00
℄ US 61 CONSTRUCTION
℄ N.B. US 61
℄ S.B. US 61
DES MOINES
NHSX-061-2(62)--3H-29
printer:pltcfg

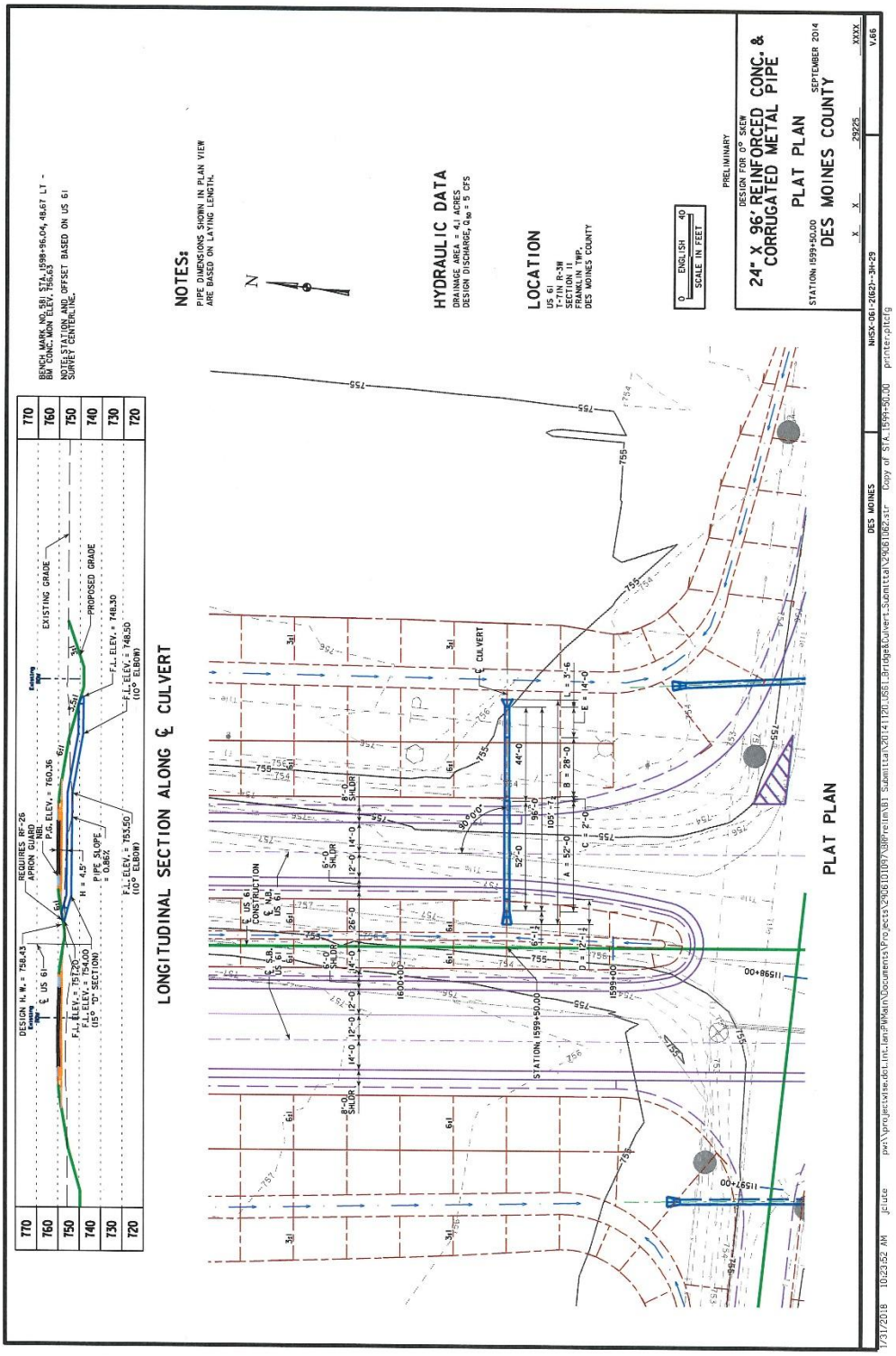
LONGITUDINAL SECTION ALONG ℄ CULVERT
PLAT PLAN
NOTES:
PIPE DIMENSIONS SHOWN IN PLAN VIEW ARE BASED ON LAYING LENGTH.
HYDRAULIC DATA
DRAINAGE AREA = 4.1 ACRES
DESIGN DISCHARGE, Q100 = 5 CFS
LOCATION
US 61
T-71N R-3W
SECTION 11
FRANKLIN TWP.
DES MOINES COUNTY
PRELIMINARY
DESIGN FOR 0° SKEW
24" X 96' REINFORCED CONC. & CORRUGATED METAL PIPE
PLAT PLAN
SEPTEMBER 2014
DES MOINES COUNTY
STATION: 1599+50.00
BENCH MARK NO. 581 STA. 1598+96.04, 49.67 LT - BM CONC. MON ELEV. 756.83
NOTE: STATION AND OFFSET BASED ON US 61 SURVEY CENTERLINE.
DESIGN H.W. = 758.43
REQUIRES RF-26 APRON GUARD NBL
F.G. ELEV. = 760.36
EXISTING GRADE
PROPOSED GRADE
PIPE SLOPE = 0.86%
F.L. ELEV. = 748.30 (10° ELBOW)
F.L. ELEV. = 753.50 (10° ELBOW)
F.L. ELEV. = 756.20 (15° "D" SECTION)
F.L. ELEV. = 754.00
℄ US 61
℄ CULVERT
STATION: 1599+50.00
DES MOINES
NHSX-061-2(62)--3H--29
V.66
printer.pltcfg

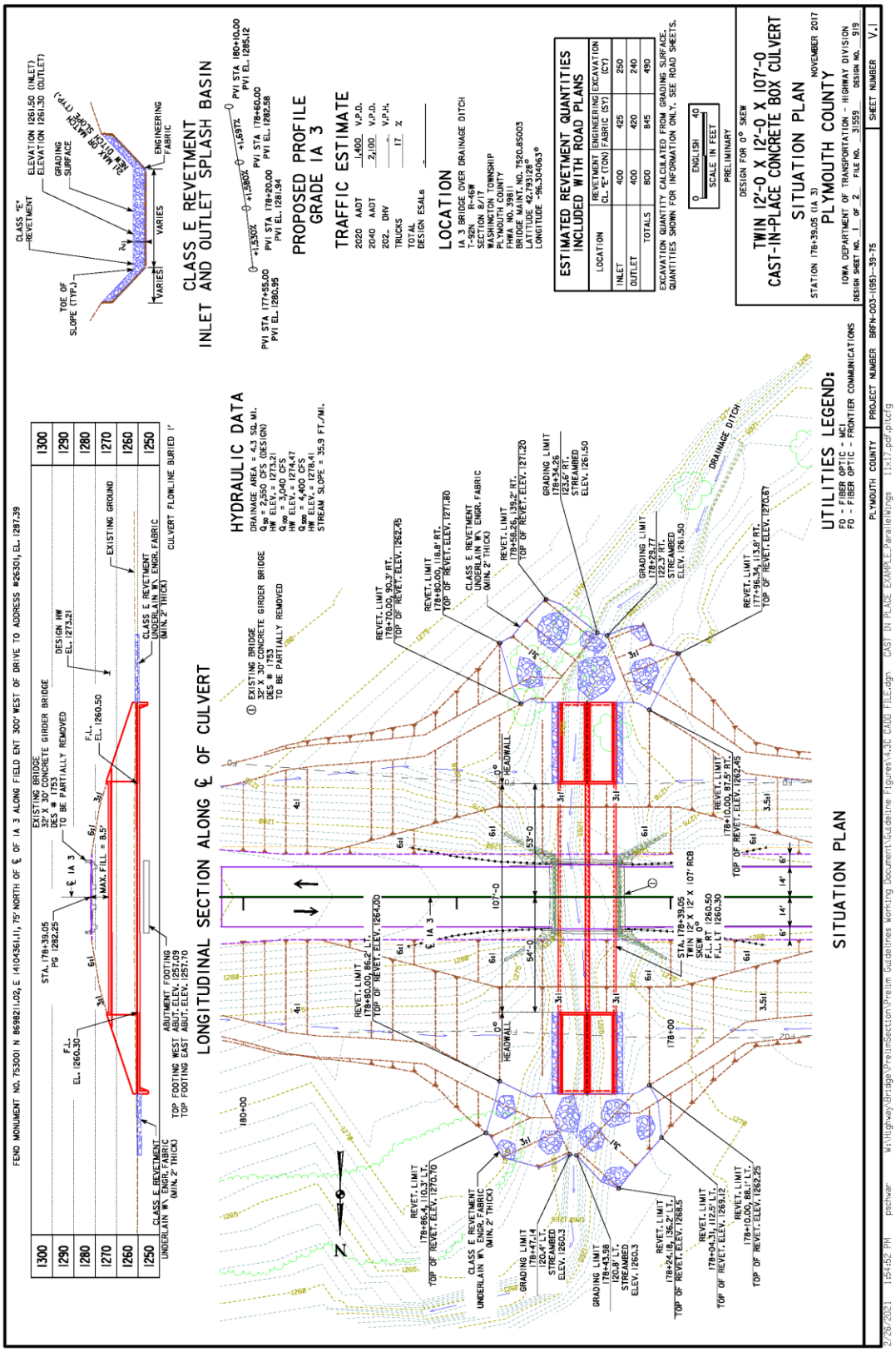
LONGITUDINAL SECTION ALONG ℄ OF CULVERT
SITUATION PLAN
HYDRAULIC DATA
DRAINAGE AREA = 4.3 SQ. MI.
Q50 = 2,500 CFS (DESIGN)
HW ELEV. = 1273.21
Q500 = 3,040 CFS
HW ELEV. = 1274.47
Q200 = 4,400 CFS
HW ELEV. = 1276.41
STREAM SLOPE = 35.9 FT./MI.
CLASS E REVETMENT
INLET AND OUTLET SPLASH BASIN
PROPOSED PROFILE
GRADE IA 3
TRAFFIC ESTIMATE
2020 AADT 1,400 V.P.D.
2040 AADT 2,100 V.P.D.
202_ DHV _____ V.P.H.
TRUCKS 17 %
TOTAL
DESIGN ESAL6 _____
LOCATION
IA 3 BRIDGE OVER DRAINAGE DITCH
T-92N
R-16W
SECTION 8/17
WASHINGTON TOWNSHIP
PLYMOUTH COUNTY
FHWA NO. 3981
BRIDGE PLANS NO. 7520.85003
LATITUDE 42.793128°
LONGITUDE -96.304063°
ESTIMATED REVETMENT QUANTITIES
INCLUDED WITH ROAD PLANS
LOCATION | REVETMENT CL. "E" (TON) | ENGINEERING FABRIC (SY) | EXCAVATION (CY)
INLET | 400 | 425 | 250
OUTLET | 400 | 420 | 240
TOTALS | 800 | 845 | 490
EXCAVATION QUANTITY CALCULATED FROM GRADING SURFACE. QUANTITIES SHOWN FOR INFORMATION ONLY. SEE ROAD SHEETS.
0 ENGLISH 40
SCALE IN FEET
PRELIMINARY
DESIGN FOR 0° SKEW
TWIN 12'-0 X 12'-0 X 107'-0
CAST-IN-PLACE CONCRETE BOX CULVERT
SITUATION PLAN
STATION 178+39.05 (IA 3)
PLYMOUTH COUNTY
NOVEMBER 2017
IOWA DEPARTMENT OF TRANSPORTATION - HIGHWAY DIVISION
DESIGN SHEET NO. 1 OF 2 FILE NO. 31559 DESIGN NO. 919
SHEET NUMBER V.1
UTILITIES LEGEND:
FO - FIBER OPTIC - MCI
FO - FIBER OPTIC - FRONTIER COMMUNICATIONS
PLYMOUTH COUNTY
PROJECT NUMBER BRFN-003-1(95)--39--75
2/26/2021 1:54:52 PM pschwar W:\Highway\Bridge\PreliminSection\Prelim Guidelines Working Document\Guideline Figures\4.2C CAD FILE.dgn CAST IN PLACE EXAMPLE.ParallelWings 11x17.pdf.pltcfg

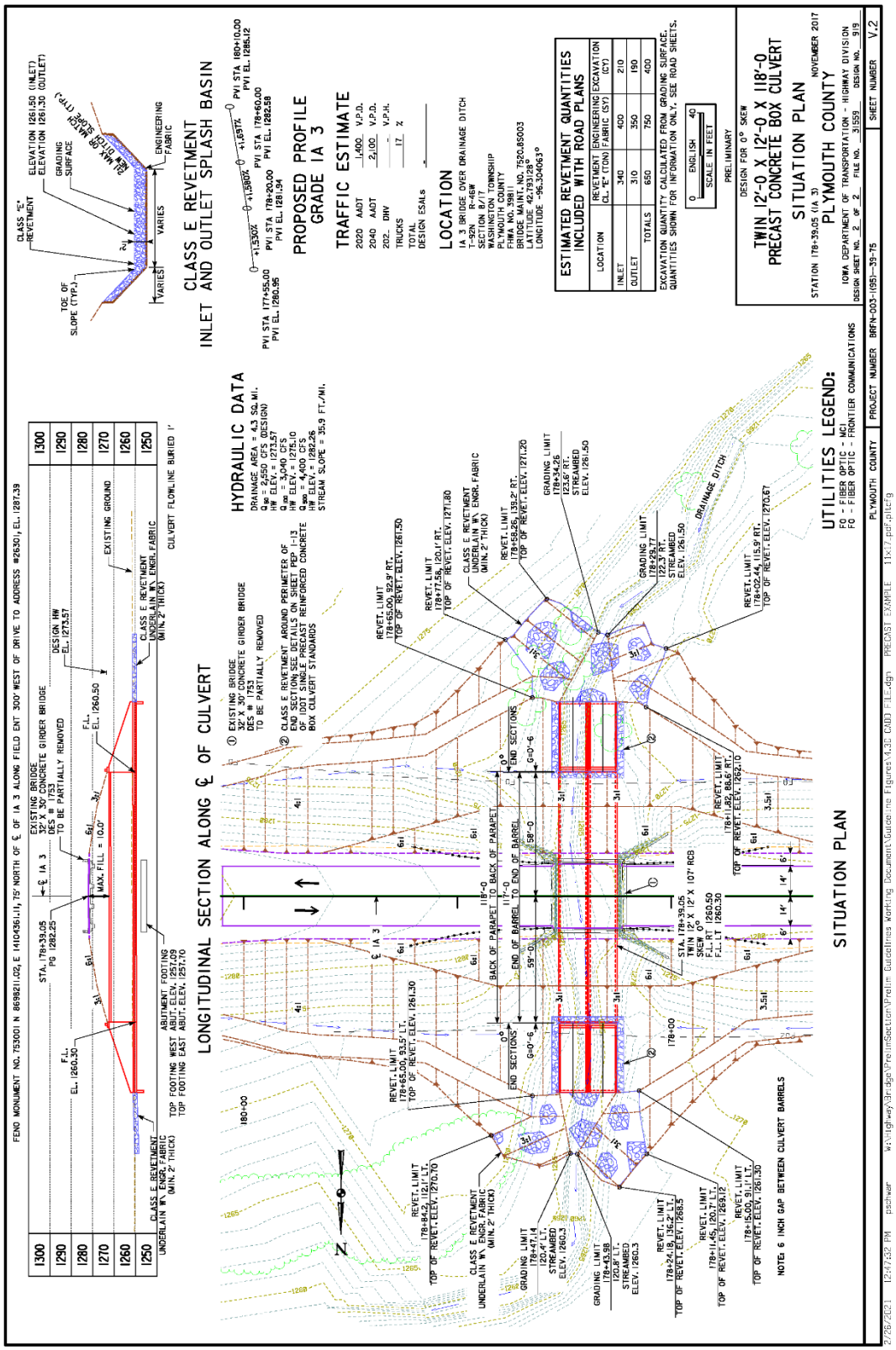
LONGITUDINAL SECTION ALONG ℄ OF CULVERT
SITUATION PLAN
CLASS E REVETMENT
INLET AND OUTLET SPLASH BASIN
HYDRAULIC DATA
PROPOSED PROFILE
GRADE IA 3
TRAFFIC ESTIMATE
LOCATION
ESTIMATED REVETMENT QUANTITIES
INCLUDED WITH ROAD PLANS
UTILITIES LEGEND:
PRELIMINARY
TWIN 12'-0 X 12'-0 X 118'-0
PRECAST CONCRETE BOX CULVERT
SITUATION PLAN
PLYMOUTH COUNTY
NOVEMBER 2017
PLYMOUTH COUNTY
PROJECT NUMBER BRFN-003-1(95)--39--75
SHEET NUMBER V.2

C4.3.1 Culvert Database (old Pink Sheets)

C4.3.2 Pipe Sizes

C4.3.3 Culvert Type

C4.3.4 Horizontal Alignment

C4.3.5 Vertical Alignment

C4.3.6 Length Determination

Determining Culvert Lengths

Required Length
The required length of a culvert is generally determined by one of two methods:
1. by the clear zone; or,
2. by fitting the culvert to the typical cross section, such as the barnroof.
Both methods must be checked and then compared; the **greater** of the two distances is the required culvert length.

The first method should generally meet the preferred clear zone table in [OD DM 8A-2]. Culvert locations where ROW, environmental or other economic impacts could occur, the clear zone may be designed to meet the acceptable clear zone with approval from the supervising Unit Leader. The Design Bureau will determine the clear zone for most projects (phases) as part of a Design Criteria table. Clear zone is measured from the edge of the driving lane to the back of the RCB parapet or the top opening of the pipe apron. (Note that the clear zone is measured from the edge of the driving lane [typically 12 feet], not from the edge of any additional pavement that will be used as part of the shoulder.) Only in rare circumstances shall any replacement or extended culvert be shorter than required by the minimum acceptable clear zone. (One exception is the inlet end of a median drain with an apron guard.)

For the second method, the culvert length is determined by fitting the culvert to the roadway barnroof section. In other words, the length is determined by intersecting the barnroof with the back of the RCB parapet or the top opening of the pipe apron.

To repeat the statement above, the **greater** of the two distances from these methods is the required culvert length.

Computations Section on Pink Sheet
The pink sheet is no longer required to determine the lengths of pipe and box culverts.

1. **Profile Grade -** Grade at a pre-determined station. Taken from the Road Plan and Profile sheet. If the structure is skewed, the Grade Rt and Lt could vary. Use the grade at the station where the parapet or top of pipe opening is perpendicular to road centerline.
2. **Vertical Drop (Subgrade or Hinge Point) -** Vertical distance down from Profile Grade to Subgrade Point to Hinge Point. For any given project, the Vertical Drop generally stays constant

except in areas with superelevations. See the following drawing that depicts the Vertical Drop and the Working Point Elevation.

3. **Working Point Elevation -** Line 1 minus Line 2.
Either the subgrade elevation or the hingepoint elevation is used as the Working Point Elevation. See the typical grading section below. Which point to use in the computation of culvert length depends on the elevation of the top of the culvert. If the top of the pipe opening (or RCB parapet) is above the hingepoint elevation, then the subgrade is used as the working point. If the top of the pipe opening (or RCB parapet) is below the hingepoint elevation, then the hingepoint is used as the working point.

<u>Subgrade Elevation</u>
Profile grade elevation
-Pavement and subbase thickness
-Subgrade cross slope times distance (typically 1% X "A")
= Subgrade elevation

<u>Hingepoint Elevation</u>
Subgrade elevation
-"BW" / 6:1 slope
= Hingepoint elevation

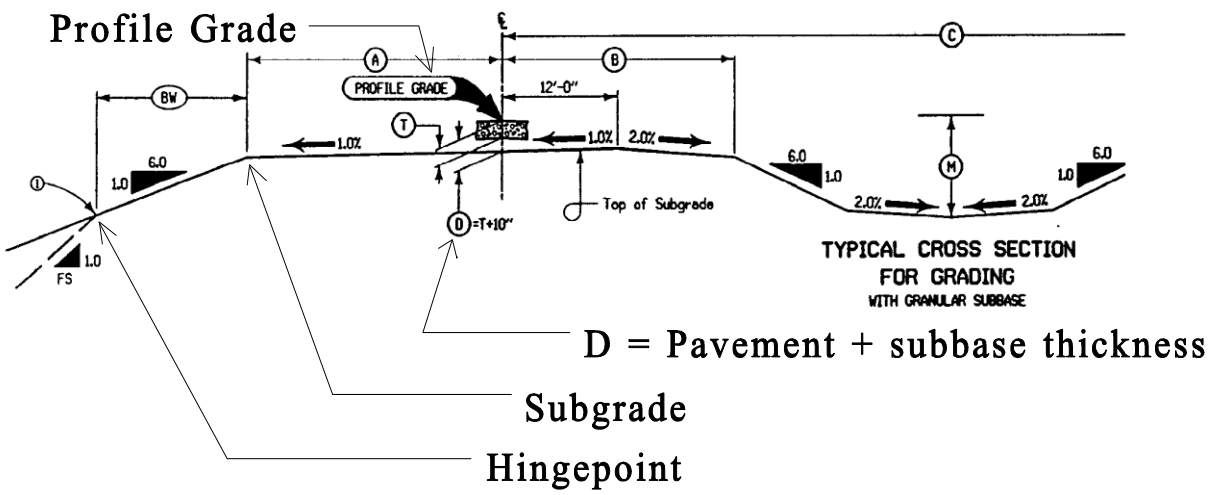

4. **Flowline -** This is the actual proposed culvert flowline elevation, not the ground elevation.

5. **Difference** - Line 3 minus line 4 = vertical difference between the Working Point Elevation and the culvert Flowline Elevation.

6. **(D+T) or (H+Hdwl)**
D + T (for pipes only) = Diameter of pipe + the thickness of pipe (see RF-1).

H + HDWL (for RCBs only) = Nominal height of the box (e.g., 8 feet) + the height of parapet (2 feet) and frost trough (4 inches).

7. **Difference -** Height Difference (line 5) minus D+T or H+HDWL (line 6). Gives the actual vertical distance between the top of structure to soil at the working point (hinge point or subgrade).

8. **Slope -** Embankment Slope from the working point (subgrade or hinge point) to the top of pipe opening or parapet. The slope is generally 6:1 when using the subgrade as the working point or 3.5:1 when using the hingepoint.

9. **Working Point (Subgrade or Hinge Point) to End of Foreslope** - Line 7 multiplied by line 8 = the horizontal distance from the working point to the top of the pipe opening (or the RCB parapet).

10. **Distance = Centerline to Working Point -** On 2-lane roadways, this is the horizontal distance from the centerline of roadway to the working point (Subgrade or Hingepoint).

    On 4-lane roadways, this is the horizontal distance from the construction centerline (typically the median) to the working point (Subgrade or Hingepoint).

11. **(1.5:1) or (Dimen. B) for pipes only -** Line 9 determines the culvert length only to the top of the pipe, so the distance from the top of the pipe to the end of the apron must be accounted for. For 1200mm or smaller pipes, use the "B" dimension of the pipe (see Road Standards); for 1350mm or greater pipes, use 1.5 x D. For box culverts, Line 11 is zero.

12. **Length -** This is the total calculated length of the culvert from the roadway centerline to either the end of the pipe or the back of RCB parapet. This is the sum of lines 9, 10 and 11. Then compare this calculated length to the minimum length to be sure it meets the minimum clear distance as follows:

    For RCBs, minimum length = Lane width + Clear zone
    For pipes, minimum length = Lane width + Clear zone + Apron "B" dimension

    Select the greater of calculated length or minimum length.

13. **Secant of Skew Angle -** If structure is skewed, list the secant of the angle the structure is to centerline of roadway.

14. **Length on Skew -** Line 12 times line 13 gives the actual length along the centerline of the culvert.

15. **Add for Hdwl Skew -** The length (line 12 or 14) of the structure is calculated along the centerline of the culvert. However, if the parapet of the headwall is not parallel to the roadway (e.g., a 0 degree skewed headwall with a 10 degree skewed barrel), then one corner of the headwall will fall closer to the roadway than the centerline of the culvert. This corner must be extended to equal the length that was calculated on the centerline (line 12 or 14). This situation will also pertain to all pipes; a length must be added to get the end of the apron beyond this point.

16. **Length -** Add "Length on Skew" (line 14) and "Add for Hdwl Skew" (line 15).

17. **Length Present Structure -** If designing an extension, determine the length of the existing structure from the road centerline to the front (not the back) of the RCB parapet or to the first pipe barrel section.

18. **Extension -** Length (line 16) minus Length Present Structure (line 17). This gives the extension length needed.

Pink Sheet----Computations Section

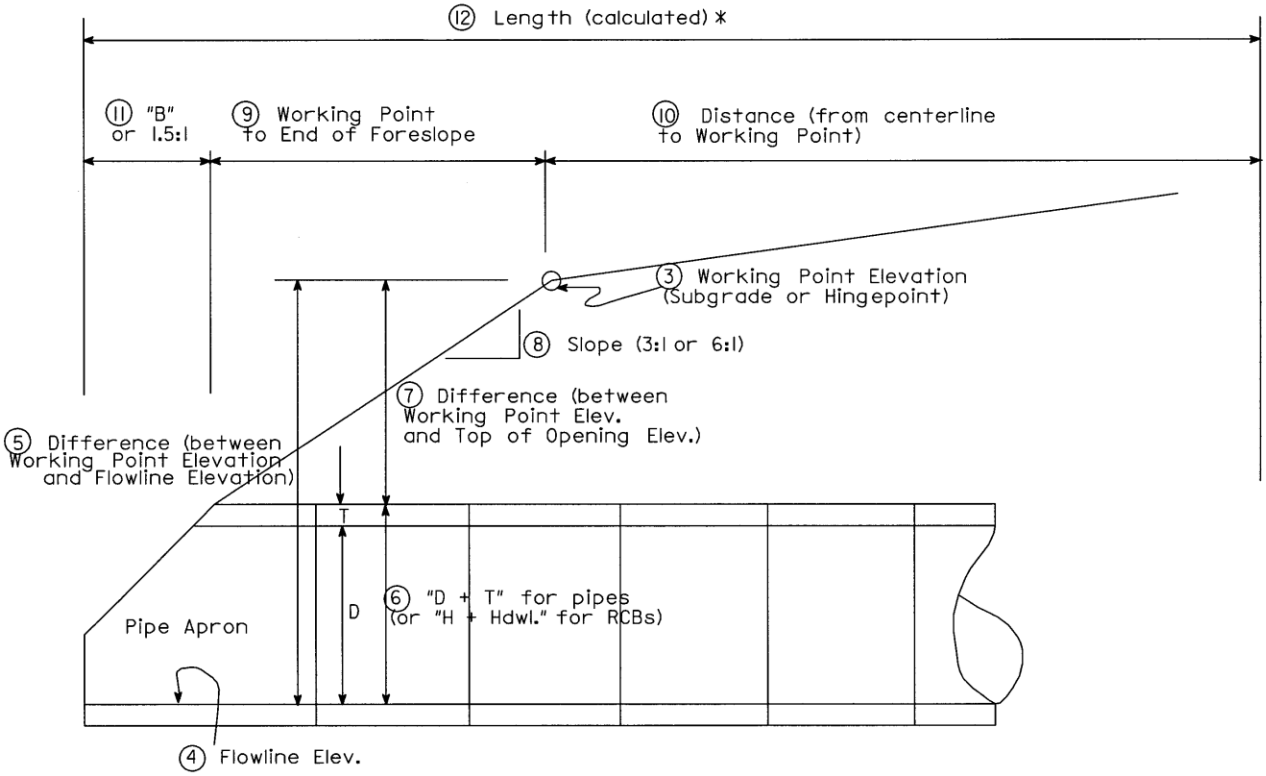

* Compare calculated length to the "clear zone" minimum length. Use the greater length.

Sample Pink Sheet

Form 621001
3-93

Iowa Department of Transportation
Highway Division
Bridge Survey Record
FIELD NOTES FOR CULVERTS

Township 72N Range 11W Section 25 Civil Township Locust Grove
Station Present Structure or Stream — Station Proposed Culvert 344 + 70
Drainage Area in Acres 6 El. Hi. Water — Character Water Shed R
Upstream Land Use Cult. Anticipate Any Change? No
Bench Mark No. —
Type and Elev. of Low Upstream Buildings —
Present Structure: Type None Design No. Br. Rdwy.
Spans Ht. Length: B. to B. Ppts. Pipe Flume
Elevation: Grade Inlet Outlet Flume Outlet
Condition Skew Angle
Proposed Culvert: Type 1501, RF-1 & CMP Fin. Rdwy. Width (Sh-Sh) 40'
Spans 24" Ht. — Length New Constr: ~~RCB~~ CMP 82' ~~Pipe~~ RF-1 60' + 1-RF-3 Aprons ~~Flume~~ 1-RF-5
Elevation: Profile Grade 731.20 F.L. Lt. 701.0 F.L. Rt. 725.4 F.L. Other 721.5, 702.1
Ext. Lt. — Rt. — Total Length Lt. 126' Rt. 46' Skew Angle 0 ~~(Lt.) (Rt.)~~ Ahead
— Contr. Dike — Sta. — El. — Type — Road Contr. Ditch outlet
Design Q 18 C.F.S. Frequency 50 Yr. Design High Water Elev. 728.1 Depth 2.7 Ft.
Design Fill Height 5 Ft. Pipe Class 2000 D. Class Bedding C — ADT = — VPD
Disposition of Present Structure —
Remarks A = 76', B = 60', C = 2', E = 20', Q = 6.5'
Two - 16° CMP elbows, One RF-2 Type C-3 adapter

Computations

	Left		Right	
1 Profile Grade Elev.	731.20		Profile Grade Elev.	731.20
2 Vert. Drop {Subgrade or Hinge Point}	- 4.7		Vert. Drop {Subgrade or Hinge Point}	- 1.9
3 Working Point Elev.	= 726.50		Working Point Elev.	= 729.3
4 Flow Line	- 701.0		Flow Line	- 725.4
5 Difference	= 25.50		Difference	= 3.9
6 (D + "T") or (H + Hdwl.)	- 2.3		(D + "T") or (H + Hdwl.)	- 2.3
7 Difference	= 23.2		Difference	= 1.6
8 Slope (6:1, 3:1, etc.)	× 3		Slope (6:1, 3:1, etc.)	× 6
9 Working Point to End of Foreslope	69.6		Working Point to End of Foreslope	9.6
10 Dist. =℄ to Working Point	+ 48.0		Dist. =℄ to Working Point	+ 28.0
11 (1½:1) or Dimen. "B"	+ 3.6		(1½:1) or Dimen. "B"	+ 3.6
12 Length, Calc. or Min (~~45.6~~ 12+30+3.6)	121.2		Length, Calc. or Min (~~45.6~~ 12+30+3.6 = 45.6)	~~41.2~~ 45.6 min.
13 Secant of Skew Angle	×		Secant of Skew Angle	×
14 Length on skew			Length on skew	
15 Add for hdwl. skew	+		Add for hdwl. skew	+
16 Length			Length	
17 Length pres. struct.	-		Length pres. struct.	-
18 Extension			Extension	

Sample Pink Sheet

Form 621001
3-93

Iowa Department of Transportation
Highway Division
Bridge Survey Record
FIELD NOTES FOR CULVERTS

Ramp "D"

Township 72N Range 11W Section 29 Civil Township Locust Grove
Station Present Structure or Stream — Station Proposed Culvert 4527 + 56.00
Drainage Area in Acres 14 El. Hi. Water — Character Water Shed F
Upstream Land Use Cultivated Anticipate Any Change? No
Bench Mark No. —
Type and Elev. of Low Upstream Buildings —
Present Structure: Type None Design No. ____ Br. Rdwy. ____
Spans ____ Ht. ____ Length: B. to B. Ppts. ____ Pipe ____ Flume ____
Elevation: Grade ____ Inlet ____ Outlet ____ Flume Outlet ____
Condition ____ Skew Angle ____
Proposed Culvert: Type 1201 RF-1 Fin. Rdwy. Width (Sh-Sh) 26'
Spans 24"Ø Ht. — Length New Constr: RCB — Pipe 94' + 2 Aprons Flume —
Elevation: Profile Grade 756.45 F.L. Lt. 748.4 F.L. Rt. 740.8 F.L. Other 741.1
Ext. Lt. — Rt. — Total Length Lt. 50' Rt. 56' Skew Angle 20° ~~(Lt.)~~ (Rt.) Ahead
Road Contr. Dike Lt. Sta. 4527+70 El. 751.3 Type M ____ Contr. Ditch ____
Design Q 23 C.F.S. Frequency 50 Yr. Design High Water Elev. 751.8 Depth 3.4 Ft.
Design Fill Height 7 Ft. Pipe Class 2000 D. Class Bedding C — ADT = — VPD
Disposition of Present Structure —
Remarks F = 30', 5° bend (RF-13)

Computations

	Left		Right	
1 Profile Grade Elev.	4527+40	756.64	Profile Grade Elev. 4527+65	756.31
2 Vert. Drop { Subgrade or Hinge Point	-	5.0	Vert. Drop { Subgrade or Hinge Point	- 5.0
3 Working Point Elev.	=	751.64	Working Point Elev.	= 751.31
4 Flow Line	-	748.4	Flow Line	- 740.8
5 Difference	=	3.24	Difference	= 10.51
6 (D + "T") or (H + Hdwl.)	-	2.3	(D + "T") or (H + Hdwl.)	- 2.3
7 Difference	=	0.94	Difference	= 8.21
8 Slope (6:1, 3:1, etc.)	×	3	Slope (6:1, 3:1, etc.)	× 3
9 Working Point to End of Foreslope		2.8	Working Point to End of Foreslope	24.6
10 Dist. =℄ to Working Point	+	40.0	Dist. =℄ to Working Point	+ 24.0
11 (1½:1) or (Dimen. "B")	+	3.6	(1½:1) or (Dimen. "B")	+ 3.6
12 Length, Calc. or Min (39.6' 16+20+3.6=)		46.4	Length, Calc. or Min (23.6' 20+3.6)	52.2
13 Secant of Skew Angle 20°	×	1.06	Secant of Skew Angle 20°	× 1.06
14 Length on skew		49.4	Length on skew	55.3
15 Add for hdwl. skew	+	—	Add for hdwl. skew	+ —
16 Length Use →		50'	Length Use →	56'
17 Length pres. struct.	-	—	Length pres. struct.	- —
18 Extension		—	Extension	—

C4.3.7Culvert Tabulation Sheets

Example Culvert Schedule

BRIDGE AND CULVERT SCHEDULE — FILE NO 32187 — DESIGNER IN CHARGE — A C M MW — RECEIVED — NO. DESIGNS

ROAD Flattery/Bell — B Z T CLEAR — TO ROAD DESIGN — NO. PIPES

PROJECT NO IM-035-4(309)95--13-77 — PIN NO 15-77-035-040-01 — DRAINAGE Claman/Diedrich — BW E X — TO FINAL DESIGN — DESIGNS

LOCATION I-35 from NE 36th St in Ankeny to N of — 1733+00.00 TO 2202+00.00 — TRAFFIC COUNT — VPD YR — SEE ROAD DESIGN TYPICAL NO. — Date

DESIGN		PRESENT STRUCTURE		PROPOSED STRUCTURE																												DIKE						
				LOCATION							APRON		ADAPTERS DR-122			ELEVATION						DIMENSIONS (E)					SKEW AHEAD (DEGREES)											
																					DR-205 INLET APRON TOP ELEV	TOTAL		TRENCH LESS TOTAL	EXTENSIONS											
NUMBER	DRAINAGE AREA	SURVEY STATION	DESCRIPTION	STATION	OFFSET	DR	SIZE	KIND	LGTH NEW CONST	DESIGN COVER (H)	IN	OUT	TYPE	NO.	FLUME DESCRIPTION	GRADE	LEFT	RIGHT	OTHER	OTHER		LEFT	RIGHT		LEFT	RIGHT	LEFT	RIGHT	CNTR	LT/RT	LOCATION STATION	TOP ELEVATIO	TOP ELE	DISPOSITION OF PRESENT	REMARKS
	Med-	2237+00.00	36" x 58' RCP	2236+11.25		DR-601	24	RCP	68	3.2	1	1				1000.41	990.19	989.33				45.29	34.95	0											Fair	Alignment is RMPRestAreaC. Remove 36" RCP at SUR Sta.2237+00.00 and replace.
	-			1733+00.00	+25	DR-613	24	RCP	92	1.02	1	1				969.91	967.56	960.97			968.33	20.92	83.38	0												DR-613 with DR-205 apron with endwall and a DR-141 type D section single bevel upstream.
	23.9-	732+92.70	36" x 181' RCB 30 LA	1732+92.72		DR-621	36	RCP	24	4.66	1		C-1	1		969.92	961.61					32		0	24		30								Good	Remove existing apron and lay 24ft and place a DR-201 ditch to inlet
	23.9-	732+92.70	36" x 181' RCB 30 LA	1732+92.72		DR-621	36	RCP	26	6.02		1	C-1	1		969.92		959.85					34	0		26	30								Good	Remove existing apron and lay 26ft and place a DR-201 ditch to outlet
	10-	726+54.80	30" x 181' RCP 34 RA	1726+54.70		DR-621	30	RCP	26	4.05	1		C-1	1		971.32	964.18					32		0	26			34							Good	Remove existing apron and lay 26ft and place a DR-201 ditch to inlet
	10-	726+54.80	30" x 181' RCP 34 RA	1726+54.70		DR-621	30	RCP	30	4.29		1	C-1	1		971.32		963.05					36	0		30		34							Good	Remove existing apron and lay 30ft and place a DR-201 ditch to outlet
	12.7-	446+05.00	24" x 144' RCP	1746+58.97		DR-621	24	RCP	56	4.69		1	C-1	1		973.82	966.22					62		0	56			2								Remove existing apron and lay 56ft and place a DR-201 ditch to outlet
	-	446+05.00	24" x 144' RCP	1746+58.97		DR-621	24	RCP	6	3.92	1		C-1	1		973.82		967.14					12	0		6		2								Remove existing apron and lay 6ft 24" RCP and place a DR-205
	4.4-	441+85.00	24" x 131' RCP	1742+81.00	+26.05	DR-601	24	RCP	86	1.84		1				972.68	971.02	967.34	968.35			23.84	68.73	0						Median	1742+50.00	971.628	M	Fair	Inlet is DR-142_SW-512 Case 2 flowline 968.353 24in RCP pipe Tee at center top flowline Elv. 971.024 +4.624 RT. RCP pipe Tee caped at one end See model or cross-section for details. Remove 24" RCP at SUR Sta. 441+85.00 and replace.
	-			1742+20.00		DR-601	24	RCP	178	2.42	1	1				972.50	967.20	967.20				95.34	94.90	0						Left	1757+50.00	973.30			
	-			1760+40.00	+41	DR-613	24	RCP	96	2.43	1	1				975.80	971.80	969.82				30.38	77.85	0						Median	1760+95.00	973.259	M		DR-613 with a DR-141 type D section single bevel upstream. Existing median drain tees into cross road pipe. Remove/Plug & Abandon existing 24in Med Drain at SUR STA 460+30.8 and replace
	-			1753+00.00	+41	DR-613	24	RCP	86	2.31	1	1				975.74	971.74	970.48				30.68	67.57	0						Median	1752+40.00	973.23	M		DR-613 with a DR-141 type D section single bevel upstream. Existing median drain tees into cross road pipe. Remove/Plug & Abandon at SUR STA 452+04.80 and replace
	27.7-	452+04.80	24" x 137' RCP	1752+40.00		DR-601	30	CMP	208	2.11	1	1				975.56	970.23	970.28				108.43	108.31	0						Right	1750+25.00	972.79	M	Fair	Pipe is a 30in 0.5 inch steel casing pipe not CMP with DR-203 aprons. Remove/Plug & Abandon existing 24in x 137' RCP Sur Sta 452+04.8 Jack New 30in 0.5 inch steel casing pipe
	-			1775+16.00	+41	DR-613	24	RCP	140	2.72	1	1				968.32	964.32	959.53				30.95	121.30	0											DR-613 with a DR-141 type D section single bevel upstream. Existing median drain tees into cross road pipe. Remove/Plug & Abandon.
	-			1774+21.00	+41	DR-613	24	RCP	140	2.69	1	1				968.19	964.19	959.55				30.40	121.86	0						Median	1774+70.00	965.59	M		DR-613 with a DR-141 type D section single bevel upstream. Existing median drain tees into cross road pipe. Remove/Plug & Abandon.
	36.4-	460+30.80	30" x 133' RCP	1760+95.00		DR-601	30	CMP	216	2.16	1	1				975.47	970.17	969.77				108.89	115.85	0						Left	1762+50.00	972.28	M		Pipe is not CMP but a 30in 0.5 inch steel casing pipe. Remove/Plug & Abandon existing 30 in x 133' RCP at SUR Sta. 460+30.80 Jack New 30in 0.5 inch steel casing pipe with DR-203 aprons.
	28.5-	510+04.40	36" x 136' RCP	1810+95.00		DR-601	36	CMP	254	1.9	1	1				977.08	970.29	971.42				149.65	114.53	0										Fair	Pipe is not CMP but a 36in 0.5 inch steel casing pipe. Remove/Plug & Abandon existing 36 in x 136' RCP at Sur Sta. 510+04.40 Jack New 36in 0.5 inch steel casing pipe
	-			1810+16.99	+41	DR-613	24	RCP	94	2.38	1	1				977.21	973.21	971.55				30.75	75.48	0						Left	1817+00.00	978.28	M		DR-613 with a DR-141 type D section single bevel upstream. Existing median drain tees into cross road pipe. Remove/Plug & Abandon.
	Med-	486+04.11	24" x 55' RCP	1786+68.00	+41	DR-	24	RCP	86	2.31	1	1				973.98	969.98	968.69				30.26	67.98	0						Median	1786+50.0	971.62	M	Fair	DR-613 wit a DR-141 type D section single

C4.4 Pipe Culverts

C4.4.1 Extensions

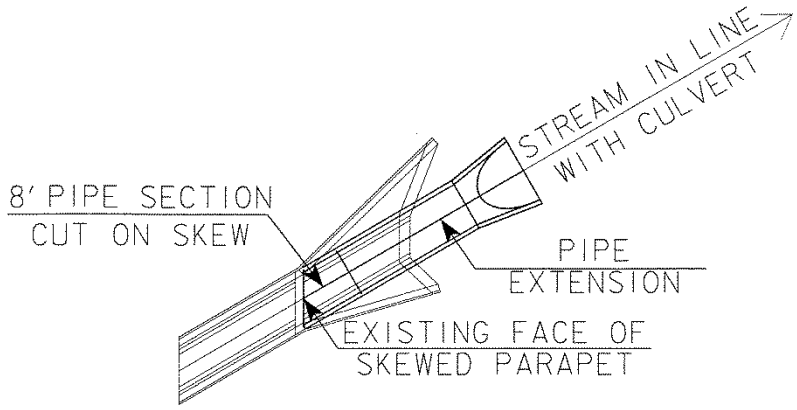

WHEN EXTENDING A 15° OR A 30° SKEWED RCB WITH ANY SIZE RCP, OR A 45° SKEWED RCB WITH A 48" DIAMETER OR LESS RCP, REMOVE HEADWALL TO THE FACE OF THE PARAPET AND EXTEND WITH AN 8' PIPE SECTION CUT TO THE SKEW ANGLE OF THE PARAPET.

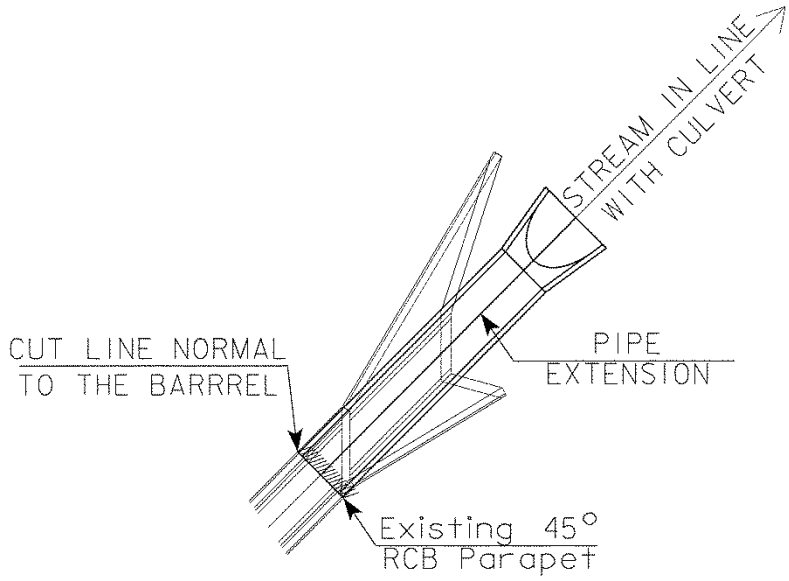

WHEN EXTENDING A 45° SKEWED RCB WITH AT LEAST A 54" DIAMETER RCP, CUT THE BARREL BEHIND THE PARAPET NORMAL TO THE BARREL.

C4.4.2 Median Pipes

C4.4.3 Cross Road Culvert Letdowns

C4.4.4 Ditch Letdowns

C4.4.5 Culvert Liners

C4.4.6 Culvert Maintenance

C4.4.7 Uplift of Culvert Inlets

C4.4.8 Trenchless Construction

C4.4.9 Slope Tapered Inlet for Pipes

January 11, 1999

Design Guidelines for Slope Tapered Pipe Culverts

The purpose of using slope tapered pipe culverts is to reduce construction costs and still provide the same hydraulic capacity and upstream headwater. The concept will be used primarily on DR-641 culverts which have concrete pipe on a relatively flat slope under the pavement and corrugated metal or polyethylene pipe down the steep fore slope of the highway embankment. The intent is to use available precast concrete pipe appurtenances and thus avoid special, costly designs by the manufacturers. This keeps the cost of material supply, and therefore total installation, lower. For example, by reducing a 48-inch pipe to a 36-inch pie, the cost savings for a 150-foot long culvert may be $25/foot X 150' = $3750. This savings should be compared to the costs of elbows and reducers to decide if a slope tapered inlet is practical at a given site.

The culvert site normally will meet two basic requirements to qualify for a tapered inlet. The first is that the additional costs for special pipe sections are offset by the reduction in construction costs. The second is that the site must have enough fall for the design to perform properly, typically at least four to six feet.

The culvert inlet is made large enough to keep the depth of water at the entrance within allowable limits. The slope taper section funnels the water down a steep slope and the barrel diameter decreases. The barrel section is designed to flow nearly full when carrying the design discharge. Frequently the outlet will have a letdown pipe or flume.

Design Steps

There are five basic steps for the hydraulic design a pipe culvert with a slope tapered inlet.

1. Determine the design discharge. The Iowa Runoff Chart shall be used for rural watersheds draining 1280 acres or less.
2. Determine the allowable depth of water at the inlet. Typically, culverts should be designed to have one foot to two feet of water above the top of the inlet.
3. Select an inlet size that results in a flow depth less than or equal to the allowable. Inlet control nomographs from FHWA's "Hydraulic Design of Highway Culverts" (HDS No. 5) can be used for this.
4. Select a barrel size and slope that results in the barrel flowing less than full. Select a slope steep enough to maintain supercritical flow. Charts in FHWA's "Design Charts for Open-Channel Flow" (HDS No. 3) have been developed from Manning's equation and can be used to select the appropriate slope.
5. Determine the drop needed for the slope section. The minimum drop needed is the specific energy at the inlet (H1) minus the specific energy at the barrel (H2) plus energy losses (HL). Specific energy is

the depth plus velocity head at a given location. The hydraulic principles for round pipe are the same as described in the section for slope tapered box culverts. Although the appearance of the Design Graph for pipe culverts is different, the calculations are similar.

The following guidelines, chart and worksheet are provided to assist in the hydraulic design.

When the inlet will be raised significantly to create a pond, geotechnical concerns must be considered to ensure that seepage through the embankment is not excessive.

Guidelines

Some of the following guidelines were verified by the hydraulic research in 1997 at FHWA's Turner-Fairbanks Highway Research Center in Virginia:

1. Use only the reductions in diameter listed in the table. Any variations to this table should be verified with detailed hydraulic calculations.
2. In order to maintain supercritical velocities in the concrete barrel, use the minimum slope or steeper as shown in the table. This assumes a depth of flow of 0.8 x D and an "n-value" of 0.012. If the discharge, slope or desired depth of flow vary from these assumptions, use FHWA's "Design Charts for Open-Channel Flow", HDS No. 3, to determine the minimum slope.
3. Concrete pipe reducers are available in four-foot long sections with six inches of diameter reduction per section. For example, if reducing pipe diameter by 12 inches two reducer sections are needed, resulting in an eight-foot length of pipe.
4. For simplicity, design both concrete elbows at 20° each.
5. The 20° elbows end-to-end will give a vertical drop (Z) of approximately 2.1 feet. If greater drop is needed as determined in the design calculations, a four-foot long section of standard pipe could be installed between the two elbows. This results in a drop of approximately 3.5 feet.
6. Pipe outlets larger than a 48-inch diameter will generally need a cast-in-place reinforced concrete flume rather than a metal or polyethylene letdown pipe.

	Diameter Reduction, inches			
Approx. Q, ft^3/sec	**From**	**To**	**Vertical Drop (Z), feet**	**Minimum Barrel Slope, %**
350	84	72	2.1	0.8
350	84	66	2.1	1.1
295	78	66	2.1	1.0
295	78	60	3.5	1.3
245	72	60	2.1	1.0
245	72	54	3.5	1.6
200	66	54	2.1	1.2
200	66	48	3.5	2.0
160	60	54	2.1	0.9
160	60	48	2.1	1.5
125	54	48	2.1	1.0
125	54	42	2.1	1.7
96	48	42	2.1	1.2
96	48	36	2.1	2.0
71	42	36	2.1	1.3
50	36	30	2.1	1.6
33	30	24	2.1	2.0

Slope Tapered Pipe Culverts

Modified Type 1501 Letdown

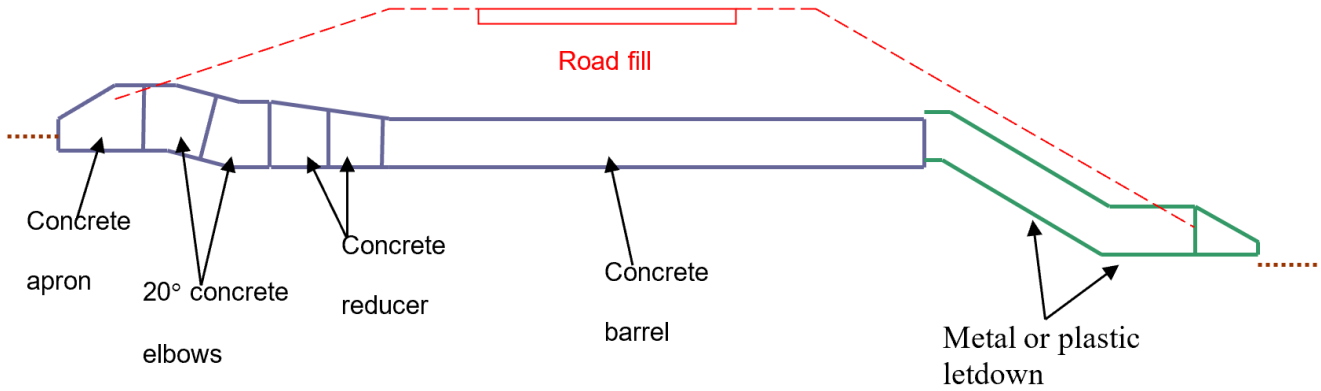

Hydraulic Performance

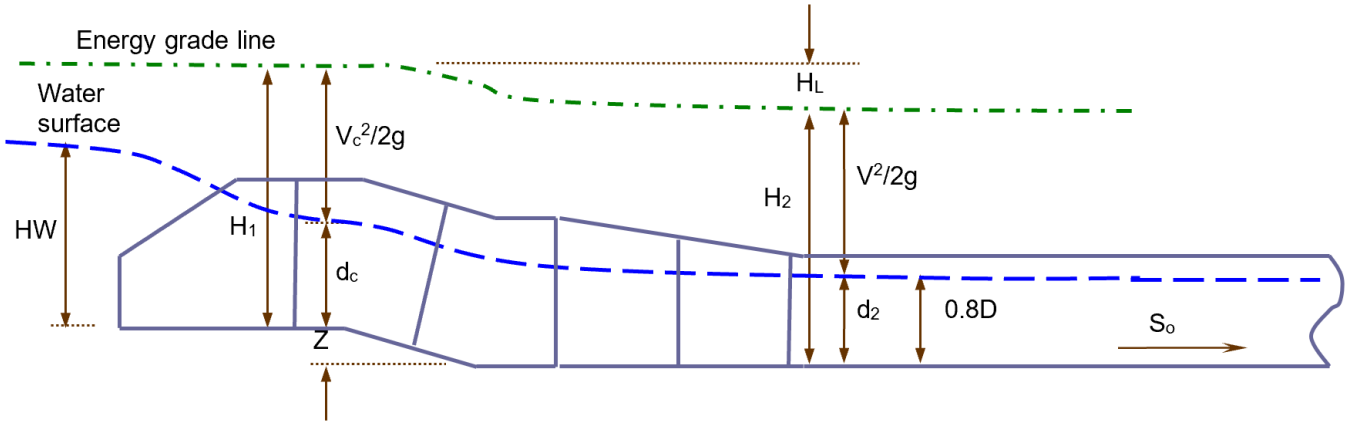

Design Graph for Slope Tapered Pipe Culverts

Specific Energy Curves for Circular Pipe

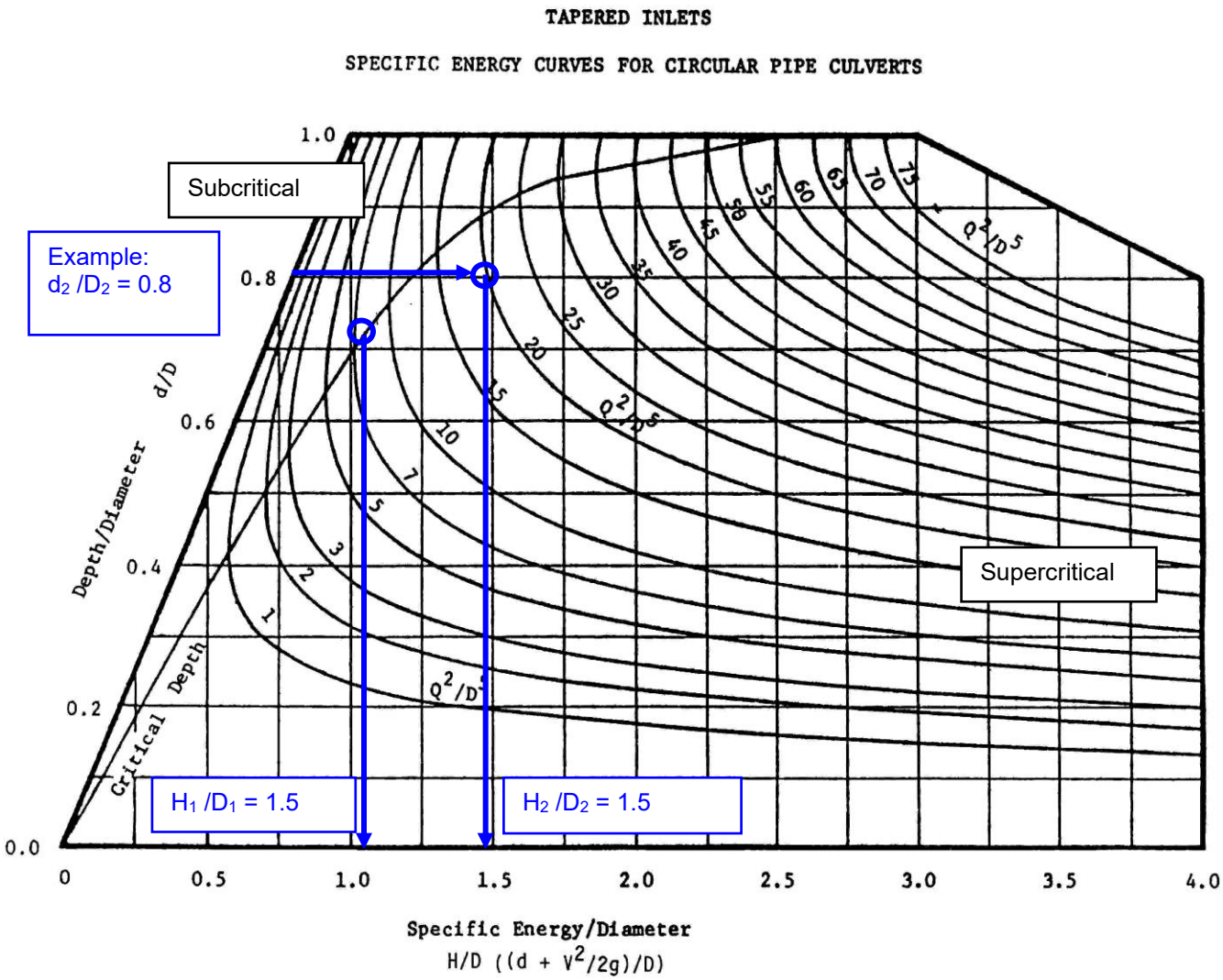

May 2, 1997

Worksheet for Slope Tapered Pipe Culverts

Project _____County_____ Sta._____

Designer_____Date_____

Variable	Example	Trial 1	Trial 2	Trial 3
Design Q , ft^3/s	250			
Inlet Section				
D_1 , ft (size of inlet)	6.0			
HW, ft (HDS #5)	7.1			
Q_1^2 / D_1^5	8.0			
d_c / D_1 (from Chart)	0.72			
H_1 / D_1 (from Chart)	1.05			
d_c , ft	4.3			
H_1 , ft	6.3			
Barrel Section				
D_2, ft (size of barrel)	5.0			
Q^2 / D_2^5	20.0			
$d_n/D_2 = 0.8$ (Design max. depth)	0.8	0.8	0.8	0.8
H_2 / D_2 (from chart)	1.50			
H_2 , ft	7.5			
Slope Tapered Section				
H_L, ft (assumed)	0.2	0.2	0.2	0.2
Z, ft (= $H_2 - H_1 + H_L$)	1.4			
Selected Z , ft	2.0			
Barrel Slope				
d_n , ft (= 0.8 X D_2)	4.5			
Min. Barrel Slope, % (table)	1.1			
Is the design acceptable?	Yes			

C4.4.10 Revetment for Pipes

C4.4.11 Fish Passable Pipe Culverts for Regulatory Compliance

C4.4.12 Temporary Run Around (on-site detour)

C4.4.13 Flap Gates for Pipes

Example deliverables related to a flap gate structure: Show the location on a TS&L when workable (or provide layout plan sheet for intended insertion into the grading plans). Pipe Remarks for 104-3 tabulation by Road Design, and Modified SW-402 Storm Sewer Manhole details (Sheets U.1-U.2). Also needed bid item reference notes.

BSB staff see Iowa DOT W: drive for examples, details, and bid item reference note template information at:

W:\Highway\Bridge\PrelimSection\Documents\Reference_Information_Notes\FlapGate-Headwall

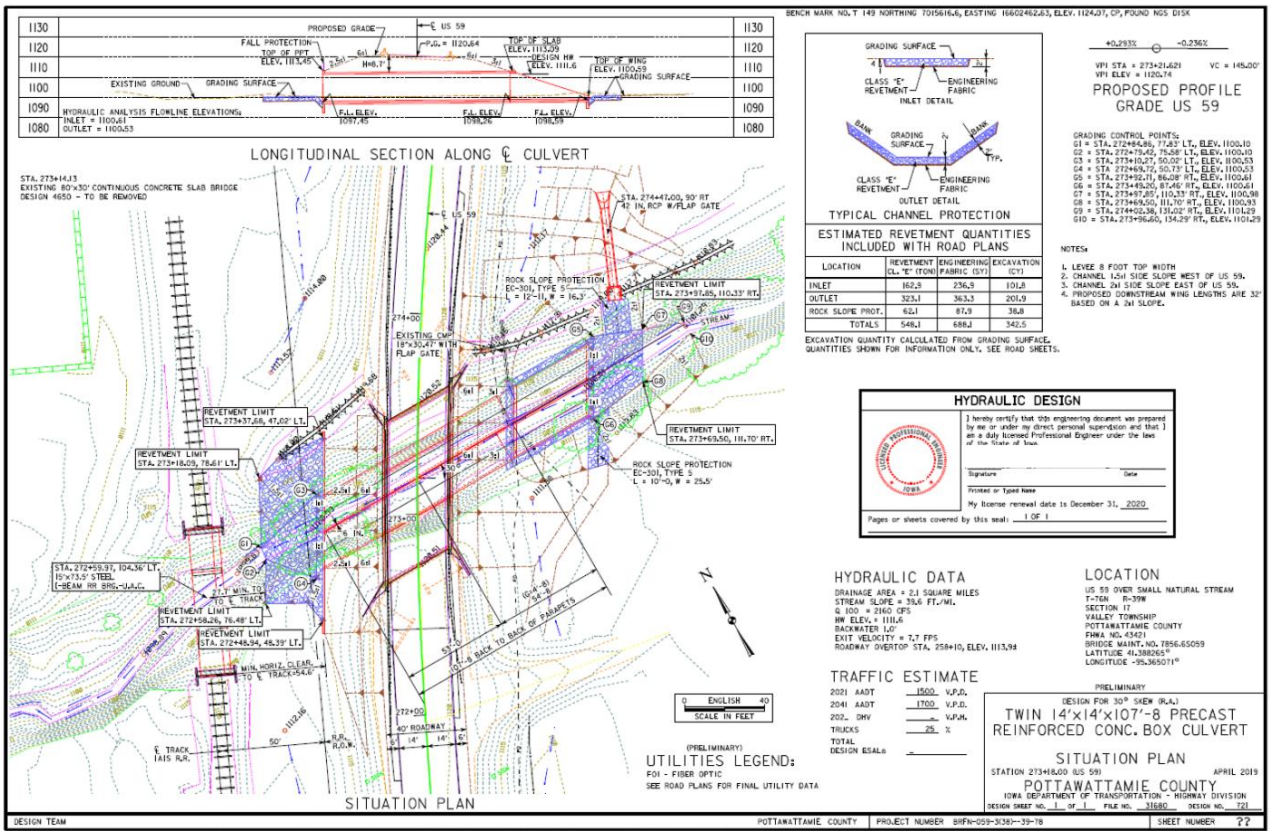
BENCH MARK NO. T 149 NORTHING 7015616.6, EASTING 1660246263, ELEV. 1124.07, CP, FOUND NGS DISK
LONGITUDINAL SECTION ALONG ℄ CULVERT
SITUATION PLAN
TYPICAL CHANNEL PROTECTION
INLET DETAIL
OUTLET DETAIL
PROPOSED PROFILE GRADE US 59
ESTIMATED REVETMENT QUANTITIES INCLUDED WITH ROAD PLANS
HYDRAULIC DESIGN
HYDRAULIC DATA
LOCATION
TRAFFIC ESTIMATE
UTILITIES LEGEND:
TWIN 14'x14'x107'-8 PRECAST REINFORCED CONC. BOX CULVERT
SITUATION PLAN
POTTAWATTAMIE COUNTY
DESIGN TEAM
PROJECT NUMBER BRFN-059-3(38)--39-78
SHEET NUMBER 22

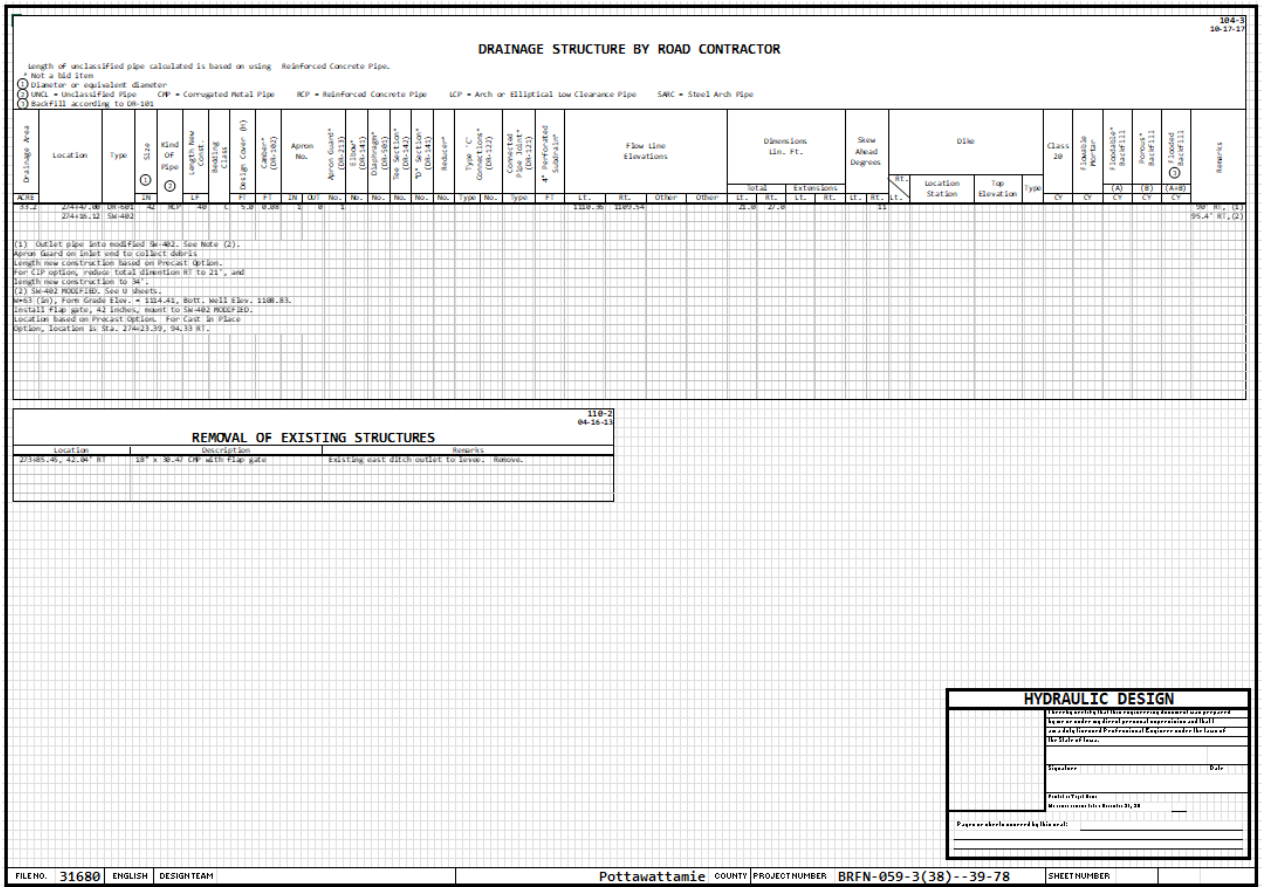
DRAINAGE STRUCTURE BY ROAD CONTRACTOR
REMOVAL OF EXISTING STRUCTURES
HYDRAULIC DESIGN
FILE NO. 31680
Pottawattamie
PROJECT NUMBER BRFN-059-3(38)--39-78

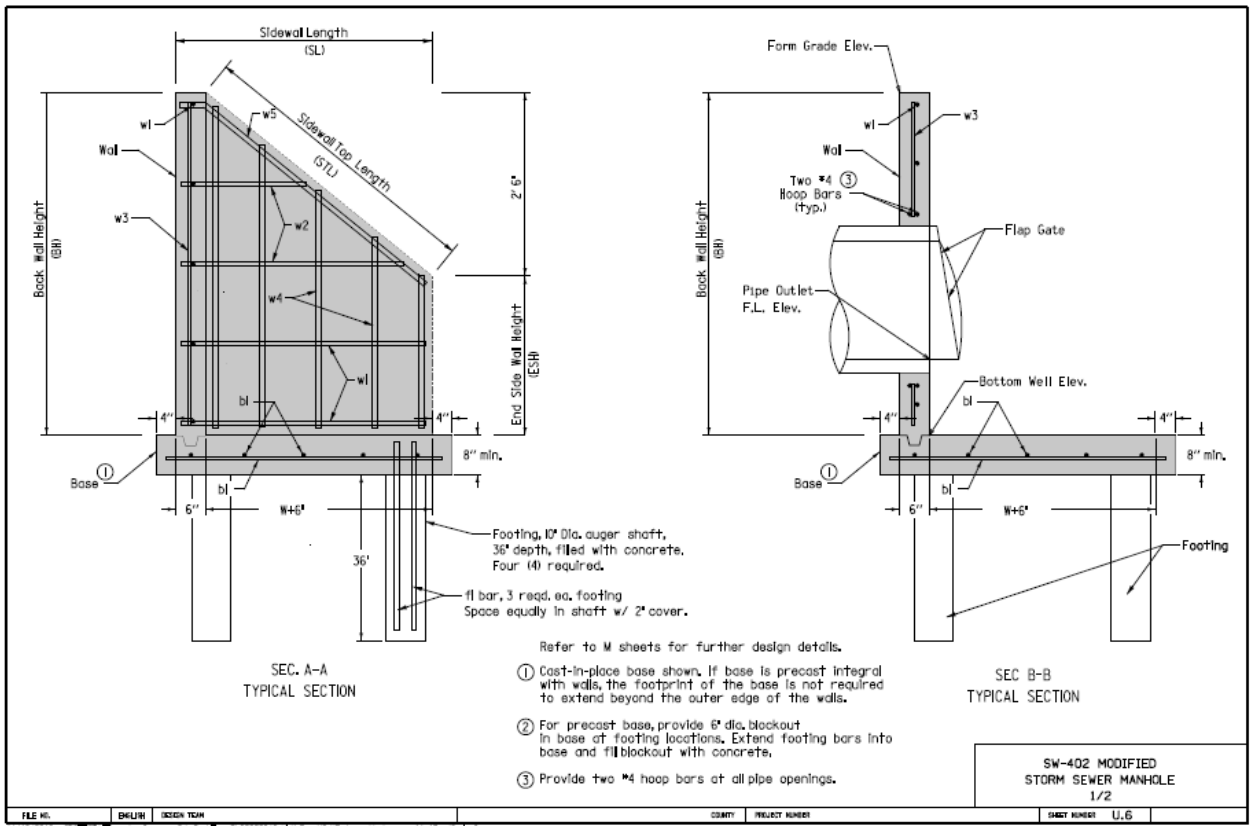

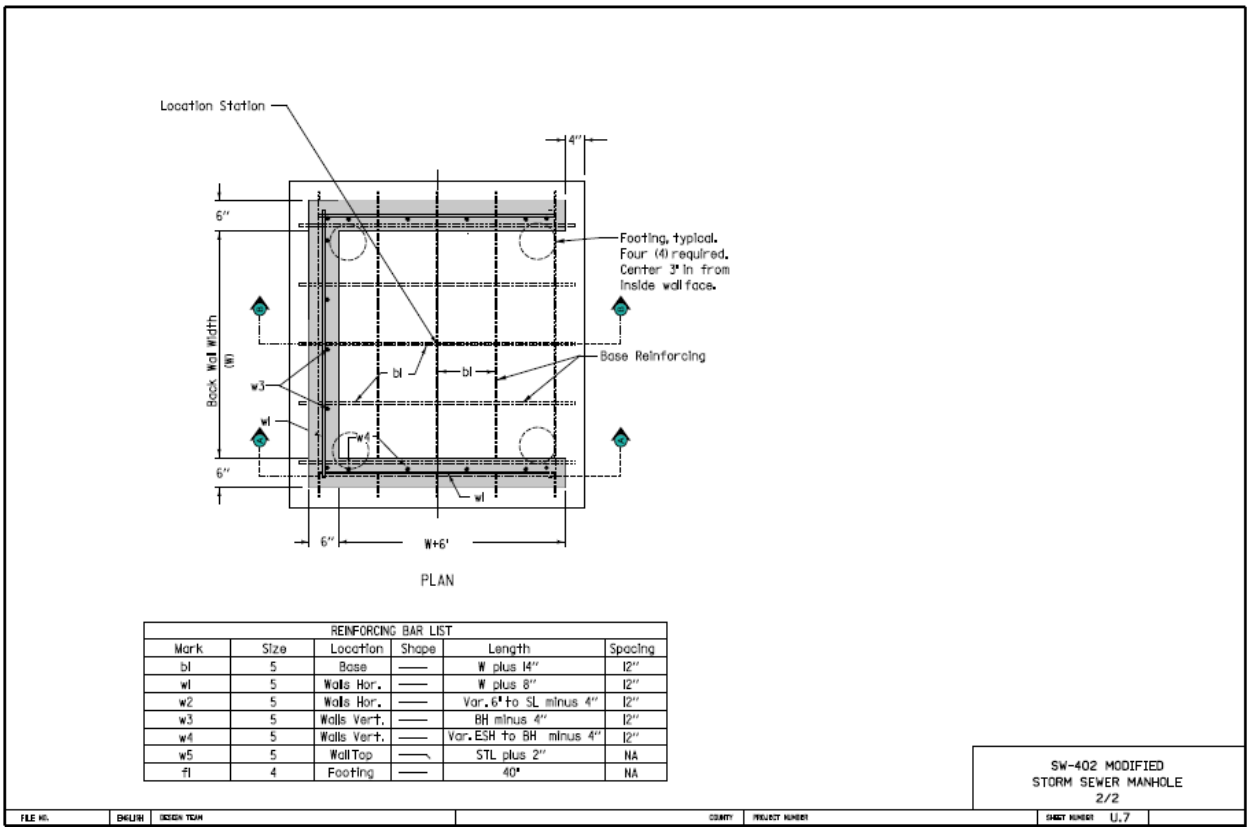

REINFORCING BAR LIST					
Mark	Size	Location	Shape	Length	Spacing
b1	5	Base	——	W plus 14"	12"
w1	5	Walls Hor.	——	W plus 8"	12"
w2	5	Walls Hor.	——	Var. 6" to SL minus 4"	12"
w3	5	Walls Vert.	——	BH minus 4"	12"
w4	5	Walls Vert.	——	Var. ESH to BH minus 4"	12"
w5	5	Wall Top	—\	STL plus 2"	NA
f1	4	Footing	——	40"	NA

C4.5 Reinforced Concrete Boxes (RCBs) and Designs

C4.5.1 Cast-in-Place RCBs

C4.5.1.1 Cast-in-Place RCB Headwalls

C4.5.2 Precast RCBs

Example Layout - Precast Multibarrel Culvert with
End Section/Parapet Not Parallel to Roadway

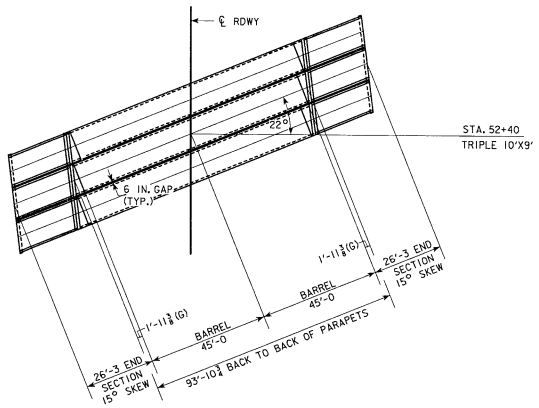

(G) DIMENSION ==> OBTAIN FROM STANDARD END SECTION SHEETS

INCLUDE THE DETAIL AND NOTE BELOW ON TSL SHEET

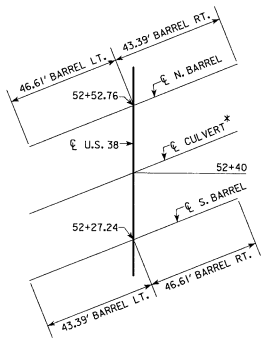

BARREL LAYOUT

INCLUDE THE FOLLOWING NOTE ON THE TSL:
"LINTEL BEAM AND CURTAIN WALLS SHALL FORM ONE CONTINUOUS LINE
AND SHALL NOT BE STAGGERED OR OFFSET."

* FOR TWIN CULVERTS, THE CENTERLINE CULVERT EQUALS THE CENTERLINE OF GAP.

DECEMBER 8, 2017

C4.5.3 RCB Extensions

C4.5.4 Flumes and Scour Floors

Typical Scour Floor

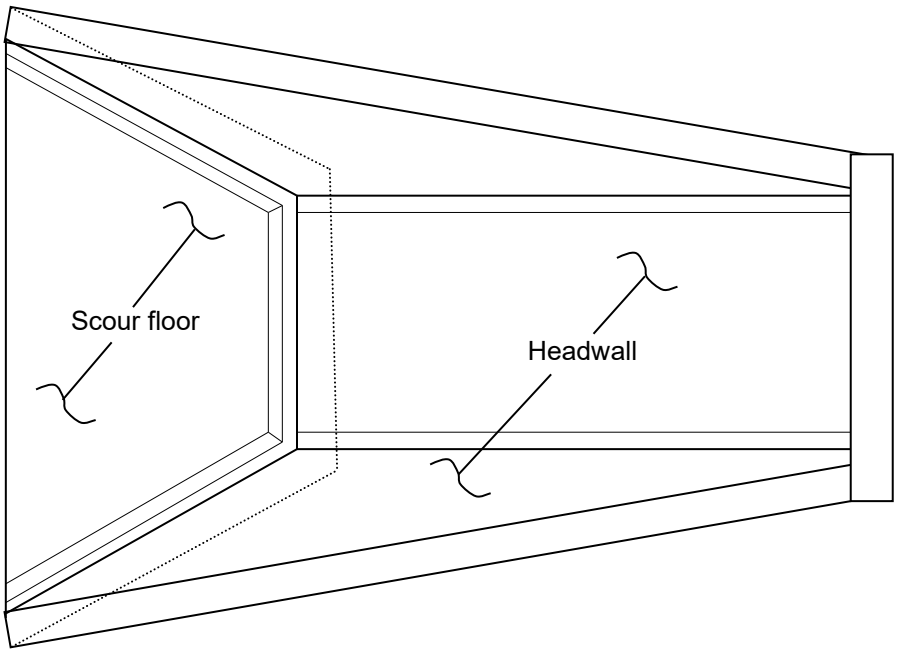

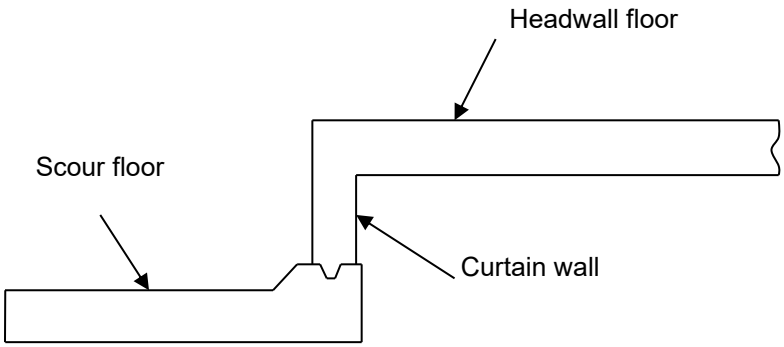

Section through scour floor

C4.5.5 Drop Inlets

Design Guidelines for Drop Inlet Culverts

Drop inlets for pipe and box culverts can be beneficial solutions to some drainage and erosion problems. Hydraulically, they are useful when a culvert has limited available head upstream. Also, they can be used to raise the flowline to create a pond or stop channel erosion upstream.

When evaluating the hydraulics of drop inlet culverts, two controls must be checked to determine the design high water of the culvert. The first is barrel control using the orifice equation, also known as the full-flow equation, taken from a U.S. Soil Conservation Service technical memorandum for drop inlets. The equation is similar to the outlet control equation in FHWA's "Hydraulic Design of Highway Culverts", HDS No. 5. The second is weir control, using the broad-crested weir equation. The equation giving the highest water elevation is considered the controlling headwater.

A trial and error solution is needed to determine what size of barrel and weir are needed. Start by sizing the barrel and analyzing the hydraulics. When an acceptable size and headwater are obtained, assume a drop inlet opening of 1.5 to 2.0 times the barrel opening. Then calculate the head created by the weir and determine if a different size inlet is needed.

Worksheets are attached to aid in the calculations.

Barrel (Full Flow) Equation

$$Q = A\left[\frac{2\,g\,H}{1 + K_e + K_b + K_f \quad L_b}\right]^{0.5}$$

where Q = discharge, ft^3/sec
- A = area of culvert barrel, ft^2
- g = acceleration due to gravity = 32.2 ft/sec^2
- H = head (energy) needed to pass the flow through the barrel, feet
- K_e = entrance loss coefficient
- K_b = bend loss coefficient
- L_b = length of barrel, ft
- K_f = friction loss coefficient = $29.16\ n^2 / R^{1.33}$
- n = roughness coefficient
- R = hydraulic radius of barrel = area / wetted perimeter, ft

Assume $K_e + K_b = 1.0$ for typical Iowa DOT drop inlet
- n = 0.012 for smooth pipe, or 0.024 for corrugated metal
- R = A/2(W + H) for RCBs or D/4 for round pipe barrels
- h_o = height of hydraulic grade line at outlet = TW or $(d_c + D)/2$, whichever is greater, ft
  (TW can be determined from Manning's equation using a downstream valley section. d_c can be found in Chart 4 or 14 in FHWA's HDS No. 5. D is the height of the barrel.)

This results in the following full flow equation, assuming a smooth (e.g., concrete) barrel:

$$Q = A\left[\frac{64.4\,H}{2 + 0.0042\dfrac{L_b}{R^{1.33}}}\right]^{0.5}$$

Or solving for H,

$$H = \left[\frac{0.1246\;Q}{A}\right]^{2}\left[\;2\;+\;\frac{0.0042\;L_b}{R^{1.33}}\right]$$

H is the head (energy loss) required to pass the flow through the barrel. To determine the headwater (HW) elevation at the inlet, add H and h_o to the outlet flowline elevation, where h_o is either tailwater (TW) depth or $(d_c + D)/2$, whichever is greater. (See Chapter III of FHWA's "Hydraulic Design of Highway Culverts", HDS No. 5, for a more detailed discussion of barrel [outlet] control.)

Then compare HW elevation to allowable head water (AHW) elevation. If HW > AHW, a larger barrel is needed. If HW < AHW, either try a smaller barrel size or proceed with the weir control calculations as described below.

Weir Equation

$$Q = C\ L_w\ H^{1.5}$$

where Q = discharge, ft^3/sec

C = coefficient. Use C = 3.09

L_W = effective length of weir, feet. The typical IDOT drop inlet has a parapet on one side, so consider only three sides to determine L_w. (The parapet improves the inlet efficiency by minimizing vortex action.)

H = head, feet

(H actually is depth plus velocity head, but for simplicity assume velocity head as negligible. This will result in a conservative headwater design.)

Or solving for H,

$$H = \left[\frac{Q}{C\ L}\right]^{0.667}$$

(Equation 3)

H is the head above the drop inlet flowline. To determine HW elevation for weir control, add H to the weir elevation and compare to the AHW elevation. If HW > AHW, then a larger weir is needed. If HW < AHW, either try a smaller weir or proceed with the selected size.

After an acceptable weir size is selected, compare HW for weir control to HW for barrel control. In essence, this comparison finds out which portion of the culvert is the most hydraulically restrictive: the weir or the barrel. The higher HW is the controlling elevation and indicates how high the water will get upstream of the culvert during the design flood.

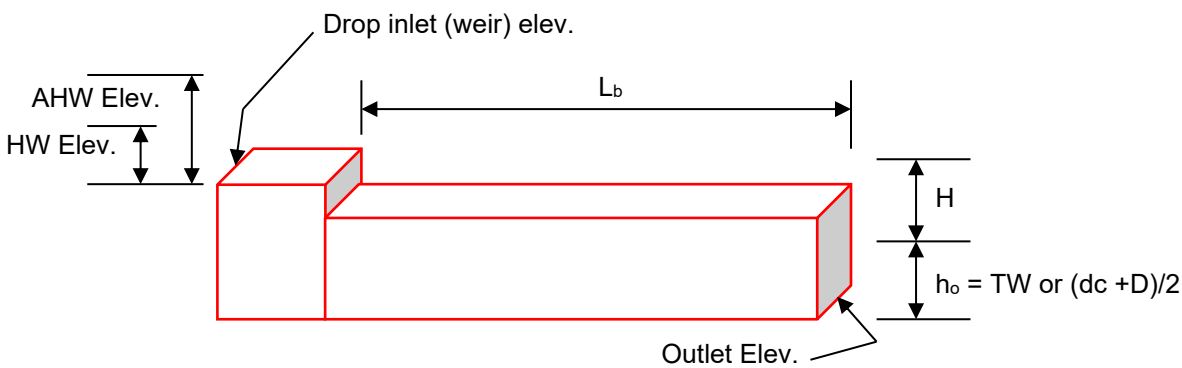

Sample Drop Inlet Culvert

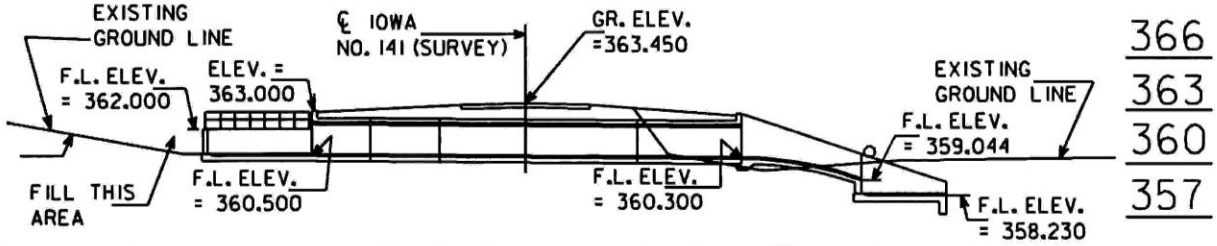

LONGITUDINAL SECTION ALONG ℄ CULVERT

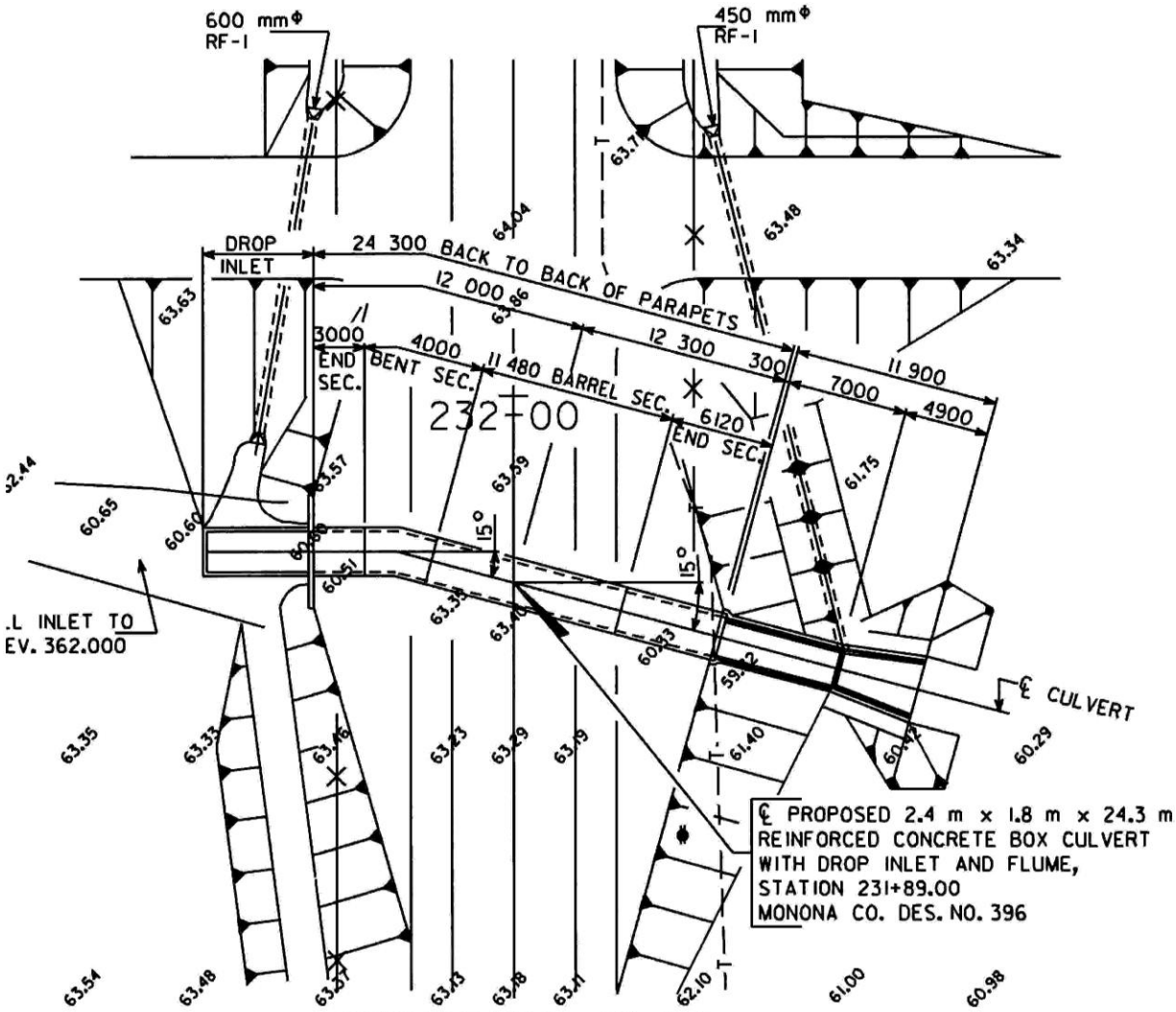

SITUATION PLAN

Typical Drop Inlet Detail

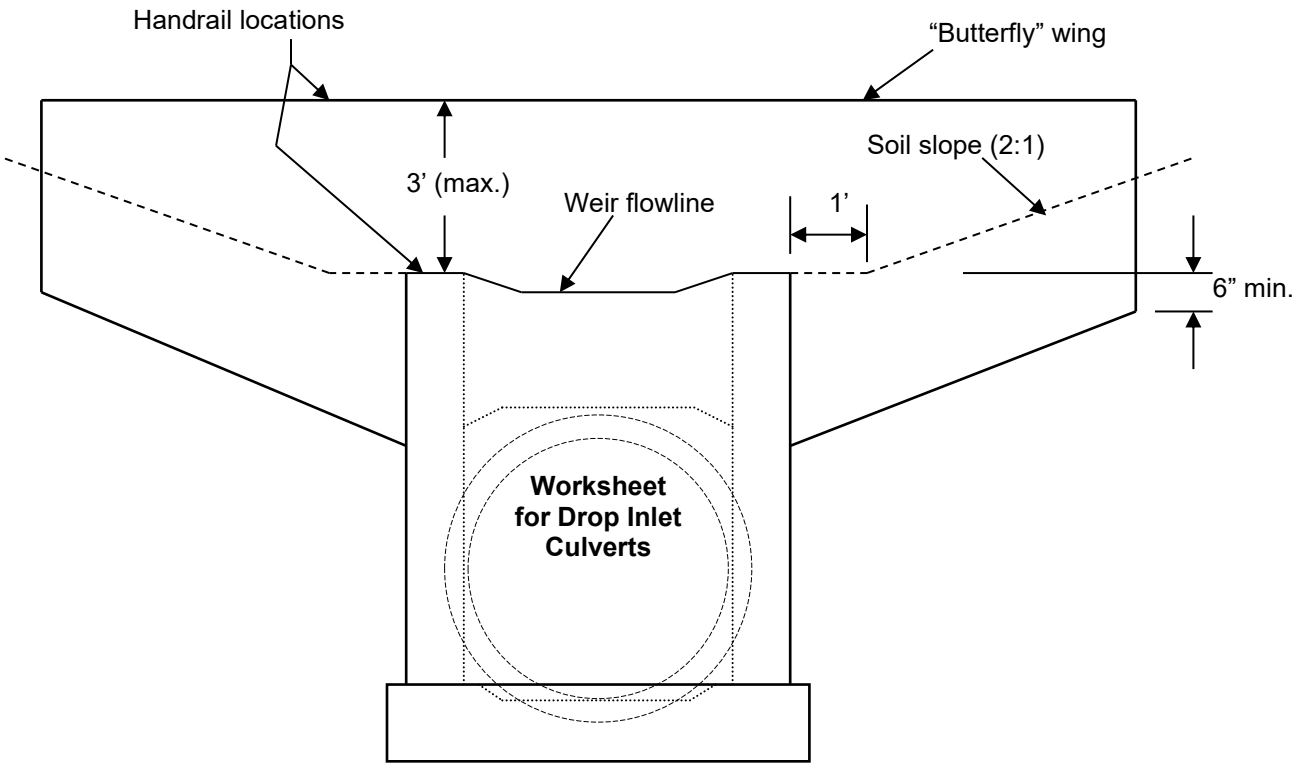

Front view

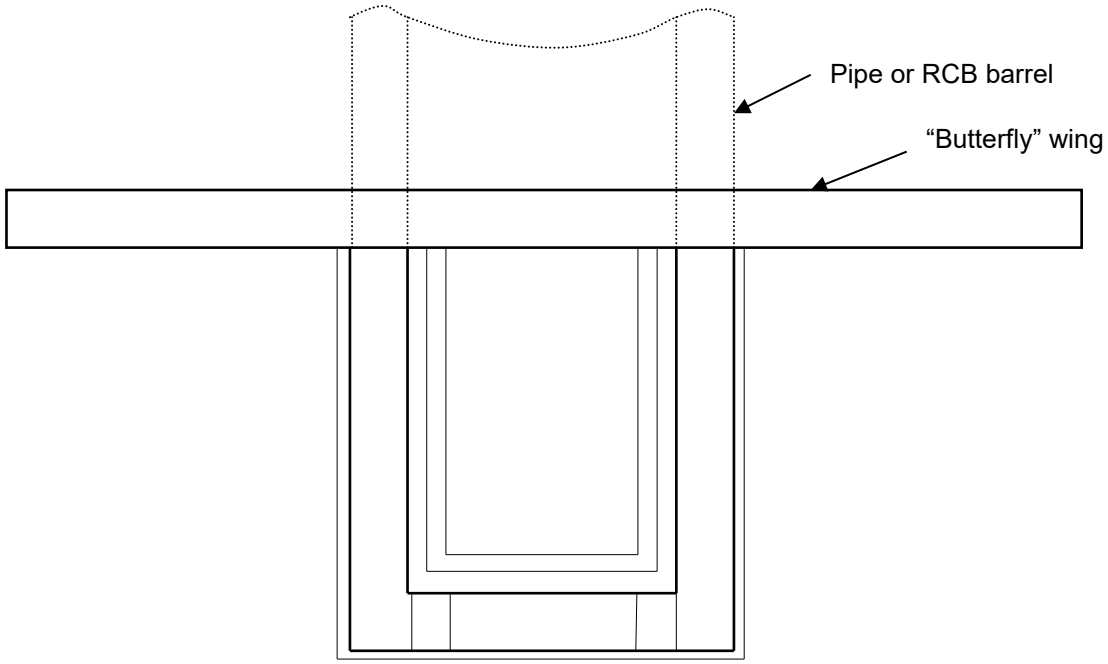

Plan view

Project _____County_____Des. No._____
Sta_____Designer_____Date _____

	Example	Trial 1	Trial 2	Trial 3	Trial 4
Design Q, ft^3/sec	150				
Allowable HW Elev. (AHW)	108.0				
Barrel Design					
Barrel Size, ft X ft	4 X 4				
A, ft^2	16				
WP, ft	16				
R, ft (= A/WP)	1.0				
L_b, ft	80				
H, ft (Eqn. 1)	3.2				
$(d_c + D)/2$, feet	3.7				
TW, feet	4.0				
h_o, ft (= greater of TW or $(d_c + D)/2$)	4.0				
Barrel Outlet Elev.	100.0				
HW Elev. (=H + h_o + outlet elev.)	107.2				
Acceptable? If no, try a different barrel size.	Yes. HW < AHW.				
Weir Design					
Weir Size, ft X ft	4 X 8				
C	3.09	3.09	3.09	3.09	3.09
L_w, ft	20				
H, ft (Eqn. 3)	1.8				
Weir Elev.	106.0				
HW Elev.	107.8				
Controlling HW Elev.	107.8				
Acceptable? If no, try a different size.	Yes. HW < AHW.				

Slope Tapered Inlets for RCBs

Design Guidelines for Slope Tapered Box Culverts

The purpose of slope tapered box culverts is to reduce construction costs by using a smaller barrel but still providing acceptable hydraulic capacity and upstream headwater. These special inlets have been used in Iowa and across the country since the 1950s or earlier. The design of these inlets includes rigid hydraulic design and good construction practice.

The culvert site normally will meet two basic requirements to qualify for a tapered inlet. The first is that the additional design costs are offset by the reduction in construction costs. The second is that the site must have enough fall for the design to perform properly, typically at least six to eight feet.

The culvert inlet is made large enough to keep the depth of water at the entrance within allowable limits. The slope taper section "funnels" the water down a steep slope as the culvert width decreases. The barrel section is designed to flow nearly full when carrying the design discharge. Generally, the outlet has a flume and basin for energy dissipation.

Design Steps

There are five basic steps for the hydraulic design a box culvert with a slope tapered inlet.

1. Determine the design discharge. The Iowa Runoff Chart shall be used for rural watersheds draining 1280 acres or less.
2. Determine the allowable depth of water at the inlet. Typically, culverts should be designed to have one foot to two feet of water above the top of the inlet.
3. Select an inlet size that results in a flow depth less than or equal to the allowable. Inlet control nomographs from FHWA's "Hydraulic Design of Highway Culverts", HDS No. 5, can be used for this.
4. Select a barrel size and slope that results in the barrel flowing less than full. The barrel height should be the same as the inlet, while the barrel width should generally be no less than 50 to 60% of the inlet width. Select a slope steep enough to maintain supercritical flow. Charts in FHWA's "Design Charts for Open-Channel Flow", HDS No. 3, have been developed from Manning's equation and can be used to select the appropriate slope.
5. Determine the drop and length of the slope tapered section. The minimum drop needed is the specific energy at the inlet (H_1) minus the specific energy at the barrel (H_2) plus energy losses (H_L). Specific energy is the depth plus velocity head at a given location.

The following guidelines, charts and worksheets are provided to assist in the hydraulic design.

When the inlet will be raised significantly to create a pond, geotechnical concerns must be considered to ensure that seepage through the embankment is not excessive.

General Guidelines

1. HW from inlet control charts for proposed inlet size, no greater than D + 2 ft.
2. The height (D) of the structure does not change.
3. Calculated Z may be rounded to the next higher increment as described below.
   Minimum Z = 3 ft.
4. Taper can be designed by using the RCB standard reinforced steel pattern of inlet size for the entire length of the taper and varying the length of the transverse steel.
5. The barrel outlet flowline is usually set at least ½ (D) above streambed. This prevents the barrel from "drowning out".
6. The outlet usually has a flume with a basin that is buried 4 ft. to 6 ft. below streambed, to help dissipate energy.
7. The barrel slope (S_o) should generally be 1.5% or steeper in order to maintain supercritical flow and the maximum flow depth of 0.9D in the barrel. (See "Design Charts for Open Channel flow", HDS No. 3, FHWA, to determine specific flow depths for various slopes.)
8. An attempt should be made to design barrel sizes to conform with standard RCB sizes. This may mean starting with a "wide" non-standard inlet.
9. Assume energy loss, H_L = 0.2 ft. for all cases.

Guidelines for single RCBs

1. Use drop rate (L/Z) of approximately 3:1.
2. Ratio of barrel width to inlet width (B_2/B_1) should be 50% or greater.
3. For Z=3 ft., use L=10 ft. For Z=4 ft., use L=12 ft. For Z=5 ft., use L=15 ft.

Guidelines for Twin RCBs

1. Use drop rate (L/Z) of 5:1 (min.)
2. Ratio of barrel width to inlet width (B_2/B_1) should be 60% or greater.
3. L is determined either by (B_1 - B_2) x 4 or Z x 5, whichever is greater. This insures a minimum side taper of 4:1. L should generally be in 5 ft. increments.

Definitions

HW -- Headwater from inlet control charts
H_1 -- Specific energy head at inlet
H_2 -- Specific energy head at barrel
B_1 -- Width of inlet opening
B_2 -- Width of barrel opening
D -- Height of opening
H_L -- Energy loss
d_c -- Critical depth
Z -- Drop in flowline required
L -- Length of taper section
S_o -- Slope of barrel
$V^2/2g$ -- Velocity head
N = L/Z = Slope of taper section

Slope Tapered Box Culverts

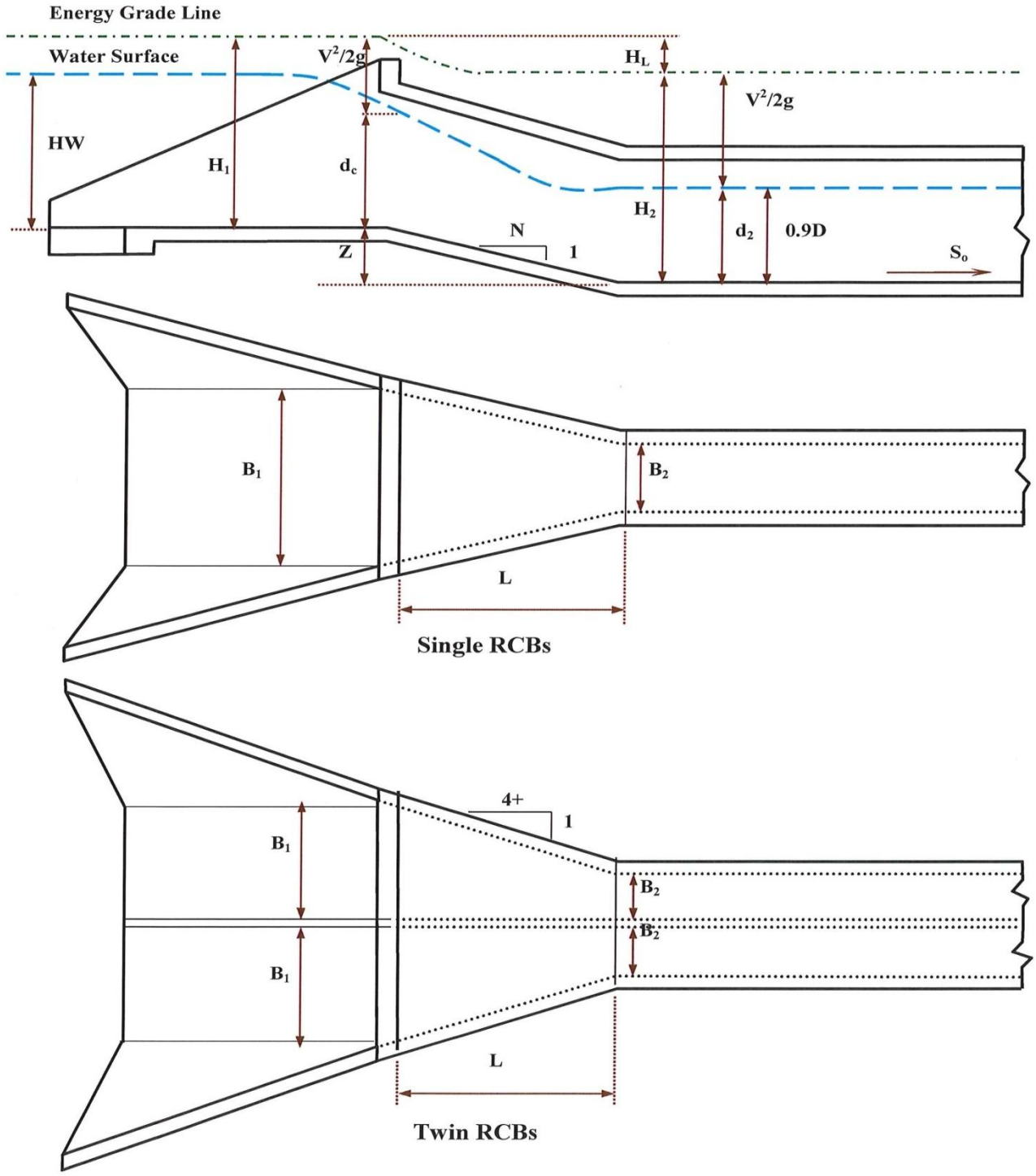

Sample Slope Tapered Box Culvert and Flume

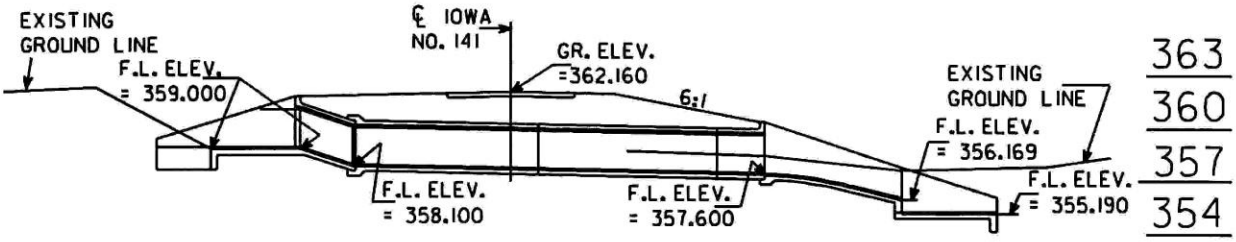

LONGITUDINAL SECTION ALONG ℄ CULVERT

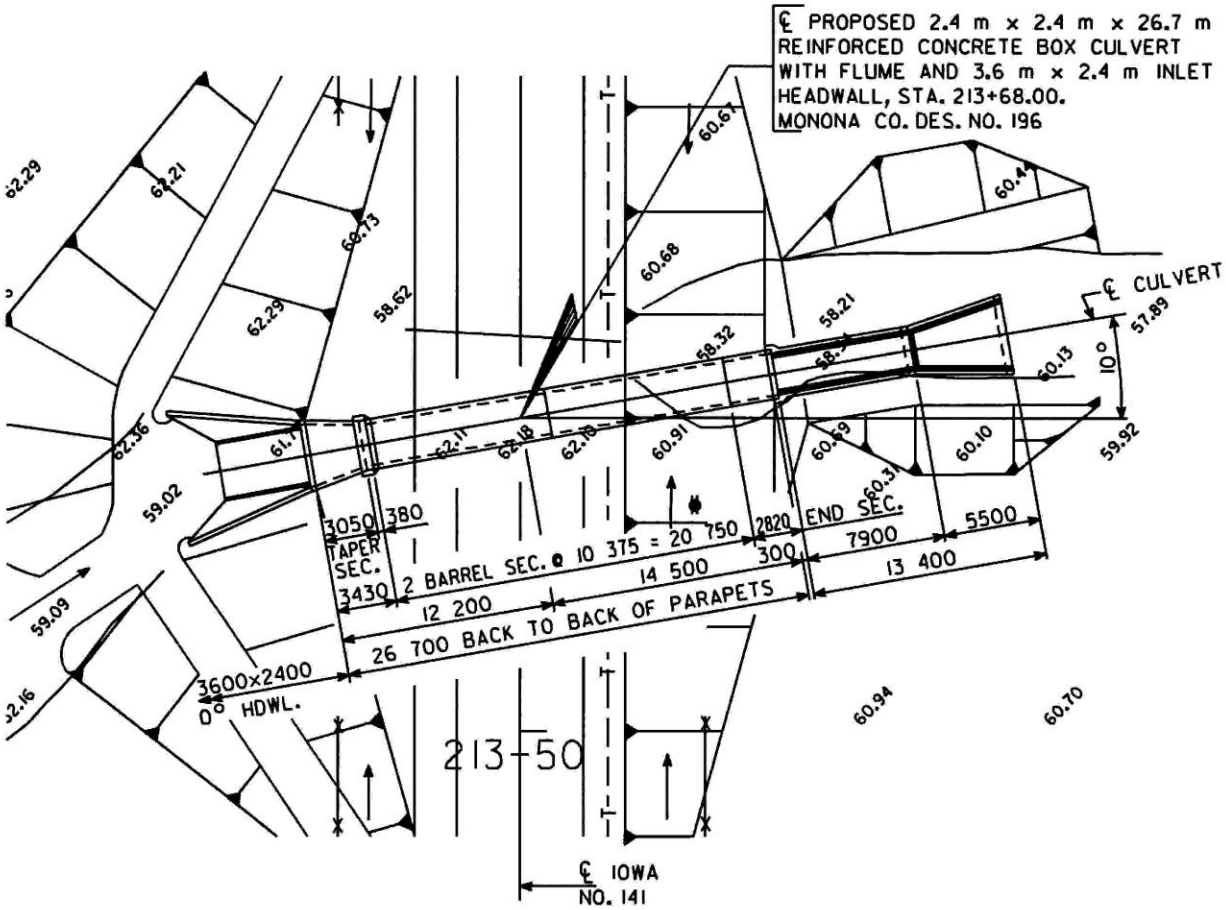

SITUATION PLAN

Design Graph for Slope Tapered Box Culverts

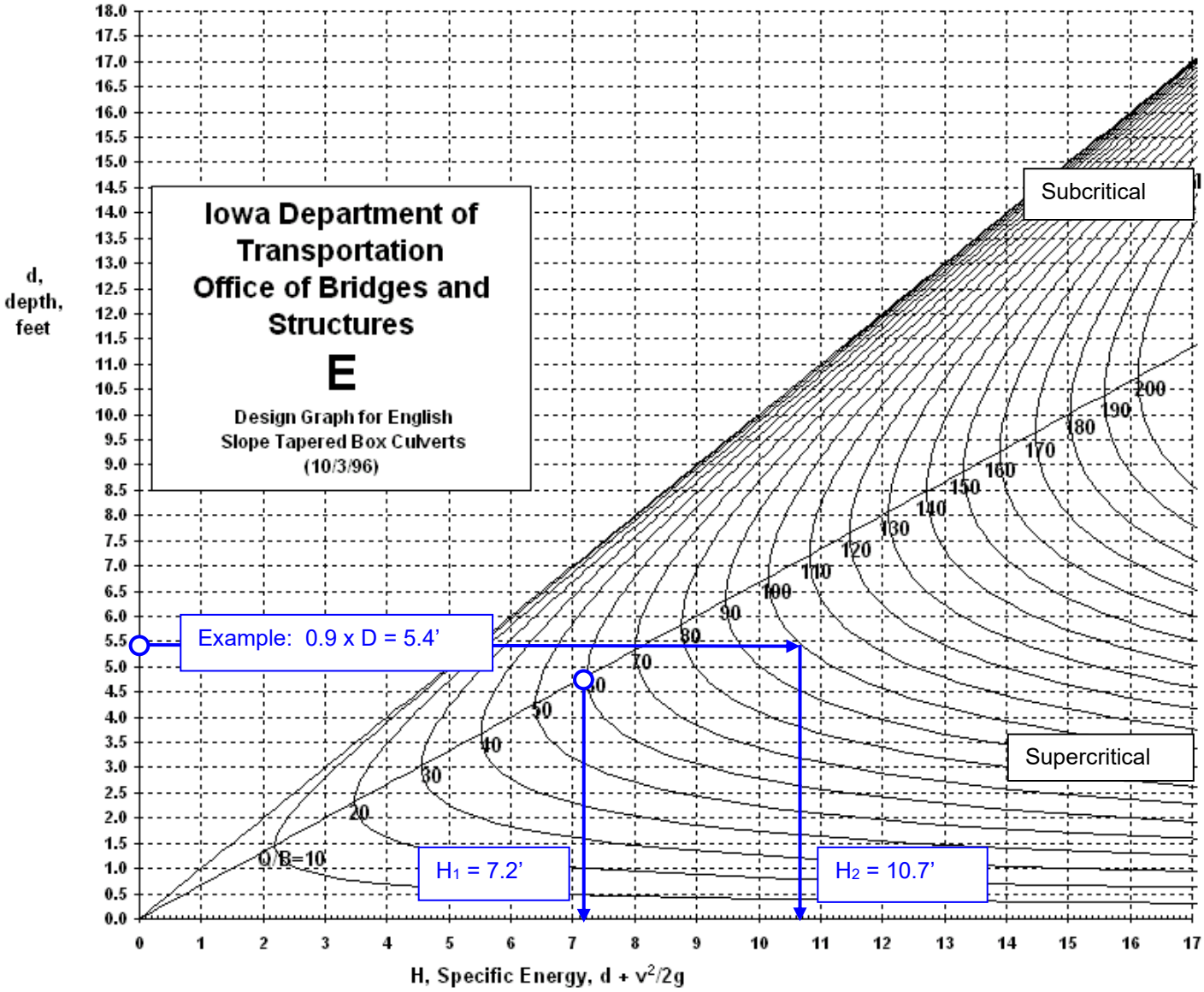

May 29, 1998

Worksheet for Slope Tapered Box Culverts

Project _____County_____Des. No._____

Sta_____Designer_____Date _____

Variable	**Example**	**Trial 1**	**Trial 2**	**Trial 3**	**Trial 4**
Design Q, ft^3/sec	600				
Inlet Section					
B_1 X D, ft x ft (size of inlet)	10 X 6				
Q/B_1	60				
HW, ft (from HDS #5 nomographs)	7.5				
d_c, ft (from Design Graph)	4.8				
H_1, ft (from Design Graph)	7.2				
Barrel Section					
B_2 X D, ft x ft (size of barrel)	6 X 6				
Q/B_2	100				
0.9 X D, ft	5.4				
H_2, ft (from Design Graph)	10.7				
Slope Tapered Section					
H_L, ft (assumed)	0.2	0.2	0.2	0.2	0.2
Z, ft (= H_2 - H_1 + H_L)	3.7				
Selected Z, ft	4.0				
Selected L, ft	12				
Barrel Slope					
d_n = 0.9 X D, ft	5.4				
Min. Slope, % (from HDS No. 3 or Mannning=s eqn.)	1.5				
Is the design acceptable?	Yes				

Bridge Replacements with RCBs Using Flowable Mortar

C4.5.6 Revetment for RCBs

The following guidance and decision/evaluation matrix is provided to assist designers in determining a need for revetment. Include a designer note on the TS&L listing the justification when proposing revetment.

Culvert revetment requirements are based on the location of the structure in the riverine environment as follows:

Main or secondary channel locations (main)-

A main channel culvert is located at a crossing of primary channel or stream that would be anticipated to transport sediment (live bed scour condition). A secondary channel is defined as a secondary channel of the primary stream that is also anticipated to transport sediment (live bed scour condition) during a flood event on the primary stream.

Floodplain overflow culverts (overflow)-

Culverts located in the floodplain of a stream, that would be subject to clear water scour.

Major drainage basins (major)-

Culverts located in the floodplain of a large drainage basin that may be subject to long duration flooding in a clear water environment and subject to clear water scour. Time of concentration is greater than 48 hours. The SCS (NRCS) watershed lag equation can be used to estimate Time of Concentration (Tc) as follows. Refer to equation 15-4b, NRCS part 630 Hydrology, Chapter 15, Time of Concentration.

$$Tc = \frac{L^{0.8} x (S+1)^{0.7}}{1140 x Y^{0.5}}$$

Tc = Time of Concentration (hr)
L = Flow Length (ft)
Computed by StreamStats, element length of ‘longestflowpath3d’ GIS feature.
Provided in Meters in ‘SHAPE_Le’ field of feature.
S = Retention (in). Use S=3.699 (Curve Number=73, typical value in Iowa) unless otherwise determined.
Y = Average Watershed Land Slope (%)
Computed by StreamStats, BSLDEM10M parameter.

Decision and Evaluation Matrix for Culvert Revetment Recommendations

Small RCB's or pipes (size less than 6')	Large RCB's or pipes size 6' or greater Main or Secondary Channel Locations	Large RCB's or pipes size 6' or greater in overflow locations	Large RCB's or pipes size 6' or greater in overflow locations and major drainage basin
Include revetment based on site specific features(1)	Include revetment based on site specific features(1)	Include revetment based on site specific features(1)	Include revetment based on site specific features(1)
Include outlet revetment if outlet velocity exceeds: main 8 ft/s, overflow 6 ft/s, major 4 ft/s. Check for the event that results in the highest outlet velocity through the 100-year event.	Include outlet revetment if outlet velocity exceeds 6 ft/s, unless a check of erosion potential indicates it is not needed(2). Check for the event that results in the highest outlet velocity through the 100-year event.	Include outlet revetment if outlet velocity exceeds 4 ft/s. Check for the event that results in the highest outlet velocity through the 200-year event.	Include outlet revetment.
	Provide revetment when recommended for multi-box sedimentation mitigation(3)	Provide a site specific revetment design for lining sump features (grade control) at the culvert inlet to prevent formation of upstream ravines or channels.	Consider inlet revetment similar to overflow locations.

(1) Site features warranting revetment may include but are not limited to: channel bends, apparent downstream degradation, potential bank erosion, or angle of attack
(2) Utilize DOT preferred method described below
(3) See BDM 4.5.14. Revetment may include Articulating Block Mat.

<u>DOT preferred method to estimate culvert erosion potential for large RCB's or pipes at main or secondary locations</u>

For live bed (stream) situations, erosion potential can be based on estimates using the live bed scour equation [BDM C3.2.2.7] as follows:

1. Pick an unscoured section (W1, D1, Q1) just like bridge scour.
2. W2, D2, Q2 is at the end of the headwall. Q2 is culvert outflow.
3. Holding D2 as depth (TW-FL), solve for W2. This will give an estimate of maximum widening just downstream of the culvert.
4. Holding W2 as width (at end headwall), solve for D2. This will give an estimate of maximum depth (scour) just downstream of the culvert.

Evaluate based on the 100-year or lesser event, whichever results in the most calculated widening or scour. Base revetment needs on estimated increase in W or D. For example, if W2 calc vs. W2 provided < 4 ft., or D2-(TW–FL) <2' (scour depth <2') revetment may not be needed.

C4.5.7 Grading Control Points

C4.5.8 Stock Passes

C4.5.9 Costs

C4.5.10 Alternative Structure Type

C4.5.11 Staging

GEOTEXTILE RETAINMENT FOR STAGED CULVERTS

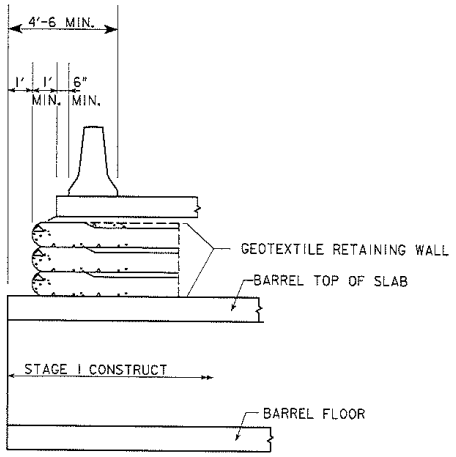

SECTION VIEW

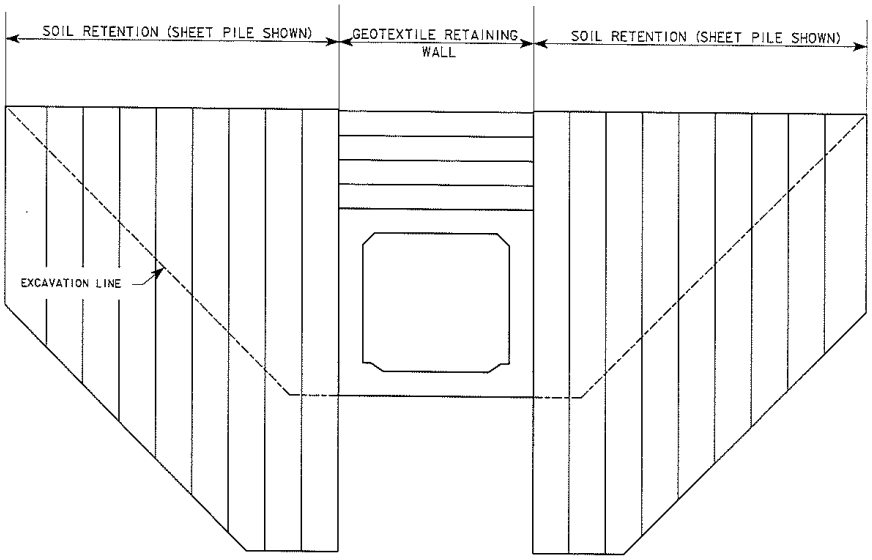

FRONT VIEW

OCTOBER 11, 2017

FIGURE ADAPTED FROM ILLINOIS DOT CULVERT MANUAL DATED AUGUST 2016

C4.5.12 Multi-Barrel RCB Culvert Sedimentation Mitigation

C4.5.13 Fish Passable Box Culverts for Regulatory Compliance

C4.5.14 Pedestrian or Shared Use Path RCB

C4.6 Permits and Approvals

C4.7 Submittals

TABLE OF CONTENTS ~ BRIDGE SUPERSTRUCTURE DESIGN

5 Bridge Superstructure Design
5.1 General
5.1.1 Policy overview
5.1.2 Design information
5.1.3 Definitions
5.1.4 Abbreviations and notation
5.1.5 References

5 Bridge Superstructure Design

5.1 General

The series of articles under Section 5, Bridge Superstructure Design, is intended to fit together as a unit. As much as possible, cross references are used to avoid duplication.

5.1.1 Policy overview

In the Bridges and Structures Bureau, the design of typical highway bridges proceeds from Preliminary to Final Design Units. The Preliminary Design Unit selects the superstructure type based on bridge site information, available locations for substructure components, spans between substructure components, and criteria stated in *Bridge Design Manual* Section 3, Preliminary Design. In some cases, the Preliminary Bridge Design Unit also considers aesthetic criteria in Section 9, Aesthetic Design. A Final Design Unit then completes the structural design and detailing following the policies in Section 5, Bridge Superstructure Design, and Section 6, Bridge Substructure Design.

The Bureau interprets the basic AASHTO LRFD Specifications when designing superstructures, bearings, and additional components and specifies rules for detailing these components. This series of articles on superstructure components covers most typical designs but does not cover special bridge designs for signature bridges and long-span bridges.

In all cases, superstructure components need to be designed for vertical and lateral loads, strength, serviceability, and economy considering the entire bridge structure.

For typical highway bridge superstructures, the Bureau generally selects among four types: continuous concrete slab (CCS), pretensioned prestressed concrete beam (PPCB), continuous welded plate girder (CWPG), and rolled steel beam (RSB). In general CCS bridges are used for short spans up to 59 feet and total bridge lengths up to 150 feet or where minimum superstructure depth is required over short spans. PPCB bridges are used for longer spans to 155 feet. CWPG bridges are used for spans longer than 155 feet, where minimum superstructure depth is required, or where the horizontal alignment is sharply curved. Except for unusual conditions the Bureau limits bridge skew to 45 degrees.

Standard sheets and details and signed standard bridge plans that follow current policies are available for efficient design of the typical superstructures. In all cases, however, the standard sheets and standard bridge plans need to be supplemented with additional sheets to produce a complete plan set for a bridge project.

The Bureau has signed standard plans for a series of three-span CCS bridges that may be used for relatively simple alignments and site conditions. The standard CCS bridges, which are intended for stream and small valley crossings, have 40 and 44 foot roadway widths, lengths varying from 70 to 150 feet, and skews from 0 to 45 degrees.

The general availability of standard sheets and standard bridge plans for primary highway system projects is summarized in Table 5.1.1. All items listed in the table have roadway widths of at least 30 feet.

Table 5.1.1. Summary of standard sheets and signed standard bridge plan availability

Superstructure type	Number of spans	AASHTO live load and specification	
		Standard sheets	Signed standard plan sets
CCS, J40, and J44 series (1)	3	---	HL-93 LRFD
PPCB	---	HL-93 LRFD	---
CWPG	---	HL-93 LRFD	---

Table notes:

(1) The 24 and 30-foot wide bridges (not shown in the table) are generally intended only for county and city use.

The Bureau prefers jointless bridges and therefore, wherever practical, selects integral abutments and continuous construction at piers. In cases where expansion joints are necessary due to bridge length, the expansion joints are to be designed according to the guidelines in a subsequent article [BDM 5.8.3].

For bridge replacements with staged construction the designer needs to check the capacity of the new bridge and the existing bridge to handle staged traffic. Existing bridges with staged construction shall be able to carry all legal loads. Existing beam bridges with only two beams supporting staged traffic are of particular importance especially when the exterior beam is smaller than the interior beam. Rating of the existing bridge shall be based on the requirements in BDM 12.1.7.

5.1.2 Design information

Reserved

5.1.3 Definitions

Reserved

5.1.4 Abbreviations and notation

CCS, continuous concrete slab
CWPG, continuous welded plate girder
PPCB, pretensioned prestressed concrete beam
RSB, rolled steel beam

5.1.5 References

Reserved

TABLE OF CONTENTS ~ DECKS

5.2 Decks
5.2.1 General
5.2.1.1 Policy overview
5.2.1.2 Design information
5.2.1.3 Definitions
5.2.1.4 Abbreviations and notation
5.2.1.5 References
5.2.2 Loads
5.2.2.1 Dead
5.2.2.2 Live
5.2.2.3 Dynamic load allowance
5.2.2.4 Railing
5.2.2.5 Earthquake
5.2.2.6 Construction
5.2.3 Load application
5.2.3.1 Load modifier
5.2.3.2 Limit states
5.2.4 Deck analysis, design, and detailing
5.2.4.1 Traditional decks
5.2.4.1.1 Analysis and design
5.2.4.1.1.1 Analysis assumptions
5.2.4.1.1.2 Materials
5.2.4.1.1.3 Load and resistance factors
5.2.4.1.1.4 Section properties
5.2.4.1.1.5 Moment
5.2.4.1.1.6 Shear
5.2.4.1.1.7 Fatigue
5.2.4.1.1.8 Additional considerations
5.2.4.1.2 Detailing
5.2.4.2 Empirical decks
5.2.4.3 Prestressed deck panels
5.2.4.3.1 Analysis and design
5.2.4.3.1.1 Design criteria
5.2.4.3.1.2 Materials
5.2.4.3.1.3 Additional considerations
5.2.4.3.2 Detailing
5.2.4.4 Two-course decks
5.2.4.4.1 Analysis and design
5.2.4.4.2 Detailing
5.2.4.5 Transparent Stay-In-Place Deck Forms
5.2.4.5.1 Analysis and design
5.2.4.5.1.1 Materials
5.2.4.5.2 Detailing

5.2 Decks

5.2.1 General

With minor modifications, the design procedures described in this article meet AASHTO LRFD Specifications [AASHTO-LRFD Section 9 and Section 13 Appendix A]. In addition to the AASHTO sections listed above, the designer should review related articles in this manual for haunches [BDM 5.3],

pretensioned prestressed concrete beams (PPCB) [BDM 5.4], continuous welded plate girders (CWPG) [BDM 5.5], railings [5.8.1], sidewalks [5.8.2], expansion joints [BDM 5.8.3], and deck drains [BDM 5.8.4].

5.2.1.1 Policy overview

[AASHTO-LRFD 4.6.2.1, 9.7.1.1, 9.7.3, 13.7.3.1.2]

For typical pretensioned prestressed concrete beam (PPCB), continuous welded plate girder (CWPG), and rolled steel beam (RSB) bridges the Bureau requires traditional, single course cast-in-place reinforced concrete decks. Decks shown on standard sheets [BSB SS 4305-4310, 4380-4385, 4556-4561] were designed by the LRFD strip method [AASHTO-LRFD 4.6.2.1, 9.7.3] and, for all non-standard deck designs, the Bureau requires design by the LRFD strip method.

The traditional deck is placed as a single, cast-in-place concrete course 8.50 inches thick, which exceeds the minimum thickness required by the AASHTO LRFD Specifications [AASHTO-LRFD 9.7.1.1]. The deck has two transverse and two longitudinal layers of reinforcing. During construction the bottom transverse layer is placed first, then the bottom longitudinal layer, then the top longitudinal layer, and finally the top transverse layer. Each edge of the deck has a moderate overhang for 18 to 24 inches of roadway surface plus a single slope barrier rail. The top 0.75 inches of the deck is considered a non-structural built-in wearing surface (BWS) that is longitudinally grooved for texture and pavement markings. The weight for a 0.020 ksf future wearing surface (FWS) is included in the design.

The overhang for a typical deck, measured from center of exterior beam or girder to edge of deck, is 37 inches for CWPG bridges and 42 inches for BTB-BTE PPCB bridges. Thickness of the overhang tapers from a permissible range of 10.25 to 11.00 inches at the beam or girder flange to 10.00 inches at edge of deck. These thicknesses exceed the minimum required by the AASHTO specifications [AASHTO-LRFD 13.7.3.1.2].

The bottom of the typical deck is formed with removable formwork between haunches above the beams or girders. For a deck without superelevation, the top of the deck has a central parabolic crown and a 2.0% transverse slope on each side of the crown. Seat elevations for the constant-height beams or girders are varied in the design to create the overall crown in the deck. For the builder's use during construction, the Bureau requires the designer to provide top of deck elevations above each beam or girder at constant 8 to 10 feet intervals on each span.

To minimize deck cracking, the standard specifications require Class C concrete with limited fly ash and ground granulated blast furnace slag substitutions [IDOT SS 2412.02]. In some cases, the Bureau specifies either high performance concrete (HPC) or improved durability concrete (IDC) instead of Class C concrete. The HPC or IDC requires a developmental specification developed by the Construction and Materials Bureau. HPC is available for the regions shown in Figure 5.2.4.1.1.2.

All reinforcing in the deck is required to be epoxy coated, except all barrier rail to bridge deck/wing reinforcement for interstate and primary bridges shall be stainless steel. Alternate corrosion protection for reinforcement requires the approval of the supervising Unit Leader.

Above piers, decks are reinforced for longitudinal negative moment differently depending on the type of superstructure. For pretensioned prestressed concrete beam (PPCB) bridges, extra negative moment bars of specified length are added between the continuous longitudinal top bars. Deck standard sheets have the correct negative moment reinforcing for the span lengths available with standard PPCBs. For typical bridges that make use of the deck standard sheets the designer need not check deck reinforcement, but for greater spans or wider, nonstandard beam spacings the designer shall check the need for additional deck reinforcement and add reinforcement as necessary.

For continuous welded plate girder (CWPG) bridges, the Bureau meets the minimum quantity of negative moment reinforcement required by the AASHTO LRFD Specifications with an amount of longitudinal reinforcing that is continuous over the entire bridge length.

For skews of 7.5 degrees or less the transverse reinforcement is placed parallel with the skew [AASHTO-LRFD 9.7.1.3]. For larger skews the transverse deck reinforcement is placed perpendicular to the longitudinal axis of the bridge. Transverse reinforcement is placed radially for curved bridges.

The Bureau permits the use of stay-in-place, prestressed concrete deck panels for PPCB bridges on rural highways with limited average daily traffic counts. The panels are designed to eliminate formwork and to support deck concrete before it cures. In the completed bridge the panels are composite with the cast-in-place deck.

For all typical PPCB and CWPG bridges the Bureau requires the designer to specify permissible transverse construction joints and a deck placing sequence. The contractor has the option of submitting alternate procedures for placing the deck concrete. In most cases the contractor is given approval to place the deck continuously starting at one end.

The designer should provide a permissible longitudinal construction joint whenever the out-to-out deck width exceeds 80 feet for constant and tapered width bridges. Otherwise, longitudinal construction joints are not required except for staged construction. When a staged longitudinal construction joint is used and the construction takes more than one season, exposed transverse steel reinforcing shall be stainless steel. The exposed transverse stainless steel reinforcing shall generally be lapped with transverse epoxy coated steel reinforcing on each side of the staged longitudinal construction joint.

Longitudinal median joints with a 2-inch gap may be specified when the out-to-out bridge deck width for a single bridge would exceed 120 feet. A longitudinal median joint effectively divides the bridge superstructure into two separate bridges. In most cases, the joint is placed between the backs of two barrier rails which separate head-to-head traffic lanes [BDM 3.2.6.2.1]. Slotted drains may also be incorporated at the joint.

In special cases approved by the Chief Structural Engineer or Bridge Project Development Engineer the Bureau permits use of a two-course deck. Guidelines for design and detailing of the deck are given in another article [BDM 5.2.4.4].

The designer shall include a bridge deck dimensions table on the notes and quantities sheet of each set of bridge plans [CADD Notes E110, BDM 13.3.2]. The table is intended to provide consistent information for analyzing costs.

5.2.1.2 Design information

For typical roadway widths the Bureau provides standard sheets that detail shape, cover, and reinforcement for decks on PPCB and CWPG bridges [BSB SS 4305-4310, 4380-4385, 4556-4561]. The Bureau also provides bar lists that include deck reinforcement for PPCB bridges with integral abutments [BSB SS 4514-4521].

5.2.1.3 Definitions

Longitudinal is the direction associated with the roadway centerline of construction and main girders.

Transverse is the direction normal to the roadway centerline of construction and main girders.

Unit Leader is the supervisor of the Bridges and Structures Bureau preliminary bridge section, Final Design Unit, or Consultant Coordination Unit.

5.2.1.4 Abbreviations and notation

[AASHTO-LRFD 3.3.2, 3.10.4.2]

ADT, average daily traffic

BWS, built-in (sacrificial) wearing surface
CWPG, continuous welded plate girder
d, depth of the deck from compression surface to centroid of tension reinforcing bar
DC, dead load of deck, sidewalk, railings, and nonstructural attachments other than utilities [AASHTO-LRFD 3.3.2]
DW, dead load of future wearing surface and any utilities attached directly to the deck [AASHTO-LRFD 3.3.2]
f'_c, specified 28-day concrete compressive strength
FWS, future wearing surface
GUTS, guaranteed ultimate tensile strength
HPC, high performance concrete
IDC, improved durability concrete
LRFD, load and resistance factor design
PPCB, pretensioned prestressed concrete beam
RSB, rolled steel beam
S_{D1}, horizontal response spectral acceleration coefficient at 1.0-sec. period modified by long-period site factor [AASHTO-LRFD 3.10.4.2]
VPD, vehicles per day

5.2.1.5 References

Bligh, R.P., J.L. Briaud, A. Abu-Odeh, K.M Kim, and D.O. Saez. *Design Guidelines for Test Level 3 through Test Level 5 Roadside Barrier Systems Placed on Mechanically-Stabilized Earth Retaining Walls*. Final Report for NCHRP Project No. 22-20(2), Texas A&M Transportation Institute, College Station, Texas, June 2017. (See Table 3-4 in the report.)
https://nap.nationalacademies.org/download/26580

Grubb, M.A., Wilson, K.E., White, C.D., and Nickas, W.N., NHI Course No. 130081, 130081A, and 130081B: Load and Resistance Factor Design (LRFD) for Highway Bridge Superstructures – Reference Manual. Report No. FHWA-NHI-15-047, FHWA, Washington DC, July 2015.

Hartle, R.A., K.E. Wilson, W.A. Amrhein, S.D. Zang, J.W. Bouscher, and L.E. Volle. *LRFD Design Example for Steel Girder Superstructure Bridge with Commentary.* Moon Township: Michael Baker Jr., Inc., November 2003.

Manual for Assessing Safety Hardware (MASH), 2nd Edition, American Association of State and Highway Transportation Officials (AASHTO), Washington, D.C., 2016.

Modjeski and Masters, Inc. “Lecture 11, Decks and Lecture 17, Overview of Railings, Joints and Bearings.” *FHWA Training Course, LRFD Design of Highway Bridges*. Harrisburg: Modjeski and Masters, Inc., December 1994.

Construction and Materials Bureau. *Construction Manual.* Ames: Construction and Materials Bureau, Iowa Department of Transportation, 2006. (Available on the Internet at: http://www.iowadot.gov/erl/current/CM/Navigation/nav.pdf)

Precast/Prestressed Concrete Institute (PCI). *Bridge Design Manual.* Chicago: PCI, 2011, 3rd edition.

Wassef, W.G., C. Smith, C.M. Clancy, and M.J. Smith. *Comprehensive Design Example for Prestressed Concrete (PSC) Girder Superstructure Bridge with Commentary.* Harrisburg: Modjeski and Masters, Inc., November 2003.

5.2.2 Loads

5.2.2.1 Dead

[AASHTO-LRFD 3.3.2]

For the design of a traditional deck the Bureau does not make a distinction between dead load applied before or after curing of the deck because the future wearing surface is assumed not to act compositely with the deck. All dead load is applied with respect to the same deck cross section for the same span and continuity conditions. However, because of difference in load factor the designer does need to make a distinction between DC, dead load of structural components and nonstructural attachments, and DW, dead load of wearing surfaces and utilities [AASHTO-LRFD 3.3.2].

For two course decks the designer shall consider the second course as DC load because it will be placed under relatively controlled conditions by the bridge contractor.

The transverse strip used in design that spans between beams or girders shall be designed to carry the weight of the deck strip, the future wearing surface of 0.020 ksf on the strip, sidewalks, medians, and any additional dead loads. The transverse strip on the overhang additionally shall be designed for the weight of the barrier rail and other dead loads such as sidewalks or light poles along the edge of the deck. For staged construction the designer shall consider the load of the temporary barrier rail.

5.2.2.2 Live

[AASHTO-LRFD 3.6.1, 3.6.1.3.4, 4.6.2.1, Table A4-1]

For a typical deck the designer shall use the transverse deck strips defined in the AASHTO LRFD specifications [AASHTO-LRFD 4.6.2.1]. The strips shall be designed for HL-93 live load (LL) [AASHTO-LRFD 3.6.1]. Where applicable the designer may use the tabulated live load moments [AASHTO-LRFD Table A4-1].

When the overhang length exceeds the Bureau's preferred maximum of about 3.50 feet the designer will need to consider wheel loads on the overhang. The designer shall not use the optional uniformly distributed live load of 1.0 k/ft [AASHTO LRFD 3.6.1.3.4]. Overhang lengths greater than the preferred maximum shall be approved by the supervising Unit Leader.

5.2.2.3 Dynamic load allowance

[AASHTO-LRFD 3.6.2]

The dynamic load allowance (IM) shall be taken from the AASHTO LRFD Specifications [AASHTO-LRFD 3.6.2].

5.2.2.4 Railing

[AASHTO-LRFD A13]

Railing loads for design of the deck overhang shall be in accordance with the AASHTO LRFD Specifications [AASHTO-LRFD A13] and the policy for determining test levels for railings on interstate and primary highways [BDM 5.8.1.2.1]. The design values for traffic railings found in Table A13.2-1 of the AASHTO LRFD Specifications, 9th edition, are based on NCHRP 350 requirements, not MASH requirements. Until AASHTO publishes design values based on MASH requirements, the design values listed in Table 5.2.2.4-1 shall be used in traffic barriers for MASH TL-4 and TL-5 [Bligh]. Iowa has approved the use of 38-inch tall TL-4 and 44-inch tall TL-5 MASH single slope barrier rails. These rails will be used on most new highway bridges. The height of the rails was set 2 inches above the minimum MASH test level height requirement to account for the possibility of up to a 2-inch thick future deck overlay. New decks using TL-4 and TL-5 single slope rails shall be designed to meet the requirements of TL-4-2 and TL-5-2, respectively, in Table 5.2.2.4-1 based on the rail height limits shown in the table.

Table 5.2.2.4-1. Recommended design impact loads in traffic barriers for MASH TL-4 and TL-5 impact

Design Forces and Designations	TL-4-1	TL-4-2	TL-5-1	TL-5-2
Rail Height, H (inches)	36	> 36	42	> 42
F_t, Transverse (kips)	70	80	160	260
F_L, Longitudinal (kips)	22	27	75	75
F_v, Vertical (kips)	38	33	160	108
L_t and L_L (ft)	4	5	10	10
L_v (in)	18	18	40	40
H_e (in)(1)	25	30	34	43(2)

Table Notes:

(1) Vertical height of the resultant load.

(2) If barriers taller than 54 inches are used, use H_e = 52 inches

(3) Definition of variables:

F_t = Transverse force applied perpendicular to the barrier
F_L = Longitudinal force applied by friction along barrier's direction
F_v = Vertical force applied downward on the top of the barrier
L_t = Length of the transverse force
L_L = Length of the longitudinal force
H_e = Height of the peak force from ground level
L_v = Length of the vertical distributed design load

Except in the case of unusual design criteria, design forces for traffic railings shall be taken at Test Level Four or Five (TL-4 or TL-5). For the standard TL-4 and TL-5 single slope barrier rails the designer shall use the yield line values in Table 5.2.2.4-2.

Table 5.2.2.4-2. Yield line values for MASH single slope barrier rails(1)

Rail rating and condition	R_w kips	L_c feet	$M_{c\text{-}base}$ ft-k
TL-4-2, interior	131.2	12.4	22.41
TL-4-2, end	89.0	6.4	22.41
TL-5-2, interior	282.1	16.7	29.73
TL-5-2, end	269.2	10.9	44.12

Table Notes:

(1) Definition of variables:

R_w = Total transverse resistance of the railing
L_c = Critical length of yield line failure pattern
$M_{c\text{-}base}$ = Flexural resistance of the rail at its base about an axis parallel to the longitudinal axis of the bridge. This value is used for the deck overhang design.

For other railing types and for TL-6 ratings the designer shall determine the yield line values in accordance with the AASHTO LRFD Specifications.

The railing load applied to the deck is intended to make the deck stronger than the railing so that an overload will cause collapse of the rail but not of the deck [AASHTO-LRFD CA13.3.1, CA13.4.2]. Therefore, the designer should be cautious about strengthening the barrier rail to avoid requiring additional reinforcement for the deck overhang.

For an overhang of typical length, the design case with the horizontal railing load usually governs, and the width of deck that is effective for the railing load will vary with distance from the railing. The designer may apply tension force and moment to the deck overhang with a 30-degree load spread [Grubb].

5.2.2.5 Earthquake

[AASHTO-LRFD 3.10.3.1, 3.10.4.2, 3.10.6, 4.7.4.1]

Based on the acceleration coefficient S_{D1}, all of Iowa with Site Class A through E shall be classified as Seismic Zone 1 [AASHTO-LRFD 3.10.3.1, 3.10.4.2, 3.10.6]. Thus, for typical bridges no seismic loading (EQ) or analysis involving the deck is required [AASHTO-LRFD 4.7.4.1]. However, for unusual projects such as bridge sites determined to be Site Class F and for Missouri River and Mississippi River bridges the designer shall determine the seismic zone and perform seismic analysis as required by the AASHTO LRFD Specifications.

5.2.2.6 Construction

For most bridge projects it is assumed that construction can take place without cranes, construction vehicles, construction equipment, and concentrated quantities of construction materials on the deck. If, however, the contractor does need to place loads on the deck larger than those permitted by the Standard Specifications [IDOT SS 1105.12, D], the contractor will be required to submit structural analysis by an Iowa-licensed engineer for approval. Thus, the bridge designer may be required to review construction loading after letting of the bridge contract.

5.2.3 Load application

5.2.3.1 Load modifier

[AASHTO-LRFD 1.3.2, 3.4.1]

Load factors shall be adjusted by the load modifier, which accounts for ductility, redundancy, and operational importance [AASHTO-LRFD 1.3.2, 3.4.1]. For typical decks the load modifier shall be taken as 1.0.

5.2.3.2 Limit states

[AASHTO-LRFD 5.6.7, A13.4]

For the typical PPCB, CWPG, or RSB reinforced concrete bridge deck, the designer shall consider the Strength I limit state for the portion of the deck spanning between beams or girders. Other limit states may apply in the unusual case when the deck is specially designed to function as a horizontal stiffening component in the completed bridge structure.

For the deck overhang the designer shall consider the three design cases defined in the AASHTO LRFD Specifications [AASHTO-LRFD A13.4].

Because the crack control rules in the 2005 Interim [AASHTO-LRFD 5.7.3.4; AASHTO-LRFD 5.6.7 beginning with the 2017 8th Edition] are more stringent for decks than previous rules and because the previous Z-check rules have resulted in good deck performance, the Bureau requires that the designer meet the Z-check rules in the AASHTO LRFD Specifications prior to 2005. Severe exposure conditions for the Z-check rules shall be assumed for decks. The Z-check rules typically control the transverse reinforcement requirements for the interior portions of the deck design.

5.2.4 Deck analysis, design, and detailing

5.2.4.1 Traditional decks

This series of articles covers the design of the traditional, single course cast-in-place reinforced concrete deck used on most PPCB, CWPG, and RSB bridges.

5.2.4.1.1 Analysis and design

[AASHTO-LRFD 4.6.2.1, Table A4-1, 5.6.3, 9.7.3, A13.4]

The load and resistance factor design method shall be used for the deck spanning between beams or girders and for the deck overhang. For design of typical decks, the designer shall use the strip method [AASHTO-LRFD 4.6.2.1, Table A4-1, 9.7.3, 5.6.3] between beams and girders and Design Cases 1 through 3 for the overhang [AASHTO-LRFD A13.4].

The Bureau prefers that the deck overhang length be a maximum of about 3.50 feet.

5.2.4.1.1.1 Analysis assumptions

For design by the equivalent strip method, the transverse strip shall be considered a continuous member supported at each beam or girder. In the case of staged construction or other conditions that require a closure pour or longitudinal construction joint the designer shall consider the deck span conditions at the various stages of deck placement.

5.2.4.1.1.2 Materials

Unless otherwise specified, concrete for the deck shall be structural concrete of the Class C mixes listed in the standard specifications [IDOT SS 2412.02]. Class C concrete shall be assumed to have a 28-day strength of 4.0 ksi.

If requested by the District and approved by the Bridge Project Development Engineer high performance concrete (HPC) will be specified for the deck and other bridge components, and the designer shall consult the developmental specification prepared by the Construction and Materials Bureau for the 28-day concrete strength, IDOT Developmental Specification for High Performance Concrete for Structures. HPC is available for the regions shown in Figure 5.2.4.1.1.2.

Some of the longer standard PPCB BT beams (i.e. BTC115, BTC120, BTE150, BTE155) require the deck to have a 28-day concrete strength of 4.5 ksi. Bid item 2403-0100030 shall be used for the deck concrete when the deck concrete is 4.5 ksi or greater regardless of whether Class C or HPC is specified. When the deck concrete is 4.5 ksi or greater reference “Developmental Specifications for Structural Concrete (4500 psi or Greater)” in CADD Note E50E. If HPC is also specified, then reference the Developmental Specification for HPC by title, “Developmental Specifications for High Performance Concrete for Structures”, in the bid item reference note for bid item 2403-0100030.

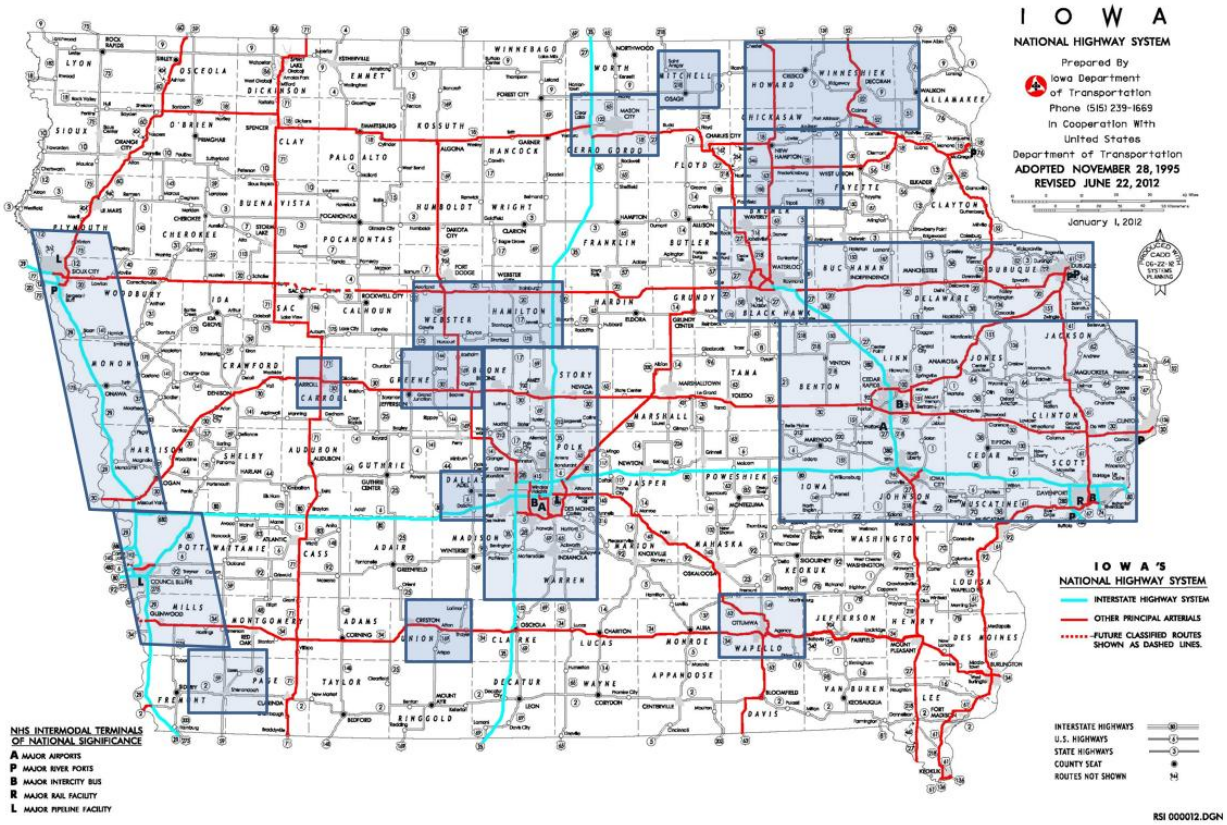

Figure note:

- Shaded areas indicate regions in which HPC is available.

Figure 5.2.4.1.1.2. HPC Availability Map

In 2019 the Department used macro and micro polypropylene fibers in bridge deck concrete for a project on I-80/I-35 over the Des Moines River. Since then, several more projects have used fibers in both Class C and HPC decks to limit early age deck cracking and thereby increase deck durability. Starting with the October 2025 letting all new Class C and HPC concrete decks shall include fibers. See BDM 5.2.4.1.2 for additional details of how to specify fibers. In 2025 the Department began to specify only macro polypropylene fibers.

If requested by District 3 and approved by the Bridge Project Development Engineer improved durability concrete (IDC) will be specified for the deck and related bridge components. The IDC concrete will have the same strength as Class C concrete. For further information the designer shall consult the developmental specification prepared by the Construction and Materials Bureau, IDOT Developmental Specification for Improved Durability Concrete for Bridge Decks.

Unless otherwise specified, reinforcement shall be ASTM A 615/A 615M, ASTM A 996/A 996M, or ASTM A 706/A 706M Grade 60. All deck reinforcement shall be epoxy coated or otherwise corrosion protected. All barrier rail to bridge deck/wing reinforcement for interstate and primary bridges shall be stainless steel. The Iowa DOT Construction and Materials Bureau Instructional Memorandum “Deformed and Plain Stainless Steel Bars for Concrete Reinforcement” [OM IM 452] contains information on the type and grade requirements for stainless steel bars. Alternate corrosion protection requires approval of the supervising Unit Leader.

5.2.4.1.1.3 Load and resistance factors

[AASHTO-LRFD 3.4.1, 5.5.4.2]

Load and resistance factors for the deck shall be taken from the AASHTO LRFD Specifications [AASHTO-LRFD 3.4.1, 5.5.4.2].

5.2.4.1.1.4 Section properties

For computation of all structural properties the uppermost 0.75 inch built-in wearing surface (BWS) shall be neglected.

For the transverse spans between beams or girders the designer shall assume the deck to be singly reinforced. Compression reinforcement shall be neglected.

For design of the deck overhang for horizontal railing loads, the designer shall consider both top and bottom reinforcement.

5.2.4.1.1.5 Moment

[AASHTO-LRFD Table A4-1, 5.6.3]

Dead load moments for the transverse design strip shall be determined by elastic analysis of the strip for the applicable span and support conditions.

If the deck span and superstructure configuration meet the assumptions of the tabulated live load moments in the AASHTO LRFD Specifications, the designer may use the moments for the deck strip between beams or girders [AASHTO-LRFD Table A4-1]. Live load moments for the overhang need to be computed directly from structural principles.
The designer shall meet LRFD flexural design requirements [AASHTO-LRFD 5.6.3].

5.2.4.1.1.6 Shear

[AASHTO-LRFD 9.7.1.5]

For nonstandard designs the designer shall investigate punching shear effects at the outside toe of a barrier railing or railing post [AASHTO-LRFD 9.7.1.5].

5.2.4.1.1.7 Fatigue

[AASHTO-LRFD 9.5.3]

For the typical reinforced concrete deck, the designer need not investigate fatigue [AASHTO-LRFD 9.5.3].

The longitudinal reinforcing steel above piers typically will not require a fatigue check for bridges with a traditional deck. PPCB bridges are designed for simple span conditions with addition of the reinforcing above piers primarily to control cracking [BDM Table 5.4.1.4.1.1]. For CWPG bridges, the deck in a negative moment region at a pier is not considered part of the structural cross section, and thus the longitudinal reinforcing need not be designed for fatigue [BDM Table 5.5.2.4.1.4].

5.2.4.1.1.8 Additional considerations

[AASHTO-LRFD 5.10.6, 9.7.3.2]

For a typical deck the transverse top and bottom reinforcement size and spacing should be the same and should be selected for the greatest of the design moments between beams or girders and arranged so that the top bars are staggered with respect to the bottom bars. The bottom transverse reinforcement shall extend to each edge of the deck minus the 2-inch concrete cover provided at each edge. The top transverse reinforcement shall extend into the exterior beam bays on each side of the deck and shall lap with short j-bars in the deck overhang. The j-bars will be closely spaced in the deck overhangs to provide the additional strength required by railing loads [BSB SS 4305-4310, 4380-4385, 4556-4561]. To meet

noncontact lap splice spacing requirements, the j-bars and top transverse reinforcement shall not be spaced farther apart transversely than the lesser of one-fifth the required lap splice length or 6-inches [AASHTO-LRFD 5.10.8.4.2a]. The ends of the j-bars at the edges of the deck shall be hooked to meet tension development length requirements. To avoid reinforcing congestion and allow adequate concrete cover for the hooks, the j-bars shall be limited to the #6 size. In all cases the reinforcing shall meet the requirements for shrinkage and temperature [AASHTO-LRFD 5.10.6]

For a typical deck in the longitudinal direction, the bottom reinforcement shall be designed to meet the greater of the requirements for distribution [AASHTO-LRFD 9.7.3.2], crack control based on computed service load stress at the severe exposure condition [AASHTO-LRFD pre-2005 5.7.3.4], and shrinkage and temperature. Typically, the top longitudinal reinforcement should be the same bar size and spacing as the bottom reinforcement but arranged so that the top bars are staggered with respect to the bottom bars. The longitudinal reinforcement also needs to be designed with respect to negative moment in beams or girders as indicated below.

As shown on standard sheets for PPCB bridge decks [BSB SS 4380-4385, 4556-4561], additional longitudinal b2 bars of specified length are added between continuous b1 bars to control cracking caused by negative moments above the piers. The deck standard sheets have the correct negative moment reinforcing for the span lengths available with standard PPCBs. Per BDM 5.8.5.3 when 60 ksi No. 9 bars are required in the top and bottom of the deck in the negative moment region the designer has the option to substitute 80 ksi No. 8 bars to reduce congestion. For typical bridges that make use of the deck standard sheets the designer need not check deck reinforcement, but for greater spans or wider, nonstandard beam spacings the designer shall check the need for additional deck reinforcement and add reinforcement as necessary. The additional bars should be designed using the appropriate AASHTO design method [BDM 5.4.1.4.1.7].

For CWPG bridge decks the AASHTO LRFD Specifications require minimum longitudinal reinforcement in negative moment regions, and the Bureau follows the requirement but not the top to bottom proportion [BDM 5.5.1.4.1.5]. The b1 bars determined for negative moment regions, for distribution, and for shrinkage and temperature are continuous throughout the bridge deck, without change from negative to positive moment regions [BSB SS 4305-4310].

5.2.4.1.2 Detailing

For standard roadways without superelevation the profile of the top of the deck shall be as shown on standard sheets [BSB SS 4305-4310, 4380-4385, 4556-4561]. The typical profile consists of a central parabolic crown and side tangent slopes of 2.0%. The profile of the bottom of the deck consists of straight lines between the haunches above each set of two beams or girders.

To aid the contractor in setting the top of deck elevations, the elevations shall be shown on the plans at intervals of 8 to 10 feet along each span. For decks on PPCBs, intervals shall be set with an even number of spaces between abutment and pier bearings and between pier bearings so there will be elevations at the centerlines of all spans and at all bearings. For decks on CWPGs, intervals should be set among abutment bearings, splice points, and pier bearings so there will be elevations at all bearings and splice points.

For PPCB or CWPG bridges without super-elevation, top of deck elevations in the transverse direction are to be shown at centerline of approach roadway, at all beam lines, at each gutter line, and at the longitudinal construction joint, if required for staged construction.

On super-elevated decks, the centerline of approach roadway, the edge of deck, the gutter line, and all beam line elevations are to be shown on the plans. If a longitudinal construction joint is required for staged construction, elevations also are to be shown at the joint.

In addition, the profile grade line should be located and identified on the “Top of Deck Elevation” sheet, however no elevations should be provided.

Generally, deck replacement projects that do not involve widening or other alterations to the superstructure configuration of a bridge do not require a situation plan (or TS&L) prepared by the Preliminary Bridge Design Unit. Therefore, a Final Design Unit will be responsible for the typical bridge deck replacement project. To properly specify deck elevations on the plans for a deck replacement, the final designer shall request a survey of the existing deck. A bridge occasionally will settle several inches during years of service and, without the survey, elevations for the new deck will not be accurate for the intended deck thickness. Bridge widening projects will ordinarily require a TS&L and should already include survey of the existing deck. If survey is not available or is incomplete, the final designer shall request survey as needed to ensure the existing structure and new construction will meet up. CADD Note E101 shall be included on deck replacement and bridge widening projects. Per BDM 1.8.2.1, a Construction Survey, Location Survey bid item shall also be included in the project plans for deck replacements projects with or without widening.

All bridge decks shall have longitudinal grooving, and the designer shall include the appropriate plan note [BDM 13.3]. The limits for estimating the bridge deck longitudinal grooving area quantity shall be 18 inches inside the gutter lines and 6 inches from bridge joints [IDOT SS 2412.03, D, 4]. Longitudinal grooving replaces transverse tining as a preferred method of surface finish on primary and interstate projects.

Based on the contract package the designer shall provide for longitudinal grooving as follows:

- Case I: A new bridge will not be opened to traffic until additional contracts have been completed, which will then allow traffic access to the structure.

  The designer shall calculate the quantities of longitudinal grooving required for the bridge deck and for the bridge approach sections, if applicable, and forward the information to the Design Bureau. The appropriate CADD Note, E205 or E206 [BDM 13.3.2] shall be included in the bridge plans.

- Case II: A new bridge will be opened to traffic upon completion of the bridge contract.

  The designer shall calculate the quantity of longitudinal grooving required for the bridge deck only and forward the information to the Design Bureau. The Design Bureau will provide the longitudinal grooving bid tab and appropriate bid items in their sheets for inclusion in the bridge project.

- Case III: An existing bridge requires redecking or overlay.

  The designer shall calculate the quantity of longitudinal grooving required for the bridge deck only and forward the information to the Design Bureau. The Design Bureau will provide the longitudinal grooving tab and appropriate bid items in their sheets for inclusion in the bridge project.

For bridge decks that are constructed with high performance concrete (HPC) or improved durability concrete (IDC) the designer shall do the following:

- Reference on the plans the appropriate IDOT Developmental Specification for High Performance Concrete for Structures or Improved Durability Concrete for Bridge Decks,
- Show a separate quantity for HPC or IDC and a separate quantity for structural concrete in the concrete placement quantities table and
- On the plans designate the deck, abutment diaphragms, pier diaphragms, and wing walls as HPC or IDC.
- Intermediate concrete diaphragms are no longer specified for new structures (only intermediate steel diaphragms will be specified), but if used they should also be designated as HPC or IDC. In such cases, the contractor has the option of using Class C concrete for any concrete intermediate diaphragms if they are placed separate from the deck.

- Abutment footing, wings, and paving blocks shall be Class C concrete.

Starting with the October 2025 letting all Class C and HPC concrete bridge decks shall be constructed with polypropylene fibers in the concrete deck mix according to the following:

- Reference Developmental Specifications for Fiber Reinforcement for Structural Concrete [DS-23076] on the plans.
- Include 2403-1000005 bid item quantity in CY for Fiber Reinforcement for Structural Concrete.
- Include 2403-1000010 bid item quantity as LS for Trial Batch and Test Placement (Fiber Reinforced Concrete).
- The Bid Item Reference Notes and “Summary of Quantities” plan sheet shall clearly indicate where fiber is being used.

The designer need not address additional 0.08-inch deep longitudinal grooving for pavement markings.

Cover shall be 2.75 inches for top steel and 1.5 inches for bottom steel. In other cases, cover for deck reinforcing shall be 2 inches.

Minimum practical spacing for main bars is 4½ inches, but tighter spacing over limited areas may be necessary. Maximum bar size for deck reinforcing shall be #9.

For transverse bars, lap splices are at the option of the contractor for bars no longer than 60 feet. For bars longer than 60 feet the designer shall indicate splice details on the plans. Lap splices for transverse bars shall ordinarily be Class B. In most cases, for longitudinal bars the designer should indicate lap splice details on the plans at intervals no longer than 40 feet. Lap splices for longitudinal bars shall ordinarily be Class B. Due to the limited space in a typical deck, the designer shall not ordinarily use mechanical bar splices.

Table 5.2.4.1.2-1 summarizes the general deck reinforcement requirements for the 8.50-inch thick decks on the standard sheets. J-bars are placed in the top of the deck for deck overhangs with the spacing shown on standard sheets when a TL-4 single slope rail is used. The recommended j-bar design for standard deck overhang widths for TL-4 and TL-5 single slope barriers is summarized in Table 5.2.4.1.2-2 for interior and end regions. The j-bars shall be limited to the #6 size to allow room for the hooks.

Table 5.2.4.1.2-1. Deck reinforcement for beam bridges: 8.50-inch thick deck, standard deck widths and standard beam spacings

Beam type(1)	Rdwy width (feet)	No. of beams and beam spacing (feet)	Standard sheets	Top and bot. transv. bar size & spacing (inches)	Top transv. j-bar size and spacing (inches) for MASH TL-4-2 SS Rail(3)	Top and bot. longitudinal bar size & spacing (inches)(5)
Steel	30	4 -- 9.000	4305	No. 7 at 10.50	No. 6 at 4.50	No. 6 at 10.00
Steel	40	5 -- 9.250	4308, 4310	No. 7 at 10.25	No. 6 at 4.50	No. 6 at 10.00
Steel	44	5 -- 10.250	4309	No. 7 at 8.75	No. 6 at 4.50	No. 6 at 9.50
PPCB BT, BTB, BTC, BTD, BTE	30	4 -- 8.724	4380-BTB-4, BTC-4, BTD-4, BTE-4; 4556-BTC-4, BTD-4, BTE-4	No. 6 at 10.25	No. 6 at 4.50	No. 5 at 10.25
PPCB BT, BTB, BTE	30	5 -- 6.542	4380-BTB-5, BTE-5; 4556-BTE-5	No. 6 at 11.50	No. 6 at 4.50	No. 5 at 11.00
PPCB BT, BTB(4), BTC, BTD, BTE	40(2)	5 -- 9.042	4383-BTB-5, BTC-5, BTD-5, BTE-5; 4385-BTB-5, BTC-5, BTD-5, BTE-5; 4559-BTC-5, BTD-5, BTE-5; 4561-BTC-5, BTD-5, BTE-5	No. 6 at 10.00	No. 6 at 4.50	No. 5 at 10.50
PPCB BT, BTB(4), BTC, BTE	40(2)	6 -- 7.234	4383-BTB-6, BTC-6, BTE-6;	No. 6 at 11.50	No. 6 at 4.50	No. 5 at 10.75

Beam type(1)	Rdwy width (feet)	No. of beams and beam spacing (feet)	Standard sheets	Top and bot. transv. bar size & spacing (inches)	Top transv. j-bar size and spacing (inches) for MASH TL-4-2 SS Rail(3)	Top and bot. longitudinal bar size & spacing (inches)(5)
			4385-BTB-6, BTC-6, BTE-6; 4559-BTC-6, BTE-6; 4561-BTC-6, BTE-6			
PPCB BT, BTB(4), BTC, BTD, BTE	44	6 -- 8.031	4384-BTB-6, BTC-6, BTD-6, BTE-6; 4560-BTC-6, BTD-6, BTE-6;	No. 6 at 11.00	No. 6 at 4.50	No. 5 at 11.50
PPCB BT, BTB	44	7 -- 6.693	4384-BTB-7	No. 6 at 11.50	No. 6 at 4.50	No. 5 at 12.00

Table note:

(1) Similar, but separate deck details exist for PPCBs with integral and stub abutments. The BTB beams only include deck details for integral abutments. The steel beams only include deck details for stub abutments. Deck designs are based on a 28-day deck concrete strength of 4.0 ksi. As indicated on the PPCB BT standard sheets, some of the longer PPCB BTs require a 28-day deck concrete strength of 4.5 ksi. The design section for negative moments is designed according to AASHTO LRFD 4.6.2.1.6 and is different for steel beams and PPCBs.

(2) The deck details for the 40 feet wide roadway width includes the standard sheets for symmetrical and unsymmetrical cross-sections.

(3) The hooked top transverse j-bar deck overhang reinforcement laps with the partial width interior top transverse deck reinforcement in the beam bay between the exterior beam and adjacent interior beam. The j-bar size and spacing in the table is based on the design requirements for Iowa's standard MASH TL-4 single slope rail. Iowa's standard MASH TL-5 single slope rail requires additional reinforcement. Other approved rails may have different reinforcement requirements.

(4) The BTB beams only include deck details for integral abutments.

(5) Additional longitudinal bars placed over the piers for span continuity is not considered. See standard sheets for additional details and for longitudinal bar spacing in the deck overhangs.

Table 5.2.4.1.2-2. J-bar size and spacing for deck overhangs with MASH TL-4 and TL-5 single slope rails(1), (2)

Limits of Application	TL-4-2 Interior Region	TL-4-2 End Region(3)	TL-5-2 Interior Region	TL-5-2 End Region(3)
3'-1" to 3'-6" deck overhang dimension for BTB to BTE beams and steel beams	No. 6 at 4.50 inches	No. 6 at 4.50 inches for 8.00 feet	No. 6 at 4.50 inches	No. 6 at 3.00 inches for 12.25 feet

Table Notes:

(1) J-bar design based on yield line values from BDM Table 5.2.2.4-2.

(2) CADD standard sheets for deck details include j-bars in the deck overhang based on MASH TL-4-2 single slope rails. When using MASH TL-5-2 single slope rails or other approved rails the j-bar design details need to be updated.

(3) The total length needed for the j-bar spacing at an end region is based on the critical length, L_c, from BDM Table 5.2.2.4-2 with a 30 degree spread on the overhang. An end region typically originates at a discontinuity in both the deck and rail as may occur at a deck expansion joint. Per BDM 5.8.5.3 the j-bar size and spacing for the TL-5-2 end region may substitute 80 ksi No. 6 bars at 4.00-in spacing for the 60 ksi No. 6 bars at 3.00-in spacing shown in the table to reduce congestion.

All deck and barrier bars shall be epoxy coated, except all barrier rail to bridge deck/wing reinforcement for interstate and primary bridges shall be stainless steel.

Bridges having more than one span shall have permissible transverse construction joints in the deck, which are located near the dead load inflection points. However, for decks on pretensioned prestressed concrete beams, locate the transverse construction joints at one-eighth of the interior span away from the centerline of the pier, on either side of the pier. The joints are to be configured as specified in Table 5.2.4.1.2-3.

Table 5.2.4.1.2-3. Transverse construction joints for PPCB and CWPG superstructures

Skew	Direction of Transverse Reinforcement	Configuration of Transverse Joints	Keyway, actual size (1)
7.5 degrees or less	Parallel with skew	Parallel with skew but perpendicular to longitudinal centerline below barrier rails	Beveled 1 1/2 inches x 3 inches
More than 7.5 degrees to 30 degrees	Perpendicular to longitudinal centerline	Parallel with skew but perpendicular to longitudinal centerline below barrier rails	Beveled 1 1/2 inches x 3 inches
More than 30 degrees	Perpendicular to longitudinal centerline	Stepped; parallel with skew alternate, Figure 5.2.4.1.2-1	Beveled 1 1/2 inches x 3 inches along entire joint

Table note:

(1) See CADD Note E443 [BDM 13.5.2].

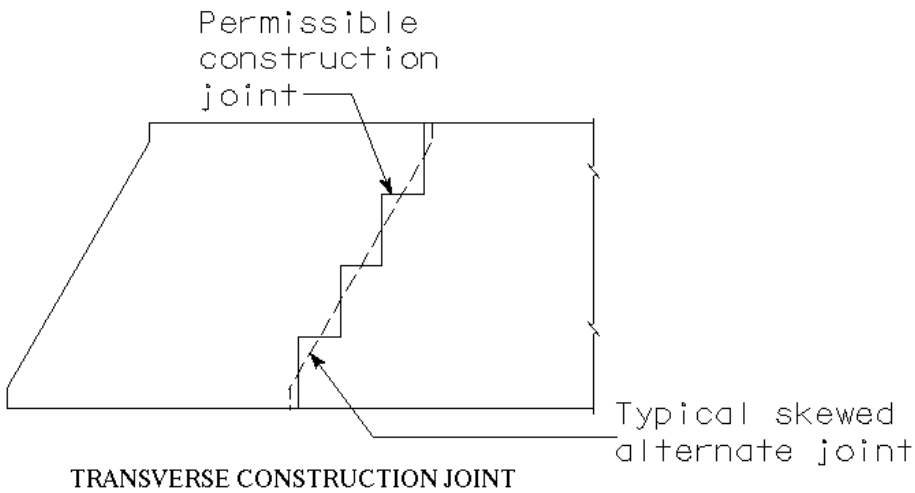

Figure 5.2.4.1.2-1. Stepped transverse construction joint

Transverse construction joints define the limits of sections of deck in a placing sequence. The Bureau requires the designer to indicate a deck placement sequence on the plans for all multi-span beam or girder bridges. Bridge plans should always provide a baseline section and sequence concrete pour diagram [BDM C5.2.4.1.2].

For PPCB bridges the pour sequence starts with the first positive moment region at an abutment, progresses through all the positive moment regions in the deck, and then starts over to complete the negative moment regions [BDM 13.10.2 E926, SS 4514-4521, 4549-4552].

For CWPG bridges with stub abutments the pour sequence starts with the first positive moment region of span 1 at the stub abutment and progresses through all of the positive moment regions in the deck as follows: skip the positive moment region in span 2, pour the positive moment region is span 3 and continue the pattern as needed; and then return back to pour the positive moment region in span 2 followed by any remaining positive moment regions span by span. Once the positive moment regions are complete, the negative moment regions are poured sequentially starting with the pier 1 region. Alternating positive moment regions helps to limit concrete cracks from forming in the top of the deck as does pouring negative moment regions last. CWPG bridges with integral abutments are similar except regions near integral abutments to the one-tenth point of the span or termination of the abutment bars extending into the deck, whichever is greater, are omitted from the positive moment regions and are completed in sequence with the negative moment regions [BDM 13.10.2 E1040A]. For two-span CWPG bridges with relatively equal spans both positive moment regions in spans 1 and 2 must remain plastic until both regions are poured to prevent deck cracking in those regions [BDM 13.10.2 E1040B]. Additionally, for two-span CWPG bridges with one span significantly longer than the other, the deck in the positive moment region on the shorter span must be placed first to prevent uplift [BDM 13.10.2 E1040C].

For a single span welded plate girder bridge with integral abutments, the placing sequence will be like the sequence for a two-span bridge. The positive moment region shall be placed first, and regions near the integral abutments to the one-tenth point of the span or termination of the abutment bars extending into the deck, whichever is greater, shall be placed second. The designer shall include on the plans a note like the note for two-span bridges [BDM 13.10.2 E1040B].

Concrete placement diagram notes shall require a minimum 2 day waiting period and a requirement that the previous pour must achieve 75% of its 28-day concrete strength before removing a header and beginning an adjacent deck pour.
Most contractors can place up to 500 CY of deck concrete in one continuous pour while maintaining plasticity of the concrete. In addition to a baseline section and sequence concrete pour diagram, PPCB and CWPG Bridges with a total volume of deck concrete no greater than 500 CY should ordinarily permit an option to place the deck in one pour beginning at one end of the bridge in the concrete placement diagram notes so long as the plasticity of the concrete is maintained and there are no structural or constructability concerns. If a bridge is within the 500 CY concrete deck volume limit, but the designer determines an end-to-end deck pour is not viable then the concrete placement diagram notes shall specifically exclude the option to ensure the contractor does not assume it will be permitted. The note shall explicitly state why an end-to-end pour is prohibited.

Bridges with a total volume of deck concrete greater than 500 CY should not explicitly include or explicitly exclude an end-to-end pour within the plan note. In addition to a baseline section and sequence concrete pour diagram, the designer shall analyze the structure for a series of sequential pours starting at one abutment and ending at the other. The pours should generally be sized between 300 to 500 CY and should stop at planned deck construction joint locations located at the end of positive moment regions to limit the possibility of deck cracking in the negative moment regions. The analysis should assume that the previous pour has set and started to gain strength, prior to initiation of the next pour. Contractors should generally have the option to propose alternate sequences and an end-to-end pour option.

Restricting the pour sequence note may be necessary when any of the following apply:

- Alternate sequences could subject end span(s) to potential uplift.
- Alternate sequences could subject girders to stress conditions that are not acceptable (or not previously analyzed). Ordinarily, the designer should size steel girders, particularly top flanges, such that girder stresses are not exceeded for probable alternate deck pours that may be proposed by the contractor. (At a minimum the designer must verify the design for the pours allowed by plan note.)
- Alternate sequences require modifications to beam camber, deflection, and haunching.
- Curved structures with variable width and/or discontinuous beam lines.

In such cases the designer should modify the pour sequence note to specifically indicate why alternate pour sequences are not permitted. Doing so helps to ensure the contractor does not assume alternate procedures will be permitted.

Alternate deck pour sequences submitted by the contractor shall be reviewed by the bridge engineer. The cost of any additional analysis and any plan modifications shall be paid for by the contractor.

The designer shall provide a longitudinal construction joint near the centerline of the bridge whenever staged construction is required, and any bars or dowels that will be exposed, for more than one construction season, before the second stage is constructed shall be stainless steel or otherwise protected by a method approved by the supervising Unit Leader. Epoxy coatings have a very limited lifetime when exposed to the weather and thus are not acceptable for bars or dowels exposed for more than a few weeks. The exposed transverse stainless steel reinforcing shall generally be lapped with transverse epoxy coated steel reinforcing on each side of the staged longitudinal construction joint.

The designer also should provide a permissible longitudinal construction joint whenever the out-to-out deck width exceeds 80 feet for constant and tapered width bridges. If the roadway is tapered the construction joint should be aligned to provide one constant width and one tapered longitudinal section. For a permissible construction joint the designer should note on the plans that the contractor has the option to propose a construction sequence that eliminates the joint. In all cases the construction joint should be considered along with a closure pour, which is discussed below.

If only a construction joint is necessary, it should be located between the 0.2 and 0.3 points of the deck span between beam or girder flanges as shown in Figure 5.2.4.1.2-2 and placed to miss the longitudinal reinforcement. Preferably the joint also should be 5 feet from the centerline of the bridge to miss the parabolic deck crown. If spliced, transverse reinforcing bars should be spliced at points of minimum stress. If space is limited with staged construction, the splice for top and bottom bars may be placed near the longitudinal construction joint.

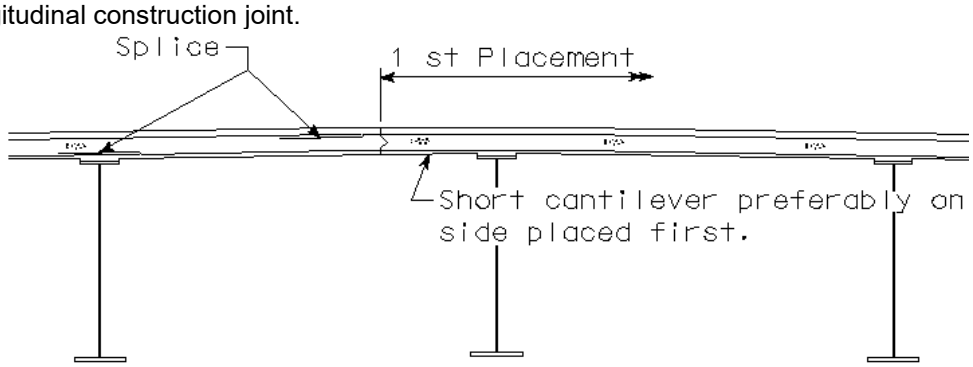

LONGITUDINAL CONSTRUCTION JOINT

Figure note:

- Bars or dowels exposed during two season staged construction shall be stainless steel or otherwise protected by a means approved by the supervising Unit Leader.

Figure 5.2.4.1.2-2. Location of longitudinal construction joint

A closure pour should be considered at a longitudinal construction joint, on a case-by-case basis, if either of the following conditions applies.

- The bridge deck will deflect more than 2 inches under dead load.
- The staged bridge construction is on a highway with a high volume of truck traffic (approximately 500 trucks per day or more).

BSB has received field reports of deck cross-slope irregularities for some bridges involving staged construction and closure pours. The deck cross-slope irregularities have been most prominent near span centers across the width of the closure pour. To help remediate issues, designers should determine beam deflections for individual beam lines when the tributary deck width to each beam varies significantly among the beam lines during the deck pour. Beams adjacent to closure pours are most likely to carry a reduced tributary deck width. Haunch thickness and beam line haunch elevations for each beam shall

accommodate the differences in deflection. It is also important to note that closure pours do not typically generate much additional beam deflection since the beams on either side of the closure pour already act compositely with the deck that was poured in previous stages. Beam lines adjacent to a closure pour with reduced tributary weight shall specifically state in a plan note that deflections are based on tributary deck width without any closure pour weight included so that field personnel are aware that no adjustment to deflections is required.

Bridge deflection due to temporary barrier rail (TBR) in closure pour situations should be considered if the location of the TBR is near the beam line adjacent to the closure pour. In these situations, the designer should investigate the possibility of moving the TBR before the closure pour is performed.

A closure pour should be placed where the transverse slope of the deck is constant and should not be placed above a beam or girder. If possible, the closure pour should be placed away from final vehicle wheel path locations on the completed structure in order to minimize the impact on smoothness at wheel path locations. The closure pour shall be a minimum of 4 feet wide and shall be wide enough to allow splicing of the transverse bars with at least 2 inches of clearance between the ends of the bars and the construction joint.

The Bureau no longer specifies intermediate concrete diaphragms for PPCB bridges (only steel intermediate diaphragms), however, if intermediate concrete diaphragms are used the diaphragms shall not be placed in the bay where the closure pour is located. For PPCB bridges with intermediate steel diaphragms, the diaphragm bolts used in connecting the channel to the bent plate shall remain loose until the second stage has been poured. The bolts then shall be tightened before the closure pour [BSB SS 1036]. The abutment and pier diaphragms should be staged with the deck pours and be in place before the closure pour is made, as shown in Figure 5.2.4.1.2-3.

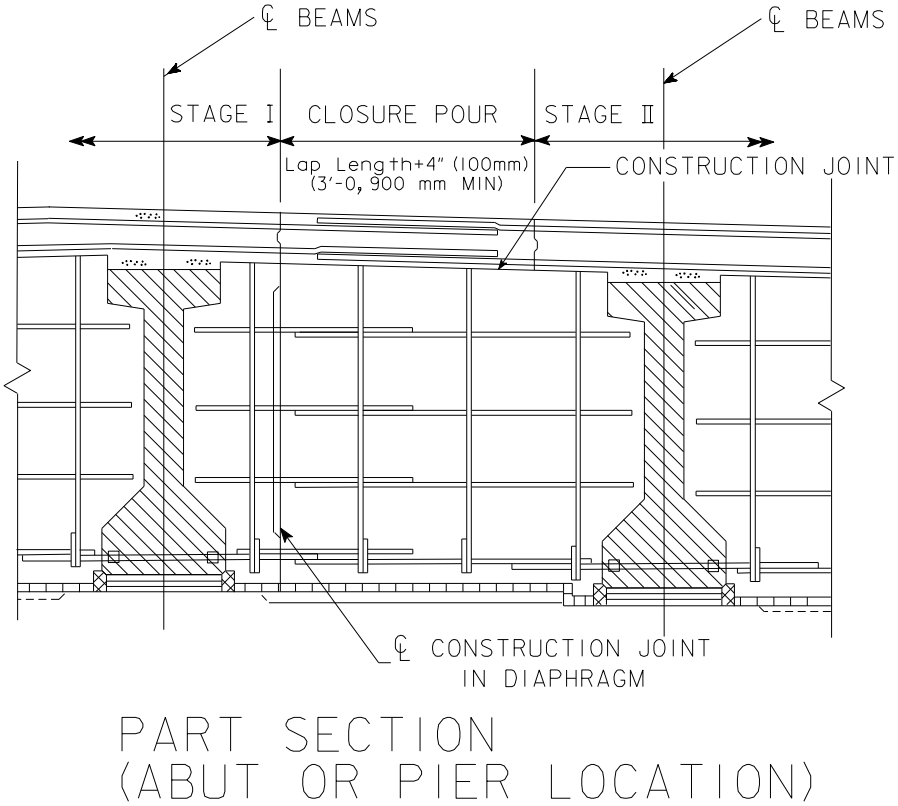

Figure 5.2.4.1.2-3. Staging of closure pour for PPCB bridge abutment and pier diaphragms [Note: Figure will be updated for lap length in future BDM release.]

For CWPG bridges, the bracing in the bay with the closure pour is to be installed after the second stage has been poured and prior to placing the closure pour. Bolt holes shall be field drilled in the cross bracing members to provide allowances for fit-up of the diaphragm as shown in Figure 5.2.4.1.2-4. For integral abutments in CWPG bridges, the procedure shown in Figure 5.2.4.1.2-3 for prestressed beams shall be followed.

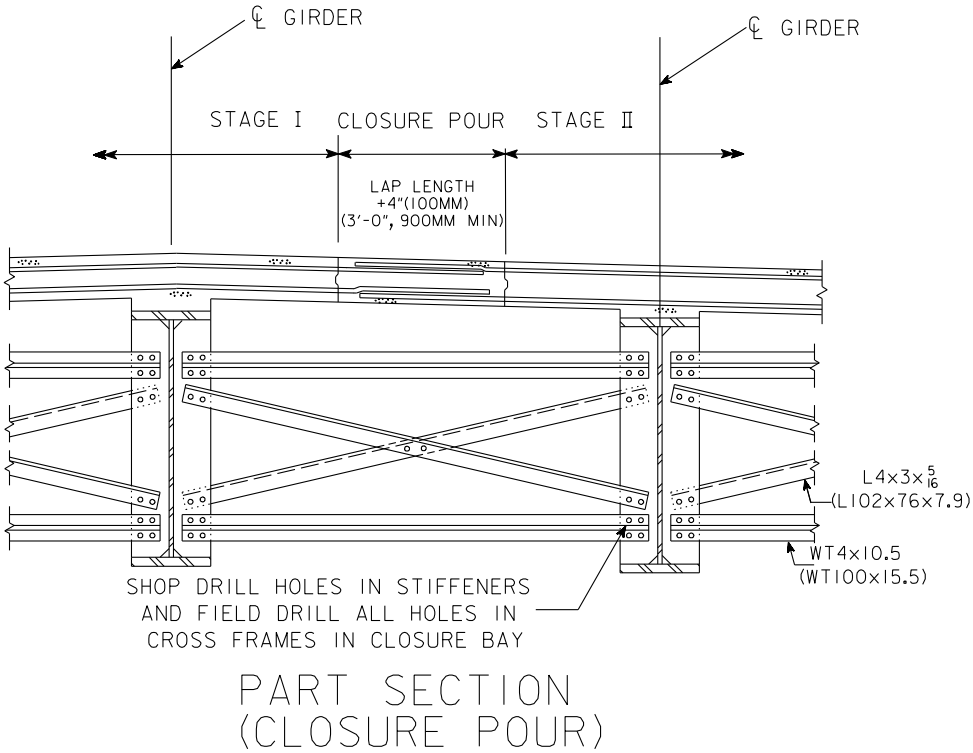

Figure 5.2.4.1.2-4. Staging of closure pours and cross frames for CWPG bridges
[Note: Figure will be updated for lap length in future BDM release.]

5.2.4.2 Empirical decks

Decks designed by the empirical method are to be used only with permission of the Bridge Engineer.

5.2.4.3 Prestressed deck panels

Prestressed deck panels are stay-in-place forms illustrated in Figure 5.2.4.3 that span between pretensioned prestressed concrete beams and are an option for traditional decks under some conditions. The Bureau permits use of the panels only if all the following conditions are met:

- The bridge is constructed with pretensioned prestressed concrete beams.
- Intermediate diaphragms are steel.
- Skew is 45 degrees or less.
- The bridge is on a rural highway with a traffic volume ADT of less than 3000 VPD.
- The bridge is not being built by staged construction.

The panel illustrated in Figure 5.2.4.3 and detailed on standard sheets [BSB SS 1037As1-1037C] meets the minimum thickness of 3.5 inches required in the AASHTO LRFD specifications [AASHTO-LRFD 9.7.4.3.1].

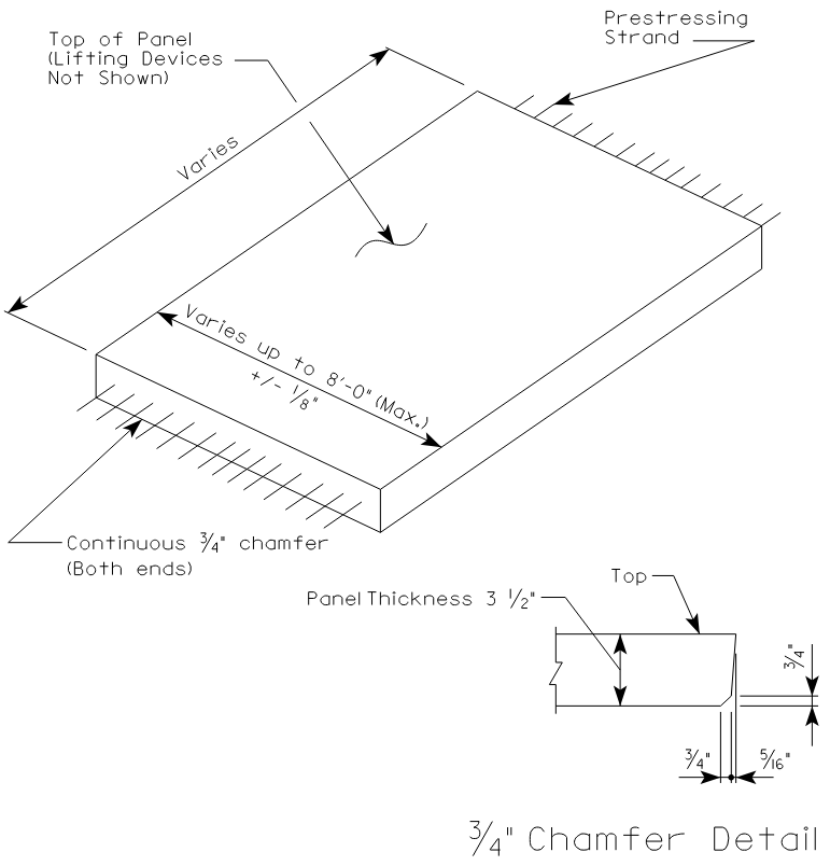

Figure 5.2.4.3. Prestressed deck panel

The decision to prepare plans allowing use of prestressed deck panels shall be made by the Bridges and Structures Bureau. The decision to permit the use of panels not allowed as an alternate on the plans, but requested by the contractor, shall be made by the Construction and Materials Bureau after consulting with the Bridges and Structures Bureau.

The panels are intended to serve as a form and working platform during construction and to serve compositely with the cast-in-place concrete as the bridge deck in the completed superstructure. The prestressing and reinforcement in the panels replaces the two bottom layers of reinforcement in the traditional cast-in-place concrete deck. To ensure continuity of the panel reinforcement in the transverse direction the panels are fabricated with hooked #3 epoxy coated bars that embed in the cast-in-place concrete above each beam.

Fiberboard strips of varying heights are glued to the top edges of prestressed beams in order to elevate the 3 1/2-inch thick panels to the required haunch dimension. The top two layers of deck reinforcing are placed above the panels, and all four layers of reinforcing are placed on the deck overhangs. To complete the deck, a minimum of 5 inches of concrete is cast on top of the panels. The panels shall be at least 28 days old at the time the deck is cast.

5.2.4.3.1 Analysis and design

5.2.4.3.1.1 Design criteria

Construction loading for the panels shall include panel weight, deck reinforcement, plastic concrete, and a 0.050 ksf construction live load. The load for the composite panel and cast-in-place deck shall include panel and deck weight, a future wearing surface of 0.020 ksf, HL-93 loading, and dynamic load allowance.

5.2.4.3.1.2 Materials

Concrete for the precast prestressed concrete deck panels shall have a minimum strength of 4.5 ksi at release and a minimum 28-day strength of 6.0 ksi.

Prestressing strands shall be 3/8-inch diameter ASTM A416 Grade 270 low relaxation strands with an initial tension of 16.1 kips per strand, 70% of the guaranteed ultimate tensile strength (GUTS).

Welded wire fabric shall be deformed and shall meet ASTM A 1064 [BSB SS 1037As1, 1037Bs1].

Reinforcement shall be ASTM A 615/A 615M, ASTM A 996/A 996M, or ASTM A 706/A 706M Grade 60.

5.2.4.3.1.3 Additional considerations

When the prestressed panels are allowed as an alternate, plan quantities shall be determined assuming a full depth deck. Payment to the contractor, even if the option to use precast panels is chosen, shall be based on the plan quantities and contract bid price.

5.2.4.3.2 Detailing

The Bureau has prepared standard sheets showing details for the panels for spans to 7 feet and for spans of 7 to 10 feet [BSB SS 1037As1-1037C].

The Bureau requires that shop drawings showing layout and construction details of the deck panels be submitted for approval.

Dimensional tolerances shall be as shown on standard sheets [BSB SS 1037As1, 1037Bs1].

When the prestressed panel alternate is shown on the plans the designer shall note the adjustments to deck concrete and epoxy coated reinforcement as follows.

- On the general notes and quantities sheet, include notes for reductions in structural concrete and epoxy coated reinforcing steel.
- On the superstructure bar list sheet, include a table of adjustments [BSB SS 1037C].
- On the beam sheet include a note for modified stirrups [BSB SS 1037C].

Although a contractor who uses the prestressed panel alternate needs the information on the adjustments to concrete and reinforcing for construction, the basis of payment is the cast-in-place deck design shown on the plans [IDOT SS 2425.05].

5.2.4.4 Two-course decks

Although the Bureau policy for typical bridges is to use a single course, 8.5-inch thick deck [BDM 5.2.4.1], that policy does not apply for all bridges. For special designs, the designer may consider a two-course deck. The two-course deck requires approval of the Chief Structural Engineer or the Bridge Project Development Engineer.

5.2.4.4.1 Analysis and design

The two-course deck shall be designed and constructed according to the following policies.

- No load shall be included in the design for a future wearing surface. At such time that the wearing surface no longer is serviceable, the entire upper course of the deck will be removed and replaced without adding load to the structure.
- The upper course of the deck shall be two inches thick and may be considered DC dead load.
- The upper course shall not be considered as composite with floor beams or girders.
- The lower, structural course of the deck shall be at least 8 to 8.5 inches thick, which shall be the design thickness. Thicknesses greater than 8 to 8.5 inches shall be used as required for relatively long deck spans.

- Where appropriate shear connection is provided (positive bending regions), the lower, structural course may be considered composite with floor beams or girders.

If the bridge with the two-course deck has a sidewalk with no overlay, allowance for a future wearing surface in the sidewalk area needs to be included in the dead load (DW).

5.2.4.4.2 Detailing

In the lower course, cover above the top mat of reinforcement shall be at least 2.0 inches.

The designer shall include a plan note for the concrete finish on the lower course [BDM 13.3.2, E234].

If the bridge with the two-course deck has a sidewalk with no overlay, cover of 2.0 inch will not be adequate in the sidewalk area or the deck overhang. Separate transverse bars in the sidewalk area need to be placed in order to achieve 2.75-inch cover, as for single course decks.

5.2.4.5 Transparent Stay-In-Place Deck Forms

Transparent stay-in-place deck forms that span between the beams are a contractor's option to use, replacing traditional deck forms, for bridges spanning over a railroad. Transparent stay-in-place deck forms may only be used for other conditions with approval from the Chief Structural Engineer.

When CADD Note "E235: Transparent Stay-In-Place Deck Forms, Contractor's Option" is included in the plans, the Contractor may use transparent stay-in-place forms but shall not start work until the shop drawings and design calculations have been submitted for review and acceptance. The transparent stay-in-place form material and installation cost shall be included in the pay item for "Structural Concrete (Bridge)" for the concrete bridge deck, with no additional cost to the State.

The decision to prepare plans allowing the use of transparent stay-in-place deck forms shall be made by the Bridges and Structures Bureau.

The panels are intended to serve as a form and working platform during construction however after construction they do not serve a structural function.

The Bureau requires that working drawings showing calculations, layout and construction details of the deck forms be submitted for approval.

5.2.4.5.1 Analysis and design

5.2.4.5.1.1 Materials

- The stay-in-place forms shall have a minimum average transparency of 70% to allow for clear inspection of the deck underside.
- All structural steel members used in the form assembly (including cold-formed and rolled steel) shall be corrosion protected.
- The weight of the stay-in-place deck forming system, including any additional concrete, if required, shall not exceed 3.5 psf over the full form panel area to the structure.

5.2.4.5.2 Detailing

Bridges that meet the criteria shall include:

- CADD Note "E235: Transparent Stay-In-Place Deck Forms, Contractor's Option" in the General Notes.

- In the Working Drawing and Calculation Submittal's box for working drawing description and calculation description include: "Transparent Stay-In-Place Forms (if used)". Certification by an Iowa P.E. is required.
- In the Estimate Reference Information for Structural Concrete (Bridge) add the following note: "Includes transparent stay-in-place deck form material and installation cost, if used by the Contractor, with no additional cost to the State."

C5.2 Decks

C5.2.1.1 Policy Overview

01 August 2023 ~ Deck Thickness and MASH Rails

The following commentary was added in 2023 to have a historical record of changes to the deck design and details for easy reference. The changes listed below were made for projects in the September 2024 letting unless granted an exemption.

- Interior deck thickness increased from 8 inches to 8.5 inches.
- Exterior deck edge thickness increased from 8.75 inches for PPCBs and 9 inches for steel beams to 10 inches for both.
- Exterior deck thickness at edge of top flange increased from a range of 9 to 10.25 inches to 10.25 to 11 inches.
- The built-in wearing surface thickness increased from 0.50 inches to 0.75 inches.
- The depth of cover for top transverse reinforcement increased from 2.50 inches to 2.75 inches.
- The depth of cover for bottom transverse reinforcement increased from 1.00 to 1.50 inches.
- The top transverse bar reinforcement (a-bars) used to extend from edge to edge of deck with additional j1 bars in the deck overhang between the a-bars. The top transverse bar reinforcement (a-bars) now only extend partially into the exterior beam bays and are lapped with the j1 bars which are used exclusively in the deck overhangs.
- The j1 bars went from straight bars to having hooks on one end of the bar at the edge of deck.
- The lap and development lengths were updated to meet the 2017 AASHTO LRFD Bridge Design Specifications, 8th Edition.
- The standard 34-inch tall TL-4 and 44-inch tall TL-5 NCHRP 350 F-shape barrier rails were replaced with standard 38-inch tall TL-4 and 44-inch tall TL-5 MASH single slope barrier rails.

C5.2.2.4 Railing

01 August 2023 ~ NCHRP 350 and MASH Rails

The following commentary was added in 2023 to have a historical record of past practice for easy reference. Table C5.2.2.4-1 is reproduced from AASHTO LRFD Table A13.2-1, 9th Edition, 2020 and is applicable for decks/rails developed under NCHRP 350. The standard 34-inch tall TL-4 and 44-inch tall TL-5 NCHRP 350 F-shape barrier rails used the yield line values in Table C5.2.2.4-2 based on NCHRP 350 requirements. The F-shape rails have been phased out for all projects starting with the September 2024 letting unless granted an exemption.

Table C5.2.2.4-1. Design Forces for Traffic Railings

Design Forces and Designations	TL-4	TL-5
Rail Height, H (inches)	≥ 32	≥ 42
F_t, Transverse (kips)	54	124
F_L, Longitudinal (kips)	18	41
F_v, Vertical (kips)	18	80
L_t and L_L (ft)	3.5	8
L_v (in)	18	40
H_e (in)(1)	32	42

Table Notes:

(1) Vertical height of the resultant load.

(2) Definition of variables:

F_t = Transverse force applied perpendicular to the barrier

F_L = Longitudinal force applied by friction along barrier's direction

F_v = Vertical force applied downward on the top of the barrier

L_t = Length of the transverse force

L_L = Length of the longitudinal force

H_e = Height of the peak force from ground level
L_v = Length of the vertical distributed design load

Table C5.2.2.4-2. Yield line values for F-section barrier rail

Rail rating and condition	R_w kips	L_c feet	M_c, average ft-k
TL-4, interior	117	11.5	13.0
TL-4, end	74	8.0	13.0
TL-5, interior	128	16.7	13.9
TL-5, end	133.6	9.7	13.9

C5.2.4.1.2 Detailing

01 October 2020 ~ Deck Pour Section and Sequence

The following commentary was added in 2020 to address issues related to deck pour section and sequence.

- Bridge plans should always provide a baseline section and sequence concrete pour diagram for the following reasons.
    - It establishes a biddable sequence for the contractor that minimizes deck cracking.
    - It establishes a manageable pour sequence option for smaller bridge contracting firms and, therefore, opens the project up to more bidders.
    - It establishes header locations in each span which assists contractors with stop locations for larger pours when emergency situations arise, such as, inclement weather or equipment issues.
- Section and sequence concrete pours should be planned so as to minimize the potential for deck cracking due to tension during the deck pour and to minimize cold joints in the deck. Generally speaking, the stress in any portion of the hardened concrete in the top of the deck should not exceed the modulus of rupture at any point during the deck pour. Even though this is desirable, AASHTO C6.10.3.2.4 does permit the concrete to exceed the modulus of rupture for steel beam bridges if longitudinal reinforcement is included to control cracking according to Article 6.10.1.7. The Iowa DOT does include the total amount of this longitudinal reinforcement in the deck per AASHTO; however, it does not put two-thirds of it in the top of the deck (per AASHTO), but rather allows it to be distributed equally between the top and bottom layers [BDM 5.5.1.4.1.18] primarily to limit congestion.
- Baseline section and sequence concrete pours are rarely used by the contractor since it requires additional wait times between deck pours and requires additional forming for headers. Designers should, if possible, indicate an option for one continuous deck concrete placement from one end of the bridge to the other if there are no structural or constructability concerns and the total volume of deck concrete is 500 CY or less. If total volume of deck concrete exceeds 500 CY the designer should generally provide a section and sequence option that includes section sizes from 300 CY to 500 CY. The benefits of this approach are as follows.
    - The DOT can realize savings from reductions in headers and construction time.
    - The DOT can spend less time reviewing alternate pours.
    - The quality of the deck pour is generally better if there are fewer cold joints.
    - It gives the contractors clear bidding expectations to eliminate uncertainty if an alternate would be approved.
    - It reduces the possibility of disparate treatment of contractors by the various RCEs.
- A key factor in deck pours is maintaining plasticity of concrete. If concrete plasticity can be maintained the issue of tensile stress deck cracking due to concrete placement loads in adjacent spans is generally alleviated since fluid concrete cannot crack. Most contractors can maintain plasticity of the concrete for deck pours of 500 CY or less. Some contractors can maintain plasticity for significantly larger pours. For this reason, plan notes should not explicitly exclude a deck pour sequence that involves a deck pour larger than 500 CY simply because the deck pour is larger than 500 CY. A contractor should be allowed to propose a deck pour sequence that exceeds 500 CY and approval should be granted or denied based on the viability of their proposal. Designers should also keep in mind that long narrow bridges may be less of an issue than wide bridges. Concrete placement on a narrow bridge in a span far removed from a span that was poured earlier as part of the same continuous pour and is beginning to harden has little influence on deck cracking in the span poured earlier.

- CADD notes were modified for adjacent deck pours to include a minimum 2 day waiting period and a requirement that the previous pour must achieve 75% of the its 28-day concrete strength for the following reasons.
    - The restriction ensures header removal does not damage the adjacent deck concrete.
    - Deck concrete cracking may be reduced in any concrete that may undergo tension as a result of the adjacent pour.
- CMB or experienced RCEs generally review and approve/reject alternate pours submitted by contractors. Concurrence from the engineer of record may be sought.
- In general, CADD notes for deck pours should indicate within the note the reasons for any restrictions imposed by the note. For example, contractors are better able to prepare bids if the note includes language stating that beam end span uplift is an issue that restricts a pour sequence. A contractor proposing an alternate pour that includes girder uplift may request to include additional concrete dead load as a counterweight, but this method of countering uplift is unusual. A more common approach is to use positive anchorages similar to what is shown in the figure below. Contractor requests for alternate pour sequences involving uplift must submit calculations and details signed by an Iowa Professional Engineer for approval by the bridge design engineer of record.

https://www.fhwa.dot.gov/bridge/pubs/nhi15044.pdf

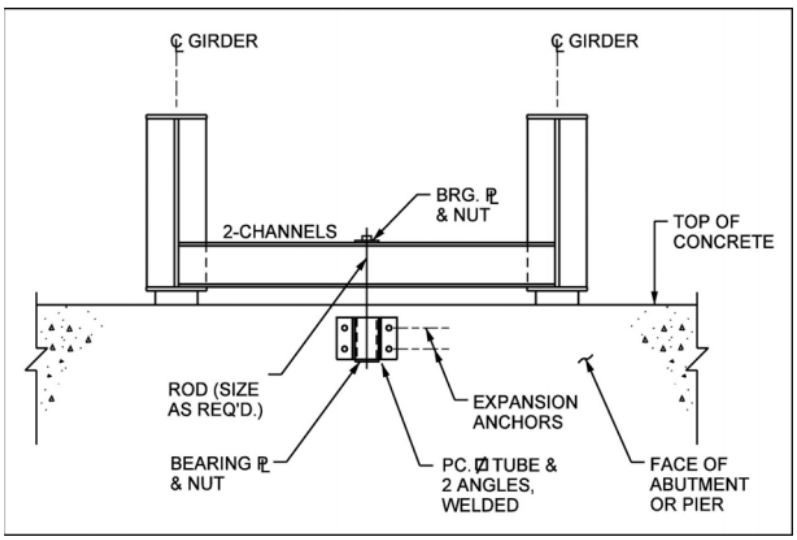

Figure 3-35 Hold-Down Assembly for Steel Girders

Example 1 Three span non-continuous PPCB bridge with integral abutments

Note: This example is technically independent of abutment type.

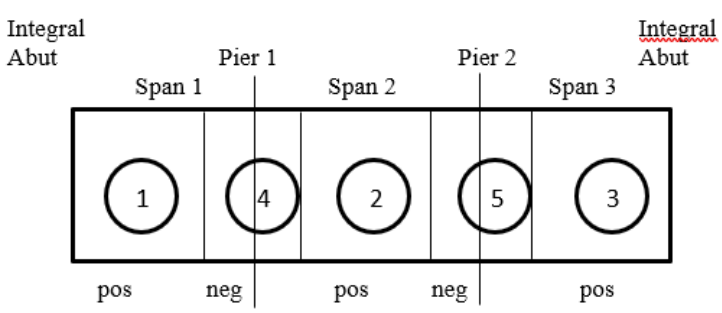

Section	Qty (CY)
1	100
2	90
3	100
4	40
5	40
Total	370

While there are several possible pour sequence options, there are only two pour sequences that should be covered by plan note for this example. Pour option 1 is the baseline sequence. The baseline sequence establishes a pour sequence that should be workable for bridge contracting firms of any size and, therefore, opens the project up for more bidders. Additionally, the option 1 baseline sections establish locations where headers are ideally placed in each span. Establishing ideal header locations for other larger pour options assists contractors with stop locations when emergency situations arise, such as, inclement weather or equipment issues. Pour option 2, which is the most likely sequence a contractor will follow, is an end-to-end pour. An end-to-end pour option will generally be an acceptable pour sequence for all PPCB bridges with total deck concrete quantities of 500 CY or less.

Pour Option	Sequence
1	1-2-3-4-5
2	(1+4+2+5+3) end-to-end pour

Notes:

- Dashes separate individually poured sections within a pour sequence.
- Parenthesis around a group of sections with plus signs indicates a singular larger section comprised of the individual sections that is placed in one continuous pour from one end to the other.

Note E926 for “Prestressed concrete beam bridge, deck placement” with appropriate modifications would be included in the plans as follows:

CONCRETE DECK SHALL BE PLACED IN SECTIONS AND SEQUENCES INDICATED. AN APPROVED ALTERNATE PROCEDURE IS TO PLACE THE CONCRETE DECK IN ONE CONTINUOUS POUR BEGINNING AT ONE END OF THE BRIDGE. ALTERNATE PROCEDURES FOR PLACING DECK CONCRETE MAY BE SUBMITTED FOR APPROVAL TOGETHER WITH A STATEMENT OF THE PROPOSED METHOD AND EVIDENCE THAT THE CONTRACTOR POSSESSES THE NECESSARY EQUIPMENT AND FACILITIES TO ACCOMPLISH THE REQUIRED RESULTS. THE BRIDGE ENGINEER SHALL REVIEW ANY ALTERNATE PROCEDURES. THE COST OF ANY ADDITIONAL ANALYSIS AND PLAN MODIFICATIONS SHALL BE PAID FOR BY THE CONTRACTOR. THE ENGINEER SHALL DETERMINE IF A RETARDING ADMIXTURE IS REQUIRED TO MAINTAIN PLASTICITY OF THE CONCRETE DECK DURING PLACEMENT.

DECK CONCRETE SECTIONS SHALL CURE FOR A MINIMUM OF 48 HOURS AND SHALL ACHIEVE A MINIMUM STRENGTH OF 75% OF THE 28 DAY DECK CONCRETE STRENGTH PRIOR TO REMOVING DECK HEADERS AND BEGINNING AN ADJACENT POUR.

Example 2 Five span continuous steel girder bridge with stub abutments

Notes:

- This example also applies to semi-integral abutments since this abutment type also allows for end girder rotation.
- This example is not appropriate if integral abutments were specified.
- This example assumes there are no uplift issues.

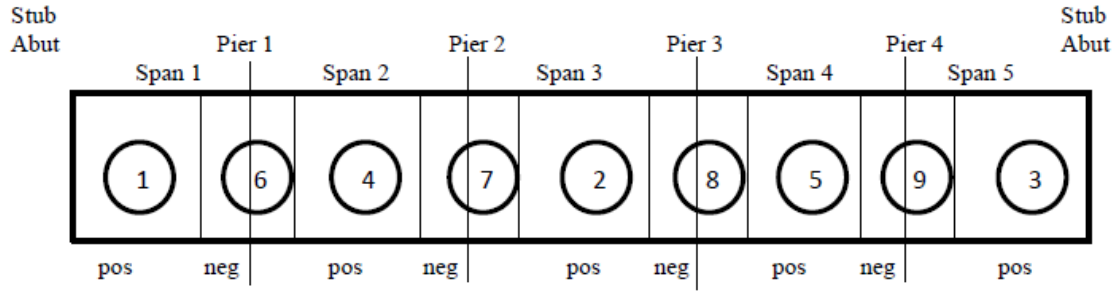

Section	Qty (CY)
1	100
2	90
3	100
4	90
5	90
6	40
7	40
8	40
9	40
Total	630

There are numerous pour sequences that would likely be permitted. The listing below contains several possible options. The two options that should normally be included in the plans are options 1 and 6. Pour option 1 is the baseline sequence. Pour option 6 is the most likely sequence a contractor will follow if they are constrained in their pouring capability to 500 CY. Since total deck concrete exceeds 500 CY, an end to end pour will not be explicitly permitted by plan note, but it will also not be explicitly prohibited by plan note. The designer will need to explicitly verify their design for Pour Option 1 and 6 and should also verify their design for an end to end pour as that is a likely alternative that will be requested by the contractor.

Pour Option	Sequence
1	1-2-3-4-5-6-7-8-9
2	1-4-2-5-3-6-7-8-9
3	1-(6+4)-(7+2)-(8+5)-(9+3)
4	(1+6+4)-(7+2+8+5)-(9+3)
5	(1+6+4)-(2+8+5)-7-(9+3)
6	(1+6+4+7+2)-(8+5+9+3)
7	End to end pour would not be explicitly permitted by plan note, but it would also not be explicitly prohibited by plan note. The contractor would need to submit and get approval for an alternate procedure involving an end to end deck pour.

Notes:

- Dashes separate individually poured sections within a pour sequence.
- Parenthesis around a group of sections with plus signs indicates a singular larger section comprised of the individual sections that is placed in one continuous pour from one end to the other.

Note E1040A for “Deck placement sequence, steel girder” with appropriate modifications would be included in the plans as follows:

CONCRETE DECK SHALL BE PLACED IN ONE OF THE TWO SECTIONS AND SEQUENCES INDICATED.

OPTION 1: NINE SECTIONS IN THE FOLLOWING SEQUENCE 1-2-3-4-5-6-7-8-9
OPTION 2: TWO SECTIONS IN THE FOLLOWING SEQUENCE (1+6+4+7+2)-(8+5+9+3)

ALTERNATE PROCEDURES FOR PLACING DECK CONCRETE MAY BE SUBMITTED FOR APPROVAL TOGETHER WITH A STATEMENT OF THE PROPOSED METHOD AND EVIDENCE THAT THE CONTRACTOR POSSESSES THE NECESSARY EQUIPMENT AND FACILITIES TO ACCOMPLISH THE REQUIRED RESULTS. THE BRIDGE ENGINEER SHALL REVIEW ANY ALTERNATE PROCEDURES. THE COST OF ANY ADDITIONAL ANALYSIS AND PLAN MODIFICATIONS SHALL BE PAID FOR BY THE CONTRACTOR. THE ENGINEER SHALL DETERMINE IF A RETARDING ADMIXTURE IS REQUIRED TO MAINTAIN PLASTICITY OF THE CONCRETE DECK DURING PLACEMENT.

DECK CONCRETE SECTIONS SHALL CURE FOR A MINIMUM OF 48 HOURS AND SHALL ACHIEVE A MINIMUM STRENGTH OF 75% OF THE 28 DAY DECK CONCRETE STRENGTH PRIOR TO REMOVING DECK HEADERS AND BEGINNING AN ADJACENT POUR.

Example 3 Two span continuous steel girder bridge with integral abutments

Notes:

- Since this steel girder bridge is continuous and has integral abutments, the regions near the integral abutments (sections 3 and 5 in the figure) are intended to be completed in sequence with the negative moment regions (see BDM 5.2.4.1.2).
- If this bridge had stub abutments or semi-integral abutments, then the regions near the ends of the abutments (sections 3 and 5) would be omitted and become part of the positive moment regions (sections 1 and 2).
- This example assumes there are no uplift issues.

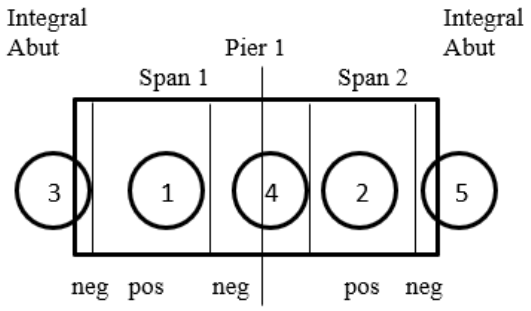

Section	Qty (CY)
1	90
2	90
3	10
4	40
5	10
Total	240

Two span continuous steel girder bridges are a special case as they require both positive moment regions (sections 1 and 2) to remain plastic until both sections are poured. This is done to reduce the potential for cracking in the section that is poured first since the second pour tends to produce tension in top of the deck of the first pour if it were allowed to harden prior to the second pour. The deck at the integral abutments and the integral abutment diaphragms are poured as part of the negative moment sections since they would have a tendency to create restraining moments and cause cracking if they were poured as part of the positive moment region pours. There are only two pour sequences that should be covered by plan note for this example. Pour option 1 is the baseline sequence. Pour option 4, which is the most likely sequence a contractor will follow, is an end-to-end pour. Option 4 is included in the plan note since the total deck concrete quantities are less than 500 CY. The designer will need to explicitly verify their design for Pour Option 1 and 2. Pour Options 2 and 3 recognize the fact that one of deck sections at an integral abutment may be poured with the last positive moment section without detriment to the deck. Options 2 and 3 also

have the benefit of removing a transverse construction joint. These options are currently left out of the plan notes since they tend to create confusion and, in most instances, contractors will seek to do an end-to-end pour.

Pour Option	Sequence
1	1-2-3-4-5
2	1-(2+5)-3-4
3	2-(1+3)-5-4
4	(3+1+4+2+5) end-to-end pour

Notes:

- Dashes separate individually poured sections within a pour sequence.
- Parenthesis around a group of sections with plus signs indicates a singular larger section comprised of the individual sections that is placed in one continuous pour from one end to the other.

Note E1040B for "Deck placement sequence, steel girder, two span" with appropriate modifications would be included in the plans as follows:

CONCRETE DECK SHALL BE PLACED IN SECTIONS IN THE FOLLOWING SEQUENCES:

A. SECTION 1 AND SECTION 2 SHALL BE PLACED IN THE SAME DAY. HOWEVER, THE SECTION PLACED FIRST MUST REMAIN PLASTIC UNTIL THE OTHER SECTION IS COMPLETELY PLACED.

B. SECTIONS 3, 4 AND 5 MAY NOT BE PLACED UNTIL SECTIONS 1 AND 2 HAVE CURED FOR A MINIMUM OF 48 HOURS AND ACHIEVED A MINIMUM STRENGTH OF 75% OF THE 28 DAY DECK CONCRETE STRENGTH. DECK HEADERS SHALL ONLY BE REMOVED AFTER MEETING THESE REQUIREMENTS.

AN APPROVED ALTERNATE PROCEDURE IS TO PLACE THE CONCRETE DECK IN ONE CONTINUOUS POUR BEGINNING AT ONE END OF THE BRIDGE. ALTERNATE PROCEDURES FOR PLACING DECK CONCRETE MAY BE SUBMITTED FOR APPROVAL TOGETHER WITH A STATEMENT OF THE PROPOSED METHOD AND EVIDENCE THAT THE CONTRACTOR POSSESSES THE NECESSARY EQUIPMENT AND FACILITIES TO ACCOMPLISH THE REQUIRED RESULTS. THE BRIDGE ENGINEER SHALL REVIEW ANY ALTERNATE PROCEDURES. THE COST OF ANY ADDITIONAL ANALYSIS AND PLAN MODIFICATIONS SHALL BE PAID FOR BY THE CONTRACTOR. THE ENGINEER SHALL DETERMINE IF A RETARDING ADMIXTURE IS REQUIRED TO MAINTAIN PLASTICITY OF THE CONCRETE DECK DURING PLACEMENT.

Example 4 Unbalanced two span continuous steel girder bridge with integral abutments

Note:

- Since this steel girder bridge is continuous and has integral abutments, the regions near the integral abutments (sections 3 and 5 in the figure) are intended to be completed in sequence with the negative moment regions (see BDM 5.2.4.1.2).
- If this bridge had stub abutments or semi-integral abutments, then the regions near the ends of the abutments (sections 3 and 5) would be omitted and become part of the positive moment regions (sections 1 and 2).
- This example assumes girder uplift issues at the east abutment in Span 2 would occur if span 1, section 2 were poured first.

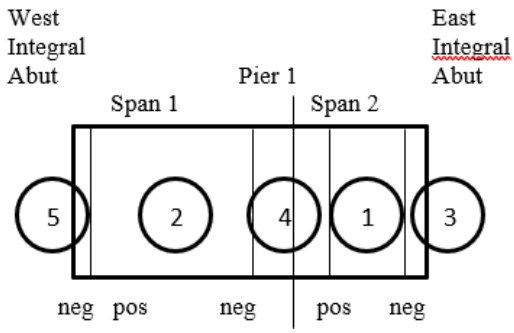

Section	Qty (CY)
1	50
2	130
3	10
4	40
5	10
Total	240

Two span continuous steel girder bridges are a special case as they require both positive moment regions (sections 1 and 2) to remain plastic until both sections are poured. This is done to reduce the potential for cracking in the section that is poured first since the second pour tends to produce tension in top of the deck of the first pour if it were allowed to harden. The deck at the integral abutments and the integral abutment diaphragms are poured as part of the negative moment sections since they would have a tendency to create restraining moments and cause cracking if they were poured as part of the positive moment region pours. In this example, span 2 is considerably shorter than span 1 and therefore the girder ends at the east abutment of span 2 could undergo uplift if section 2 in span 1 were poured first. If this potential exists, the designer should designate pour sequences that preload the span with the potential for uplift in order to prevent it. There are only two pour sequences that should be covered by plan note for this example. Pour option 1 is the baseline sequence. Pour option 2, which is the most likely sequence a contractor will follow, is an end-to-end pour. Option 2 is included in the plan note since the total deck concrete quantities are less than 500 CY. The designer will need to explicitly verify their design for Pour Option 1 and 2.

Pour Option	Sequence
3	1-2-3-4-5
4	(3+1+4+2+5) end-to-end pour

Notes:

- Dashes separate individually poured sections within a pour sequence.
- Parenthesis around a group of sections with plus signs indicates a singular larger section comprised of the individual sections that is placed in one continuous pour from one end to the other.

Note E1040C for “Deck placement sequence, steel girder, unbalanced two span” with appropriate modifications would be included in the plans as follows:

CONCRETE DECK SHALL BE PLACED IN SECTIONS IN THE FOLLOWING SEQUENCES:

A. SECTION 1 AND SECTION 2 SHALL BE PLACED IN THE SAME DAY. HOWEVER, DUE TO UPLIFT CONCERNS AT THE EAST END OF THE BRIDGE, SECTION 1 MUST BE PLACED FIRST AND REMAIN PLASTIC UNTIL SECTION 2 IS COMPLETELY PLACED.

B. SECTIONS 3, 4 AND 5 MAY NOT BE PLACED UNTIL SECTIONS 1 AND 2 HAVE CURED FOR A MINIMUM OF 48 HOURS AND ACHIEVED A MINIMUM STRENGTH OF 75% OF THE 28 DAY DECK CONCRETE STRENGTH. DECK HEADERS SHALL ONLY BE REMOVED AFTER MEETING THESE REQUIREMENTS.

AN APPROVED ALTERNATE PROCEDURE IS TO PLACE THE CONCRETE DECK IN ONE CONTINUOUS POUR BEGINNING AT THE EAST ABUTMENT DUE TO UPLIFT CONCERNS. ALTERNATE

PROCEDURES FOR PLACING DECK CONCRETE MAY BE SUBMITTED FOR APPROVAL TOGETHER WITH A STATEMENT OF THE PROPOSED METHOD AND EVIDENCE THAT THE CONTRACTOR POSSESSES THE NECESSARY EQUIPMENT AND FACILITIES TO ACCOMPLISH THE REQUIRED RESULTS. ALTERNATE PROCEDURES MUST ADDRESS THE POTENTIAL FOR GRIDER UPLIFT AND WILL, AT A MINIMUM, REQUIRE CERTIFICATION BY A PROFESSIONAL ENGINEER LICENSED IN THE STATE OF IOWA IF POSITIVE RESTRAINTS OR COUNTERWEIGHTS ARE INCORPORATED TO ADDRESS UPLIFT. THE BRIDGE ENGINEER SHALL REVIEW ANY ALTERNATE PROCEDURES. THE COST OF ANY ADDITIONAL ANALYSIS AND PLAN MODIFICATIONS SHALL BE PAID FOR BY THE CONTRACTOR. THE ENGINEER SHALL DETERMINE IF A RETARDING ADMIXTURE IS REQUIRED TO MAINTAIN PLASTICITY OF THE CONCRETE DECK DURING PLACEMENT.

TABLE OF CONTENTS ~ HAUNCHES

5.3 Haunches
5.3.1 General
5.3.1.1 Policy overview
5.3.1.2 Design information
5.3.1.3 Definitions
5.3.1.4 Abbreviations and notation
5.3.1.5 References
5.3.2 PPCB bridges
5.3.2.1 Analysis and design
5.3.2.2 Detailing
5.3.3 CWPG bridges
5.3.3.1 Analysis and design [AASHTO-LRFD 6.10.10.1.4]
5.3.3.2 Detailing
5.3.4 RSB bridges
5.3.4.1 Analysis and design [AASHTO-LRFD 6.10.10.1.4]
5.3.4.2 Detailing

5.3 Haunches

5.3.1 General

For continuous welded plate girder (CWPG) and rolled steel beam (RSB) bridges, haunch design is directly related to lengths of shear studs that are welded to the top flanges of the girders or beams. When designing the haunches for steel bridges the designer should consult Bureau policy for shear studs [BDM 5.5.1.4.1.8] in addition to the haunch policies in following articles.

5.3.1.1 Policy overview

For pretensioned prestressed concrete beam (PPCB), continuous welded plate girder (CWPG), and rolled steel beam (RSB) bridges the Bureau typically uses a variable concrete haunch thickness at each beam or girder to fit the roadway surface to the top profiles of the beams or girders. The design haunch is used in determining the beam or girder seat elevations and the estimated deck concrete quantity.

The designer should set haunch thicknesses inside the minimum design limit at edge of beam or girder and maximum design limit at centerline of beam or girder, with consideration of shear steel, so that the contractor will have tolerances for both upward and downward adjustments in the field.

In the field the contractor will set the beams or girders on the bearings at the beam seats and will survey the tops of beams or girders at the intervals given on the “Deck Haunch Data Details” sheet [BSB SS 1066]. Then the contractor can subtract the survey elevations from the beam line haunch elevations given on the sheet to determine the haunch thicknesses for setting the deck forms.

If limits given on the plans for haunch are exceeded in the field, the Resident Construction Engineer (RCE) may reset the profile grade to adjust to the differing as-built conditions. If the grade adjustment is not practical for a PPCB bridge, thick haunches may be reinforced with additional bars so that the beam stirrups are extended a minimum of 2.5 inches into the deck. If the grade adjustment is not practical for a CWPG or RSB bridge, the Bureau will address the haunch problem on a case-by-case basis.

5.3.1.2 Design information

Reserved

5.3.1.3 Definitions

Reserved

5.3.1.4 Abbreviations and notation

CWPG, continuous welded plate girder
PPCB, pretensioned prestressed concrete beam
RCE, Resident Construction Engineer
RSB, rolled steel beam

5.3.1.5 References

Reserved

5.3.2 PPCB bridges

5.3.2.1 Analysis and design

The maximum and minimum field and design limits allowed for haunches are given in Table 5.3.2.1-1.

Table 5.3.2.1-1. Maximum and minimum haunch thickness

Beam Location	Field Limits	Design Limits
Maximum at or near center of span, centerline of beam flange	3.5 inches	3.0 inches
Maximum at or near beam ends, centerline of beam flange	4.0 inches	3.5 inches
Minimum anywhere along beam, edge of beam flange	-0.5 inch (i.e. 0.5-inch embedment)	0.0 inches

The maximum and minimum haunch limits in Table 5.3.2.1-1 may, however, be controlled by shear steel heights. The required clearance and embedment of the shear steel with respect to the deck is given in Table 5.3.2.1-2. For BTB through BTE beams, shear reinforcement extends 5 inches above the top flange.

Table 5.3.2.1-2. Required shear steel clearance and embedment in the deck

Criteria	Field Limits	Design Limits
Minimum shear steel embedment into deck (may control maximum haunch)	2.5 inches	3.0 inches
Minimum shear steel clearance from top of deck (may control minimum haunch)	2.75 inches	3.25 inches

As shown in the tables above the design limits shall be within 0.5 inch of the field limits. Haunches shall be designed to stay within the design limits to allow for some haunch adjustment in the field. The maximum and minimum limits for the haunch thickness may vary along the beam. The variation of the maximum and minimum field haunch limits shall be shown in the plans.

The typical procedure for designing the haunch is as follows:

1.) To start, set the minimum design haunch at 0.5 inch at centerline of beam but not less than 0.0 inch at edge of top flange after cross slope is considered.
2.) Once the minimum is set, the haunch thickness can be checked along the entire beam line.
3.) Check the minimum and maximum haunches based on shear steel heights. When checking the maximum haunch, the designer need not consider any cross slope or superelevation that increases the haunch at the edge of the deck.
4.) Modify the bridge seat elevations as necessary to attempt to fit within the haunch limits.

If the haunch at the centerline of the beam flange exceeds the maximum design limits because of beam camber and grade considerations, the designer has the following two options. Option 1 is the preferred option when the maximum haunch is at midspan, and Option 2 is the preferred option when the maximum haunch is at the beam ends.

Option (1) Provide additional 5a3 and #6 longitudinal bars with the deck reinforcing to adequately reinforce the haunch where it exceeds 2.0 inches as shown in Figure 5.3.2.1.

This option is preferred at midspan because the additional 5a3 bars can be rotated from vertical to allow for some variation in the haunch thickness since actual beam camber can differ from predicted camber. The additional 5a3 and #6 longitudinal bars also help to reinforce the haunch and ensure composite action at midspan where it is most important. [An example of a case where the haunch at midspan may exceed the haunch at the beam ends is for a 2 span PPCB bridge that has a relatively steep crest vertical curve over a relatively short vertical curve length. (e.g. Boyson Road over I-380 in Linn County, FHWA No. 701065/604741; Penn Street over I-380 in Johnson County, FHWA No. 205006; Hoover Street over I-35 in Polk County, FHWA No. 051381)]

Option (2) Adjust the length of the beam shear reinforcement in the required areas to extend a minimum of 3.0 inches into the bottom of the bridge deck. For this option, the Bureau prefers that the beam shear reinforcement details be symmetrical, however, this is not mandatory. [e.g. On three-span bridges with long center spans and short end spans, it may be desirable to set abutment beam seat elevations such that the haunch thickness at the abutment is 0.50 inches while the haunch thickness at the pier may be thick enough to require shear reinforcement extensions or additional haunch reinforcement as described in Option 1. This unsymmetrical haunch thickness can help significantly reduce the haunch load on the beams in the end spans. To maintain symmetry of the shear stirrup extension height in the end spans, which in this case likely means a constant stirrup extension along the end spans, it is often preferable to use the additional haunch reinforcement in Option 1 near the piers.]. It is preferable to use 0.5-inch increments in the stirrup height adjustment rather than a uniform variation. The minimum design limit for shear steel design clearance from the top of the deck shall be 3.75 inches. This will minimize interference of the shear reinforcement with the top layer of reinforcement in the deck. Provide additional 5a3 and #6 longitudinal bars, like Option 1, to adequately reinforce haunches exceeding 3.0 inches.

This option is preferred at the beam ends where the effect of camber is minimal and the depth of haunch should be subject to minimal variation since it depends primarily on the accuracy of the beam seat elevations. [e.g. IA 39 over East Otter Creek in Crawford County, FHWA No. 021551]

In cases where the haunch weight exceeds the average haunch weight assumed in the standard beam design; it may be necessary to check if the beam design is adequate.

If, after the adjustments, the haunch limits appear not to work for the project, the designer shall consult with the supervising Unit Leader.

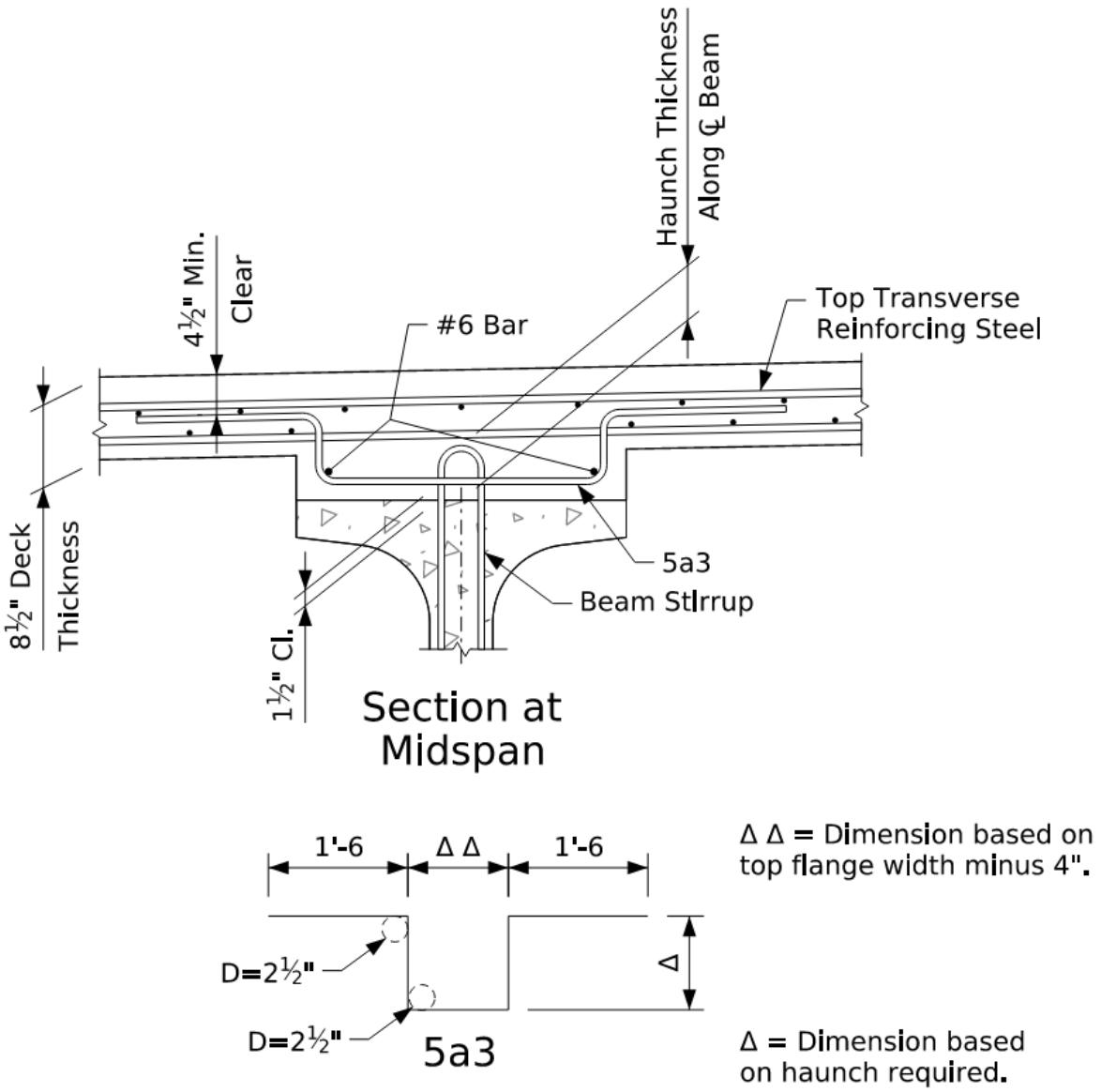

Figure 5.3.2.1. Option 1 reinforcement for thick haunches at midspan

5.3.2.2 Detailing

The designer should provide the following information and haunch details for interior beams on the plans [BSB SS 1065]:

- “Beam Camber Data”,
- “Deck Thickness at Beams (T)”, and
- “Deck Thickness Details”.

In addition, the designer shall provide a plan sheet titled “Deck Haunch Data Details” [BSB SS 1066]. The purpose of the sheet is to provide beam line haunch elevations convenient for the contractor to use in setting field haunch. The designer determines the elevations by taking each beam line deck elevation, subtracting the deck thickness, and adding the theoretical immediate and long-term dead load deflection for the deck and diaphragms. In the field the contractor determines each haunch thickness by subtracting the surveyed top of beam elevation from the beam line haunch elevation on the plan sheet.

The “Deck Haunch Data Details” sheet includes the following:

- “Table of Beam Line Deck Haunch Elevations”;
- “Miscellaneous Data Table” for immediate and long term deflections of the deck and diaphragms, cross slope adjustments, and allowable field haunch;
- A note for “Haunch Locations”; and
- “Haunch Detail”.

Deflections due to permanent loads applied after the deck has hardened, such as deflections due to barrier rail loads, are normally excluded from the above computations since these loads do not typically produce much additional deflection on the composite deck-beam system. Additionally, deflections are typically determined for the interior beams only and are assumed to be similar for the exterior beams when the bridge and beam spacing layouts follow the standard sheets. In relatively complex PPCB bridges, the designer may need to provide separate details for one or more beams if the deflections are expected to vary among the beams. The use of closure pours as described in BDM 5.2.4.1.2 may be a scenario where the deflections among the different beams will not be similar and would require separate details for beams adjacent to the closure pour. The designer shall discuss the presentation of the information for these scenarios with the supervising Unit Leader. The designer shall not rely on field personnel to adjust deflections based on the tributary load to the beams. The designer shall specifically note in the plans that deflections shown in the plans were based on actual deck and diaphragm loads and shall not be adjusted in the field.

5.3.3 CWPG bridges

5.3.3.1 Analysis and design [AASHTO-LRFD 6.10.10.1.4]

Because camber can be cut into the web of a continuous welded plate girder (CWPG), the haunch can be relatively constant, and the design range is limited accordingly. For haunch design, the haunch thickness shall be 0-inch minimum measured at edge of flange and 2-inches maximum measured at centerline of girder.

The maximum and minimum haunch limits may, however, be controlled by shear stud heights. The minimum shear stud clearance from top of deck is 2.75 inches, which may control minimum haunch, and the minimum shear stud embedment into the deck is 2.0 inches [AASHTO-LRFD 6.10.10.1.4], which may control maximum haunch.

To start, set the minimum design haunch at 0.5 inch at centerline of girder but not less than 0.0 inch at edge of the top flange after cross slope is considered. During construction the contractor then will have 0.5-inch tolerance for minimum haunch.

Once the minimum is set, the haunch thickness can be checked along the entire girder line. Changes in thickness of the top flange will affect shear studs, and therefore the changes need to be considered with respect to the haunch thickness shown on the plans.

Check the minimum and maximum haunches based on shear stud heights. The maximum haunch should not exceed 2.0 inches so that the contractor has 1.5-inch tolerance for maximum haunch in the field. Modify the bridge seat elevations, girder camber, and shear stud heights as necessary to fit within the haunch limits. If the haunch limits appear not to work for the project, the designer shall consult with the supervising Unit Leader.

5.3.3.2 Detailing

For typical CWPG bridges the designer should provide the following information and haunch details for interior girders on the plans. (See the example drawing in the commentary [BDM C5.3.3.2] and Figure 5.3.3.2.)

- “Beam Camber and Blocking Diagram”
- ”Deflection Diagram”

- A table containing the following information:
  - Deflections due to concrete only (deck + haunch)
  - Total dead load deflection (deck + haunch + structural steel)
  - Top flange plate thickness, excluding bolted field splice plate thickness
  - Concrete haunch thickness, excluding top flange plate thickness and bolted field splice plate thickness

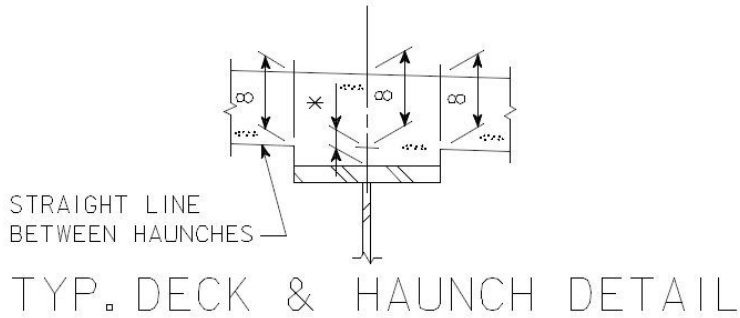

* CONCRETE HAUNCH DIMENSION MEASURED BETWEEN BOTTOM OF SLAB AND TOP OF TOP FLANGE PLATE.

THE MAXIMUM EMBEDMENT OF THE EDGE OF THE TOP FLANGE IN THE DECK SHALL BE $\frac{1}{2}$ INCH. SHEAR STUDS ARE TO HAVE A MINIMUM PENETRATION OF 2 INCHES INTO THE DECK AND BE AT LEAST $2\frac{1}{2}$ INCHES CLEAR OF THE TOP OF THE DECK. THESE REQUIREMENTS WERE USED IN SETTING THE MAXIMUM AND MINIMUM ALLOWABLE FIELD HAUNCH VALUES SHOWN IN THE "MISCELLANEOUS DATA TABLE" SHOWN ELSEWHERE ON THESE PLANS.

Figure 5.3.3.2. Typical deck and haunch detail and note [BSB SS 4305, 4308, 4309, and 4310] [Note: The deck thickness in the figure is outdated.]

In addition, the designer shall provide a plan sheet titled “Deck Haunch Data Details” [BSB SS 1066] with the following:

- “Table of Beam Line Deck Haunch Elevations”;
- “Miscellaneous Data Table” for deflections of the deck and haunch, cross slope adjustments, and allowable field haunch;
- A note for “Haunch Locations”; and
- “Haunch Detail”.

In relatively complex CWPG bridges, the designer may need to provide the deflection, girder fabrication, and theoretical haunch information in special tables and details. The designer shall discuss presentation of the information with the supervising Unit Leader.

5.3.4 RSB bridges

5.3.4.1 Analysis and design [AASHTO-LRFD 6.10.10.1.4]

For rolled beam bridges the designer shall determine rolled beam haunch with respect to dead load deflections.

The designer should stay at least 0.5 inch within the maximum haunch of 3.5 inches at centerline of beam and -0.5 inch at edge of beam. These field limits will be given for the contractor in a note on the plans.

The maximum and minimum haunch limits may, however, be controlled by shear stud heights. The minimum shear stud clearance from top of deck is 2.5 inches, which may control minimum haunch, and the minimum shear stud embedment into the deck is 2.0 inches [AASHTO-LRFD 6.10.10.1.4], which may control maximum haunch.

To start, set the minimum design haunch at 0.5 inch at centerline of beam but not less than 0.0 inch at edge of the top flange after cross slope is considered. During construction the contractor then will have 0.5-inch tolerance for minimum haunch.

Once the minimum is set, the haunch thickness can be checked along the entire beam line. Changes in beam depth will affect shear studs, and therefore the changes need to be considered with respect to the haunch thickness shown on the plans.

Check the minimum and maximum haunches based on shear stud heights. The maximum haunch should not exceed 3.0 inches so that the contractor has 0.5-inch tolerance for maximum haunch in the field. Modify the bridge seat elevations and shear stud heights as necessary to fit within the haunch limits.

If these modifications do not position the haunch within limits, consider camber but generally camber a beam only if the maximum haunch is greater than 2 inches. Rolled beams can be cambered at the mill by cold cambering or at the fabrication shop by cold or heat cambering in accordance with the standard specifications [IDOT SS 2408.02, K].

If the haunch limits appear not to work for the project, the designer shall consult with the supervising Unit Leader.

5.3.4.2 Detailing

For rolled beam bridges the designer should provide the following camber and haunch information on the plans:

- “Beam Camber and Blocking Diagram”
- ”Deflection Diagram”
- “Typ. Deck & Haunch Detail”.
- A table containing the following information:
    - Deflections due to concrete only (deck + haunch)
    - Total dead load deflection (deck + haunch + structural steel)
    - Top flange plate thickness, excluding bolted field splice plate thickness
    - Concrete haunch thickness, excluding top flange plate thickness and bolted field splice plate thickness

In addition, the designer shall provide a plan sheet titled “Beam Line Haunch Data”. The sheet shall include the following:

- “Table of Beam Line Haunch Elevations”,
- “Miscellaneous Data Table”, and
- “Haunch Detail”.

C5.3 Haunches

C5.3.3.2 Detailing

01 July 2015 ~ Revised Haunch Policies

The example diagrams shown below are for a two-span CWPG bridge. The designer should develop the diagrams using spacing intervals consistent with the intervals of the “Top of Deck Elevations” view for the bridge.

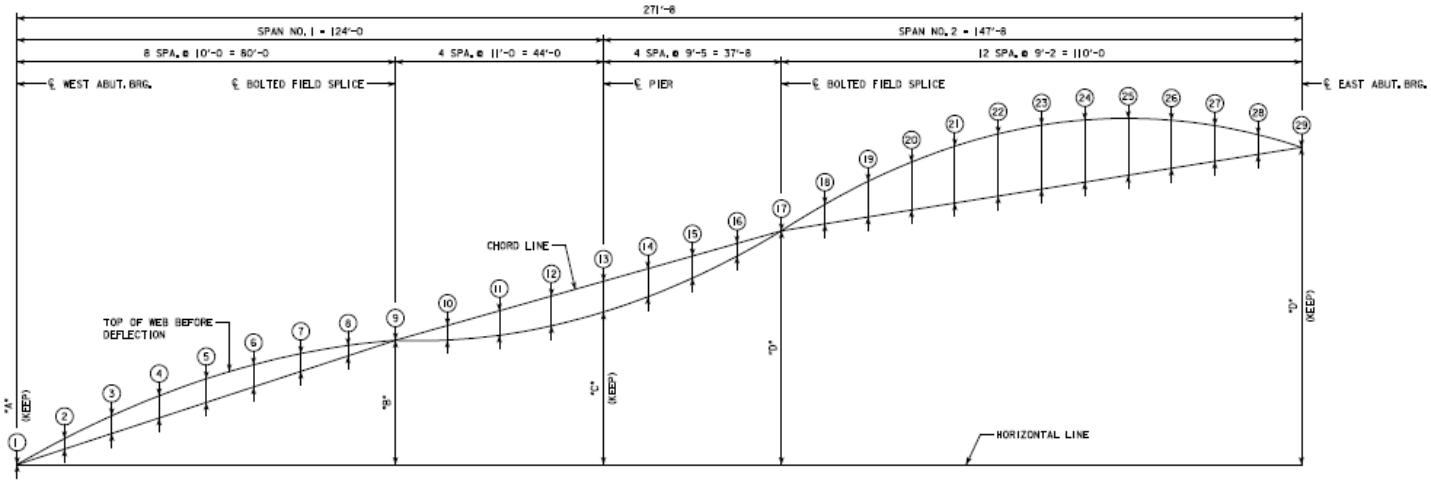

CAMBER AND BLOCKING DIAGRAM

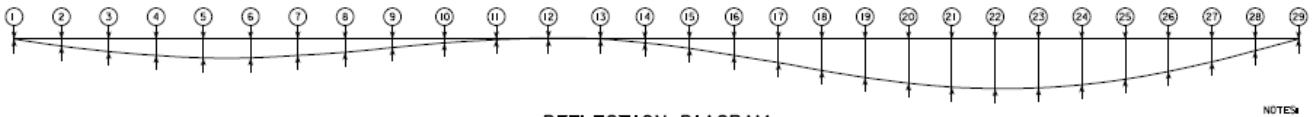

DEFLECTION DIAGRAM

		℄ WEST. ABUT. BRG.								℄ BOLTED SPLICE				℄ PIER NO. 1		
	LOCATION	1	2	3	4	5	6	7	8	9	10	11	12	13	14	15
	CAMBER ORDINATES (INCHES)	0.00	0.55	0.94	1.17	1.25	1.17	0.94	0.55	0.00	-0.76	-1.29	-1.57	-1.62	-1.48	-1.16
	DEFLECTION DUE TO CONCRETE ONLY (INCHES)	0.00	0.44	0.75	1.00	1.13	1.13	1.00	0.81	0.56	0.25	0.06	-0.06	0.00	0.25	0.56
	TOTAL DEAD LOAD DEFLECTION (INCHES)	0.00	0.56	1.00	1.31	1.50	1.50	1.31	1.06	0.69	0.31	0.06	-0.06	0.00	0.31	0.75
*	TOP FLANGE THICKNESS (INCHES)	0.88	0.88	0.88	0.88	0.88	0.88	0.88	0.88	1.75	1.75	1.75	2.38	2.38	2.38	1.75
**	THICKNESS OF CONCRETE HAUNCH (INCHES)	0.99	1.05	1.11	1.17	1.23	1.22	1.14	1.12	0.23	0.60	0.83	0.28	0.25	0.27	0.84

			℄ BOLTED SPLICE												℄ EAST. ABUT. BRG.
	LOCATION	16	17	18	19	20	21	22	23	24	25	26	27	28	29
	CAMBER ORDINATES (INCHES)	-0.67	0.00	1.03	1.88	2.53	3.00	3.28	3.38	3.28	3.00	2.53	1.88	1.03	0.00
	DEFLECTION DUE TO CONCRETE ONLY (INCHES)	1.00	1.44	1.94	2.31	2.69	2.94	3.00	2.94	2.75	2.44	1.94	1.38	0.69	0.00
	TOTAL DEAD LOAD DEFLECTION (INCHES)	1.31	1.88	2.50	3.06	3.50	3.81	3.94	3.88	3.63	3.19	2.56	1.81	0.94	0.00
*	TOP FLANGE THICKNESS (INCHES)	1.75	1.75	1.00	1.00	1.00	1.00	1.00	1.00	1.00	1.00	1.00	1.00	1.00	1.00
**	THICKNESS OF CONCRETE HAUNCH (INCHES)	0.70	0.35	0.99	0.98	1.01	1.06	1.09	1.09	1.05	0.99	0.90	0.85	0.82	0.90

* BOLTED FIELD SPLICE PLATE THICKNESS NOT INCLUDED
** TOP FLANGE PLATE THISKNESS AND BOLTED FIELD SPLICE PLATE THICKNESS ARE NOT INCLUDED.

NOTES:

CAMBER ORDINATES ARE MEASURED FROM A CHORD LINE BETWEEN FIELD SPLICES. UPWARD CAMBERS ARE POSITIVE AND DOWNWARD CAMBERS ARE NEGATIVE.

DOWNWARD DEFLECTIONS ARE POSITIVE AND UPWARD DEFLECTIONS ARE NEGATIVE. "DEFLECTION DUE TO CONCRETE ONLY" ONLY INCLUDES THE DECK AND CONCRETE HAUNCH. TOTAL DEAD LOAD DEFLECTION INCLUDES DECK, CONCRETE HAUNCH, AND STRUCTURAL STEEL. BARRIER RAIL AND FUTURE WEARING SURFACE ARE NOT INCLUDED.

BLOCKING DATA

	℄ WEST ABUT. BRG.	℄ BOLTED SPLICE	℄ PIER NO. 1	℄ BOLTED SPLICE	℄ EAST ABUT. BRG.
DIMENSION LOCATION	"A"	"B"	"C"	"D"	"E"
DIMENSION (INCHES)	0.00	13.12	17.73	24.69	33.51

DESIGN FOR
?
?
END SPANS
NTERIOR SPAN
STA.
?
IOWA DEPARTMENT OF TRANSPORTATION – HIGHWAY DIVISION
DESIGN SHEET NO. ____ OF ____ FILE NO. _____ DESIGN NO. _____

DESIGN TEAM | COUNTY | PROJECT NUMBER | SHEET NUMBER

2/28/2015 11:01:21 AM psodahl W:\Highway\Bridge\FinalSections\Final1\SODAHLP\PROJECTS\X-DEAN\HORE.brg CCD0001bdr 11x17_pdf.pltcfg

TABLE OF CONTENTS ~ PRETENSIONED PRESTRESSED CONCRETE BEAMS

5.4 Pretensioned Prestressed Concrete Beams
5.4.1 PPCB
5.4.1.1 General
5.4.1.1.1 Policy overview
5.4.1.1.2 Design information
5.4.1.1.3 Definitions
5.4.1.1.4 Abbreviations and notation
5.4.1.1.5 References
5.4.1.2 Loads
5.4.1.2.1 Dead
5.4.1.2.2 Live
5.4.1.2.3 Dynamic load allowance
5.4.1.2.4 Earthquake
5.4.1.2.5 Construction
5.4.1.3 Load application to superstructure
5.4.1.3.1 Load modifier
5.4.1.3.2 Limit states
5.4.1.4 BTB-BTE beams
5.4.1.4.1 Analysis and design
5.4.1.4.1.1 Analysis assumptions
5.4.1.4.1.2 Materials
5.4.1.4.1.3 Design resistance and stress limits
5.4.1.4.1.4 Section properties
5.4.1.4.1.5 Deflected strands and debonded straight strands
5.4.1.4.1.6 Prestress losses
5.4.1.4.1.7 Moment
5.4.1.4.1.8 Shear
5.4.1.4.1.9 Deflection and camber
5.4.1.4.1.10 Anchorage zone
5.4.1.4.1.11 Handling and shipping
5.4.1.4.1.12 Additional considerations
5.4.1.4.2 Detailing

5.4 Pretensioned Prestressed Concrete Beams

The design of the standard BTB-BTE beam series is based on the 2017 AASHTO LRFD Bridge Design Specifications, 8th Edition.

5.4.1 PPCB

[AASHTO-LRFD Section 5]

5.4.1.1 General

The standard BTB-BTE beams and procedures described in this article meet AASHTO LRFD Specifications, 8th Edition, with minor modifications. The standard beams were designed using Bentley LEAP Bridge Concrete (LBC) CE V21 (Version 21.00.00.24). The designer should review related manual articles for decks [BDM 5.2], deck drains [BDM 5.8.4], railings [BDM 5.8.1], haunches [BDM 5.3], and bearings [BDM 5.7].

5.4.1.1.1 Policy overview

The Bureau-designed BTB-BTE standard bulb tee beams are available from approved fabricators. These standard beams are designed for simple span conditions and may be used for continuous span conditions without special analysis, provided that the use is within standard design and detailing conditions. The designer will need to check reinforcement in the deck at piers for nonstandard conditions [BDM 5.4.1.4.1.7]. Note that the use of the bulb tees in skewed structures may require wider abutment and pier caps to accommodate the wide flanges.

The Bureau assembles pretensioned prestressed concrete beam (PPCB) superstructures for short- to intermediate-span bridges from the standard beams. Each beam shape, BTB through BTE, is fabricated to a single depth in a series of standard lengths. Thus, the designer may select a beam shape to fit a range of spans between substructure components. With few exceptions, the maximum permissible beam spacing is 9.25 feet for the BTB-BTE beams. The complete set of standard beams is summarized in Table 5.4.1.1.1.

Table 5.4.1.1.1. Standard bulb tee pretensioned prestressed concrete beams designed for HL-93 loading

Beam Shape	BSB Standard Sheets		Span Range, feet	Depth, inches	Maximum Spacing feet
	Beams	Intermediate Diaphragms			
BTB	4750-4767	1036-1-BTB, 1036-2-BTB	30.00 to 105.00	36	9.25 (1)
BTC	4700-4719	1036-1-BTC, 1036-2-BTC	30.00 to 120.00	45	9.25 (1)
BTD	4730-4748	1036-1-BTD, 1036-2-BTD	50.00 to 135.00	54	9.25 (1)
BTE	4770-4790	1036-1-BTE, 1036-2-BTE	60.00 to 155.00	63	9.25 (1)

Table notes:

(1) Maximum spacing is reduced for the longest beams: BTB100, BTB105, BTC115, BTC120, BTD135, BTE150, and BTE155. See standard sheets for spacing limits.

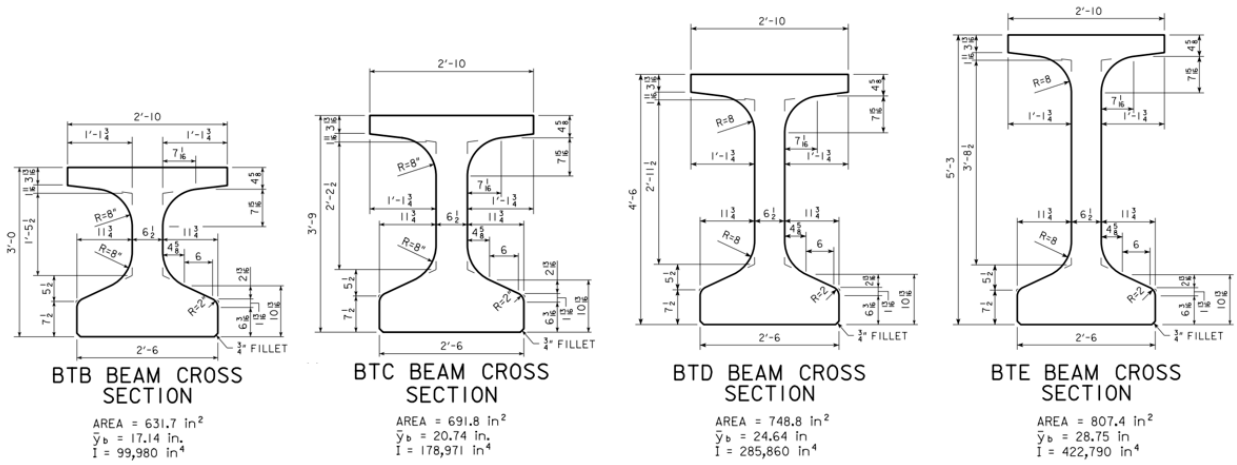

Figure 5.4.1.1.1. BTB to BTE beam shapes

Guidelines in this article [BDM 5.4.1] are provided to document the design criteria for the standard bulb tee beam shapes and for designing modified beams. When the designer changes the concrete strength, strand pattern, debonding requirements, or length of a standard beam, the designer shall designate the beam with an “S” to identify it as a beam that has been modified sufficiently to require special fabrication. For example, a BTD60 with a modified strand pattern should be designated SBTD60. The designer also shall note the special condition with the bid item. If a standard beam is changed in an unusual way, the designer should consult with the supervising Unit Leader for guidance.

At a minimum, designers shall use LBC software to check standard and non-standard PPCB designs used in projects. Standard LBC input files are available on the Iowa DOT website and may be used as a starting point in the checking process.

5.4.1.1.2 Design information

In the Bureau, for individually designed bridges the Preliminary Bridge Design Unit selects the standard bulb tee beam shape and locations of substructure components to fit the site and the spans available. The designer should check the preliminary design (or type, size, and location, commonly called the TS&L) with the goal of verifying the beam selection and determining the need for modifications. Occasionally a standard beam will need to be specially redesigned for nonstandard lengths, wide beam spacing, non-uniform beam spacing, or staged construction.

Considerable design and detail data for the standard bulb tee shapes are given on standard sheets [BDM Table 5.4.1.1.1]. It is Bureau policy to include in a set of bridge plans the applicable standard beam sheets corrected to remove all information that does not apply to the project.

The Iowa DOT Construction and Materials Bureau Instructional Memorandum “Precast and Prestressed Concrete Bridge Units” [CMB IM 570] and Appendices contain information on beam repair, cold weather placement, combined beam pours, and quality control. The memo is available from the Construction and Materials Bureau and is available on the Iowa Department of Transportation web site (http://www.iowadot.gov/erl/current/IM/Navigation/index_number.htm).

5.4.1.1.3 Definitions

[AASHTO-LRFD 3.3.2]

Standard bulb tee refers to the BTB-BTE beam shapes.

Unit Leader is the supervisor of the Bridges and Structures Bureau Preliminary Bridge Design Unit, Final Design Unit, or Consultant Coordination Unit.

5.4.1.1.4 Abbreviations and notation

[AASHTO-LRFD 3.3.2, 3.10.4.2]

BTB, BTC, BTD, BTE, standard bulb tee beam shapes
LBC, LEAP Bridge Concrete (formerly LEAP CONSPAN)**,** commercial software by Bentley for analysis and design of precast and prestressed beams for bridges.
d, distance from compression face to centroid of tension reinforcement
DC1, non-composite dead load of structural components and nonstructural attachments such as beams, deck, haunches, and diaphragms [AASHTO-LRFD 3.3.2].
DC2, composite dead load of structural components and nonstructural attachments such as barrier rails, sidewalks, curbs, and medians that are not part of the initial deck pour [AASHTO-LRFD 3.3.2].
DL, combined dead load
DW, dead load of wearing surfaces and utilities [AASHTO-LRFD 3.3.2].
$\mathbf{E_1}$, modulus of elasticity of material to be transformed to the concrete in a pretensioned prestressed concrete beam
$\mathbf{E_2}$, modulus of elasticity of concrete in a pretensioned prestressed concrete beam
$\mathbf{f'_c}$, specified 28-day concrete compressive strength
$\mathbf{f'_{ci}}$, specified compressive strength of concrete at time of initial prestress
GUTS, guaranteed ultimate tensile strength
IM, dynamic load allowance (also live load impact)
L, span length center to center of bearings
LL, live load
LRFD, load and resistance factor design

n, modular ratio, E_1/E_2
PPCB, pretensioned prestressed concrete beam
S, notation for a modified standard bulb tee beam
S_{D1}, horizontal response spectral acceleration coefficient at 1.0-sec. period modified by long-period site factor [AASHTO-LRFD 3.10.4.2]
TS&L, type, size, and location
VPD, vehicles per day, which includes traffic in both directions

5.4.1.1.5 References

American Society for Testing and Materials (ASTM). "A416/A416M-18, Standard Specification for Low-Relaxation Seven-Wire Steel Strand for Prestressed Concrete." ASTM International. West Conshohocken, PA.

Barker, R.M. and J.A. Puckett. *Design of Highway Bridges, An LRFD Approach, Third Edition.* New York: John Wiley and Sons, Inc., 2013.

Gheitanbaf, E.H., J. Nervig, W. He, S. Sritharan, and J.M. Rouse. *Improving Accuracy of the Camber Predictions for Precast Prestressed Concrete Bridge Girders.* IHRB Project TR-625, July 2015. (Available on the Internet at: https://publications.iowa.gov/20447/15/IADOT_TR_625_InTrans_Honarvar_Improving_Camber_Predictions_Precast_Pretensioned_Concrete_Beams_Final_2015.pdf)

Lin, T.Y. and Ned H. Burns. *Design of Prestressed Concrete Structures, Third Edition.* New York: John Wiley and Sons, 1981.

Nilson, Arthur H. *Design of Prestressed Concrete, Second Edition.* New York: John Wiley and Sons, 1987.

Construction and Materials Bureau. *Construction Manual.* Ames: Construction and Materials Bureau, Iowa Department of Transportation. (Available on the Internet at: https://iowadot.gov/erl/current/CM/Navigation/nav.htm)

Construction and Materials Bureau. *Precast and Prestressed Concrete Bridge Units, Materials Instructional Memo 570.* Ames: Iowa Department of Transportation. (Available on the Internet at: https://iowadot.gov/erl/current/IM/navigation/Index.htm)

Precast/Prestressed Concrete Institute (PCI). *Precast Prestressed Concrete Bridge Design Manual.* Chicago: PCI, (MNL-133-14) 3rd Ed., 2nd Release, Aug 2014.

Precast/Prestressed Concrete Institute (PCI). *PCI Design Handbook, Eighth Edition.* Chicago: PCI, (MNL-120-17) 2021.

Precast/Prestressed Concrete Institute (PCI). *Recommended Practice for Lateral Stability of Precast, Prestressed Concrete Bridge Girders*. Chicago: PCI, (CB-02-16) 2016.

5.4.1.2 Loads

There are many loads applied to the superstructure and transmitted to the substructure. The articles that follow discuss the typical loads that affect the design of the superstructure, but the designer shall consider the full range of loads. The designer should consult the pier article [BDM 6.6] for a more complete discussion of loads.

5.4.1.2.1 Dead

The Bureau classifies dead load as follows.

- DC1 is noncomposite dead load including beams, deck, haunches, and diaphragms.

- DC2 is composite dead load including barrier rails, sidewalks, curbs, and medians that are not part of the initial deck pour.
- DW is composite dead load of wearing surfaces and utilities.

The deck weight that is part of DC1 shall be distributed to each beam assuming that the deck between beams is simply supported and all the deck weight of an overhang is distributed to the exterior girder.

For a typical PPCB bridge the Bureau requires a future wearing surface load of 0.020 ksf, which is part of the DW load.

For two course decks the designer shall consider the second course as DC2 load, rather than DW load, because it will be placed under relatively controlled conditions by the bridge contractor, therefore the use of the lower DC2 load factor is justified.

For superstructures with roadway widths no greater than 44 feet, DC2 and DW shall be distributed equally to all beams.

For superstructures with roadway widths greater than 44 feet, the future wearing surface shall be distributed equally to all beams. Each barrier rail and raised sidewalk cast after the deck along the edge of the superstructure shall be distributed one-half to the exterior beam, one-quarter to the first interior beam, and one-quarter to the second interior beam. Note that the preceding policy is different from the policy for design of pier cap cantilevers [BDM 6.6.2.1].

The standard BTB-BTE beams were designed using the LBC software. The input and output files for each standard beam design are posted on the BSB website. Each standard beam design satisfies both exterior and interior beam design requirements and may be used in either location for bridges meeting the standard design assumptions.

- Most of the BTB-BTE beam designs are based on a superstructure cross-section model with an out-to-out deck width of 44 feet, roadway width 40.834 feet, a 5-beam cross-section with 9.25 feet beam spacings, and 3.50 feet deck overhangs. Some of the longest spans for the BTB-BTE shapes required narrower beam spacings and had the geometrical input adjusted accordingly.
- The distance from gutter line to edge of deck is 1.583 feet for the BTB-BTE beams.
- The DC1 deck load is distributed to each beam as described previously. The deck load for interior portions of the deck is based on an 8.50-inch thickness. The deck load for the exterior overhangs is based on a 10-inch thickness at the edge of deck and an 11-inch thickness at the edge of the top flange.
- The DC1 haunch load is based on a 1.50-inch thick haunch for the BTB-BTE beams.
- Intermediate steel diaphragms are located along the span per BDM 5.4.1.4.2 with each diaphragm resulting in a 0.500 kip DC1 point load for the BTB-BTE interior beams. Diaphragm loads for exterior beams are half the interior beams.
- A DC2 rail weight of 0.590 klf, based on the 44-inch tall MASH TL-5 single slope rail, was conservatively applied. The rail weight was distributed such that each beam in the cross-section carries the equivalent of one-half a rail. This conservative approach was incorporated to better address narrow bridges and staged construction scenarios.
- The FWS load of 0.020 ksf is applied over the roadway width and is equally distributed to all 5 beams in the cross-section as a DW load.

5.4.1.2.2 Live

[AASHTO-LRFD 3.6.1.2, C3.6.1.2.1, 3.6.1.3, C3.6.1.3.1, 3.6.1.6, 4.6.2.2]

Unless special requirements govern the design, vehicular live load (LL) for PPCB superstructures shall be HL-93 [AASHTO-LRFD 3.6.1.2]. It shall be applied as discussed in the AASHTO LRFD Specifications [AASHTO-LRFD 3.6.1.3].

The Strength II load combination which relates to owner-specified special design vehicles and evaluation permit vehicles is not ordinarily considered [AASHTO-LRFD 3.4.1]. In unusual situations identified by the Chief Structural Engineer, where a bridge will experience a high percentage of truck traffic, accumulation of trucks due to traffic flow control, or special industrial loads, the designer will need to consider additional loading as discussed in the AASHTO LRFD Specifications commentary [AASHTO-LRFD C3.6.1.2.1, C3.6.1.3.1]. In these situations, the designer shall consult with the Chief Structural Engineer.

Sidewalk and other live loads shall be added to the superstructure live load when applicable. A pedestrian load (PL) of 0.075 ksf shall be applied to all sidewalks [AASHTO-LRFD 3.6.1.6] and considered simultaneously with the vehicular live loads.

Distribution of live load to interior and exterior beams shall be as given in the AASHTO LRFD Specifications [AASHTO-LRFD 4.6.2.2]. The interior and exterior beams shall typically have the same capacity and any exceptions must be approved by the Chief Structural Engineer. For skewed bridges the designer shall use the shear increase [AASHTO-LRFD 4.6.2.2.3c] but not the moment reduction [AASHTO-LRFD 4.6.2.2.2e]. The designer shall not use the analysis based on the conventional approximation of loads on piles when determining exterior beam live load distribution factors for prestressed beam bridges [AASHTO-LRFD 4.6.2.2.2d and Commentary]. The standard BTB-BTE beams were designed for a shear increase based on a 60-degree skew [AASHTO-LRFD 4.6.2.2.3c].

5.4.1.2.3 Dynamic load allowance

[AASHTO-LRFD 3.6.2.1]

The static effects of the design truck or tandem, other than centrifugal and braking forces, shall be amplified by the dynamic load allowance (IM) given in the AASHTO LRFD Specifications [AASHTO-LRFD 3.6.2.1].

5.4.1.2.4 Earthquake

[AASHTO-LRFD 3.10.3.1, 3.10.4.2, 3.10.6, 3.10.9.2, 4.7.4.1, 4.7.4.4]

Based on the acceleration coefficient S_{D1}, all of Iowa with Site Class A through E shall be classified as Seismic Zone 1 [AASHTO-LRFD 3.10.3.1, 3.10.4.2, 3.10.6]. Thus, for typical bridges no seismic loading (EQ) or analysis is required [AASHTO-LRFD 4.7.4.1]. However, for unusual projects such as bridge sites determined to be Site Class F and for Missouri River and Mississippi River bridges the designer shall determine the seismic zone and perform seismic analysis as required by the AASHTO LRFD Specifications.

Typical continuous PPCB bridges with integral abutments, standard fixed pier connections, and/or standard steel reinforced elastomeric bearings do not require design for seismic connection forces. However, the designer should review bridges with deck expansion joints, bronze plate bearings, fixed shoe bearings, rocker bearings, and special bearings for the need to design for seismic connection forces [AASHTO-LRFD 3.10.9.2 and BDM 5.7.2.6]. At deck expansion joints there also will be a need to check bearing seat widths [AASHTO-LRFD 4.7.4.4].

5.4.1.2.5 Construction

[AASHTO-LRFD 6.10.3]

For a typical superstructure constructed with the standard bulb tee beams, the designer will not need to check constructability. The contractor is responsible for ensuring stability of beams from the time of beam placement up through the deck reaching full 28-day strength [BDM CADD NOTE E202]. The standard bulb tee beams were checked for the following construction loads on the exterior beam. The loading condition assumes the wet deck concrete has been poured from one end of the span to midspan. (Note that a loading condition assuming the wet deck concrete has been poured over the full span length was determined not to control the constructability checks.) All vertical loads were applied to the non-composite

exterior beam and any effects due to load eccentricity were not included. The Service I, Service III, and Strength I load combinations were considered. Load factors for the Service I and Service III load combinations are 1.00 whereas the load factors for the Strength I load combination are listed with each bullet.

- Dead load of exterior beam using a 1.25 load factor.
- Dead load of wet deck and haunch concrete to exterior beam [BDM 5.4.1.2.1] using a 1.25 load factor. This load is applied from the start of the span to midspan.
- Dead load of permanent diaphragm(s) to exterior beam [BDM 5.4.1.2.1] using a 1.25 load factor.
- Dead load of forms: 0.010 ksf on the tributary area of the deck width with a 1.50 load factor. This load is applied to the full span length.
- Dead load of edge rail and walkway at the edge of the deck form: 0.075 klf [IDOT SS 2403.03, L, 4, d.] with a 1.25 load factor. This load is applied to the full span length.
- Construction live load on walkway: 0.050 ksf [IDOT SS 2403.03, L, 4, e.] on a 2'-4" wide walkway with a 1.50 load factor. This load is applied to the full span length.
- Construction live load on deck: 0.050 ksf [IDOT SS 2403.03, L, 4, e.] on the tributary area of the deck width with a 1.50 load factor. This load is applied from midspan to end of span.
- Live load of finishing machine located along the edge of the deck form: 9.4 kips with a 1.50 load factor. The load is placed as 4 individual point loads of 2.35 kips each. The point loads are spaced as follows 2'-4'-2' with the second point load located at the center of the span.

For any unusual conditions, the designer shall check construction loads [AASHTO-LRFD 2.5.3, 3.4.2]. The designer shall consider the deck pouring sequence in the design of the beams for constructability (see BDM 5.2.4.1.2). Typically, during construction the exterior beam supports the deck overhang by means of an overhang bracket. The bracket transfers to the exterior beam both vertical and lateral loads that are dependent on the bracket shape. As part of a constructability check the designer shall consider these construction loads to the exterior beam. A Strength III combination with wind loads [IDOT SS 2403.03, L, 4, g.] may also be appropriate.

For most bridge projects it is assumed that construction can take place without cranes, construction vehicles, construction equipment, and concentrated quantities of construction materials on the bridge in addition to the loads listed above. If, however, the contractor does need to place additional loads on the bridge larger than those permitted by the Standard Specifications [IDOT SS 1105.12, D], the contractor will be required to submit structural analysis by an Iowa-licensed engineer for approval. Thus, the bridge designer may be required to review construction loading after letting of the bridge contract.

5.4.1.3 Load application to superstructure

5.4.1.3.1 Load modifier

[AASHTO-LRFD 1.3.2, 3.4.1]

Load factors shall be adjusted by the load modifier, which accounts for ductility, redundancy, and operational importance [AASHTO-LRFD 1.3.2, 3.4.1]. For typical PPCB bridges with at least three parallel beams the load modifier shall be taken as 1.0. For typical staged construction scenarios the load modifier may be taken as 1.0 when two or more beams carry staged traffic.

5.4.1.3.2 Limit states

[AASHTO-LRFD 2.5.2.6.2, 2.5.3, 3.4.1, 3.4.2, 5.5.3.1, 5.9.2.2, 5.9.2.3.1, 5.9.2.3.2]

The standard beams have been checked for compression and tension stresses at transfer (before losses) [AASHTO-LRFD 5.9.2.3.1]. The designer shall perform those checks for modified beams.

For the typical PPCB bridge superstructure, the designer shall consider the following limit states after losses for beam design [AASHTO-LRFD 3.4.1].

- Strength I, superstructure with vehicles but without wind

- Service I, superstructure with vehicles (Although the Service I limit state includes design 3-second gust wind speed at 70 mph, wind normally is not included in beam design under this limit state. In unusual cases where wind on a beam or PPCB superstructure should be investigated the designer shall use the Strength III and Strength V limit states.)
- Service III, tension in the prestressed concrete superstructure with respect to crack control [The Service III limit state load factor for live load (γ_{LL}) was taken as 0.80 for the design of the standard PPCB beams (AASHTO-LRFD Table 3.4.1-4). Note that Iowa has historically used and continues to use the approximate estimate of time-dependent losses as found in AASHTO LRFD 5.9.3.3 in conjunction with transformed section properties.]
- Fatigue

Usually Strength III (superstructure without vehicles but with design 3-second gust wind speed at 115 mph), Strength IV (superstructure with very high dead load to live load ratios), and Strength V (superstructure with vehicles and with design 3-second gust wind speed at 80 mph) will not control for the typical completed bridge, and the designer may use experience with typical PPCB bridges to avoid detailed checking of these three limit states. For long span and other non-typical bridges, the designer shall fully consider all appropriate limit states.

For the standard beams in a typical bridge, or for modified beams designed as fully prestressed members with tensile stresses within the limits of Service III limit state, the designer need not investigate the fatigue limit state [AASHTO-LRFD 5.5.3.1].

The designer shall consider all appropriate service and strength limit states during construction [AASHTO LRFD 2.5.3, BDM 5.4.1.2.5].

Load combinations and load factors for limit states and stress limits for service limit states are given in the AASHTO LRFD Specifications [AASHTO-LRFD 3.4.1, 3.4.2, 5.9.2.2, 5.9.2.3.2].

5.4.1.4 BTB-BTE beams

Analysis, design, and detailing information in this article is provided primarily to document the conditions under which the standard bulb tee beams were designed and to provide guidelines for design of modified beams. However, for the standard beams some of the information will be useful, such as the information under analysis assumptions, for applying superstructure loads to the substructure.

5.4.1.4.1 Analysis and design

[AASHTO-LRFD Section 5]

The designer shall use the LRFD method for design of modified standard beams and superstructures [AASHTO-LRFD Section 5].

For PPCB bridge deck guidelines, see the moment article [BDM 5.4.1.4.1.7].

For diaphragms, see the detailing article [BDM 5.4.1.4.2].

5.4.1.4.1.1 Analysis assumptions

[AASHTO-LRFD 5.9.4.3.1]

For service and strength limit states, a standard bulb tee is checked conservatively in a simple span condition for all loads and is considered noncomposite for DC1 and composite for DC2, DW, live load, and dynamic load allowance. As the PPCB superstructure is assembled in the field, the addition of the deck changes the structural behavior of the beams. The continuity resulting from placement of the deck affects both deflection of the beams and the loads transmitted to the substructure. For the standard shapes the Bureau makes the span and load distribution assumptions given in Table 5.4.1.4.1.1.

Table 5.4.1.4.1.1. Assumptions for design of BTB-BTE beams and loads to the substructure

Load	Theoretical Span and Composite Conditions	Bureau Practice Span and Composite Conditions			
		Beam Strength and Service Limit States	Beam Deflections	Abutment Loads	Pier Loads
DC1	Simple Noncomposite	Simple Non-composite	Simple Non-composite	Simple Non-composite	Simple Non-composite
DC2 and DW(1)	Continuous Composite	Simple(2) Composite	Continuous Composite	Continuous Composite	Continuous Composite(3)
Live Load and Dynamic Load Allowance	Continuous Composite	Simple(2) Composite	Continuous Composite	Continuous Composite	Continuous Composite(3)

Table notes:

(1) For beam, bearing, and pier frame design, DW and DC2 are distributed equally to all beams for roadway widths less than or equal to 44 feet. For wider bridges, the future wearing surface (DW) is distributed equally to all beams, and each barrier rail load (DC2) is distributed half to the exterior beam and one-quarter to each of the adjacent two interior beams [BDM 5.4.1.2.1]. A different, conservative policy applies for pier cap cantilever design. The future wearing surface is distributed equally to all beams, and all barrier rail load is distributed only to the exterior beams [BDM 6.6.2.1].

(2) Bureau policy is to design beams using the simple span condition for all strength and service stress checks and add longitudinal reinforcement to the concrete deck above continuous pier supports to avoid deck joints and control tension cracking. The intent is to meet the exception discussed in the AASHTO LRFD Specifications for simple spans detailed for continuity [AASHTO LRFD 5.12.3.3.1, C5.12.3.3.1]. However, the longitudinal reinforcement and continuity diaphragms will cause the superstructure to behave approximately as a continuous structure, and that condition should be assumed for deflections and abutment and pier loads.

(3) Moment of inertia is to be taken as constant over the length of the bridge.

Prestress is assumed to be fully effective at the transfer length of 60 strand diameters from the point where bonding commences which is at the end of a pretensioned beam for fully bonded strands and at the end of the debonding length for a partially debonded strand [AASHTO-LRFD 5.9.4.3]. For the usual 0.6-inch diameter strand, 60 diameters is a distance of 36 inches.

For design of BTB-BTE beams the deck haunch is assumed to be 1.50 inches for weight and 0.50 inch for composite section calculations.

For the design of nonstandard beam spacings or arrangements the distance from gutter to centerline of exterior beam should be set at 1.92 feet for BTB-BTE beams.

5.4.1.4.1.2 Materials

[AASHTO-LRFD C5.4.2.4, 5.4.3.2, 5.4.4.2]

Concrete strengths for the standard pretensioned prestressed concrete beams shall be as specified in Tables 5.4.1.4.1.2-1.

Table 5.4.1.4.1.2-1. Concrete specifications for standard BTB-BTE pretensioned prestressed concrete beams

Beam Type	BSB Standard Sheet	f'_{ci}, ksi (1)	f'_c, ksi	
			Beam (2)	Deck
BTB30-BTB65	4750	4.5	5.0	4.0
BTB70	4750	5.0	5.5	4.0
BTB75	4750	5.5	6.5	4.0
BTB80	4750	6.0	7.0	4.0
BTB85	4750	6.5	7.5	4.0
BTB90	4750	7.5	8.5	4.0
BTB95	4750	8.0	9.5	4.0
BTB100	4765	8.0	10.0	4.0
BTB105	4765	8.5	10.0	4.0
BTC30-BTC60	4700	4.5	5.0	4.0
BTC65-BTC75	4700	5.0	6.0	4.0
BTC80-BTC90	4700	6.0	7.0	4.0
BTC95	4700	6.5	7.5	4.0
BTC100	4700	7.0	8.0	4.0
BTC105	4700	7.5	8.5	4.0
BTC110	4700	7.5	9.0	4.0
BTC115	4700	7.5	9.5	4.5
BTC120	4719	8.0	10.0	4.5
BTD50-BTD70	4730	4.5	5.0	4.0
BTD75-BTD85	4730	5.0	6.0	4.0
BTD90-BTD95	4730	5.5	6.5	4.0
BTD100-BTD105	4730	6.0	7.0	4.0
BTD110	4730	6.5	7.5	4.0
BTD115-BTD120	4730	7.0	8.0	4.0
BTD125	4730	7.5	8.5	4.0
BTD130	4730	7.5	9.0	4.0
BTD135	4748	8.0	9.5	4.0
BTE60-BTE75	4770 (Sheet 1 of 2)	4.5	5.0	4.0
BTE80-BTE110	4770 (Sheet 1 of 2)	5.0	6.0	4.0
BTE115-BTE120	4770 (Sheet 1 of 2)	5.5	6.0	4.0
BTE125-BTE130	4770 (Sheet 1 of 2)	6.5	7.5	4.0
BTE135	4770 (Sheet 1 of 2)	7.0	8.0	4.0
BTE140	4770 (Sheet 1 of 2)	7.5	8.5	4.0
BTE145	4770 (Sheet 1 of 2)	7.5	9.0	4.0
BTE150	4770 (Sheet 1 of 2)	7.5	9.5	4.5
BTE155	4790 (Sheet 1 of 2)	8.0	10.5	4.5

Table notes:

(1) For modified beams, the designer should generally try to limit f'_{ci} to 7.5 ksi or less but may increase f'_{ci} up to 8.0 ksi as needed. An f'_{ci} of 8.5 ksi is only used for the BTB105 and may only be used for other beam designs with the approval of the Chief Structural Engineer.

(2) For modified beams, f'_c shall normally be limited to 10.0 ksi. With approval of the supervising Unit Leader, f'_c may be increased to 10.5 ksi.

The BTB-BTE beams were designed to try and limit f'_{ci} to 7.5 ksi or less by first using deflected strands and then debonding strands if needed. Concrete release strengths of 7.5 ksi or less allow for more efficient beam production since less time is required to remove the beams from the casting beds so that

production can begin on a new set of beams. For some beams an f'_{ci} of 8.0 ksi was required to meet the minimum standard beam spacing requirements for the standard roadway widths. The standard BTB105s required an f'_{ci} of 8.5 ksi to meet the minimum standard beam spacing requirements for the standard roadway widths.

The modulus of elasticity for pretensioned prestressed concrete beams shall be based on a concrete weight of 0.150 kcf. This weight is larger than given in the AASHTO LRFD Specifications [AASHTO-LRFD C5.4.2.4] to account for the higher density of precast beam concrete.

For the usual Class C deck concrete the 28-day compressive strength shall be taken as 4.0 ksi unless the beam design requires a higher strength. Reinforcing steel shall be Grade 60, with a minimum yield strength of 60 ksi. Modulus of elasticity for reinforcing shall be taken as 29,000 ksi [AASHTO-LRFD 5.4.3.2].

Prestressing strands shall be ASTM A416 Grade 270 low relaxation, with the properties listed in Table 5.4.1.4.1.2-3.

Table 5.4.1.4.1.2-3. Low relaxation prestressing strand data for design

Nominal Diameter, inches	Nominal Area, in^2	Ultimate Tensile Strength, kips	Maximum Initial Prestress (1), kips	Modulus of Elasticity (2), ksi
½ (3)	0.153	41.300	---	28,500
0.6	0.217	58.600	43.950	28,500

Table notes:

(1) The maximum initial prestress value in the table for design is 75% of guaranteed ultimate tensile strength (GUTS). The Bureau prefers that the limit be set lower, at approximately 72.6% of GUTS, so that the fabricator can make adjustments that do not require additional cost for stressing strands at cold temperatures. During fabrication Iowa DOT policy allows for temporary prestressing increases to a maximum stress not exceeding 80% of the minimum ultimate tensile strength [IDOT SS 2407.03, G, and AASHTO-LRFD-CS 10.10.2].

(2) For design of the standard beams the Bureau has used this modulus of elasticity suggested in the AASHTO LRFD Specifications [AASHTO-LRFD 5.4.4.2]. For cold weather stressing adjustments, a fabricator may use a value based on data supplied by the strand manufacturer [CMB IM 570, Appendix C].

(3) These ½-inch strands are to be used for lifting loops only. All stressed prestressing strands in the standard beams shall be 0.6 inches in diameter.

5.4.1.4.1.3 Design resistance and stress limits

[AASHTO-LRFD 5.9.2.3.1, 5.9.2.3.2]

Design resistance shall be determined in accordance with the AASHTO LRFD Specifications.

Temporary stress limits for beams at transfer (before losses) shall be as follows [AASHTO-LRFD 5.9.2.3.1].

- Compression: $0.65f'_{ci}$ [AASHTO-LRFD 5.9.2.3.1a]
- Tension: $0.24\lambda(f'_{ci})^{0.5}$ where $\lambda = 1.0$ for normal weight concrete [AASHTO-LRFD Table 5.9.2.3.1b-1]. All standard beams shall satisfy the requirements for bonded reinforcement to resist the tensile force in the concrete assuming an uncracked section.

Stress limits for service limit states (after losses) shall be as follows [AASHTO-LRFD 5.9.2.3.2].

- Compression, Service Limit State Load Combination I: [AASHTO-LRFD Table 5.9.2.3.2a-1]
  - $0.45f'_c$ for PS + DL
  - $0.60\phi_w f'_c$ for PS+DL+(LL+IM) where $\phi_w = 1.0$
    Note: DL includes DC1, DC2, and DW loads for both cases.

- Tension, Service Limit State Load Combination III: $0.19\lambda(f'_c)^{0.5} \leq 0.60$ ksi where $\lambda = 1.0$ for normal weight concrete [AASHTO-LRFD Table 5.9.2.3.2b-1]. All standard beams are assumed to be subject to not worse than moderate corrosion conditions.

Stress limits for fatigue limit state (after losses) shall be as follows [AASHTO-LRFD 5.5.3].

- Compression, Fatigue Limit State Load Combination I: [AASHTO-LRFD 5.5.3.1]
  - $0.40f'_c$ for $0.50*(PS + DL)+LL_{fatigue}$

Stress limits for noncomposite beams (after losses) due to construction loads taken from BDM 5.4.1.2.5.shall be as follows.

- Compression, Service Limit State Load Combination I: $0.45f'_c$ [AASHTO-LRFD Table 5.9.2.3.2a-1]
- Tension, Service Limit State Load Combination III: No tension in the bottom flange.

5.4.1.4.1.4 Section properties

[AASHTO-LRFD 4.6.2.6.1, 5.6.1]

For calculating stresses at the service limit state in a pretensioned prestressed concrete beam the designer should utilize the transformed section including all fully stressed strands. For any partially debonded straight strands, the portion of the strand that is debonded at the beam ends should not be considered in the transformed section properties over the debonded length because the debonded strand is not composite with the beam. Strands should be transformed to PPCB concrete using the modular ratio for each steel material [AASHTO-LRFD 5.6.1].

For estimating camber using LBC, the designer shall use the transformed section option. Do not transform mild longitudinal bars or strands stressed to not more than 5 kips which are substituted for mild longitudinal bars in the top flange. LBC lumps total strand area at the center of gravity of the strands when determining transformed section properties.

For deflection computations the designer should use properties of the transformed cross section.

For determining composite section properties the deck thickness shall be reduced by 0.75 inches to account for the built-in wearing surface. The effective deck width shall be determined in accordance with AASHTO LRFD Specifications for effective flange width [AASHTO-LRFD 4.6.2.6.1] and considering the reduced deck thickness.

For calculating stresses in composite sections in positive moment regions the designer shall transform the deck concrete (but not the reinforcement) to beam concrete using the modular ratio for deck concrete and the effective flange width for tee beams [AASHTO-LRFD 4.6.2.6.1]. Within negative moment regions the designer shall consider only the beam section and deck reinforcing to be effective in resisting negative moment.

5.4.1.4.1.5 Deflected strands and debonded straight strands

Deflected (harped) strands and partially debonded (shielded) straight strands are used primarily to keep the stresses at the ends of a beam within limits at transfer while utilizing increased prestressing force in the beam. Deflected strands and partially debonded straight strands generally need to be used only in longer beams. Deflected strands and partially debonded straight strands may be used in the same beam, but Iowa prefers to first use deflected strands before including partially debonded straight strands. The number of deflected strands generally should be limited to 25 to 33% of the total number of strands. Debonding limits for strands shall be based on AASHTO LRFD 5.9.4.3.3 from the 2017, 8th edition and supplemented by 2020, 9th edition as follows.

- The number of partially debonded strands should not exceed 25% of the total number of strands.
- The number of debonded strands in any horizontal row shall not exceed 40% of strands in that row.

- Debonding shall not be terminated for more than six strands in any given section. When a total of ten or fewer strands are debonded, debonding shall not be terminated for more than four strands in any given section.
- Longitudinal spacing of debonding termination locations shall be at least 60 diameters apart.
- Debonded strands shall be symmetrically distributed about the vertical centerline of the member cross-section. Debonding shall be terminated symmetrically at the same longitudinal location.
- Alternate bonded and debonded strand locations both horizontally and vertically.
- The debonding length from the beam end should be limited to 20% of the span length or one-half the span length minus the development length, whichever is less.
- Bond all strands within the horizontal limits of the web.
- Position debonded strands furthest from the vertical centerline except bond the outer-most strands in all rows.
- Deflected strands shall be fully bonded.

Deflected strands increase the shear strength near beam ends and should be considered when determining shear reinforcement. Partially debonded straight strands at the beam ends decrease the shear strength near the beam ends and should be considered when determining shear reinforcement.

Deflected strands in the standard bulb tee beams are shown on standard sheets with hold down points at 0.40L from each beam end. The beam fabricator has the option of moving the hold down points 0.05L toward the beam ends. Therefore, for modified beams the designer shall investigate beam stresses for hold down points at each of the 0.35L and 0.40L locations. At a beam end the center of gravity of the deflected strand group is permitted a vertical tolerance of $\pm$ 1 inch. The designer shall investigate beam stresses for the strand group at each of the extreme tolerances.

The Bureau prefers to use a minimum debonding length of 6 feet for each debonded strand at the beam ends to better verify through measurement that debonding has been achieved at the fabrication plant per CMB IM 570. However, for the BTB105 beams it was decided to allow a 3-foot debonded strand length for a portion of the debonded strands and use 6 feet for the remaining debonded strands since by code not all strands could be debonded at the same section. Designers shall consult with the Chief Structural Engineer when debonding lengths shorter than 6 feet are required by design.

Fabricators prefer not to debond any strands in the bottom row to avoid contact between the sheathing and the stirrups as contact may compromise the sheathing. Check with the Chief Structural Engineer prior to specifying debonding any strands in the bottom row.

Partially debonded straight strands at beam ends are included for standard beams BTB95, BTB100, BTB105, BTC115, BTC120, BTD130, BTD135, and BTE150. CMB IM 570 specifies the requirements for the plastic slit sheathing used to achieve partial strand debonding at the beam ends.

5.4.1.4.1.6 Prestress losses

[AASHTO-LRFD 5.9.3]

Prestress losses shall be determined in accordance with specific AASHTO provisions for elastic shortening, creep, shrinkage, and relaxation [AASHTO-LRFD 5.9.3]. The designer shall use the approximate method for the time-dependent losses [AASHTO-LRFD 5.9.3.3].

When the designer transforms strands to beam concrete, the designer should neglect loss of concrete stress due to elastic shortening because the loss automatically will be included in the computations. The elastic shortening loss in the strands, however, shall be computed and considered, as applicable, for all other prestress losses.

5.4.1.4.1.7 Moment

[AASHTO-LRFD 5.6.3.3]

For service limit state checks, beam stresses shall be computed from moments determined for span and composite conditions given under analysis assumptions [BDM Table 5.4.1.4.1.1]. Beam stresses shall be checked under transfer and service limit states at all critical sections including the following:

- Transfer (60 strand diameters from beam end),
- Hold-down for deflected strands, and
- Midspan.

Factored flexural resistance in the positive moment regions for the Strength I Limit State check and constructability check is determined in accordance with AASHTO-LRFD 5.6, however, the strain compatibility approach [AASHTO-LRFD 5.6.3.2.5] is not used for the standard beam designs.

The minimum amounts of prestressing and reinforcing steel in beams shall meet the limits in the AASHTO LRFD Specifications [AASHTO-LRFD 5.6.3.3]. The limits for maximum amounts of prestressing and reinforcing steel in beams were removed from AASHTO in 2005, with the effects of an over-reinforced (compression-controlled) section accounted for by a reduction in the resistance factor.

Where the superstructure is detailed for continuity above a pier, reinforcement in the deck shall be designed for Strength I negative moments due to live load with impact, future wearing surface, curbs and rails, and any other load applied after the deck has cured. Note, however, the exception in (3) below. Moments due to creep and shrinkage after continuity is achieved shall not be considered.

Standard sheets for PPCB bridge decks [BSB SS 4380-BTB-4 to 4385-BTE-6, 4556-BTC-4 to 4561-BTE-6] have the correct negative moment reinforcing for the span lengths available with standard PPCBs. Per BDM 5.8.5.3 when 60 ksi No. 9 bars are required in the top and bottom of the deck in the negative moment regions the designer has the option to substitute 80 ksi No. 8 bars to reduce congestion. For typical bridges that make use of the deck standard sheets the designer need not check deck reinforcement, but for greater spans or wider, nonstandard beam spacings the designer shall check the need for additional deck reinforcement and add reinforcement as necessary.

In cases where it is necessary to check deck reinforcement above piers the designer shall proceed as follows:

(1) Determine the distribution steel and spacing.
(2) Add negative moment reinforcement between the distribution steel. Start by adding steel to the top layer, and add to the bottom layer only if more steel is required. See Figure 5.4.1.4.1.7.
(3) For negative moment reinforcement use bars no larger than #9. In extreme cases this bar size limit and the placement limits in (2) may result is less steel than required for Strength I negative moment, and the Bureau will accept that condition on a case-by-case basis. Contact the Chief Structural Engineer for approval.
(4) Terminate the top and bottom layer negative moment reinforcement at the eighth points of the spans, which generally will be the locations of permissible concrete deck construction joints.
(5) Do not check concrete compression due to continuity.
(6) For unusual superstructures contact the Chief Structural Engineer.

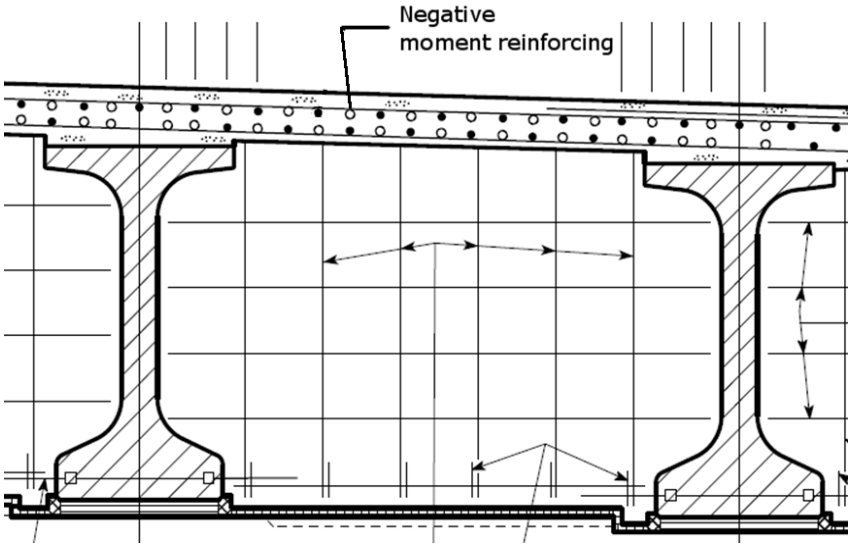

Figure 5.4.1.4.1.7. Negative moment reinforcement above piers

5.4.1.4.1.8 Shear

[AASHTO-LRFD 5.7.3, 5.7.4]

Web shear reinforcement shall be designed in accordance with AASHTO LRFD Specifications [AASHTO-LRFD 5.7.3]. The vertical component of the deflected strand prestressing force should be included, if present, when calculating beam shear strength. Partially debonded straight strands at the beam ends decrease the shear strength near the beam ends and should be considered, if present, when calculating beam shear strength.

For a standard beam, Bureau practice is to gradually increase web shear reinforcement spacing from the anchorage zones to points at about 0.25 to 0.35 of the beam length and then use a constant spacing, as determined by design requirements, for the center portion of the beam.

The designer shall investigate horizontal shear between the precast beam and cast-in-place deck and shall provide tie reinforcement in accordance with AASHTO LRFD Specifications [AASHTO-LRFD 5.7.4]. The total interface shear considered in the design of the standard beams includes contributions from all DC1, DC2, DW, and LL loads. The top flange of the beam is to be struck off level and intentionally roughened in the transverse direction to a full amplitude of 0.25 inch. ~~except for a 2-inch wide finish along one edge of the flange [CMB IM 570]. The strip with the smooth finish is intended to aid in taking elevations during construction.~~ The standard beams shall conservatively deduct~~ed~~ an assumed 2-inch wide smooth finish along both edges of the flange when evaluating interface shear.

5.4.1.4.1.9 Deflection and camber

[AASHTO-LRFD 2.5.2.6.2, 2.5.2.6.3, 3.6.1.1.2]

The minimum beam depth plus haunch plus composite deck thickness (less wearing surface) generally should be at least one twenty-fifth of the span length (0.04L) [AASHTO-LRFD 2.5.2.6.3] for continuous spans. Span lengths for BTB beams meet this criterion to 91 feet, BTC beams meet this criterion to 110 feet, BTD beams meet this criterion to 129 feet, and BTE beams meet this criterion to 147 feet [BDM Table 5.4.1.1.1]. Although the longest bulb tee beams fail to meet the depth criterion, they are adequate for the load and maximum spacing conditions under which they were designed. Other shallow beam conditions shall be approved by the supervising Unit Leader.

The Bureau requires the designer to check deflection according to the AASHTO LRFD criteria [AASHTO-LRFD 2.5.2.6.2]. When computing deflections the designer shall use the number of 12-foot wide design traffic lanes that fit on the roadway with the applicable multiple presence factor for three or more lanes [AASHTO-LRFD 3.6.1.1.2]. Live load plus dynamic load allowance shall be distributed equally to all beams.

Preferably the deflection for live load plus dynamic load allowance should not exceed L/1000, but in no case shall the deflection exceed L/800. For bridges that carry pedestrian traffic the deflection for live plus dynamic load allowance shall not exceed L/1000. If live plus dynamic load allowance deflection controls the design, the designer shall consult with the supervising Unit Leader.

For estimating deflection and camber, the designer should use the section properties recommended in a previous article [BDM 5.4.1.4.1.4].

Iowa State University (ISU) has completed research addressing camber prediction and camber measurement. BDM 5.4.1.1.5 contains the research report reference. Changes to initial (at-release) camber and final (at-erection or after-losses) camber due to recommendations from the research report are incorporated into the PPCB standard sheets.

The flowchart in Figure 5.4.1.4.1.9 illustrates the camber deflection multipliers applied to the theoretical instantaneous camber calculation from LBC in order to determine initial and final beam cambers. The initial camber deflection multipliers are used to correct instantaneous camber calculations for differences between the minimum specified initial concrete compressive strength in the plans and the average initial compressive strength measured at the plant. (Camber is influenced directly by the concrete modulus of elasticity which is, in turn, computed from the concrete strength.) PPCBs with minimum specified initial strengths of 6 ksi or less will, on average, have significantly larger actual initial strengths. PPCBs with minimum specified initial strengths of more than 6 ksi have only moderately higher actual initial strengths. The final camber deflection multipliers are applied to the initial camber (i.e. modified instantaneous camber). The final multipliers account for the effects of creep which bring about camber growth. The magnitude of the initial camber determines which final camber deflection multiplier to apply. The final multipliers assume camber growth occurring over a period of 120 days with temporary blocking at L/30 from the beam ends where L is total beam length. Initial and final camber values are based on beams supported at their ends. BDM C5.4.1.4.1.9 contains a camber calculation example that closely approximates the method used in LBC for the determination of instantaneous camber and also illustrates the use of the camber deflection multipliers.

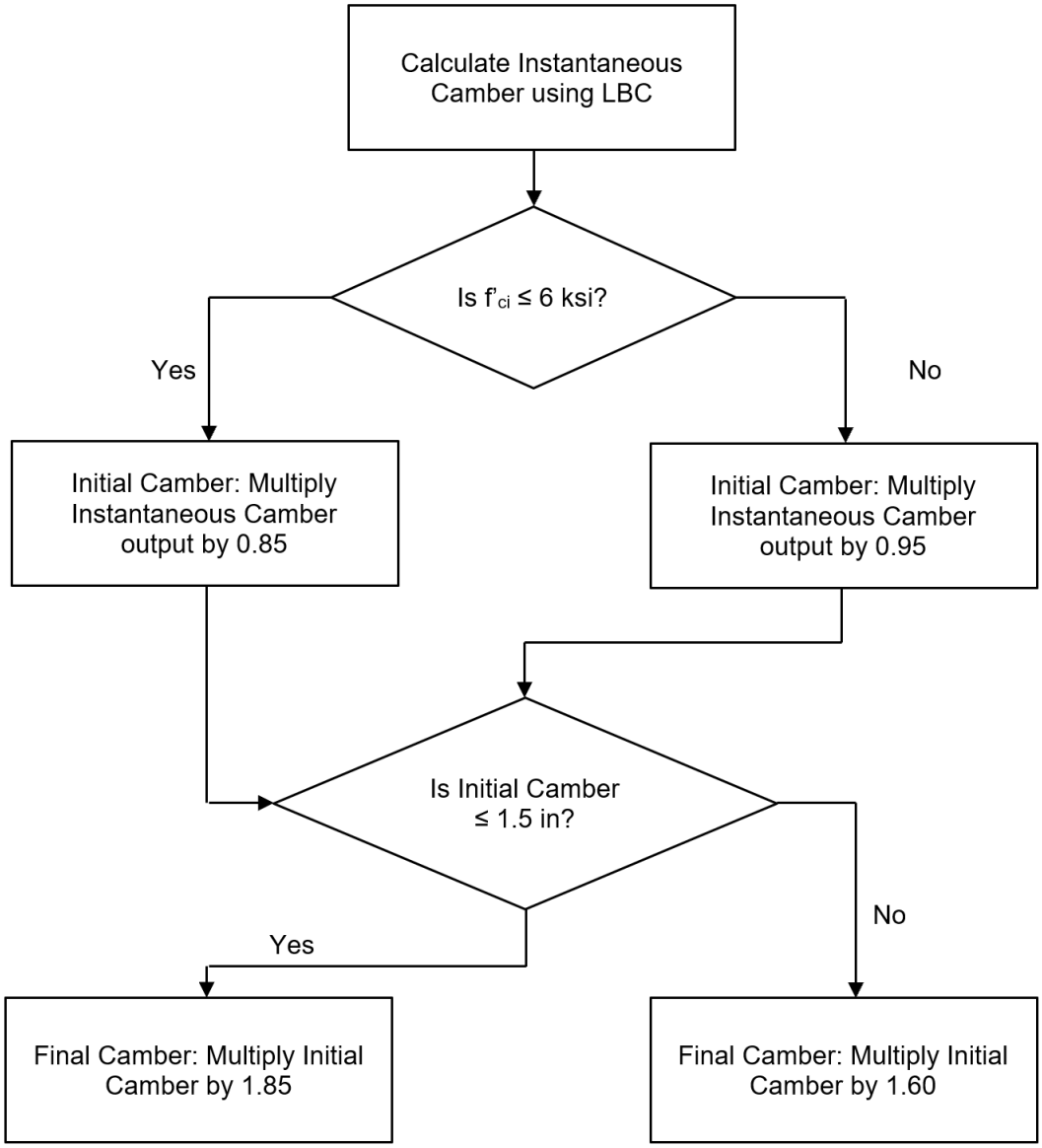

Figure 5.4.1.4.1.9. Initial and Final Camber Determination

Each standard sheet for a beam shape lists data for camber and deflection. The designer should note the loads used for the standard beam deflection computations and the continuity adjustments for long-term deflections. Long-term deflections are adjusted with multipliers as follows:

- 1 for simple spans,
- ¾ for end spans of a continuous bridge, and
- ½ for interior spans of a continuous bridge.

5.4.1.4.1.10 Anchorage zone

[AASHTO-LRFD 5.9.4.4]

Anchorage zone reinforcing shall comply with AASHTO LRFD Specifications for bursting resistance in pretensioned anchorage zones [AASHTO-LRFD 5.9.4.4.1]. The LBC software reports on anchorage zone (splitting resistance) requirements, but does not explicitly flag non-compliant designs, therefore, users need to carefully review that these requirements have been met. Prestress force in strands which are

debonded in the anchorage zone may be neglected. Prestress force in bonded straight and deflected strands in the anchorage zone shall be included.

5.4.1.4.1.11 Handling and shipping

Top flanges of beams shall be designed with longitudinal reinforcing bars to resist tension due to prestressing, lifting overhangs, and shipping overhangs. The beam design shall permit the fabricator to substitute prestressing strands for top flange reinforcing bars and shall be detailed on the plans. With the strand substitution, each 0.6-inch strand shall be tensioned to a maximum of 5 kips. Note that the substitution need not be on a one-to-one basis, as indicated on the standard bulb tee sheets.

For nonstandard beams the designer shall investigate the lateral stability of the beam with the maximum allowable lateral sweep of L/80 [CMB IM 570] when the beam is supported at the lifting points. An acceptable procedure is given in PCI's *Precast Prestressed Concrete Bridge Design Manual* and *Recommended Practice for Lateral Stability of Precast, Prestressed Concrete Bridge Girders* [BDM 5.4.1.1.5].

The designer shall determine the maximum permissible shipping overhang for the service limit state and note the overhang on the beam plan. For standard BTB-BTE beams the permissible overhang may be taken from Table 5.4.1.4.1.11-1.

Table 5.4.1.4.1.11-1. Permissible shipping overhangs for standard BTB-BTE beams

Beam	Maximum Permissible Overhang, feet	Temporary Bracing (1)	BSB Standard Sheet (3)
BTB30-BTB75	5% of beam length (2)	---	4750
BTB80-BTB85	5	---	4750
BTB90	7.5	---	4750
BTB95	11	---	4750
BTB100-BTB105	11.5	Yes	4765
BTC30-BTC75	5% of beam length (2)	---	4700
BTC80-BTC95	11	---	4700
BTC100-BTC110	12	Yes	4700
BTC115	14	Yes	4700
BTC120	14	Yes	4719s1
BTD50-BTD90	5% of beam length (2)	---	4730
BTD95	10	---	4730
BTD100	9	---	4730
BTD105	11	---	4730
BTD110-BTD115	11	Yes	4730
BTD120-BTD130	14	Yes	4730
BTD135	16	Yes	4748s1
BTE60-BTE90	5% of beam length (2)	---	4770s2
BTE95-BTE120	10	---	4770s2
BTE125-BTE135	14	Yes	4770s2
BTE140-BTE150	16	Yes	4770s2
BTE155	16	Yes	4790s1

Table notes:

(1) The contractor shall assure the lateral stability of the beams during handling, transporting, and erection by providing temporary bracing as needed.
(2) The Standard Specifications [IDOT SS 2407.03, K, 1] limit the overhang length to 5% of beam length unless the length is specifically given in contract documents.
(3) Beams shall achieve final 28-day concrete strength (f'_c) as specified on the standard beam sheets prior to shipping.

For shipping overhangs not listed in the tables the designer shall check service limit state stresses at the assumed support location and the hold-down point for the draped strands. The following conditions shall be used for the checks.

- At the support location, use the beam dead load plus 100% for dynamic load allowance.
- At the hold-down location, use the beam dead load without dynamic load allowance. Assume a 10-foot overhang at the opposite end of the beam.

For overhang checks the designer shall use the following stress limits (which generally are not stated in the AASHTO LRFD Specifications).

- Tension in reinforcing bars: $0.50f_y$
- Tension in prestressing strand: $0.70f'_s$
- Compression in concrete after losses: $0.60f'_c$
- Tension in concrete: maximum of $0.237(f'_c)^{1/2}$ ksi. Where calculated tension stress exceeds 0.200 or $0.0948(f'_c)^{1/2}$ ksi bonded reinforcing shall be provided to resist the total tension force in the concrete computed for an uncracked section.

5.4.1.4.1.12 Additional considerations

In Construction and Materials Bureau Instructional Memorandum “Precast and Prestressed Concrete Bridge Units” [CMB IM 570, Appendix D] beam fabricators are given an option for stressing and anchoring prestressing strands during cold weather. The option, however, seldom needs to be considered during design.

For special beams the Bureau may need to investigate permissible fabricating options after the project is let. Approvals for fabricating options are routed to the Chief Structural Engineer.

5.4.1.4.2 Detailing

[AASHTO-LRFD 5.9.4.1, 5.10.1, 5.14]

Bid item codes for the beams are consistent. For example, the code for a BTD 115 is “Beams, Pretensioned Prestressed Concrete, BTD115”.

When the designer alters a standard beam’s concrete strength, strand pattern, debonding requirements, or length, the designer shall designate the beam as special with an “S.” The designer also shall use a special bid item (e.g. “Beams, Pretensioned Prestressed Concrete, SBTD115”) and note the reason for the “S” designation in the bid item reference list. The special designation should not be used for beams that have modified stirrup lengths, but the designer shall provide a note regarding the altered stirrup lengths in the bid item reference list.

For bridges with skews greater than 30 degrees, the wide flanges of BTB-BTE beams may pose detailing problems. In those cases, the flanges may be chamfered more than the standard 2 inches. If it appears that extra chamfering or other special cutting is necessary, the designer shall consult with the supervising Unit Leader.

Except for unusually severe exposures, clear cover over stirrups shall be 1.0 inch minimum, and clear cover over prestressing strands and main reinforcing bars shall be 1.5 inch minimum. These amounts of cover follow past Bureau practice and generally are within the limits set by the AASHTO LRFD Specifications [AASHTO-LRFD 5.14.3 & 5.10.1].

Exceptions to the cover rules given above are the reduced cover at a one-half inch thick beam seat protection plate and at a 1.0-inch thick curved sole plate [BSB SS 4541]. For special beams the designer may reduce cover for a curved sole plate provided that the plate is not thicker than 1.0 inch.

Center-to-center spacing of 0.6 inch strands shall be a minimum of 2.0 inches [AASHTO-LRFD 5.9.4.1].

Lifting points and lifting loop details shall be included as shown on the standard beam sheets.

Shipping hold-down details consisting of two tie-down holes at each end of the beam may be cast into the web using sleeves up to 3 inches in diameter for BTD and BTE beams. The centerline of the holes shall be a minimum of 15 inches below the top flange of the beam and shall be 2 inches clear of any strands. The location of the tie down holes shall follow the beam overhang limits shown on the standard beam sheets. See CMB IM 570 Appendix J for more information. Tie-downs over the top of the top flanges on the taller BT beams have led to concrete damage at the flange edges during shipping. The shipping tie-down holes in the web avoid the issue.

All mild reinforcement in the standard beams has lap and development lengths based on requirements for epoxy-coated bars. The beam standards note that fabricators may elect to use epoxy-coated reinforcing for all mild reinforcement in the beams. At a minimum and as shown in the standards, the beam stirrups that extend into the deck must be epoxy-coated.

If deck hangers are embedded in PPCBs they shall be coated for protection [IDOT SS 2412.03, A, 2].

At integral abutments and at fixed piers with plain neoprene pad bearings, no special end bearing details are required to be cast in the beam ends. At expansion piers and fixed piers where the beam bears on a steel pintle plate or masonry plate, then curved sole plates must be cast in beam ends. Typical sole plate details are given on a standard sheet [BSB SS 4541].

Except where a curved sole plate is required, fabricators have permission to add a 1/2-inch thick steel beam seat protection plate with ¾-inch diameter welded studs in each end of a standard beam [CMB IM 570, Appendix H and H1]. The plate prevents damage to the beam end when strands are released and the beam cambers upward at transfer.

Coil ties to provide continuous transverse reinforcement are required at all abutments and at all pier diaphragms. See standard sheets for number and locations.

At a concrete end diaphragm some of the prestressing strands are to be cut with projections and shop-bent to hook into the cast-in-place diaphragm. Locations of the strands to be bent and dimensions of the hooks are given on standard beam detail sheets. All debonded strands shall be cutoff flush with the beam ends and shall not be embedded into the pier or abutment diaphragm.

Seal the openings between debonded strands and sheathing before coating of the beam ends per the plans and CMB IM 570.

At expansion joints in PPCB superstructures, beam ends shall be sealed [CMB IM 570], and the designer shall note the requirement on the plans. The ends shall be sealed in the fabrication yard and again in the field when the beam seats are sealed [BDM 6.5.4.1.2]. BSB SS 4542-BTCDE to 4548-BTCDE detail the concrete sealer limits.

For all BTB-BTE standard beams with spans up to and including 120 feet use one steel diaphragm at midspan. For BTD and BTE standard beams with spans greater than 120 feet, two diaphragms are required at 20 feet on each side of the center of the beam. For skews of 7.5 degrees or less the diaphragms are to be skewed; for larger skews, diaphragms are to be perpendicular to the beams and staggered as shown on the standard sheets. At any location below a longitudinal bridge deck construction joint, the bolts for a steel intermediate diaphragm shall not be tightened until stage two of the bridge deck has been placed.

For bridges constructed with BTB-BTE standard beams, the deck overhang should be 3.50 feet from centerline of beam. The overhang allows about 2-inches clearance between a 4-inch deck drain and the edge of the bulb tee flange.

When preliminary design indicates that the design or lesser flood at a bridge site would extend above the bottom flanges of beams, during a flood the superstructure will be subjected to uplift from the trapped air between beams. In that case the preliminary design (or type, size, and location, commonly called the TS&L) will have a recommendation for venting of the superstructure. The designer shall provide vent holes in beam webs, 2 inches in diameter, about 14 inches below the top of the top flange, and at the third points of beam length, as shown on Figure 5.4.1.4.2. The holes may be provided with a removable or non-removable form. Locations of the holes may be shifted slightly to avoid interference with reinforcing.

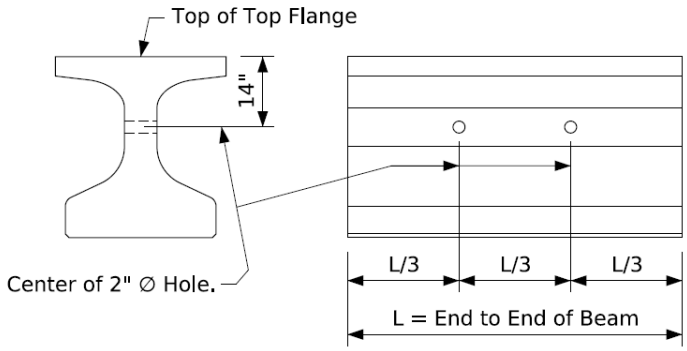

NOTE: 2" ∅ holes to be provided in every prestressed beam.
2" ∅ holes may be produced with a removable or non-removable form.
They may be shifted slightly as needed to avoid interference with reinforcing, strands, and diaphragm connections.

Figure 5.4.1.4.2. Vent hole detail

C5.4 Pretensioned Prestressed Concrete Beam

July 2025 ~ PPCB Updates

The Bureau has removed designs of the A-D beams from the manual. State projects no longer use these beams. The signed H40 and H44 three span PPCB H-standards, which are based on the A to D beams, are no longer used for state projects. These beam standards were eliminated due lack of use in bridge projects. The last version of the A to D beams was based on the 2017 AASHTO LRFD Bridge Design Specifications, 8th Edition.

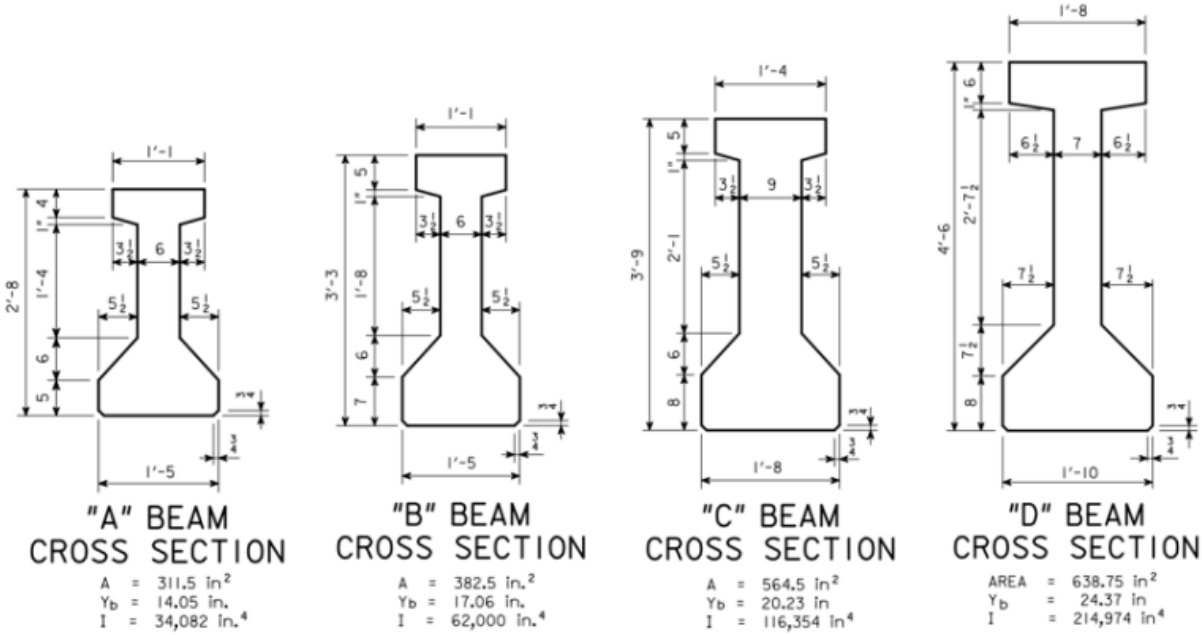

Figure C5.4.1. A to D beam shapes

August 1, 2023 ~ PPCB Updates

The Bureau has updated the designs of the A-D and BTB-BTE beams to meet the AASHTO LRFD Specifications, 8th Edition, 2017. These designs and checks have been performed with LBC (LEAP CONSPAN) software. To meet design requirements, some partial strand debonding was introduced for some of the longer BT beams.

Commentary Prior to August 1, 2023 ~ PPCB Updates

The Bureau has redesigned the LXA-LXD, I-shapes to create an A-D beam series that meets the AASHTO LRFD Specifications, and the series has been updated to the fourth edition. The Bureau also has checked and updated the BTC and BTD shapes to the fourth edition and designed and updated the additions to the BT-series, BTB and BTE, to the fourth edition. These designs and checks have been performed with CONSPAN software. All PPCB superstructures and supporting substructures are to be designed by LRFD, and that method has been used to design the transverse reinforcement and the longitudinal deck reinforcement above piers on standard sheets.

This article now covers only the PPCB LRFD superstructure types. The transition to the AASHTO LRFD Specifications is complete, and the Standard Specifications article, which covered standard I and bulb tee shapes used in structures during and since the 1990s, has been withdrawn. The recent series of beams and their status are summarized in Table 5.4.

Table C5.4. Pretensioned prestressed concrete beam series, AASHTO design specifications, and series status

Beam Series	AASHTO Specification	Series Status
LXA-LXD	Standard, 14th Edition	Replaced by A-D series
AM-DM	Standard, 15th Edition	Not to be maintained, for metric projects only
BT	Standard, 15th Edition	Not to be maintained
BTM	Standard, 15th Edition	Not to be maintained, for metric projects only
BTB-BTE	LRFD, 4th Edition	Current
BTCM-BTDM	LRFD, 2nd Edition	Not to be maintained, for metric projects only
A-D	LRFD, 4th Edition	Current, replaces LXA-LXD series

C5.4.1.3.2 Limit states

2011 ~ Strength V Limit State During Construction and Other Revisions

Based on the description in the AASHTO LRFD Specifications of the Strength V limit state it seemed that it was not intended to be checked during construction. However, a steel plate girder example by M.A. Grubb and R.E. Schmidt distributed nationally by the U.S. Department of Transportation (USDOT) and National Steel Bridge Alliance (NSBA) includes Strength V during construction. The description of Strength V notes: "…plus 1.35 times the design live load (or any temporary live loads acting on the structure when evaluating the construction condition), plus 0.4 times the wind load on the structure, plus 1.0 times the wind on the live load. For evaluating the construction condition under the STRENGTH V load combination, the load factor for temporary dead loads that act on the structure during construction is not to be taken less than 1.25 and the load factor for any non-integral wearing surface and utility loads may be reduced from 1.5 to 1.25." Based on the example and other sources it is clear that Strength V should be checked during construction when appropriate, and articles in the design manual have been revised with respect to construction limit states. (There are several other changes, also.) The steel example is available at the following URL:

http://www.virginiadot.org/business/resources/SteelDesignExample.pdf

C5.4.1.4.1.6 Moment

15 March 2012

In the past the Iowa DOT has designed PPCB superstructures by designing the beams for simple spans and detailing for continuity but then also checking the beams in the continuous condition. Generally, the beams and deck were adequate for all continuity checks near and at a pier. With development of longer beams, however, service checks at the transfer points and compression checks for negative moment at continuity diaphragms began to fail under some conditions. It also was difficult to place enough tension reinforcement in the deck. As a result, the Bureau has decided not to check the continuous condition for concrete compression, taking full advantage of the exception for simple spans in the AASHTO LRFD Specifications [AASHTO-LRFD 5.12.3.3.1].

In order to avoid construction difficulties, the Bureau is limiting the reinforcing in the deck so that longitudinal bar spacing is not too close and bars are not too large. In unusual cases these limitations may result in less reinforcement in the deck than would be required for the negative moment at the strength limit state. The Bureau is willing to accept that condition on a case-by-case basis and intends to monitor field performance.

The continuity condition above a pier during service is difficult to determine accurately. Under typical Iowa DOT procedures and specifications, the designer has minimal control over the age of beams at the time the pier diaphragm and deck are poured. Effects of creep and shrinkage after the superstructure is continuous also are difficult to quantify even when the age of beams is known. Generally, creep and shrinkage effects are relieved at ultimate conditions by concrete cracking and mild reinforcement yielding, and therefore the Bureau considers the exceptions noted above to be reasonable, and the exceptions are permissible under the AASHTO LRFD Specifications.

C5.4.1.4.1.9 Deflection and camber

1 January 2015

The following example is intended to illustrate CONSPAN's camber calculation procedure and to demonstrate the use of the recommended camber deflection multipliers from the ISU camber research project. BDM 5.4.2.1.5 contains the research report reference. The prestressed beam standards will be updated to reflect the new camber values at some point in the future.

<u>BTE145 Camber Calculation Example</u>
End to End Beam Length = 146.333 ft
Harp Location = (0.35)*(146.333 ft) = 51.217 ft – assume harp points shifted 0.05*L towards beam ends
Beam Height = 63 in
Gross Beam Area = 807.4 in^2
Gross Beam Inertia = 422,790 in^4
Gross Beam C.G. = 28.750 in from bottom of beam
Concrete Unit Weight = 0.150 kcf
Initial Concrete Strength, f'_{ci} = 7.5 ksi
Initial Concrete Modulus, E_{ci} = (33,000)*((0.150 kcf)$^{1.5}$)*(7.5 ksi)$^{0.5}$ = 5250.3 ksi
28-day Concrete Strength, f'_c = 8.5 ksi
28-day Concrete Modulus, E_c = (33,000)*((0.150 kcf)$^{1.5}$)*(8.5 ksi)$^{0.5}$ = 5589.3 ksi
Strand Diameter, d_b = 0.60 in
Strand Area, A_p = 0.217 in^2
Strand Transfer Length = 60*d_b = (60)*(0.60 in) = 36 in
Strand Modulus, E_p = 28,500 ksi
Strand Ultimate Strength = 270 ksi
Strand Jacking Percentage = 72.6%
Modular Ratio, N = E_p/E_{ci} = (28,500 ksi))/(5250.2 ksi) = 5.428 – CONSPAN does not round N

Strand Layout (52 total strands, 42 straight strands, 10 draped strands)

Straight Strands:	12 strands at 2 inches from beam bottom
	12 strands at 4 inches from beam bottom
	12 strands at 6 inches from beam bottom
	6 strands at 8 inches from beam bottom
Draped Strands at Center:	2 strands at 2 inches from beam bottom
	2 strands at 4 inches from beam bottom
	2 strands at 6 inches from beam bottom
	2 strands at 8 inches from beam bottom
	2 strands at 10 inches from beam bottom
Draped Strands at Ends:	2 strands at 52 inches from beam bottom
	2 strands at 54 inches from beam bottom
	2 strands at 56 inches from beam bottom
	2 strands at 58 inches from beam bottom
	2 strands at 60 inches from beam bottom
Draped Strands at Transfer:	2 strands at 49.071 inches from beam bottom
	2 strands at 51.071 inches from beam bottom
	2 strands at 53.071 inches from beam bottom
	2 strands at 55.071 inches from beam bottom
	2 strands at 57.071 inches from beam bottom

Strand C.G. at Center = 4.846 in
Strand C.G. at Ends = 14.462 in
Strand C.G. at Transfer = 13.898 in

Transformed Beam Properties at Center:

A_t = 807.4 in^2 + (5.428 – 1)*(52 strands)*(0.217 in^2) = 857.4 in^2

Y_{bt} = ((807.4 in^2)*(28.750 in) + (5.428 – 1)*(52 strands)*(0.217 in^2)*(4.846 in)) / (857.4 in^2) = 27.357 in

I_t = 422,790 in^4 + (807.4 in^2)*(28.750 in - 27.357 in)^2 + (5.428 – 1)*(52 strands)*(0.217 in^2)*(27.357 in - 4.846 in)^2 = 449,677.9 in^4

Strand Force at Release, P_i = (52 strands)*(0.217 in^2)*(270 ksi)*(0.726) = 2211.9 kips

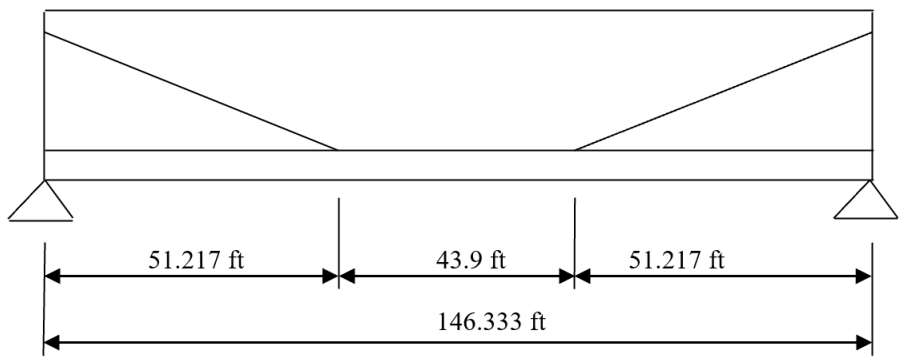

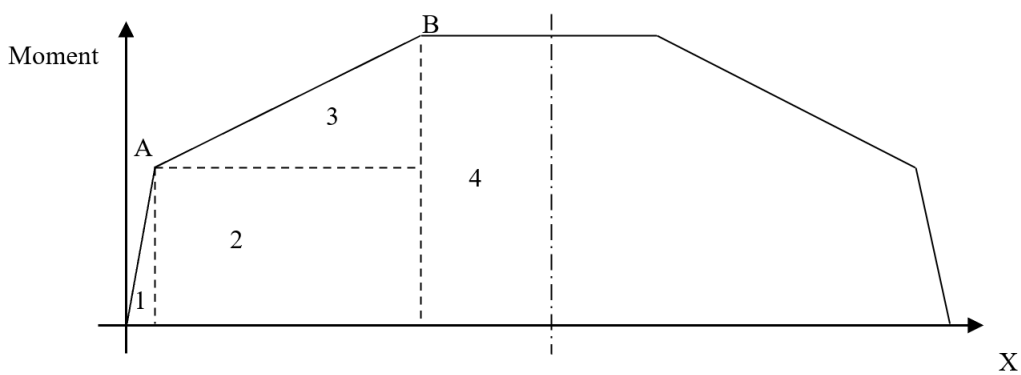

Moment-Area Method -- Point A is the transfer point, Point B is the harp point

M_A = (2211.9 kip)*(27.357 in – 13.898 in) = 29,768.77 kip*in

M_B = (2211.9 kip)*(27.357 in – 4.846 in) = 49,791.16 kip*in

Area		
1	(0.5)*(3 ft)*(29,768.77 kip*in)	= 44,653.160
2	(48.217 ft)*(29,768.77 kip*in)	= 1,435,347.539
3	(0.5)*(48.217 ft)*(49,791.16 kip*in – 29,768.77 kip*in)	= 482,705.305
4	(21.950 ft)*(49,791.16 kip*in)	= 1,092,913.560

Area * X		
1	44,653.160 * (2/3)*(3 ft)	= 89,306.319
2	1,435,347.539 * (3 ft + (0.5)*(48.217 ft))	= 38,909,795.803
3	482,705.305 * (3 ft + (2/3)*(48.217 ft))	= 16,964,372.225
4	1,092,913.560 * (51.217 ft + (1/4)*(43.900 ft))	= 67,969,961.002
Total		= 123,933,435.349 kip*in*ft^2

Center Deflection due to Prestress = (123,933,435.349 kip*in*ft^2)*(144 in^2/ft^2) / [(5250.3 ksi)*(449,677.9 in^4)]
= 7.559 in up

Center Deflection due to Self-Weight = 5wL^4 / 384EI = (5)*(0.841 klf)*(1/12 in/ft)*[(146.333 ft)*(12 in/ft)]^4 / [(384)*(5250.3 ksi)*(449,677.9 in^4)]
= 3.675 in down

Instantaneous Camber = 7.559 in – 3.675 in = 3.884 in, close to CONSPAN

Since f'_{ci} > 6 ksi, Initial Camber Deflection Multiplier = 0.95
Initial Camber = (0.95)*(3.884 in) = 3.690 in

Since Initial Camber > 1.5 in, Final Camber Deflection Multiplier = 1.60
Final Camber = (1.60)*(3.690 in) = 5.904 in

TABLE OF CONTENTS ~ STEEL GIRDERS AND BEAMS

5.5 Steel Girders and Beams
- 5.5.1 CWPG
  - 5.5.1.1 General
    - 5.5.1.1.1 Policy overview
    - 5.5.1.1.2 Design information
    - 5.5.1.1.3 Definitions
    - 5.5.1.1.4 Abbreviations and notation
    - 5.5.1.1.5 References
  - 5.5.1.2 Loads
    - 5.5.1.2.1 Dead
    - 5.5.1.2.2 Live
    - 5.5.1.2.3 Fatigue
    - 5.5.1.2.4 Dynamic load allowance
    - 5.5.1.2.5 Earthquake
    - 5.5.1.2.6 Construction
  - 5.5.1.3 Load application to superstructure
    - 5.5.1.3.1 Load modifier
    - 5.5.1.3.2 Limit states
  - 5.5.1.4 Plate girders
    - 5.5.1.4.1 Analysis and design
      - 5.5.1.4.1.1 Analysis assumptions
      - 5.5.1.4.1.2 Materials
      - 5.5.1.4.1.3 Design resistance
      - 5.5.1.4.1.4 Section properties
      - 5.5.1.4.1.5 Moment
      - 5.5.1.4.1.6 Flanges
      - 5.5.1.4.1.7 Lateral bracing
      - 5.5.1.4.1.8 Shear connectors
      - 5.5.1.4.1.9 Shear
      - 5.5.1.4.1.10 Web
      - 5.5.1.4.1.11 Stiffeners
      - 5.5.1.4.1.12 Deflection and camber
      - 5.5.1.4.1.13 Welded connections
      - 5.5.1.4.1.14 Bolted connections
      - 5.5.1.4.1.15 Fatigue
      - 5.5.1.4.1.16 Diaphragms and cross frames
      - 5.5.1.4.1.17 Horizontally curved superstructures
      - 5.5.1.4.1.18 Additional considerations
    - 5.5.1.4.2 Detailing
    - 5.5.1.4.3 Shop drawings
    - 5.5.1.4.4 Erection submittals and sequences
    - 5.5.1.4.5 Fracture critical members

5.5 Steel Girders and Beams

Continuous welded plate girders (CWPG) are designed for bridge projects that require features not available with reinforced or prestressed concrete structures.

For typical stream crossings, the Bureau has developed signed standard plans for weathering steel, three-span rolled beam bridges that meet the AASHTO LRFD Specifications. More information is given in the Preliminary section [BDM 3.2.6.1.5].

5.5.1 CWPG

5.5.1.1 General

[AASHTO-LRFD Section 6]

The design procedures described in this article meet AASHTO LRFD Specifications [AASHTO-LRFD Section 6] with minor modifications. The designer also should review related manual articles for decks [BDM 5.2], deck drains [BDM 5.8.4], railings [BDM 5.8.1], haunches [BDM 5.3], and bearings [BDM 5.7].

5.5.1.1.1 Policy overview

[AASHTO-LRFD 2.5.2.7, 6.7.4.1]

For bridges that require longer spans, shallower superstructures, or sharper horizontal curves than those available with pretensioned prestressed concrete beams (PPCBs), the Bureau usually selects weathering steel, continuous welded plate girder (CWPG) superstructures. All CWPG superstructures and substructures are to be designed by LRFD with HL-93 loading.

The Bureau does not have standard girder cross sections and therefore custom designs girders for each project. Because of continuity, span lengths generally are balanced to avoid uplift and other undesirable conditions. To avoid significant imbalance, the Bureau prefers that an end span be at least 60% of the length of the adjacent interior span.

Typical CWPG superstructures are designed with four or five plate girders and cross frame or K-frame diaphragms. For standard roadway widths, plate girders are spaced 8.25 feet to 10.25 feet apart as shown on standard sheets [BSB SS 4305-4310]. Larger girder spacings up to 12 feet are considered on a case-by-case basis. Both field-assembled cross frames on the standard sheets and alternate shop-assembled cross frames [BSB SS 4305A] are to be included in a typical plan set.

Although the AASHTO LRFD Specifications no longer limit diaphragm spacing [AASHTO-LRFD 6.7.4.1], the Bureau prefers that the permanent diaphragm spacing not exceed the previous AASHTO Standard Specifications maximum of 25 feet. Regardless of spacing the designer will need to evaluate the need for diaphragms at all stages of construction and at the final condition.

For economy and ease of fabrication, exterior and interior girders should use the same plate sizes. For future widening the exterior girder is required to have at least the same capacity as an interior girder [AASHTO-LRFD 2.5.2.7] and, for typical bridges, the Bureau prefers that the exterior and interior girders be the same. However, for major bridges there may be significant savings if interior girders and exterior girders are optimized individually. If it appears that there would be significant savings with different interior and exterior girder designs the designer shall consult with the supervising Unit Leader.

Unpainted weathering steel girders, regardless of bridge location, shall have a minimum 1/16-inch sacrificial thickness added to the minimum design thickness for all web and flange plates, including bolted field splice plates for girders. Secondary members (e.g. stiffeners, cross frames, etc.) are not required to have an additional sacrificial thickness.

Under the AASHTO Standard Specifications, with typical Iowa deck overhangs there was a greater load distribution to the interior girder than to the exterior girder, and thus the interior girder typically controlled the design. The AASHTO LRFD Specifications employ load distribution factors considering several parameters, and there are separate distribution factors for flexure and shear in exterior and interior girders. Typically, the exterior girder will control flexural and fatigue design while the interior girder will control shear design.

Girders typically are field spliced at approximate interior girder inflection points for dead load of structural components, nonstructural attachments, wearing surface, and utilities (DC1, DC2, and DW). However, for long span girders it may be more appropriate to locate field splices based on shipping length and weight.

In negative moment regions, top and bottom flanges are made the same size, but the flanges may be spliced and made thicker in the regions closest to piers. The designer is required to check the option of using the thicker flange plates throughout the negative moment region and to show the better design choice on the plans.

Because each stiffener has a significant cost, the Bureau recommends using partially stiffened girder webs to minimize the number of intermediate stiffeners, but the designer should consider economics carefully. In some situations, there may be an advantage to an unstiffened or a fully stiffened web. In any situation, the intermediate stiffener layout should be planned so that stiffeners also can serve as connectors for diaphragms or cross frames.

Continuous welded plate girder superstructures are more flexible under live load than typical concrete superstructures. To avoid serviceability problems, the designer should check deflection early in the design process.

The Bureau prefers that straight and curved CWPG superstructures be detailed by the fabricator for a steel dead load fit (SDLF). A no-load fit (NLF) is recommended for horizontally curved bridges where $(L/R)_{max}$ is greater than or equal to 0.2 where R is the radius at the bridge centerline and L is the bearing to bearing arc span length at the bridge centerline.

Unless otherwise noted, the provisions of this article are intended to apply to straight bridges. Curved bridges involve design conditions that require special consideration [BDM 5.5.1.4.1.17].

5.5.1.1.2 Design information

In the Bureau, the designer receives the preliminary design with the selection of the continuous welded plate girder superstructure type and locations of substructure components to fit site conditions. The designer should check any preliminary design (or type, size, and location, commonly called the TS&L) with a short span adjacent to a long span, and request substructure layout changes if the layout causes significant problems in the superstructure design.

Bridge cross sections for standard roadway widths and alternate, shop-assembled cross frames are given on standard sheets [BSB SS 4305-4310, 4305A]. Typical intermediate stiffener, intermediate diaphragm stiffener, and bearing stiffener details also are given on the standard sheet [BSB SS 1021]. If possible, the designer should use the latest versions of these standard sheets when preparing the design for a CWPG bridge.

For specification, material, or construction information beyond the information in this manual, the designer should consult the following sources. The publications are available from the Bureaus listed and are available on the Iowa Department of Transportation web site (http://www.dot.state.ia.us).

- Contracts and Specifications Bureau, *Standard Specifications for Highway and Bridge Construction* Articles 2408, 4152, and 4182.
- Construction and Materials Bureau, Instructional Memoranda 453.10 and 561-565
- Construction and Materials Bureau, *Construction Manual* and *New Bridge Construction Handbook*

5.5.1.1.3 Definitions

[AASHTO-LRFD 3.3.2]

Unit Leader is the supervisor of the Bridges and Structures Bureau Preliminary Bridge Design Unit, Final Design Unit, or Consultant Coordination Unit.

Tension control bolt has a splined end beyond the thread. The end will shear off at a calibrated pretension when installed with a special wrench. The Bureau permits use of the bolts for connections completed in the shop but not for field connections [BDM 5.5.1.4.1.14].

5.5.1.1.4 Abbreviations and notation

[AASHTO-LRFD 3.3.2, 3.10.4.2]

ADTT, average daily truck traffic in one direction
CVN, Charpy V-notch
CWPG, continuous welded plate girder
DC1, non-composite dead load of structural components and nonstructural attachments such as girders, deck, haunches, diaphragms, and cross frames [AASHTO-LRFD 3.3.2].
DC2, composite dead load of structural components and nonstructural attachments such as railings and sidewalks, curbs, and medians that are not part of the initial deck pour [AASHTO-LRFD 3.3.2].
DW, dead load of wearing surfaces and utilities [AASHTO-LRFD 3.3.2].
FCM, fracture critical member
K, effective length factor
LRFD, load and resistance factor design
OSHA, Occupational Safety and Health Administration
PPCB, pretensioned prestressed concrete beam
S_{D1}, horizontal response spectral acceleration coefficient at 1.0-sec. period modified by long-period site factor [AASHTO-LRFD 3.10.4.2]
TS&L, type, size, and location
VPD, vehicles per day, which includes traffic in both directions

5.5.1.1.5 References

AASHTO/NSBA Steel Bridge Collaboration. *Guidelines to Design for Constructibility and Fabrication, G 12.1-2020*. Chicago: AASHTO/NSBA Steel Bridge Collaboration, 2020.

American Association of State Highway and Transportation Officials (AASHTO). *AASHTO Guide Specifications for Horizontally Curved Highway Bridges.* Washington: AASHTO, 2003.

American Institute of Steel Construction (AISC). *Manual of Steel Construction, Allowable Stress Design, Ninth Edition.* Chicago: AISC, 1989. (This manual has correct information for weights of non-high-strength bolts.)

American Institute of Steel Construction (AISC). *Steel Construction Manual, 15th Edition.* Chicago: AISC, 2017.

American Society for Testing and Materials (ASTM). “A780, Standard Practice for Repair of Damaged and Uncoated Areas of Hot-Dip Galvanized Coatings.” West Conshohocken: ASTM.

American Welding Society (AWS). *Bridge Welding Code, AWS D1.5M/D1.5.* Miami: AWS.

Federal Highway Administration (FHWA). *Uncoated Weathering Steel in Structures, Technical Advisory T 5140.22.* Washington: FHWA, 1989.

Hartle, R.A., K.E. Wilson, W.A. Amrhein, S.D. Zang, J.W. Bouscher, and L.E. Volle. *LRFD Design Example for Steel Girder Bridge with Commentary.* Arlington: National Highway Institute, Federal Highway Administration, 2003.

HDR Inc. *LRFD Design Example, Steel Beam Bridge Design*. Omaha: HDR Inc., 2004.

Johnston, Bruce G., Editor. *Guide to Stability Design Criteria for Metal Structures, Third Edition.* New York: John Wiley and Sons, 1976. (Also, see later editions edited by Theodore V. Galambos and Ronald D. Ziemian.)

Knight, Richard P., “Economical Steel Plate Girder Bridges,” *Engineering Journal, AISC*, Vol. 21, No. 2, 1984, pp 89-93.

National Steel Bridge Alliance (NSBA). *Steel Bridge Design Handbook.* Chicago: NSBA, 2022 (Available on the Internet at https://www.aisc.org/nsba/design-and-estimation-resources/steel-bridge-design-handbook/.)

National Steel Bridge Alliance (NSBA). *Skewed and Curved Steel I-Girder Bridge Fit.* Fit Task Force, NSBA Technical Subcommittee, August 2016 (Available on the Internet at https://www.aisc.org/globalassets/nsba/technical-documents/skewed-and-curved-i-girder-bridge-fit-full-2016-revision.pdf)

Construction and Materials Bureau. *Construction Manual.* Ames: Construction and Materials Bureau, Iowa Department of Transportation, 2006. (Available on the Internet at: http://www.iowadot.gov/erl/current/CM/Navigation/nav.pdf)

Wiss, Janney, Elstner Associates, Inc.: D.D. Crampton, K.P. Holloway, J. Fraczek, *Assessment of Weathering Steel Bridge Performance in Iowa and Development of Inspection and Maintenance Techniques*, Final Report No. SPR 90-00-RB17-012, Iowa DOT and FHWA, 2013. (Available on the Internet at: http://publications.iowa.gov/14956/1/Iowa_Weathering_Steel_Final_Report_2-21-2013.pdf)

5.5.1.2 Loads

There are many loads applied to the superstructure and transmitted to the substructure. The articles that follow discuss the typical loads that affect the design of the superstructure, but the designer shall consider the full range of loads. The designer should consult the pier article [BDM 6.6] for a more complete discussion of loads.

5.5.1.2.1 Dead

The Bureau classifies dead load as follows.

- DC1 is noncomposite dead load including girders, deck, haunches, diaphragms, and cross frames.
- DC2 is composite dead load including railings and sidewalks, curbs, and medians that are not part of the initial deck pour.
- DW is composite dead load of wearing surfaces and utilities.

The deck weight that is part of DC1 shall be distributed to each girder assuming the slab between girders is simply supported and all of the deck weight of an overhang is distributed to the exterior girder.

During design of typical CWPG bridges, it may be assumed that the dead load of the steel girder is 15% larger than that computed for only the flanges and web. The 15% increase is intended to approximate the weight of what is sometimes termed as the miscellaneous steel weight. Miscellaneous steel weight refers to the weight of stiffeners, diaphragms, cross frames, connection plates, shear connectors, etc. Verifying the appropriateness of the miscellaneous steel weight assumption can be done during the final iterations of the design.

For a typical CWPG bridge the Bureau requires a future wearing surface load of 0.020 ksf, which is part of the DW load.

For two course decks the designer shall consider the second course as DC2 load because it will be placed under relatively controlled conditions by the bridge contractor.

For superstructures with roadway widths no greater than 44 feet, DC2 and DW shall be distributed equally to all girders.

For superstructures with roadway widths greater than 44 feet, the future wearing surface shall be distributed equally to all girders. Each railing and raised sidewalk cast after the deck along the edge of the

superstructure shall be distributed one-half to the exterior girder, one-quarter to the first interior girder, and one-quarter to the second interior girder.

5.5.1.2.2 Live

[AASHTO-LRFD 3.6.1.2, C3.6.1.2.1, 3.6.1.3, C3.6.1.3.1, 3.6.1.6, 4.6.2.2]

Unless special requirements govern the design, vehicular live load (LL) for CWPG superstructures shall be HL-93 [AASHTO-LRFD 3.6.1.2]. It shall be applied as discussed in the AASHTO LRFD Specifications [AASHTO-LRFD 3.6.1.3].

In unusual situations identified by the Chief Structural Engineer, where a bridge will experience a high percentage of truck traffic, accumulation of trucks due to traffic flow control, or special industrial loads, the designer will need to consider additional loading as discussed in the AASHTO LRFD Specifications commentary [AASHTO-LRFD C3.6.1.2.1, C3.6.1.3.1]. In these situations the designer shall consult with the Chief Structural Engineer.

Sidewalk and other live loads shall be added to the superstructure live load when applicable. A pedestrian load (PL) of 0.075 ksf shall be applied to all sidewalks wider than 2.0 feet [AASHTO-LRFD 3.6.1.6] and considered simultaneously with the vehicular live loads.

Distribution of live load to interior and exterior girders shall be as given in the AASHTO LRFD Specifications [AASHTO-LRFD 4.6.2.2]. For skewed bridges the designer shall use the shear increase [AASHTO-LRFD 4.6.2.2.3c] but not the moment reduction [AASHTO-LRFD 4.6.2.2.2e].

5.5.1.2.3 Fatigue

[AASHTO-LRFD 3.6.1.4]

The fatigue load shall be taken according to the AASHTO LRFD Specifications [AASHTO-LRFD 3.6.1.4].

Follow BDM 5.5.1.4.1.15 regarding the need to design for infinite fatigue life. Determine the ADTT as outlined below.

The Systems Planning Bureau determines the traffic estimates on the type, size, and location plan (TS&L) that becomes the situation plan in a set of bridge drawings. The traffic estimates always are for the number of vehicles traveling in both directions, even if the highway is divided. Therefore the designer shall determine the frequency of the fatigue load as follows:

(1) Using information on the situation plan for the bridge, multiply the future estimated vehicles per day (VPD) by the % Trucks/100 to determine the average daily truck traffic (ADTT) in both directions.
(2) Multiply the ADTT from (1) by 0.6 to estimate the ADTT in one direction.
(3) Adjust the ADTT to a single lane with the appropriate value given in the AASHTO LRFD Specifications [AASHTO-LRFD 3.6.1.4.2].

5.5.1.2.4 Dynamic load allowance

[AASHTO-LRFD 3.6.2.1]

The static effects of the design truck or tandem, other than centrifugal and braking forces, shall be amplified by the dynamic load allowance (IM) given in the AASHTO LRFD Specifications [AASHTO-LRFD 3.6.2.1].

5.5.1.2.5 Earthquake

[AASHTO-LRFD 3.10.3.1, 3.10.4.2, 3.10.6, 3.10.9.2, 4.7.4.1, 4.7.4.4]

Based on the acceleration coefficient S_{D1}, all of Iowa with Site Class A through E shall be classified as Seismic Zone 1 [AASHTO-LRFD 3.10.3.1, 3.10.4.2, 3.10.6]. Thus for typical bridges no seismic loading (EQ) or analysis is required [AASHTO-LRFD 4.7.4.1]. However, for unusual projects such as bridge sites determined to be Site Class F and for Missouri River and Mississippi River bridges the designer shall determine the seismic zone and perform seismic analysis as required by the AASHTO LRFD Specifications.

Typical CWPG bridges with integral abutments, standard fixed pier connections, and/or standard steel reinforced elastomeric bearings do not require design for seismic connection forces. However, the designer should review bridges with deck expansion joints, bronze plate bearings, fixed shoe bearings, rocker bearings, and special bearings for the need to design for seismic connection forces [AASHTO-LRFD 3.10.9.2 and BDM 5.7.2.6]. At deck expansion joints there also will be a need to check bearing seat widths [AASHTO-LRFD 4.7.4.4].

5.5.1.2.6 Construction

[AASHTO-LRFD 6.10.3]

Under the constructibility provisions of the AASHTO LRFD Specifications [AASHTO-LRFD 6.10.3] the designer will need to check the girders for several limit states during construction. In addition to the DC1 loads listed in BDM 5.5.1.2.1 The Bureau requires the designer to use the following loads.

- Dead load of forms: 0.010 ksf
- Dead load of edge rail and walkway applied at the edge of the deck form: 0.075 klf
- Construction live load: 0.050 ksf [IDOT SS 2403.03, L, 4, d.]
- Live load of finishing machine located along the edge of the deck form to maximize the design condition: 9 kips
- Wind load for 100 mph wind at elevations not exceeding 30 feet above ground level: 0.050 ksf. At higher elevations the load shall be adjusted upward.

The designer shall consider the deck pouring sequence in the design of the girders for constructability (see BDM 5.2.4.1.2).

Typically during construction the exterior girder supports the deck overhang by means of an overhang bracket [BSB SS 4305A]. The bracket transfers to the exterior girder both vertical and lateral loads that are dependent on the bracket shape. The designer shall consider these construction loads to the exterior girder.

For most bridge projects it is assumed that construction can take place without cranes, construction vehicles, construction equipment, and concentrated quantities of construction materials on the bridge in addition to the loads listed above. If, however, the contractor does need to place additional loads on the bridge larger than those permitted by the Standard Specifications [IDOT SS 1105.12, D], the contractor will be required to submit structural analysis by an Iowa-licensed engineer for approval. Thus the bridge designer may be required to review construction loading after letting of the bridge contract.

During deck placement operations there is a tendency for exterior beams to laterally deflect and rotate which can lead to thin decks and an upward shift in bar mats which can decrease concrete cover. The tendency to laterally deflect and rotate is greater for shallow beams with large deck overhangs. In order to minimize these adverse effects CADD Note E204 in BDM 13.3.1 shall be included in the General Notes for new steel beam bridges and projects involving deck replacements. The note requires the contractor to consider incorporating temporary bracing as part of his means and methods in order to minimize these effects.

5.5.1.3 Load application to superstructure

5.5.1.3.1 Load modifier

[AASHTO-LRFD 1.3.2, 3.4.1]

Load factors shall be adjusted by the load modifier, which accounts for ductility, redundancy, and operational importance [AASHTO-LRFD 1.3.2, 3.4.1]. For typical CWPG bridges with at least three parallel girders the load modifier shall be taken as 1.0.

5.5.1.3.2 Limit states

[AASHTO-LRFD 2.5.2.6.2, 2.5.3, 3.4.1, 3.4.2]

For the typical CWPG bridge superstructure, the designer shall consider the following limit states for the completed bridge [AASHTO-LRFD 3.4.1].

- Strength I, superstructure with vehicles but without wind
- Extreme Event II, collision by vehicle (railing)
- Service I, live load deflection
- Service II, control of permanent deformations and slip control in slip critical connections for live load
- Fatigue

Usually Strength III (superstructure without vehicles but with design 3-second gust wind speed at 115 mph), Strength IV (superstructure with very high dead load to live load ratios), and Strength V (superstructure with vehicles and with design 3-second gust wind speed at 80 mph) will not control for the typical completed bridge, and the designer may use experience with typical CWPG bridges to avoid detailed checking of these three limit states. For long span and other non-typical bridges the designer shall fully consider all appropriate limit states.

The designer also shall consider the following limit states during construction.

- Strength I, structure with construction dead load and live load
- Strength III, structure with construction dead load and wind
- Strength IV, structure with construction dead load
- Strength V, structure with construction dead and live load and wind

The construction limit states should be considered with respect to deck pour sequence, uplift at bearings, deck overhang brackets, and other applicable factors [AASHTO LRFD 2.5.3].

Load combinations and load factors for these limit states are given in the AASHTO LRFD Specifications [AASHTO-LRFD 3.4.1, 3.4.2].

5.5.1.4 Plate girders

5.5.1.4.1 Analysis and design

The load and resistance factor design method shall be used for all superstructure members.

Haunched girders may be considered for aesthetic reasons for any span length but, for economy, haunched girder configurations should not be considered for spans less than 400 feet.

In most cases the superstructure will require only standard cross frames, but in some cases cross frames will need to be designed [BDM 5.5.1.4.1.16].

5.5.1.4.1.1 Analysis assumptions

Analysis for axial forces, shears, moments, and deflections shall be based on elastic behavior. Except at pier expansion joints, CWPG bridges shall be considered continuous over pier supports.

Changes in girder cross section shall be taken into account for continuous girder analysis. See the section properties article for cross sections to be used for analysis and strength computations [BDM 5.5.1.4.1.4].

5.5.1.4.1.2 Materials

All structural steel shall be one of the following grades specified in ASTM A709/A709M:

- Grade 36,
- Grade 50,
- Grade 50W,
- Grade HPS-50W,
- Grade HPS-70W, and
- Grade HPS 100W.

Generally, Grade 36 and Grade 50 are used for galvanized or painted steel; Grade 50W, Grade HPS-50W, and Grade HPS-70W are used for weathering steel; and higher grades are not used. The designer shall check availability of Grade 50W (345W) plate in thicknesses greater than 3 inches, Grade HPS-50W plate in thicknesses greater than 2 inches, and Grade HPS-70W in thicknesses greater than 1.5 inches.

Also note that Charpy V-notch (CVN) requirements apply to all members listed in the Iowa DOT standard specifications [IDOT SS 4152.02] plus the stiffeners connecting the floor beam diaphragms to the girders at all expansion joint locations. The CVN impact energy requirements in the Iowa DOT Standard Specifications correspond with nonfracture-critical requirements for Temperature Zone 2 in the AASHTO-LRFD Specifications [AASHTO-LRFD 6.6.2].

Fill plates 3/16 inch or less in thickness shall be A606 Type 4 steel, thickness specified by gage, without CVN requirements.

The bid item "Structural Steel" shall be used for all grades. Where more than one grade of steel is specified for a bridge design, a note stating the components to be made from each grade shall be included on the plans.

All CWPG bridges shall be designed with unpainted weathering steel unless site conditions are unfavorable as described in FHWA Technical Advisory T 5140.22 "Uncoated Weathering Steel in Structures" [BDM 5.5.1.1.5]. Unfavorable site conditions that may apply in Iowa are the following:

- Industrial areas where concentrated chemical fumes may drift directly onto the bridge,
- Grade separations in “tunnel-like” conditions, and
- Low level water crossings.

Particular consideration shall be given to grade separations with “tunnel-like” conditions when all of the following are present:

- Vertical clearance is 20 feet or less, because these bridges are more susceptible to “tunnel-like” conditions
- Bridges over interstates in urban corridors, since deicer treatment in these areas is typically more concentrated
- ADTT = 10% or more under the bridge, since trucks generate more misting with deicers than cars do
- Posted speed limit is 55 mph or greater, since higher speeds generate more misting with deicers

When bridges meet these criteria, consideration shall be given to using painted weathering steel for the whole bridge or only the specific regions that are the most vulnerable (e.g. over the roadway between bolted field splices). Painted weathering steel is preferred since uncoated Grade 50 and 50W steel have minimal cost difference.

Review each bridge that may have unfavorable site conditions with the supervising Unit Leader before beginning design.

Routine maintenance consisting of pressure washing to remove surface chlorides and accumulated dirt and debris from the rough, porous surface of weathering steel is typically only performed on border bridges. Pressure washing bridges over highly travelled areas on an annual or semi-annual basis is not considered practical due to traffic control requirements.

In suitable environments, uncoated weathering steel develops a thin oxidation layer, also called a surface patina, that is small grained (dense) and tightly adherent to the base metal. Once this oxidation layer builds to a sufficient thickness and density the exposure of the base metal to moisture and oxygen is blocked and further corrosion is greatly reduced. In 2011, an investigation into the performance of weathering steel bridges in Iowa was initiated (WJE, 2013). One result of this investigation is the decision to require a minimum 1/16-inch sacrificial thickness be added to the minimum design thickness for all web and flange plates, including bolted field splice plates for girders. This is a requirement for all bridge locations where unpainted weathering steel is utilized.

5.5.1.4.1.3 Design resistance

[AASHTO-LRFD 6.10, Section 6 Appendix A]

The designer shall determine design resistance (or strength) and stresses in accordance with the basic AASHTO LRFD Specifications [AASHTO-LRFD 6.10]. The Bureau does not permit use of Appendix A for determination of flexural resistance [AASHTO-LRFD Section 6 Appendix A].

Unpainted weathering steel girders, regardless of bridge location, shall have a minimum 1/16-inch sacrificial thickness added to the minimum design thickness for all web and flange plates, including bolted field splice plates for girders. Secondary members (e.g. stiffeners, cross frames, etc.) are not required to have an additional sacrificial thickness. Minimum design thickness is defined as the minimum material thickness needed to satisfy the design resistance requirements in the AASHTO LRFD Specifications. Minimum design thickness is not the final rounded-up incremental plate thickness selected by the designer to meet the steel mill's standard available plate thicknesses. The girder design must meet all AASHTO LRFD Specification requirements for the final plate sizes selected and those plate sizes with a thickness reduction of 1/16-inch. For example, if the designer selects a final girder flange plate thickness of 2 inches at a location then the design must be acceptable for the 2-inch thick plate as well as for a plate thickness that is 1/16-inch thinner which, in this example, would be 1-15/16 (1.9375) inches. Designers should not simply design to a standard available plate thickness and then increase the plate thickness to the next largest available standard plate thickness in order to satisfy the sacrificial thickness requirement. For thicker flange plates [e.g. greater than 1-1/4 (1.25) inches thick] it is desirable to try various plate width and thickness combinations since the available thicknesses are incremented by a 1/4-inch.

5.5.1.4.1.4 Section properties

[AASHTO-LRFD 4.6.2.6.1, 6.10.1.5]

The structural cross section of a straight, continuous welded plate girder varies with changes in steel cross section and with changes in the composite section from positive to negative moment regions. The Bureau considers full composite action between girder and deck in positive moment regions and conservatively neglects any composite action between girder and reinforcing or deck in negative moment regions, except as needed for design of shear connectors. The cross sections required for analysis and design are given in Table 5.5.1.4.1.4 and apply for the following:

- Continuous member analysis to determine girder moments, shears, and deflections;
- Computation of girder resistance for strength limit states;
- Computation of girder stresses for service limit states;
- Design of shear connectors; and
- Determination of loads to abutments and piers.

Table 5.5.1.4.1.4. Structural cross sections for analysis and design of straight, continuous welded plate girders

Load or Design Condition	Structural Section for Positive Moment Regions	Structural Section for Negative Moment Regions
DC1	Steel section	Steel section
DC2(1) and DW(1)	Composite section(3) with concrete deck transformed by 3n	Steel section(4)
Live or Live Plus Dynamic Load Allowance(2), Fatigue of Steel Girder	Composite section(3) with concrete deck transformed by n	Steel section(4)
Shear Connectors	Composite section with concrete deck transformed by n	Composite section with longitudinal deck reinforcement(5)

Table notes:

(1) See the dead load article for distribution of DC2 and DW [BDM 5.5.1.2.1].
(2) See the deflection and camber article for application of live load plus dynamic load allowance for deflection computations [BDM 5.5.1.4.1.12].
(3) For composite positive moment sections it is desirable to keep the neutral axis below the top flange of the steel girder. If the neutral axis is in the concrete deck, the deck will not be fully utilized in the cross section.
(4) Shear connectors are added to girders in negative moment regions because it usually is not practical to provide the number of shear connectors required to anchor the section at the girder splice point, but the concrete deck in negative moment regions is not considered part of the structural cross section. This Bureau policy of neglecting the deck in negative moment regions is intended as a substitute for the AASHTO LRFD stiffness policy [AASHTO-LRFD 6.10.1.5].
(5) The designer need not rerun software to determine shear ranges with longitudinal deck reinforcement in the negative moment regions; however the designer shall include the deck reinforcement in fatigue design of the shear connectors.

If software used for girder design is not fully compatible with the cross sections in Table 5.5.1.4.1.4, it may be necessary to run the software more than once, with different conditions for each run. If there are any conflicts with the cross sections the designer shall consult with the supervising Unit Leader.

For determining composite section properties the 8.50 deck thickness shall be reduced by 0.75 inch to account for the built-in wearing surface. The effective deck width shall be determined in accordance with AASHTO LRFD Specifications for effective flange width [AASHTO-LRFD 4.6.2.6.1] and considering the reduced deck thickness.

5.5.1.4.1.5 Moment

[AASHTO-LRFD 4.6.4, 6.10.6.2.3, Section 6 Appendix B]

In CWPG bridges the Bureau does not permit redistribution of negative moments as discussed in the AASHTO LRFD Specifications [AASHTO-LRFD 4.6.4, 6.10.6.2.3, Section 6 Appendix B].

5.5.1.4.1.6 Flanges

[AASHTO-LRFD 6.10.2.2, 6.10.3, C6.10.3.4]

The designer should attempt to use flange plates not exceeding a thickness of 2.5 inches because fabricators may have difficulty obtaining thicker plates. Flange width should be selected to the nearest whole inch. Flange plate thickness should be selected in 1/8-inch increments up to 2.5 inches and 1/4-

inch increments over 2.5 inches. Minimum top flange size is 12 inches by ¾ inch, and the flange size shall meet all of the size and proportion rules for flexural members [AASHTO-LRFD 6.10.2.2] and for constructability [AASHTO-LRFD 6.10.3]. Flanges for bridges with weathering steel shall meet the requirements of BDM 5.5.1.4.1.3.

Fabricators can reduce costs if welded flange plate transitions do not change both thickness and width at the same location. It is cheaper for some fabricators to order wide plates, make a single butt splice weld, and flame cut flanges to the desired width from the large welded plate. If the fabricator cannot prepare large flange plates, each flange must be custom cut and welded individually. Therefore, the designer should attempt to use constant width flanges in regions where flange transitions are commonly used, such as in negative moment regions.

In order to save material, present Bureau practice is to consider changing the flange thickness in the negative moment regions of continuous welded plate girders. However, a weight savings of about 1200 pounds per flange splice should be realized in order to justify the shop welded butt joint. If the weight of steel saved is sufficient, the designer should reduce flange thickness where negative moment is lower but maintain flange width; otherwise the designer should extend the thick flange plate throughout the negative moment region.

At welded flange splices the Bureau requires that the thinner flange plate have at least 50% of the cross sectional area of the thicker plate. This practice reduces stress concentration at the transition from the larger to smaller flange.

For aesthetic reasons, at bottom flange field splices between positive and negative moment regions the designer should preferably maintain approximately the same flange width. If the difference between top or bottom flange widths on either side of a field splice exceeds 2 inches then the wider flange should be clipped at a 1:1 transition.

If it is necessary to reduce a flange in both width and thickness to limit the maximum thickness to 2.5 inches or less, the designer should locate the welded butt splice at least 3 inches from the end of the width transition. This eases fitting of the run-off tabs needed to make the butt weld.

For girder stability during shipping and erection the Bureau prefers that the ratio of shipping piece length to compression flange width not exceed 85 [AASHTO-LRFD C6.10.3.4].

5.5.1.4.1.7 Lateral bracing

[AASHTO-LRFD 6.7.4, 6.7.5]

The designer shall investigate the need for lateral bracing for all CWPG superstructures [AASHTO-LRFD 6.7.4, 6.7.5].

If girders have section changes in high stress regions, such as flange butt splices in negative moment regions, the designer shall investigate lateral bracing requirements at the points of section change.

If a lateral bracing check is inadequate, the designer shall consider the following corrective measures in the order listed:

(1) At locations of section change, extend the larger flange sizes beyond the overstressed regions.
(2) Increase the flange width in the overstressed regions.
(3) Reduce the diaphragm or cross frame spacing in the overstressed regions.
(4) Add lateral bracing in the exterior bays of the overstressed regions.

5.5.1.4.1.8 Shear connectors

[AASHTO-LRFD 6.10.10]

The designer shall use 7/8 inch diameter shear studs, unless the supervising Unit Leader approves an exception.

Shear stud height will vary depending on girder top flange thickness. For typical girders the designer should use a 3.5-inch height in negative moment regions and a 5.0-inch height in positive moment regions. Stud heights shall be limited to 3.5 inch, 4.0 inches, 5.0 inches, and 6.0 inches.

For haunch design, the haunch thickness shall be 0-inch minimum and 2-inch maximum.

For allowable field haunch, the haunch will be limited by the following [BDM 5.3.3.1] which is based, in part, on an 8.50-inch thick deck.

- Up to 0.5-inch embedment of the top flange into the deck measured at the edge of the flange,
- 2.75-inch clearance between the top of deck and shear stud,
- 2.0-inch minimum penetration of shear stud into the deck, and
- 3.5-inch maximum haunch measured at the centerline of the girder.

Shear connectors shall be designed according to the AASHTO LRFD Specifications [AASHTO-LRFD 6.10.10]. Although the longitudinal deck reinforcing is not considered part of the section properties for resisting negative moments, the reinforcing shall be considered part of the section properties when designing the shear connectors. The provisions for additional connectors at points of permanent load contraflexure shall not apply [AASHTO-LRFD 6.10.10.3].

Shear connectors shall be designed for fatigue and checked for strength limit states [AASHTO-LRFD 6.10.10.1.2].

Designers shall note that fatigue design of the shear connectors themselves does not constitute satisfying fatigue design of the base metal at a shear connector as stated in the last paragraph of AASHTO-LRFD 6.10.10.2 which says “The effect of the shear connector on the fatigue resistance of the flange shall be investigated using the provisions of Article 6.6.1.2” [BDM 5.5.1.4.1.15].

Shear connector spacing shall not exceed 24-inches center-to-center longitudinally except in the following circumstances.

- Shear connectors shall be omitted in the region of the girder equal to the depth of the girder each side of the centerline of pier.
- Shear connectors may be spaced to clear top flange splice plates up to 42 inches in length at points of contraflexure.

Shear connectors shall be attached to top flange splice plates greater than 42 inches in length. Shear connectors attached to splice plates shall be spaced at no more than 24 inches and will require a minimum of 2 shear connectors per row. Designers shall provide a minimum of 2.5 inches between centerline of shear connector and centerline of bolt. Designers may need to reduce the height of shear connectors attached to the top flange splice plate in order to meet clearance requirements in the deck. When splices are used at points other than points of contraflexure the designer shall consult with the Chief Structural Engineer. Shear connectors shall not be placed closer than six stud diameters center-to-center longitudinally [AASHTO-LRFD 6.10.10.1.2]. Transverse spacing of shear connectors shall not be less than four stud diameters center-to-center [AASHTO-LRFD 6.10.10.1.3].

If a girder is discontinued and the discontinued end supported on a cross beam, shear studs shall be installed on the top flange of the cross beam.

5.5.1.4.1.9 Shear

Reserved

5.5.1.4.1.10 Web

[AASHTO-LRFD 6.10.2.1, 6.10.3]

Generally, web plate thickness should be 7/16-inch or thicker and should be selected in 1/16-inch increments. Web depth should be selected to the nearest whole inch. Web size shall meet all of the size and proportion rules for flexural members [AASHTO-LRFD 6.10.2.1] and for constructibility [AASHTO-LRFD 6.10.3]. Webs for bridges with weathering steel shall meet the requirements of BDM 5.5.1.4.1.3.

In most cases, for economy the designer initially should determine the web thickness based on an unstiffened web plate and reduce the thickness by 1/16 inch for final design. The final design then will be based on a partially stiffened web that minimizes the need for intermediate stiffeners. However, the designer should consider an unstiffened or fully stiffened web if either of those choices has an economic advantage over a partially stiffened web.

5.5.1.4.1.11 Stiffeners

[AASHTO-LRFD 6.10.11.1, 6.13.3.4]

Longitudinal stiffeners are required if $D/t_w > 150$ where D and t_w are web depth and thickness, respectively [AASHTO-LRFD 6.10.2.1.1]. For economy the Bureau prefers that designers avoid using longitudinal stiffeners for spans less than 300 feet and girder web depths less than 10 feet. Additionally, longitudinal stiffeners are often only economical for $D/t_w > 200$. Designers should consult with the Chief Structural Engineer before electing to use longitudinal stiffeners. In general the designer should minimize the number of stiffeners. The Bureau prefers multiples of 1/2-inch dimensions for widths of stiffener plates.

Present Bureau practices for intermediate stiffeners, intermediate diaphragm stiffeners, and bearing stiffeners at abutments and piers are shown on standard sheets [BSB SS 1021] and in Figure 5.5.1.4.1.11. Practices for bearing stiffeners are summarized in Table 5.5.1.4.1.11.

Intermediate stiffeners (without diaphragm connections) should be placed on only one side of the web. When the plans indicate a tension and compression flange at the stiffener location, then the stiffener shall be welded to the girder compression flange and shall be tightly fitted to the girder tension flange. When the plans indicate tension flanges at each end of the stiffener at the stiffener location, then the stiffener shall be welded to the girder tension flange with the lower fatigue stress range and shall be tightly fitted to the other girder tension flange. In all cases the stiffener shall be welded to the web.

Intermediate stiffeners and intermediate diaphragm stiffeners should be aligned perpendicular to the web.

Intermediate diaphragm stiffeners shall be rigidly attached to both top and bottom flanges as required in the AASHTO LRFD Specifications [AASHTO-LRFD 6.10.11.1]. This attachment is required because differential movement of adjacent girders at the diaphragm location can cause distortion fatigue due to out-of-plane bending in the girder web if the stiffeners are not rigidly attached.

A standard sheet [BSB SS 1021] shows two rigid attachments of diaphragm stiffeners to girder flanges, a bolted attachment and a welded attachment. Because of its high cost, the bolted attachment is intended only for bridges for which the fatigue limit state cannot be accommodated by the welded attachment [BDM 5.5.1.4.1.15] or other means.

To avoid use of the bolted tab connection the designer should first check the fatigue limit state at the diaphragm connections to determine if a welded detail is acceptable. If stresses are too high to permit the welded detail, the designer should consider increasing the flange thickness to lower the stress range for fatigue or moving the diaphragm. The designer shall compare costs between the option of bolted tabs with initial flange thickness and the option of welded attachments with thicker flange. If the cost of the welded attachments with thicker flange has the higher cost, the designer shall use the bolted tab detail and specify the locations for the bolted tabs on the plans. The designer should discuss the options with the supervising Unit Leader.

Typically bearing stiffeners should be aligned normal to the girder. If shop drawings show stiffeners aligned to be vertical after erection, the case shall be referred to the Chief Structural Engineer for approval.

Bearing stiffeners are attached to the girder web and bottom flange with a fillet weld. Attachment to the top flange is dependent on the diaphragm arrangement at the support. For all abutment bearing stiffeners and for all pier bearing stiffeners where the diaphragms are skewed parallel with the centers of bearings, a tight fit to the top flange is sufficient. There will be no differential movement of the diaphragm ends in these situations, so no out-of-plane bending of the girder web will result.

For skewed bridges with diaphragms perpendicular to the girder webs, the pier bearing stiffeners shall be attached to the top flange to eliminate out of plane bending of the girder web. See Table 5.5.1.4.1.11 for a summary of bearing stiffener requirements.

Table 5.5.1.4.1.11. Bearing stiffener requirements

Substructure component	Skew, degrees	Diaphragm direction	Stiffener direction / detail
Abutment	≤ 30(1)	Parallel with centerline of bearings	Parallel with centerline of bearings / tight fit at girder top flange, Figure 5.5.1.4.1.11
Abutment	> 30	Perpendicular to girder web	Perpendicular to girder web / tight fit at girder top flange, additional bent plate for diaphragm attachment, Figure 5.5.1.4.1.11
Pier	≤ 20	Parallel with centerline of bearings	Parallel with centerline of bearings / tight fit at girder top flange, [BSB SS 1021]
Pier	> 20	Perpendicular to girder web	Perpendicular to girder web / bolted attachment to top flange, [BSB SS 1021]

Table note:

(1) If stiffeners are skewed greater than 30 degrees, the stiffeners usually cannot be placed with double fillet welds.

For bridge skews less than or equal to 30 degrees, the abutment diaphragms shall be connected to bearing stiffeners aligned with the centerline of bearings. In the upper part of Figure 5.5.1.4.1.11 two details for fillet welding a skewed stiffener to the girder web are shown. Detail A may be used if the skew angle and stiffener thickness are such that the joint opening between stiffener edge and web does not exceed 1/8 inch. If the opening is greater than 1/8 inch, Detail B shall be used. For Detail B, indicate on the plans that the stiffener shall be beveled to fit against the web, and indicate a double fillet weld.

If skewed bearing stiffeners are used, the sole plate size shall be made sufficiently large to cover the stiffener end.

For bridge skews greater than 30 degrees the bearing stiffeners at abutments shall be placed perpendicular to the girder web. The abutment diaphragms shall be connected to ½ inch bent plates as shown in the lower part of Figure 5.5.1.4.1.11. The designer should provide about 2 inches between the bent plates and the bearing stiffeners so that there is room to make the fillet welds. The designer also should provide sufficient cope of the diaphragm to allow installation.

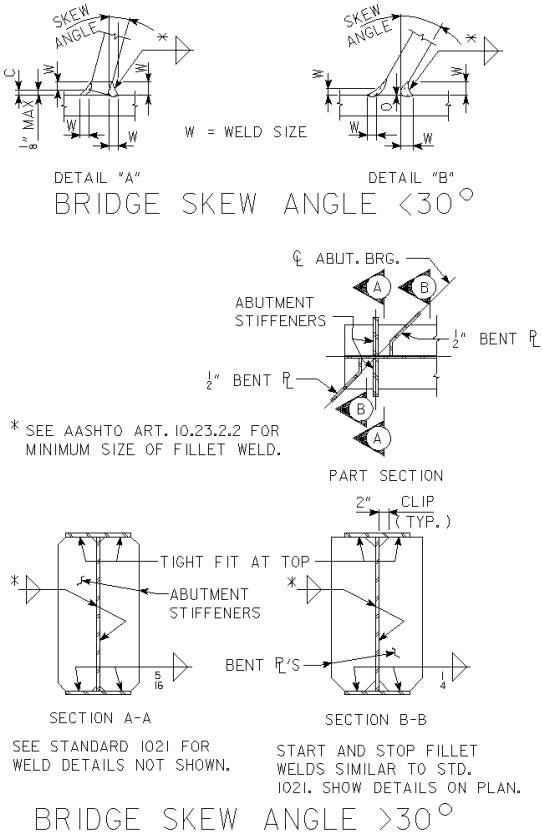

Figure note:

- For a bridge skew angle of 30 degrees, use the details for bridge skew angle less than 30 degrees.

Figure 5.5.1.4.1.11. Bearing stiffener details at abutment

The standard sheet [BSB SS 1021] and Figure 5.5.1.4.1.11 do not give fillet weld sizes, and those sizes shall be determined based on the AASHTO minimum sizes [AASHTO-LRFD 6.13.3.4], preheat considerations, and stress computations. For weld preheat information, consult the edition of the American Welding Society's *Bridge Welding Code, D1.5* referenced in the standard specifications [IDOT SS 2408.03, B].

5.5.1.4.1.12 Deflection and camber

[AASHTO-LRFD 2.5.2.6.2, 2.5.2.6.3, 3.6.1.1.2]

Unless the bridge site presents vertical clearance or profile grade issues the goal is to set composite girder depths at about 1/25 of the span. If it is necessary to use shallower girders the Bureau prefers that the designer consider the AASHTO LRFD span-to-depth ratios [AASHTO-LRFD 2.5.2.6.3] to be minimum. For composite girders with a depth less than 1/25 of the span, deflection may control design of the cross section.

The Bureau requires the designer to check deflection according to the AASHTO LRFD criteria [AASHTO-LRFD 2.5.2.6.2]. Preferably the deflection for live load plus dynamic load allowance should not exceed L/1000, but in no case shall the deflection exceed L/800. For bridges that carry pedestrian traffic the deflection for live plus dynamic load allowance shall not exceed L/1000. If live plus dynamic load allowance deflection controls the design, the designer shall consult with the supervising Unit Leader.

When computing deflections the designer shall use the number of 12-foot wide design traffic lanes that fit on the roadway with the applicable multiple presence factor for three or more lanes [AASHTO-LRFD 3.6.1.1.2]. Live load plus dynamic load allowance shall be distributed equally to all girders.

The designer shall determine camber to account for noncomposite dead load, DC1, deflections. For bridges that have extra composite dead load, DC2 or DW, such as sidewalks, median structures, planters, or large utility pipes, the designer shall determine camber to account for all dead load: DC1, DC2, and DW. The fabricator is required to provide the camber by cutting the web plate, with an allowance to compensate for the effect of welding operations to be performed on the girder during fabrication [IDOT SS 2408.02, K]. The allowance is not to be addressed on the shop drawings. Camber in plate girders shall not be induced or corrected by local heating without prior approval.

5.5.1.4.1.13 Welded connections

The designer should avoid field welded connections. All field welding designations shall be approved by the supervising Unit Leader.

Field welding of previously galvanized surfaces is not encouraged. If field welding is necessary and approved by the supervising Unit Leader, the repair of the galvanizing shall be specified to follow “ASTM A780, Standard Practice for Repair of Damaged and Uncoated Areas of Hot-Dip Galvanized Coatings.” The surface to be repaired shall be cleaned as described in Annex A1 and repaired with zinc-based solder as specified in Article 4.2.1 or cleaned as described in Annex A2 and repaired with paint containing zinc dust as specified in Article 4.2.2 of ASTM A780. The designer shall include a note that requires the galvanizing repair to be incidental to the field welding.

All welding and fabrication of CWPG bridges shall conform to *Bridge Welding Code, AWS D1.5M/D1.5*, except as modified in the standard specifications [IDOT SS 2408.03, B].

In accordance with the standard specifications, one hundred percent of each flange butt weld subject to tension or reversal of stress shall be radiographed [IDOT SS 2408.03, B]. Fifty percent of each flange butt weld subject only to compression is to be radiographed. The designer shall check each butt splice primarily subject to compression for possible reversal of stress. The designer shall indicate on the plans which flange butt welded joints require full width radiographing and which joints require radiographing only fifty percent of the width. Figure 5.5.1.4.1.13-1 is the standard detail and inspection note for butt welding girder flanges.

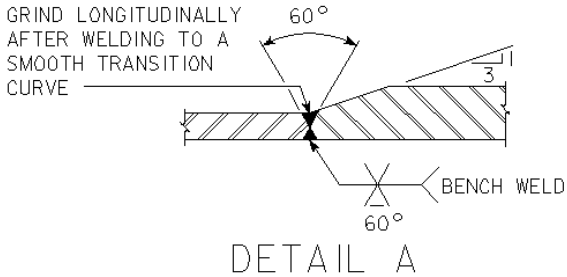

Figure notes:

- Bench weld indicates a machine-made shop weld.
- Refer to Article 2408.03, B, 6.7, of the Standard Specifications for additional welding information.

Figure 5.5.1.4.1.13-1. Flange butt weld splice detail and note

The standard specifications [IDOT SS 2408.03, B] require all groove welds in main members to be tested by nondestructive testing methods.

In cases where a longitudinal stiffener is needed, a flat horizontal surface should be provided for a groove weld attaching the longitudinal stiffener to the girder web to properly direct the beam of the ultrasonic testing equipment. Therefore, the end of the stiffener in the standard detail, Figure 5.5.1.4.1.13-2, should not be coped until after the ultrasonic testing is completed. In the standard detail, the coped radius at the end of the stiffener upgrades the detail from fatigue category E to C, thereby enabling the detail to more readily satisfy fatigue stress ranges.

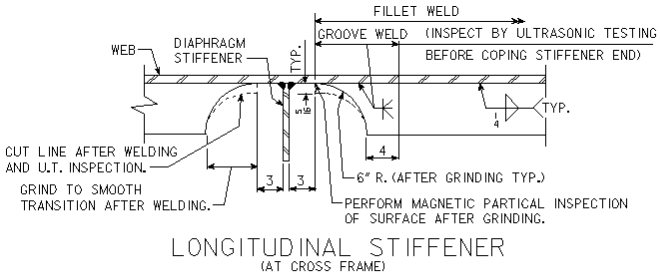

Figure 5.5.1.4.1.13-2. Longitudinal stiffener detail

5.5.1.4.1.14 Bolted connections

[AASHTO-LRFD 6.13.2.7, 6.13.2.8]

The Bureau prefers to use a single bolt size, 7/8 inch diameter.

Bolts for use on painted or unpainted weathering steel projects shall be A325 Type III with A563 Grade DH3 nuts and F436 Type III washers [BDM 13.9.2 E930].

Tension control bolts [BDM 5.5.1.1.3] may be used for connections completed in the shop, but tension control bolts shall not be used for field connections.

Because it is difficult to control bolt length in the field, for shear resistance the designer shall assume that threads are included in shear planes.

The reduction in shear resistance for connections greater than 38 inches in length applies for bolts in tension (flange) splices but not for bolts in shear (web) splices [AASHTO-LRFD 6.13.2.7].

If possible, the designer should avoid the use of 1/16 inch shims or filler plates in bolted connections.

For high strength slip-critical bolted connections, girder and connector surfaces may be either unpainted weathering steel or painted steel. Weathering steel is prepared with blast cleaning in accordance with the standard specifications [IDOT SS 2408.02, Q], and painted steel will have a single coat of solvent borne zinc silicate paint [IDOT SS 2408.02, Q]. The weathering steel surface qualifies by description as a Class B contact surface, and the painted surface has been qualified by test as a Class B surface. High strength, slip-critical bolted connections therefore shall be designed for Class B nominal slip resistance [AASHTO-LRFD 6.13.2.8].

Iowa requires all high strength bolted joints to be slip-critical connections. This includes joints that the AASHTO-LRFD Specifications would otherwise permit to be bearing-type connections: joints subject only to axial compression or joints on bracing members [AASHTO-LRFD 6.13.2.1.2]. Iowa does not specifically designate by note in the plan set that all high strength bolted joints be slip-critical connections. However, the Iowa DOT Standard Specifications require all high strength bolts be installed by the turn-of-the-nut method up to the tension required in a slip-critical connection [IDOT SS 2408.03, S, 5]. Additionally, as per the previous paragraph, all surfaces are prepared to or meet Class B contact surface requirements. Designers shall designate on the plans which connections are bearing-type connections only when a bearing-type connection is specifically desired.

5.5.1.4.1.15 Fatigue

[AASHTO-LRFD 6.6.1.2, 6.6.1.3]

Bureau policy generally is to design for fatigue based on ADTT. However, the cost of girders designed for finite fatigue life shall be compared to the cost of girders designed for infinite fatigue life. If the difference in cost is nominal, then base the final design on infinite fatigue life. For bridges carrying mainline Interstate traffic, the designer shall consult with the Chief Structural Engineer regarding the need to design for infinite fatigue life.

The designer shall follow the load-induced fatigue design rules in the AASHTO LRFD Specifications [AASHTO-LRFD 6.6.1.2] with the applicable resisting sections in Table 5.5.1.4.1.4. If design software does not permit use of the resisting sections required by the Bureau, the designer should use the unfactored moments in the program output with the applicable resisting section to determine the stress ranges.

Designers should check all applicable components and details for load-induced fatigue. However, some commonly used components and details for new steel beam designs which provide less fatigue resistance and are therefore more likely to control portions of the design include the following:

- Detail Category C' - Base metal at the toe of transverse stiffener-to-flange fillet welds. Also includes similar welds for bearing stiffeners and connection plates.
- Detail Category C - Base metal at stud-type shear connectors attached by fillet or automatic stud welding.

The designer also shall follow the distortion-induced fatigue rules in the AASHTO LRFD Specifications [AASHTO-LRFD 6.6.1.3].

5.5.1.4.1.16 Diaphragms and cross frames

[AASHTO-LRFD 6.7.4.1, 6.7.4.2, 6.9.4.1, 6.12.2.2]

Although the AASHTO LRFD Specifications do not limit diaphragm spacing to a specific maximum [AASHTO-LRFD 6.7.4.1], the Bureau prefers that the permanent diaphragm or cross frame spacing not exceed the previous AASHTO Standard Specifications maximum of 25 feet. Regardless of spacing the designer will need to evaluate the need for diaphragms at all stages of construction and the final condition.

Permanent diaphragms and cross frames shall be placed perpendicular to girders except at abutments and piers of bridges with small to moderate skews. Policies for direction of abutment and pier diaphragms and cross frames for skewed bridges are given in the stiffener article [BDM Table 5.5.1.4.1.11]. A standard sheet illustrates the perpendicular pier diaphragm or cross bracing plan layout to be used at piers skewed more than 20 degrees [BSB SS 1021].

For superstructures with girder webs greater than 36 inches deep and with an angle between brace members of 30 degrees or more, the designer shall use the cross brace style of diaphragm shown in Figure 5.5.1.4.1.16-1 and on standard cross sections [BSB SS 4305-4310] and the alternate style [BSB SS 4305A] at pier and intermediate locations. Each plan set should include sheets for both the usual and alternate styles.

The designer need not check cross frame member sizes for typical bridges with all of the following characteristics:

- Cross frame spacing not exceeding 25 feet,
- Girder spacing not exceeding 10.25 feet,
- Girder depths not exceeding 6 feet,
- Four or more girders in the cross section,
- Spans not exceeding 150 feet, and

- Pier cross frames laid out for skew as per Bureau practice [BSB SS 1021].

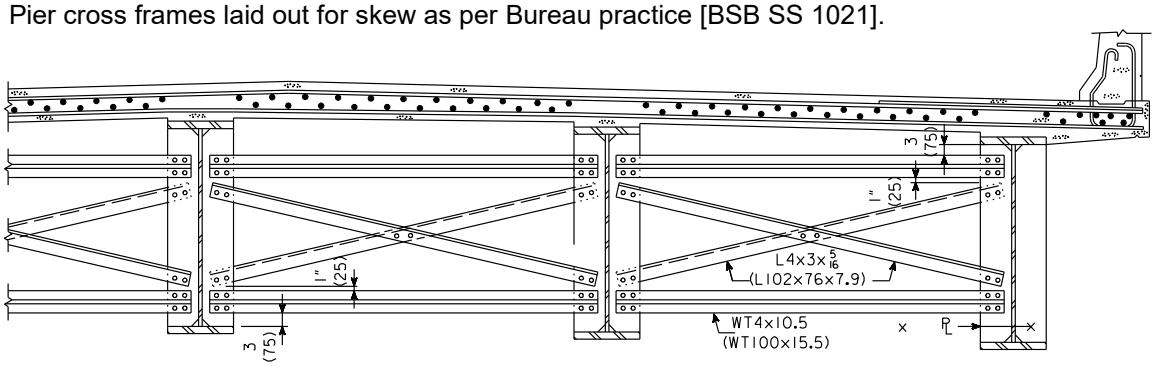

Figure 5.5.1.4.1.16-1. Typical cross brace diaphragm

In some cases when the angle between brace members is relatively large there may not be adequate clearance for two bolts placed at the center of the crossing as shown in Figure 5.5.1.4.1.16-1 or on Detail B on standard sheets [BSB SS 4305-4310]. If the bolts do not fit, the designer may extend the fill plate so that the bolts can be placed on each side of the crossing as shown in Figure 5.5.1.4.1.16-2.

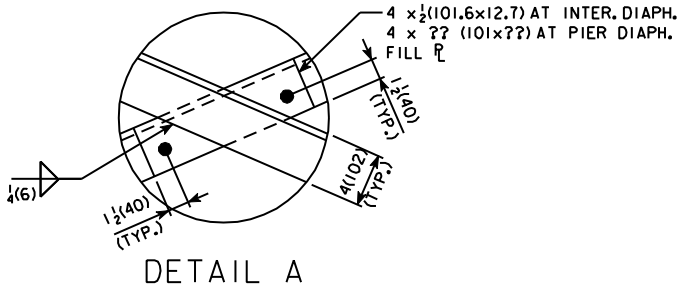

Figure 5.5.1.4.1.16-2. Alternate bolt detail at brace member crossing

For typical bridges meeting the characteristics given above except that girder webs are 36 inches deep or less, the designer may use the K-brace style of diaphragm fabricated from Grade 50 or 50W (345 or 345W) tees shown in Figure 5.5.1.4.1.16-3 or a channel or bent plate diaphragm at pier and intermediate locations. If the designer chooses to use a channel or bent plate diaphragm, the diaphragm shall be as deep as practical [AASHTO-LRFD 6.7.4.2]. The Bureau prefers that the diaphragm depth be at least half the depth of the girder.

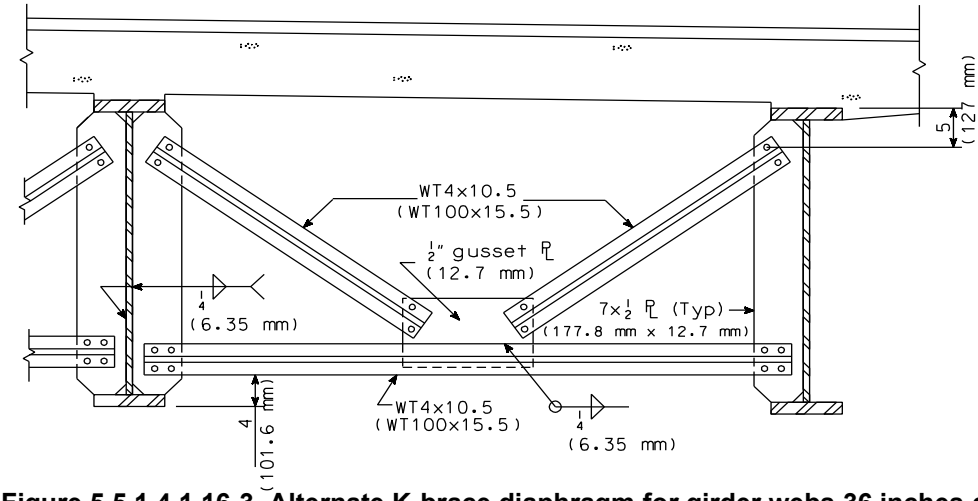

Figure 5.5.1.4.1.16-3. Alternate K-brace diaphragm for girder webs 36 inches deep or less

For bridges not meeting the typical characteristics listed above the designer shall design the cross- or K-frames for limit states during construction and after completion of the bridge [BDM 5.5.1.3.2, AASHTO-LRFD 6.7.4.1, 6.7.4.2, 6.9.4.1, 6.12.2.2]. For design under construction limit states for a typical bridge the designer may assume the entire girder-cross frame structure is in place.

Additionally, special cross- or K-frames shall be designed to meet the following:

- In an X-frame the connected crossing point shall not be considered a brace point if both diagonals are in compression. If one diagonal is in tension, a connected crossing point may be considered a brace for the compression member.
- Cross- or K-frame members shall meet the minimum slenderness for compression members, KL/r = 140. Minimum K for single angles shall be 1.0. Minimum K for structural tees may be 0.75. [AASHTO LRFD 4.6.2.5].
- Lengths of members bolted directly to stiffeners may be determined from centers of end connections.
- Stems of tees shall be a minimum of 0.25 inches thick [AASHTO LRFD 6.7.3].
- Flanges of tees and legs of angles shall be a minimum of 0.3125 inches thick [AASHTO LRFD 6.7.3].

In cases where girder depths vary, the designer shall consider constructability issues. In most cases the designer should use a single diaphragm or cross frame type based on the minimum girder depth, but there may be project considerations that suggest multiple types. Before making a final decision, the designer should consult *Guidelines to Design for Constructability and Fabrication, G 12.1* [BDM 5.5.1.1.5].

The designer should be aware that each weathering steel shape in cross frames and diaphragms amounts to a relatively small steel quantity, usually less than 5 tons per bridge. A minimum rolling mill quantity typically is at least 20 tons. Therefore, the Bureau prefers that the designer not use tees cut from S-shapes or other uncommon shapes because those shapes will have limited availability and high costs. Availability of uncommon shapes also fluctuates, and the availability may not be the same at the time of fabrication as at the time of design.

5.5.1.4.1.17 Horizontally curved superstructures

[AASHTO-LRFD 6.1, C6.1]

For horizontally curved CWPG superstructures the designer shall use the AASHTO LRFD Specifications which have incorporated the 2003 edition of the horizontally curved steel girder guide specifications. The specifications are limited to curved bridges with radii greater than 100 feet [AASHTO-LRFD 6.1]. To avoid construction problems, curved girder bridge spans should be limited to 350 feet [AASHTO-LRFD C6.1].

Because of bridge curvature, girder lengths will vary from girder line to girder line. The preferred method for flange plate sizing is to use the same plate thickness for all girders in a region and vary flange plate widths to meet strength requirements.

5.5.1.4.1.18 Additional considerations

[AASHTO-LRFD 6.10.1.7]

The AASHTO LRFD Specifications require minimum longitudinal reinforcement in the bridge deck in regions where either factored construction loads or the Service II load combination could cause sufficient tension to crack the deck [AASHTO-LRFD 6.10.1.7]. Bureau policy is to provide this minimum throughout the deck [BDM 5.2.4.1.1.8]. The reinforcement shall be one per cent or more of the cross sectional area of the concrete bridge deck and shall not exceed #6 in size. Although the Bureau provides the minimum reinforcement, the Bureau does not follow the AASHTO guideline that two-thirds be placed in the top layer. The designer may neglect the two-thirds rule and adjust the minimum reinforcement between top and bottom layers.

Nominal yielding of this negative moment reinforcement shall be prevented at the Service II load combination [AASHTO-LRFD C6.10.1.7].

Unfactored reactions for abutment and pier supports, and unfactored maximum moments for positive and negative moment regions for each different girder shall be organized in a table on the bridge plans. Within the tables the reactions and moments shall be listed for DC1, DC2, DW, and HL-93 live load plus dynamic load allowance (impact). Include live load distribution factors for reactions and moments as appropriate. An example table is provided in the commentary of this article.

Although some fabricators may be able to fabricate and ship girders lengths to 150 feet the Bureau prefers that the maximum length for any girder section between end and splice or between splices be 120 feet. This maximum length is intended to permit more fabricators to bid on CWPG bridge projects and to avoid fabrication and shipping difficulties.

5.5.1.4.2 Detailing

In order to promote proper welding and weld inspection for CWPG bridges, the designer shall provide on the “Girder Elevation” detail the location of tension and compression areas for both the top and bottom flanges of the girder under Strength Load Combination I. Flange areas subject to a net tensile stress under Strength Load Combination I shall be designated as tension areas.

Stiffeners connecting floor beam diaphragms to the girders at all expansion joint locations are part of the system that transfers load from the floor beam to the longitudinal girder, and therefore Charpy V-notch testing is required for the stiffeners. Because the Charpy requirements in the Iowa DOT standard specifications [IDOT SS 4152.02] do not include the stiffeners, the designer shall add a note to the plans requiring Charpy testing for the stiffeners.

Because of OSHA safety regulations all shear studs are to be installed in the field after bridge deck formwork is in place. The designer shall not specify shop welding of shear studs.

The following spacing requirements are generally considered to be good practice in order to facilitate non-destructive testing of welds and possibly minimize heat affected zones between welds and should be adhered to whenever possible. Shop welded flange splices shall be at least 6 inches from a stiffener, 6 inches from a web splice, and 4 inches from a shear connector. Web splices shall be at least 6 inches from a stiffener. Splices shall not interfere with other bridge components.

Flange deflectors shall be provided on the outside flanges of unpainted exterior weathering steel girders to divert runoff ahead of abutments and piers. The deflectors shall be as shown on a standard sheet [BSB SS 1021].

When preliminary design indicates that the design or lesser flood at a bridge site would extend from integral abutment to integral abutment above the bottom flanges of girders, during a flood the superstructure will be subjected to uplift from trapped air between girders. In that case the preliminary design (or type, size, and location, commonly called the TS&L) will have a recommendation for venting of the steel superstructure. Unless the supervising Unit Leader approves an alternate method of venting, the designer shall provide vent holes in beam webs. The holes should be 2 inches in diameter, have about 8 inches of clearance from the top flange, and be located at the third points of girder length. Locations of the holes may be shifted to give at least 6 inches of clearance to cross frames, stiffeners, and other obstructions.

Unpainted weathering steel is to be blast cleaned and water washed to promote uniform weathering as described in the standard specifications [IDOT SS 2408.02, Q].

The Bridges and Structures Bureau will require painting the fascia of exterior girders on the median side only where the median opening is 30’ or less (see figure 5.5.1.4.2 below). The purpose of this limited

painting is to protect the median girders from exposure to contaminated snow that is typically pushed over the railing.

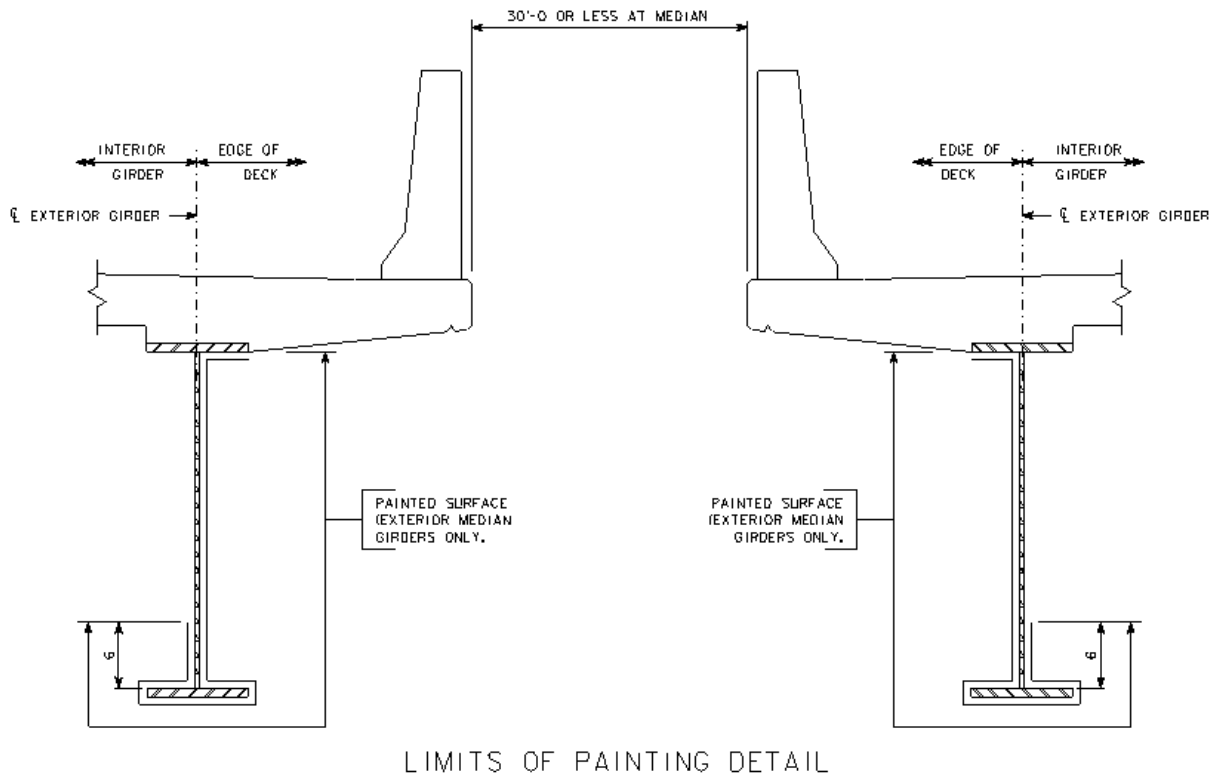

Figure 5.5.1.4.2. Painting limits for fascia of exterior girders when median is 30' or less

Structural steel weight shall be determined using the guidelines in the standard specifications [IDOT SS 2408.04, C]. Protruding parts of pintles and similar anchor studs are added, but holes for bolted connections are not deducted. Structural steel weight shall include no allowance for coatings such as paint or galvanizing.

Unless otherwise shown on the plans, the following areas of weathering steel are to be painted:

- All steel near expansion joints,
- All bearing assemblies except galvanized parts, and
- Girder ends embedded in concrete.

See the standard specifications for detailed requirements [IDOT SS 2408.02, Q].

All barrier rail to bridge deck/wing reinforcement for interstate and primary bridges shall be stainless steel. All other reinforcement in CWPG superstructures shall be epoxy coated, including the following:

- All deck reinforcing steel, longitudinal and transverse, top and bottom.
- All reinforcing in concrete diaphragms.
- All barrier rail and median barrier reinforcing steel, longitudinal and transverse, except as noted above.
- All light pole base reinforcing steel.

When computing weights of non-high-strength bolts the designer should use the 9th Edition of AISC's *Manual of Steel Construction* [BDM 5.5.1.1.5]. Later editions of the manual have incorrect bolt and nut descriptions.

5.5.1.4.3 Shop drawings

In order to fabricate steel for highway bridges, fabricators must be approved in advance [OM IM 557 and Appendices]. Ensuring that a fabricator is approved shall be checked by the Bureau engineer until a new process is developed to verify approval of the fabricator prior to shop (working) drawing submittal.

The review of shop drawings submitted by the contractor covers only requirements for strength and arrangement of component parts [IDOT SS 1105.03]. The Bureau reviews shop drawings to ensure that the structural adequacy of the design is maintained as detailed on the original design drawings. The Bureau review stamp is shown in Figure 5.5.1.4.3-1.

When reviewing shop drawings, the reviewer shall do the following:

- Every page of a shop drawing submittal shall be stamped every time it is submitted. The only exception is for calculation submittals which will typically only require a stamp on the cover sheet.
- Each stamped page will indicate one of the three status options as shown in Figure 5.5.1.4.3-1: “No Exceptions Taken”, “Make Corrections (No Resubmittal Necessary)”, “Revise and Resubmit”.

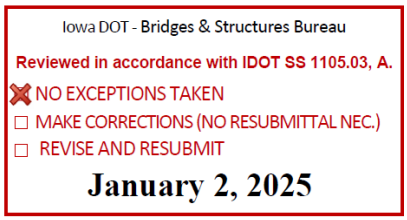

Figure 5.5.1.4.3-1. Shop drawing review stamp

The DOT may reject a submittal if the file naming convention does not reasonably conform to the file naming standards in the contract plan documents. The letter from the DOT to the AGC in BDM C1.17 specifies the conditions for rejection more fully. A designer shall not reject a submittal based on file naming convention without approval from the Supervising Unit Leader.

The extent of the shop drawing review will vary with each design. On curved and complex designs, the reviewer shall discuss in advance the extent of the shop drawing review with the supervising Unit Leader.

The Bureau prefers that straight and curved CWPG superstructures be detailed by the fabricator for a steel dead load fit (SDLF). A no-load fit (NLF) is recommended for horizontally curved bridges where $(L/R)_{max}$ is greater than or equal to 0.2 where R is the radius at the bridge centerline and L is the bearing to bearing arc span length at the bridge centerline.

A detailed check of the dimensions on the shop drawings usually is not required. However, depending upon the level of difficulty or complexity of the structure, a spot check of critical locations may be performed. The dimension check should be based on sound engineering judgment.

Changes from the contract plans or specifications, regardless of magnitude, shall not be allowed unless they have been documented previously as acceptable or have been approved by the supervising Unit Leader.

The following review guidelines for the typical wide flange or CWPG bridge establish uniform practice and avoid omissions.

The following items shall be included in the review:

(1) Verify that all material shown on the shop drawings conforms to the size, thickness, and material type shown on the contract plans.
(2) Check the flange and web plate cutoffs.
(3) Check the location of main beam and girder splice locations and details of connections not dimensioned on the contract plans.
(4) Verify alignment of bearing stiffeners normal to girders.
(5) Check number and approximate location of diaphragms.
(6) Check the number and size of bolts (diameter only–not length) in all connections.
(7) Check the numbers of shear studs.
(8) Check the size of all welds and welding details.
(9) Check the finish on bearing assemblies.
(10) Ensure that the amount of camber and the camber diagram configuration conform to the contract plans.

The following items do not need to be included in the review:

(1) The length of members or components
(2) The location and gauge of holes
(3) The camber diagram ordinates (girder lay-down dimensions)
(4) Web cutting diagrams
(5) Attachments to expansion plates
(6) Bills of materials
(7) Weld procedures (These are checked by the Construction and Materials Bureau. See Figure 5.5.1.4.3-2.)

The following weld detail typically is permitted when shown on shop drawings:

- Abutment anchor bar weld substitution: In cases where the abutment bearing is anchored to the backwall with 1-inch square bars, the standard detail [BSB SS 4541] shows each anchor bar cut through its anchor plate, with a ¼-inch fillet weld all around on the far side. The fabricator may substitute on the near side of the anchor plate an all-around 45-degree, 5/16-inch partial-penetration groove weld reinforced with a 5/16-inch fillet weld. The partial penetration weld eliminates the need to cut a hole in the anchor plate.

The Iowa DOT uses an electronic document submittal system (Doc Express) to facilitate shop drawing review of routine non-complex projects [IDOT SS 1105.03]. For consultant projects, email notifications are sent directly to the consultant reviewer. Consultants will review, stamp, and transition the shop drawings in Doc Express. The procedure in Figure 5.5.1.4.3-2 shall be followed for all shop drawings reviewed by consultants.

Weld procedures are reviewed by the Construction and Materials Bureau.

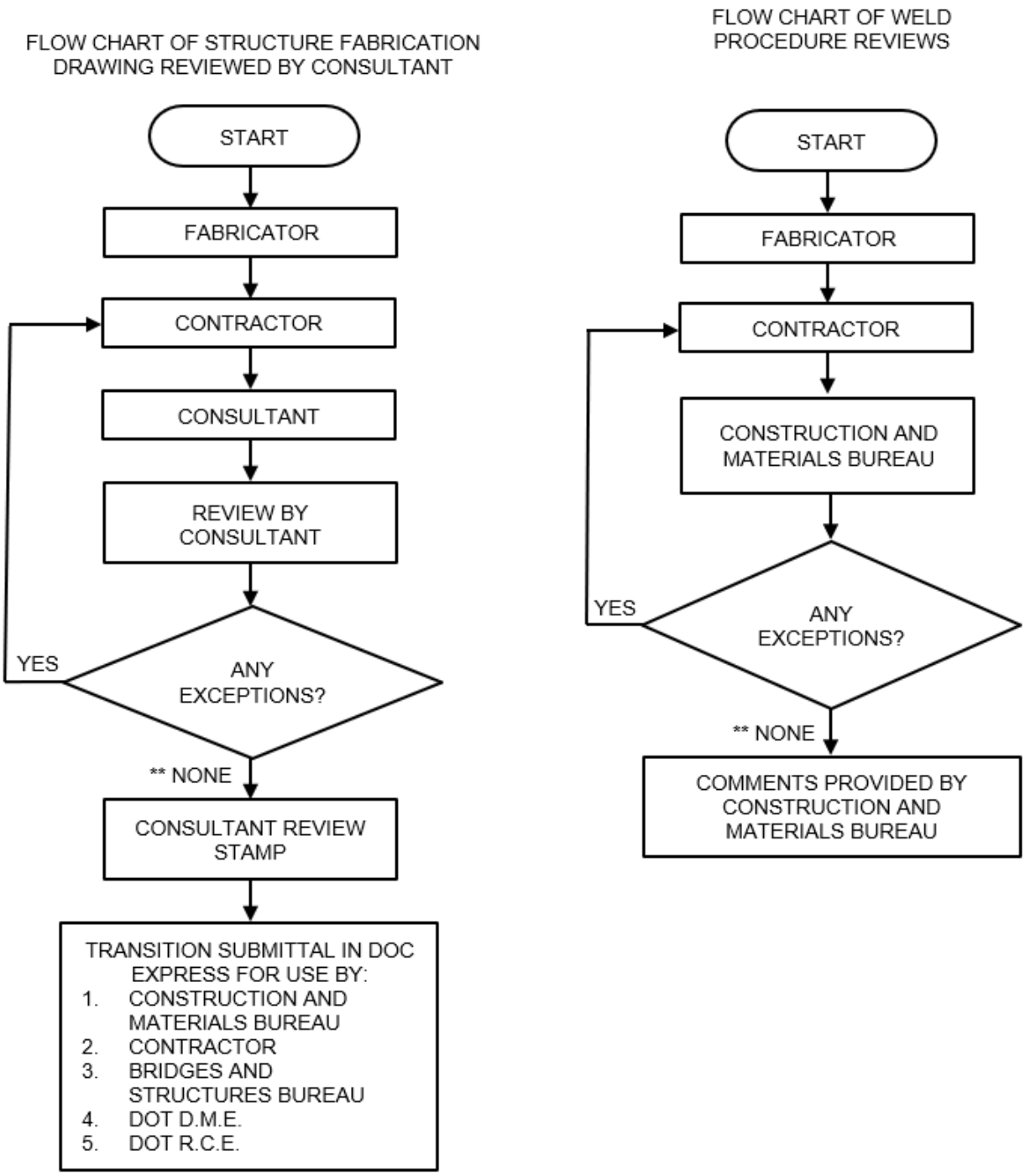

Figure notes:

* There is a separate approval process between the fabricator and the Iowa DOT Construction and Materials Bureau for welding procedures, quality control, quality assurance, etc.

** Including "MAKE CORRECTIONS NOTED (NO RESUBMITTAL NECESSARY)"

Figure 5.5.1.4.3-2. Flow chart for shop drawing review by consultant

5.5.1.4.4 Erection submittals and sequences

Steel girder erection is the process of transporting, handling and assembling the bridge components to result in a bridge structure that meets all the geometric and structural requirements of the contract documents. Steel girder erection is the responsibility of the contractor.

Contractors are responsible for preparing a Girder Erection Plan (GEP) consisting of three parts: erection plans, erection procedures, and erection engineering calculations. The contractor's erection plans and procedures describe the detailed means and methods to be used by the contractor in constructing the bridge girders and associated structural elements. Erection engineering calculations are prepared by or for the contractor in order to establish the viability of the contractor's erection plans and procedures. The level of detail in the contractor's GEP is dependent on the complexity of the structure and the site itself.

For typical steel girder structures the contractor is not required to provide a GEP submittal for review. The contractor shall provide a GEP submittal for review when one or more of the following conditions is applicable:

- Shoring towers and/or strong-backs are used by the contractor.
- Erection is from floating equipment.
- The girder system includes lateral bracing.
- Girder radius of curvature is less than 20 times the span length.
- The bridge is over or adjacent to a railroad.

In general, designers should be able to determine which bridge designs will likely require shoring towers, strong-backs, or floating equipment and thereby decide which designs require a GEP submittal with respect to those conditions. Designers shall require a GEP submittal in the bridge plan set per CADD Note E70 [BDM 13.2.2, IDOT SS 1105.03]. The note makes reference to the special provision "Girder Erection Plan". The engineer of record shall review GEP submittals for compliance. A 2599-9999XXX "Girder Erection Plan" lump sum bid item shall be used when a GEP is required.

Designers shall consider including a Suggested Girder Erection Sequence (SGES) in the plans whenever a GEP submittal is required or when complex traffic control requirements are needed for a bridge site. Consult with the supervising Unit Leader as to the necessity of including an SGES. At a minimum, the SGES shall include the following:

- Details for the different stages of the suggested erection sequence in plan view.
- Include at least one profile view if shoring towers are assumed. Indicate temporary barrier rail if active traffic lanes are within 30 feet of unprotected shoring towers.
- A description of the suggested erection sequence for each stage.

Include CADD Note E905 [BDM 13.9.2] if an SGES is provided in the plans.

5.5.1.4.5 Fracture critical members

FCMs are defined as components in tension whose failure is expected to result in the collapse of the bridge or the inability of the bridge to perform its function. The most common types of FCMs are tension flanges and parts of webs of flexural members such as beams and girders. [Examples of FCM include tension members of trusses, particularly the lower chords, and in some cases diagonals. The rib of an arch may experience tension and may be considered as FCM.]

Design procedures for FCMs start by evaluating the need for an FCM. FCMs are ideally eliminated at the planning and design stage. FCMs are used if no appropriate or acceptable alternative to their use is found. When FCMs are incorporated into a bridge, design methods, practices, and polices to mitigate the risk associated with their use shall include:

- Designing for fatigue and fracture limit state in the AASHTO LRFD Bridge Design Specifications, which requires the design details to provide a minimum acceptable level of resistance to fatigue and fracture. These design specifications include the latest research in the area of fatigue and fracture in steel bridge elements, along with prescribing design loading and load factors that specifically address the unique aspects of fatigue in steel bridges.

- Avoiding welded details more prone to fatigue crack initiation. Fatigue cracks usually originate at a weld in a steel member. Commonly encountered welded steel details are categorized by the susceptibility to fatigue crack initiation.
- Using modern steels in the design with high levels of resistance to fracture, such as High Performance Steel which was specifically developed for high fracture toughness.
- Consider converting a FCM into a non-FCM by utilizing bolting or introducing alternate load paths within the member (i.e. the use of a twin welded plate I-girder for a pier cap in lieu of a single welded plate box girder).
- Incorporating a robust QA/QC of the bridge design to identify and remove any errors and mistakes in the design and design details.
- Training bridge designers on the features of FC bridge elements and expected outcomes of design decisions with FCMs.
- Incorporating features into the design details that facilitate in-service inspection of FCMs. These include such items as providing access doors to the inside of tub/box sections along with openings in diaphragms inside of tub/box members that are adequately sized for inspection personnel and equipment to pass through. Also, the insides of FC tub/box members are required to be painted white in the bridge plans and specifications which assist in finding fatigue-related cracks by highlighting cracking when coating flakes and making limited lighting more effective due to the lightened surface. Electrical outlets are also called for in design plans for tub/box members to provide lighting during inspection of the interiors.
- Providing bridge design plans that identify all FCMs in the bridge and requiring the bridge fabricator to adhere to the Fracture Control Plan outlined in the AWS/AASHTO Bridge Welding Code, D1.5.
- Providing plans that prohibit welds to FCMs during field erection.
- Consult with the Chief Structural Engineer or the Bridge Project Development Engineer before finalizing the design.

C5.5 Steel Girders and Beams

C5.5.1.1.1 Policy overview

1 July 2015 ~ End Span Policy

The Bureau generally has followed a policy that the end span should not exceed 54% of the adjacent interior span. Origin of the policy is uncertain but apparently is the result of some study during the design of the first continuous welded plate girder bridge many years ago.

Although not stated in the BDM, Bureau policy is that new and replacement bridges should not require positive connections at the abutment or counterweights in order to prevent uplift. Recent study (2015) based on the LRFD code indicates that the end span should be at least 60% of the adjacent interior span in order to prevent uplift in the fully-constructed condition. In light of this study the end span shall not be less than 60% of the adjacent interior span. Additionally, the end span should generally not be greater than 60% of the adjacent interior span unless there are uplift concerns or other factors present. CWPG bridges with integral or semi-integral abutments are subject to the 60% end span requirements, and should not require end span lengths exceeding 60% due to uplift in the fully-constructed condition since the concrete diaphragm acts as a built-in counterweight and, in the case of integral abutments, have a positive connection. CWPG bridges with stub abutments having large skews and/or horizontal curvature may need end span lengths that exceed 60% in the fully-constructed condition, however, it is generally thought that the number of cases will be relatively few. If uplift concerns are present in the construction phase, contact the Chief Structural Engineer about providing temporary tie-downs or temporary counterweights.

2010 ~ Interior/Exterior Girder Design

During design of the I-74 approach spans the engineering consultant performed a detailed comparison of three options: Case 1, separate interior and exterior design sections, Case 2, same section all girders based on Iowa DOT criteria, and Case 3, same section all girders based on Illinois DOT design criteria. Case 1 with the different design sections clearly had an initial cost savings over either of the single section options. Based on this case study it is desirable to consider the option of using different design sections for interior and exterior girders for major bridges.

C5.5.1.2.3 Fatigue

1 July 2014

Previous to this update, $ADTT_{SL}$ was determined based on the frequency of truck traffic at the center girder of a multi-girder bridge with one lane of traffic in each direction. This same $ADTT_{SL}$ was then applied to each girder in the cross-section. Under the previous policy, $ADTT_{SL}$ was set equal to ADTT*0.85. ADTT is the total truck traffic in both directions and 0.85 is the p-value from AASHTO-LRFD Table 3.6.1.4.2-1. The full ADTT was used because both lanes of traffic are adjacent to the center girder and therefore affect it. The p-value of 0.85 was used, but is somewhat inconsistent with the philosophy that the center girder would experience the full frequency of both lanes of traffic. Perhaps a p-value of 1.00 was assumed to be too conservative. Ultimately applying this $ADTT_{SL}$ to the exterior girder which typically has a larger live load distribution factor and smaller effective slab width was determined to be overly conservative.

After some investigation, it appears an exterior girder design will typically be controlled by fatigue when $ADTT_{SL}$ = 0.60*ADTT*1.00 for the exterior girder versus a center girder design using the $ADTT_{SL}$ in the paragraph above. In this case, ADTT is still the total truck traffic in both directions, but 0.60*ADTT is the number of trucks travelling in one direction and 1.00 is the p-value for only one lane of traffic being available to trucks travelling in one direction.

As a result, the updated BDM policy will follow the AASHTO LRFD code when determining $ADTT_{SL}$. The only difference is Iowa's use of 0.60 rather than 0.55 as found in AASHTO LRFD C3.6.1.4.2 for determining the number of trucks travelling in one direction.

C5.5.1.3.2 Limit states

2011 ~ Strength V Limit State During Construction and Other Revisions

Based on the description in the AASHTO LRFD Specifications of the Strength V limit state it seemed that it was not intended to be checked during construction. However, a steel plate girder example by M.A. Grubb and R.E. Schmidt distributed nationally by the U.S. Department of Transportation (USDOT) and National Steel Bridge Alliance (NSBA) includes Strength V during construction. The description of Strength V notes: "…plus 1.35 times the design live load (or any temporary live loads acting on the structure when evaluating the construction condition), plus 0.4 times the wind load on the structure, plus 1.0 times the wind on the live load. For evaluating the construction condition under the STRENGTH V load combination, the load factor for temporary dead loads that act on the structure during construction is not to be taken less than 1.25 and the load factor for any non-integral wearing surface and utility loads may be reduced from 1.5 to 1.25." Based on the example and other sources it is clear that Strength V should be checked during construction when appropriate, and articles in the design manual have been revised with respect to construction limit states. (There are several other changes, also.) The steel example is available at the following URL:

http://www.virginiadot.org/business/resources/SteelDesignExample.pdf

C5.5.1.4.1.6 Flanges

From 1977 until 2002 the Bureau followed the policy of recommending a flange thickness limit of 2 inches. The limit was stated in FHWA Notices N 5040.23 dated 16 February 1977 and N 5040.27 dated 17 August 1977. The Bureau now uses a larger recommended flange thickness limit of 2.5 inches based on Table 4.4 in *Bridge Welding Code, AASHTO/AWS D 1.5M/D1.5: 2002.* The minimum preheat and interpass temperature generally is the same for plates 1 ½ to 2 ½ inches thick.

In the 1970s the Bureau followed a rule that the top flange area should be at least 45% of the bottom flange area. Although no explanation for the rule is available, the rule probably promoted constructibility by ensuring a certain amount of lateral stiffness for a welded plate girder. Because of the constructibility article in the LRFD specifications [AASHTO-LRFD 6.10.3], the Bureau has rescinded the 45% rule and requires that the designer meet the constructibility provisions in the AASHTO LRFD specifications.

C5.5.1.4.1.12 Deflection and camber

2010 ~ CWPG Camber

Large utility pipes were added to the list of dead loads to consider in camber computations.

C5.5.1.4.1.16 Diaphragms and cross frames

At the time of the January 2006 Bridge Design Manual update the standard cross frames used by the Bureau were redesigned to meet AASHTO LRFD specifications (even though the manual still was based on the AASHTO standard specifications). The following is a summary of the AASHTO and AISC changes that affected the redesign.

- Single angles connected with bolts and welds no longer are permitted to use K = 0.75; K must be 1.0 [AASHTO-LRFD 4.6.2.5]. This 2005 AASHTO LRFD change is in the direction of conservatism and makes published cross frame examples obsolete. Because many cross frame members are at the KL/r<=140 limit for compression members, the change has a significant effect on member size.
- Webs of rolled shapes (and presumably stems of tees) no longer are permitted to be 0.23 inches thick; they now must be 0.25 inches thick [AASHTO-LRFD 6.7.3]. This 1998 or earlier AASHTO LRFD change from the standard specifications is in the direction of conservatism and makes our use of WT 4x9 (with a stem thickness of 0.230 inches) obsolete. We need to use at least a WT 4x10.5.
- Outstanding legs of angles no longer are permitted to have a maximum b/t ratio of 16; they now must have a ratio of 15.89 for A36 steel or less for higher grades of steel or single angles [AASHTO-LRFD 6.9.4.2]. This 1998 or earlier AASHTO LRFD change from the standard specifications is in the direction of conservatism and requires thicker angle legs in some cases.
- For relatively thick angle legs, AISC permits an increase in flexural capacity from $1.25M_y$ to $1.50M_y$. This change in the 2000 AISC single angle specification reduces conservatism in angle capacity for angles with relatively thick legs.

2010 ~ Cross Frame and K-Frame Member Design

Rules added to the 5th Edition of the AASHTO LRFD Specifications in 2010 cover all compression buckling modes and flexure for typical diaphragm and cross frame members, and it is no longer necessary to consult the AISC LRFD Specifications for design of angles and tees.

Where diagonals cross, there is the question of whether the crossing connection can be considered a brace point for out-of-plane buckling. Two papers in AISC's *Engineering Journal* give justification for a brace point if one of the two diagonals is in tension. If both diagonals are in compression, however, the crossing connection is not a brace point for out-of-plane buckling.

Critical cases for design of the cross frames were the following:

- Pier frame: diagonal in completed structure, Strength III for wind, with center brace point
- Intermediate frame: diagonal during construction, Strength III for wind, without center brace point; diagonal during construction, Strength I for deck pour, without center brace point
- Intermediate frame: strut during construction, Strength I for deck pour

C5.5.1.4.1.18 Additional considerations

Below is an example of a moment table and reaction table. The tables may be modified to address particular project needs. When live load distribution factors are determined based on methods other than AASHTO's approximate methods of analysis a note below the table should be added indicating the methodology. Live load distribution factors for curved steel girder projects may be omitted when distribution is based on a more complex analysis such as a 2D grid analysis or 3D finite element analysis, however, a note indicating the analysis methodology should be included.

MOMENT TABLE (ft/kips)												
LOAD NAME	LOAD – kips/ft		POSITIVE MOMENT						NEGATIVE MOMENT			
			SPAN 1		SPAN 2		SPAN 3		PIER 1		PIER 2	
	INT.	EXT.	INT.	EXT.	INT.	EXT.	INT.	EXT.	INT.	EXT.	INT.	EXT.
DC1	1.038	0.880	570	509	570	509	603	535	-3350	-2927	-4865	-4250
DC2	0.213	0.213	135	130	135	130	123	120	-448	-455	-642	-651
DW	0.176	0.176	111	108	111	108	120	101	-440	-385	-633	-550
HL-93 LIVE LOAD + IMPACT			2495	2677	2495	2677	2399	2535	-2480	-2763	-3376	-3735
LIVE LOAD DISTR. FACTOR			0.800	0.829	0.758	0.829	0.785	0.829	0.775	0.829	0.791	0.829

REACTION TABLE (kips)										
LOAD NAME	LOAD – kips/ft		REACTION AT SOUTH ABUT.		REACTION AT PIER 1		REACTION AT PIER 2		REACTION AT NORTH ABUT.	
	INT.	EXT.	INT.	EXT.	INT.	EXT.	INT.	EXT.	INT.	EXT.
DC1	1.038	0.880	36	32	233	196	222	194	40	35
DC2	0.213	0.213	7	7	34	34	34	34	7	7
DW	0.176	0.176	7	6	33	29	33	29	7	6
HL-93 LIVE LOAD + IMPACT			113	97	239	205	246	211	119	102
LIVE LOAD DISTR. FACTOR			0.968	0.829	0.968	0.829	0.968	0.829	0.968	0.829

MOMENT AND REACTION TABLE NOTES:

MOMENTS AND REACTIONS ARE UNFACTORED.
DC1 LOAD VALUE (kips/ft) ONLY INCLUDES CONCRETE DECK WEIGHT AND CONCRETE HAUNCH WEIGHT AND EXCLUDES STRUCTURAL STEEL WEIGHT (GIRDERS, DIAPHRAGMS, CROSS FRAMES, AND LATERAL BRACING).
DC1 MOMENTS (ft/kips) AND REACTIONS (kips) INCLUDE DC1 CONCRETE AND STRUCTURAL STEEL LOADS.
DC2 CORRELATES WITH BARRIER RAIL LOAD WHICH IS DISTRIBUTED EQUALLY TO ALL GIRDERS.
DW CORRELATES WITH FUTURE WEARING SURFACE LOAD WHICH IS DISTRIBUTED EQUALLY TO ALL GIRDERS.

TABLE OF CONTENTS ~ CONCRETE SLABS

5.6 Concrete Slabs
5.6.1 CCS
5.6.1.1 General
5.6.1.1.1 Policy overview
5.6.1.1.2 Design information
5.6.1.1.3 Definitions
5.6.1.1.4 Abbreviations and notation
5.6.1.1.5 References
5.6.1.2 Loads
5.6.1.2.1 Dead
5.6.1.2.2 Live
5.6.1.2.3 Dynamic load allowance
5.6.1.2.4 Railing
5.6.1.2.5 Earth pressure
5.6.1.2.6 Earthquake
5.6.1.2.7 Construction
5.6.1.3 Load application to superstructure
5.6.1.3.1 Load modifier
5.6.1.3.2 Limit states
5.6.1.4 Continuous slabs
5.6.1.4.1 Analysis and design
5.6.1.4.1.1 Analysis assumptions
5.6.1.4.1.2 Materials
5.6.1.4.1.3 Design resistance
5.6.1.4.1.4 Strip properties
5.6.1.4.1.5 Moment
5.6.1.4.1.6 Shear
5.6.1.4.1.7 Camber and deflection
5.6.1.4.1.8 Fatigue
5.6.1.4.1.9 Additional considerations
5.6.1.4.2 Detailing

5.6 Concrete Slabs

NOTE: The three span J40-25 and J44-25 continuous concrete slab (CCS) bridge standards accommodate MASH railings. ~~Until the three span J44 standards are updated to accommodate MASH railings all continuous concrete slab (CCS) bridges with a 44-foot wide roadway shall use the standard TL-4 or TL-5, F-shape barrier rail and open rail shown on the J44-series plans as appropriate.~~

5.6.1 CCS

5.6.1.1 General

[AASHTO-LRFD Section 9, A13]

The design procedures described in this article meet AASHTO LRFD Specifications [AASHTO-LRFD Section 9 and A13], with minor modifications. The designer also should review related manual articles for decks [BDM 5.2], railings [BDM 5.8.1], deck drains [BDM 5.8.4], falsework [BDM 11], abutments [BDM 6.5], and piers [BDM 6.6].

5.6.1.1.1 Policy overview

[AASHTO-LRFD 2.5.2.6.3, 4.6.2.1.3, 4.6.2.3, 9.7.1.3]

For relatively short stream and valley crossings with construction conditions that permit use of falsework, the Bureau selects continuous concrete slab (CCS) superstructures.

The Bureau requires that CCS superstructures be designed by the load and resistance factor design (LRFD) method. To facilitate the design of typical CCS bridges for state projects the Bureau has J-series, three-span standards designed for two different roadway widths, 40, and 44 feet and four different skews, 0, 15, 30, and 45 degrees. These J40, and J44 standard bridges have spans, lengths, and depths summarized in Table 5.6.1.1.1. Ratios between interior and end spans are approximately 1.3 for efficiency. The standard bridges have integral abutments and pile bent piers with a choice of treated timber piles or steel H-piles.

Table 5.6.1.1.1. Lengths, spans, and depths for J40 and J44 three-span continuous concrete slab bridges

Length (1) feet	End Span (2) feet	Interior Span (3) feet	Depth inches
70	21.00	28.00	14.50
80	24.50	31.00	15.25
90	27.50	35.00	16.25
100	30.50	39.00	17.50
110	33.50	43.00	18.50
120	36.50	47.00	20.00
130	39.50	51.00	21.25
140	42.50	55.00	22.50
150	45.50	59.00	24.00

Table notes:

(1) Length is measured from centerline of abutment to centerline of abutment.
(2) End span is measured from centerline of abutment to centerline of pier.
(3) Interior span is measured from centerline of pier to centerline of pier.

The standards require revision if loads are increased, if span lengths are varied from those on the plan sheets, or if the number of spans is changed. The standard three-span bridges cannot safely be lengthened with additional interior spans unless the entire superstructure design is re-evaluated and modified.

The depths in the table are 5% to 13% less than the minimum depths based on the span-to-depth ratio criteria given in the AASHTO LRFD Specifications [AASHTO-LRFD 2.5.2.6.3]. The depths in the table rely on the fact that previous standard three-span bridges have performed well with respect to deflection. For nonstandard bridges that require redesign due to span arrangements, however, the designer should typically meet the AASHTO minimum depth. The maximum depth for CCS bridges shall be limited to 24 inches and maximum span length of 59’-0”.

Cross sections in the standards show a crowned slab of relatively constant thickness formed on the bottom with a double slope. For the builder’s use during construction, the Bureau requires the designer to provide top of slab elevations at several longitudinal lines at constant 8- to 10-foot intervals on each span.

For typical CCS superstructures, live loads may be distributed by means of the equivalent strip rules [AASHTO-LRFD 4.6.2.1.2, 4.6.2.1.4a and b, and 4.6.2.3].

The Bureau limits skew of continuous concrete slab bridges to 45 degrees. For all skews of 45 degrees or less the primary longitudinal slab reinforcement is designed without regard for skew, neglecting the permissible reduction factor in the AASHTO LRFD Specifications [AASHTO-LRFD 4.6.2.3]. The reinforcement is placed parallel with the longitudinal centerline of the bridge. For skews of 15 degrees or

less the transverse reinforcement is placed at the skew angle. For skews greater than 15 degrees the transverse reinforcement is placed perpendicular to the longitudinal centerline of the bridge. The Bureau does not orient longitudinal reinforcement perpendicular to supports for skews greater than 25 degrees [AASHTO-LRFD 9.7.1.3].

Except for unusual design conditions, the Bureau supports continuous concrete slab superstructures on integral abutments and pile bent piers. For typical bridges the Bureau prefers a monolithic cap on a pile bent but, in situations where the monolithic cap would cause excessive stresses or construction difficulties, the designer may use a non-monolithic cap. Plans for the standard three-span CCS bridges include both monolithic and non-monolithic options.

The J40-25 and J44-~~14~~ 25 standards which are to be used for interstate and primary bridges include stainless steel reinforcement between the barrier rail and bridge slab/wing and between the (tied) approach slab and integral abutment approach paving notch.

For the relatively shallow slab superstructure, thermal expansion or contraction causes eccentric pressure forces from the fill behind abutments and from the berm in front of abutments. The pressure forces conservatively are assumed to be from full passive pressure. The forces cause end moments that shift reinforcing cutoff points and lengthen the regions of negative moment in end spans but should not reduce positive moment reinforcing. Nonstandard CCS designs need to include the end moments in strength and service limit state checks.

5.6.1.1.2 Design information

The Soils Design Unit usually does not provide the specific soil properties necessary for computations of passive pressure for individual bridges. Considering typical site conditions and maintenance procedures, the Bureau conservatively assumes that both the fill behind the abutment and the berm in front of the abutment are cohesive soils. The Soils Design Unit recommends the properties in Table 5.6.1.1.2 for typical cohesive soils.

Table 5.6.1.1.2. Recommended soil properties for typical CCS fill and berm soils

Soil Property	Recommended Design Value
w, unit weight of soil	0.130 kcf
ϕ, angle of internal friction	11.31 degrees (1:5 slope)
c, cohesion	0.600 ksf

If the soils information for a CCS bridge indicates that the fill behind abutments or the soil for the berm will have larger angles of internal friction or cohesion than the recommendations, the designer shall use the properties specific to the bridge site.

5.6.1.1.3 Definitions

Unit Leader is the supervisor of the Bridges and Structures Bureau Preliminary Bridge Design Unit, Final Design Unit, or Consultant Coordination Unit.

5.6.1.1.4 Abbreviations and notation

[AASHTO-LRFD 3.3.2, 3.10.4.2]

c, cohesion, ksf (kPa)
CCS, continuous concrete slab
DC, dead load of deck, sidewalk, railings, and nonstructural attachments other than utilities [AASHTO-LRFD 3.3.2]
DW, dead load of future wearing surface and any utilities attached directly to the deck [AASHTO-LRFD 3.3.2]

h, depth below top of slab or top of berm, feet
HPC, high performance concrete
IDC, improved durability concrete
$\mathbf{K_p}$, passive pressure coefficient = $\tan^2 (45 + \phi/2)$
LRFD, load and resistance factor design
$\mathbf{S_{D1}}$**,** horizontal response spectral acceleration coefficient at 1.0-sec. period modified by long-period site factor [AASHTO-LRFD 3.10.4.2]
n, modular ratio
$\mathbf{p_p}$, passive pressure (Rankine Theory), ksf
s, shear resistance, ksf
w, unit weight of soil, kcf
σ, vertical pressure at the horizontal shear plane, ksf
ϕ, angle of internal friction

5.6.1.1.5 References

Mahmoudzadeh, M., R.E. Davis, and F.M. Semans. *Modification of Slab Design Standards for Effects of Skew.* Sacramento: California Department of Transportation, 1984.

Construction and Materials Bureau. *Construction Manual.* Ames: Construction and Materials Bureau, Iowa Department of Transportation, 2006. (Available on the Internet at: http://www.iowadot.gov/erl/current/CM/Navigation/nav.pdf)

Schneider, E.F. and S.B. Bhide. *LRFD Design of Cast-in-Place Concrete Bridges.* Skokie: Portland Cement Association, 2006.

5.6.1.2 Loads

[AASHTO-LRFD 4.6.2.1.4b, 4.6.2.3]

The continuous concrete slabs in the standards are designed as two longitudinal strips: an interior strip and an edge beam. For design the Bureau sets the interior strip 18 inches wide so that it fits a three-bar repetitive pattern for bars spaced at 6 inches. The interior strip is derived from an equivalent strip used to distribute live load [AASHTO-LRFD 4.6.2.3].

The edge beam is below the railing and the outer portion of the slab. The edge beam must be designed for a wheel line, and the beam width is governed by rules in the AASHTO LRFD Specifications, which will result in a width much larger than used by the Bureau in the past [AASHTO-LRFD 4.6.2.1.4b]. Usually the width will default to 72 inches. The Bureau requires the edge beam even if it is composite with a concrete barrier rail.

Loads are applied differently to the interior strip and the edge beam, as described in the following articles.

5.6.1.2.1 Dead

[AASHTO-LRFD 3.3.2]

For design of typical CCS superstructures the Bureau does not make a distinction between dead load applied before or after curing of the slab. Because the slab is not loaded until the falsework is removed after curing of the slab, all dead load is applied to the same continuous superstructure. All parts of the superstructure are supported by the slab, but usually none are considered to act compositely with the slab. Because of differences in load factors, however, the designer does need to make a distinction between DC, dead load of structural components and nonstructural attachments, and DW, dead load of wearing surfaces and utilities [AASHTO-LRFD 3.3.2].

The interior strip shall be designed to carry the following three dead loads: the weight of the slab strip, the future wearing surface of 0.020 ksf on the strip, and the strip's share of the weight of the barrier rails distributed over the entire superstructure width.

The edge beam shall be designed to carry the following three dead loads: the weight of the edge beam, the future wearing surface of 0.020 ksf on the portion of roadway that is part of the beam, and 50% of the barrier rail weight directly above the edge beam, which generally will be a conservative load distribution. The 50% distribution is discussed in the commentary for this article.

Dead loads for additional superstructure components, such as raised sidewalks, raised medians, and utilities, shall be added to the interior strip and edge beam when applicable based on the tributary areas.

5.6.1.2.2 Live

[AASHTO-LRFD 3.6.1.1.2, 3.6.1.2, 3.6.1.3.3, 3.6.1.6, C3.6.1.2.1, C3.6.1.3.1]

Unless special requirements govern the design, vehicular live load (LL) for CCS superstructures shall be HL-93 [AASHTO-LRFD 3.6.1.2]. It shall be applied as discussed in the AASHTO LRFD Specifications [AASHTO-LRFD 3.6.1.3.3].

In unusual situations identified by the Chief Structural Engineer, where a bridge will experience a high percentage of truck traffic, accumulation of trucks due to traffic flow control, or special industrial loads, the designer will need to consider additional loading as discussed in the AASHTO LRFD Specifications commentary [AASHTO-LRFD C3.6.1.2.1, C3.6.1.3.1]. In these situations the designer shall consult with the Chief Structural Engineer.

Sidewalk and other live loads shall be added to the superstructure live load when applicable. A pedestrian load (PL) of 0.075 ksf shall be applied to all sidewalks [AASHTO-LRFD 3.6.1.6] and considered simultaneously with the vehicular live loads as specified for multiple presence of live load [AASHTO-LRFD 3.6.1.1.2].

The interior strip, as well as the edge beam, shall be designed for live load with main reinforcement parallel with traffic regardless of skew, but skew shall not exceed 45 degrees.

5.6.1.2.3 Dynamic load allowance

[AASHTO-LRFD 3.6.2.1]

The dynamic load allowance (IM) shall be taken from the AASHTO LRFD Specifications [AASHTO-LRFD 3.6.2.1]. It shall be applied to truck and tandem live loads on the interior strip and on the edge beam.

5.6.1.2.4 Railing

[AASHTO-LRFD A13]

Railing loads for design of the transverse reinforcing near the slab edge shall be in accordance with the AASHTO LRFD Specifications [AASHTO-LRFD A13]. Except in the case of unusual design criteria, design forces for traffic railings shall be taken at Test Level Four (TL-4) or Test Level Five (TL-5) in accordance with BDM 5.8.1.

The transverse slab reinforcing near the railings is designed for the standard TL-4 or TL-5, single slope barrier rail and open rail shown on the J-series plans. Yield line values required for TL-4 and TL-5, single slope barrier rails are given in the decks section of this manual [BDM 5.2.2.4]. The open rail option is not typically used on state highways and should only be used with permission of the Chief Structural Engineer.

The railing load applied to the slab is intended to make the slab stronger than the railing so that an overload will cause collapse of the railing but not of the slab. Therefore, the designer should be cautious about strengthening a barrier rail to avoid requiring additional transverse reinforcement for the slab.

5.6.1.2.5 Earth pressure

As the CCS superstructure expands or contracts with temperature change, the superstructure will be restrained by earth pressure (EH). For the typical superstructure with integral abutments, the movement conservatively is assumed to be large enough to develop passive earth pressure at the service limit state regardless of bridge length.

As the superstructure expands, passive pressure will develop in the fill behind the abutment. Although the fill behind the abutment initially is granular, the region behind the abutment sometimes is mud-pumped to fill voids as part of approach slab maintenance operations. The mud-pumped region then is likely to push against cohesive soil beyond the granular fill region. Therefore the Bureau conservatively assumes that the fill behind the abutment is cohesive soil.

As the superstructure contracts, passive pressure will develop in the berm, which also is assumed to be cohesive soil. The designer should check the berm at the service limit state to ensure that the force developed on the horizontal shear surface is larger than the force from the passive pressure that will develop in front of the abutment. The service limit state passive pressures and shear surface are illustrated in Figure 5.6.1.2.5.

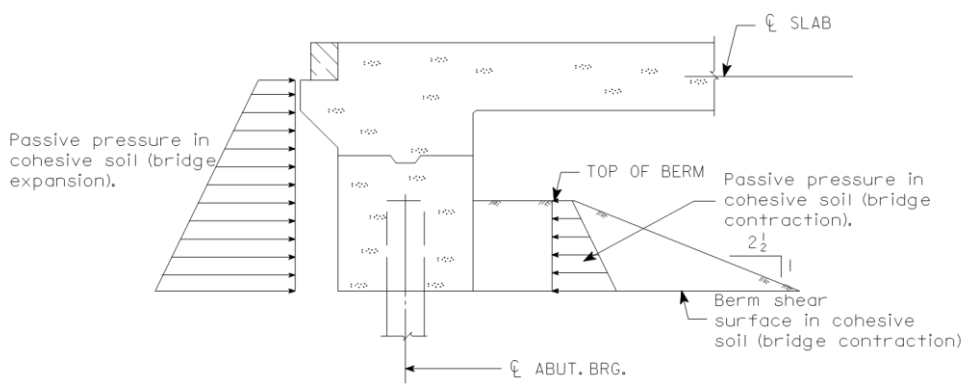

Figure 5.6.1.2.5. Service limit state passive pressures and shear surface at a CCS integral abutment

For computing the service limit state passive pressures and the shear resistance of the berm the designer shall use the following formulas with the soil properties recommended for the bridge site and abutment details [BDM 5.6.1.1.2].

$$p_p = whK_p + 2c\sqrt{K_p}$$

Where:

p_p = passive pressure (Rankine Theory, service limit state), ksf
w = unit weight of soil, kcf
h = depth below top of slab or top of berm, feet
K_p = passive pressure coefficient = $\tan^2 (45 + \phi/2)$
ϕ = angle of internal friction
c = cohesion, ksf

$$s = c + \sigma \tan \phi$$

Where:

s = shear resistance (service limit state), ksf
c = cohesion, ksf
σ = vertical pressure at the horizontal shear plane, ksf
ϕ = angle of internal friction

5.6.1.2.6 Earthquake

[AASHTO- LRFD 3.10.3.1, 3.10.4.2, 3.10.6, 4.7.4.1]

Based on the acceleration coefficient S_{D1}, all of Iowa with Site Class A through E shall be classified as Seismic Zone 1 [AASHTO-LRFD 3.10.3.1, 3.10.4.2, 3.10.6]. Thus for typical bridges no seismic loading (EQ) or analysis is required [AASHTO-LRFD 4.7.4.1]. However, for unusual projects such as bridge sites determined to be Site Class F and for Missouri River and Mississippi River bridges the designer shall determine the seismic zone and perform seismic analysis as required by the AASHTO LRFD Specifications.

5.6.1.2.7 Construction

For most bridge projects it is assumed that construction can take place without cranes, construction vehicles, construction equipment, and concentrated quantities of construction materials on the bridge. If, however, the contractor does need to place loads on the bridge larger than those permitted by the Standard Specifications for Highway and Bridge Construction [IDOT SS 1105.12, D], the contractor will be required to submit structural analysis by an Iowa-licensed engineer for approval. Thus the bridge designer may be required to review construction loading after letting of the bridge contract.

5.6.1.3 Load application to superstructure

5.6.1.3.1 Load modifier

[AASHTO-LRFD 1.3.2, 3.4.1]

Load factors shall be adjusted by the load modifier, which accounts for ductility, redundancy, and operational importance [AASHTO-LRFD 1.3.2, 3.4.1]. For typical CCS bridges the load modifier shall be taken as 1.0.

5.6.1.3.2 Limit states

[AASHTO-LRFD 3.4.1, 3.4.2]

For the typical CCS bridge superstructure, the designer shall consider the following limit states [AASHTO-LRFD 3.4.1].

- Strength I, superstructure with vehicles but without wind
- Extreme Event II, collision by vehicle (railing)
- Service I, superstructure with vehicles and wind
- Fatigue

Although other limit states are unlikely to control for typical bridges, the designer should be alert to special conditions that require consideration of additional limit states.

During construction the superstructure will be supported on the substructure as well as on falsework, which will carry most of the construction loads. The falsework designer shall consider all appropriate construction loads and load combinations in design of the falsework [BDM 11].

Load combinations and load factors for limit states are given in the AASHTO LRFD Specifications [AASHTO-LRFD 3.4.1, 3.4.2].

5.6.1.4 Continuous slabs

5.6.1.4.1 Analysis and design

The Bureau requires the LRFD method for design of CCS superstructures.

5.6.1.4.1.1 Analysis assumptions

For CCS bridges supported by typical integral abutments and pile bents, the designer may consider the interior strip and edge beam to be continuous beams with downward extensions for lateral soil loads at abutments and with simple supports at abutments and pile bents. However, if piles supporting abutments are less than 15 feet long, the designer shall evaluate the stiffness of the piles with respect to the stiffness of the slab superstructure. It may be necessary to analyze the slab superstructure along with the piles as a continuous frame.

5.6.1.4.1.2 Materials

Unless otherwise specified, concrete for the slab shall be structural concrete, Class C, as defined in the standard specifications [IDOT SS 2403]. Class C concrete shall be assumed to have a 28-day strength of 4.0 ksi.

If requested by the District and approved by the Bridge Project Development Engineer, high performance concrete (HPC) will be specified for the slab and other bridge components, and the designer shall consult the developmental specification prepared by the Construction and Materials Bureau for the 28-day concrete strength, IDOT Developmental Specification for High Performance Concrete for Structures.

Starting with the October 2025 letting all Class C and HPC concrete slabs shall be constructed with polypropylene fibers in the concrete deck mix according to the following:

- Reference Developmental Specifications for Fiber Reinforcement for Structural Concrete [DS-23076] on the plans.
- Include 2403-1000005 bid item quantity in CY for Fiber Reinforcement for Structural Concrete.
- Include 2403-1000010 bid item quantity as LS for Trial Batch and Test Placement (Fiber Reinforced Concrete).
- The Bid Item Reference Notes and “Summary of Quantities” plan sheet shall clearly indicate where fiber is being used.

If requested by District 3 and approved by the Bridge Project Development Engineer, improved durability concrete (IDC) will be specified for the slab and related bridge components. The IDC concrete will have the same strength as Class C concrete. For further information the designer shall consult the developmental specification prepared by the Construction and Materials Bureau, IDOT Developmental Specification for Improved Durability Concrete for Bridge Decks.

Unless otherwise specified, reinforcement shall be ASTM A 615/A 615M, ASTM A 996/A 996M, or ASTM A 706/A 706M Grade 60. All barrier rail to bridge slab/wing reinforcement for interstate and primary bridges shall be stainless steel. The Iowa DOT Construction and Materials Bureau Instructional Memorandum “Deformed and Plain Stainless Steel Bars for Concrete Reinforcement” [OM IM 452] contains information on the type and grade requirements for stainless steel bars.

5.6.1.4.1.3 Design resistance

[AASHTO-LRFD 5.5.4.2]

Resistance factors for the slab shall be taken from the AASHTO LRFD Specifications [AASHTO-LRFD 5.5.4.2].

5.6.1.4.1.4 Strip properties

[AASHTO-LRFD 2.5.2.6.3, 4.6.2.1.4b, 5.6.1]

Depth of the slab for a nonstandard superstructure should be set near the traditional minimum depth determined from span-to-depth ratios [AASHTO-LRFD 2.5.2.6.3]. The designer may use less than the minimum depth with appropriate deflection checks.

For the interior strip and the edge beam the uppermost one-half inch shall be neglected. Neglecting the top surface accounts for longitudinal grooving for texture and pavement markings and for the eventual loss of the roadway built-in wearing surface.

For transforming Grade 60 tension reinforcement to Class C concrete at the service and fatigue limit states the modular ratio, n, shall be taken as 8 [AASHTO-LRFD 5.6.1]. For transforming Grade 60 compression reinforcement to Class C concrete, the transformation shall be made using 2n-1. Subtracting one accounts for the concrete displaced by the reinforcement.

For the standard CCS superstructures the longitudinal reinforcing is spaced laterally at 6 inches in three distinct, repetitive lines. Thus it is convenient to set the width of the interior strip at 18 inches for design.

For determining moments, the edge beam width shall be taken as required in the AASHTO LRFD Specifications [AASHTO-LRFD 4.6.2.1.4b].

The railing shall not be included in the section properties for the edge beam.

5.6.1.4.1.5 Moment

[AASHTO-LRFD 5.6.7]

The designer shall use maximum moment envelopes for the Strength I limit state to select reinforcement and locate initial cutoff points. The envelopes shall be plotted for moments at the tenth points of the span or a closer spacing. The designer may use linear interpolation between envelope points.

Using Service I limit state moment envelopes, the designer shall adjust cutoff points as necessary to provide additional reinforcement to meet the crack control requirements at bar cutoff points. The designer shall perform the check using computed service limit state stresses and the severe exposure condition (Class 2).

The moment envelopes shall include the positive and negative effects of end moments caused by passive soil pressures as the bridge expands or contracts. For both the interior strip and the edge beam the passive soil pressures affect the moment diagrams and have significant effects on the envelopes for the end spans, as well as moderate effects on the interior spans.

The designer shall take the design moment at each interior support as the maximum negative moment at the center of the support.

At all sections other than above an interior support the designer shall select reinforcing assuming a singly reinforced cross section. Because an interior support confines the compression region at the bottom of the slab, the section may be designed as a doubly reinforced section.

For the interior strip the designer should place the reinforcing in A, B, and C lines, each with different bar sizes and cut-offs. The designer shall select reinforcing for the edge strip so as to maintain the longitudinal reinforcing pattern for the interior strip from gutter line to gutter line. The remainder of the edge strip reinforcing shall be placed below its railing in D and E lines. The very edge of the slab shall have continuous bars at the corners of the cross section.

5.6.1.4.1.6 Shear

[AASHTO-LRFD 4.6.2.3, 5.12.2.1]

CCS superstructures designed by the equivalent strip method [AASHTO-LRFD 4.6.2.3] may be considered satisfactory for shear [AASHTO-LRFD 5.12.2.1].

5.6.1.4.1.7 Camber and deflection

[AASHTO-LRFD 2.5.2.6.2, 5.6.3.5.2]

Formwork shall be cambered to account for the total short-term and long-term dead load deflection [AASHTO-LRFD 5.6.3.5.2]. The designer shall include a diagram on the plans indicating the required camber at the quarter points of each span for spans not exceeding 40 feet. For longer spans the designer shall indicate the required camber at the sixth points of the span so that the camber is given at intervals not exceeding 10 feet. To provide more accurate values for field cambers the deflections used in cambers calculations for the J standards were based on a concrete compressive strengths of 5,800 psi.

For nonstandard CCS superstructures, the designer shall check deflection for live load plus dynamic load allowance. The deflection shall be limited to 1/800 of each span for bridges designed for vehicles and to 1/1000 of each span for bridges designed for both pedestrians and vehicles [AASHTO-LRFD 2.5.2.6.2].

5.6.1.4.1.8 Fatigue

[AASHTO-LRFD 5.5.3.1, 5.5.3.2]

The designer shall check the fatigue limit state as required for longitudinal reinforcement [AASHTO-LRFD 5.5.3.1, 5.5.3.2].

5.6.1.4.1.9 Additional considerations

[AASHTO-LRFD 5.10.6, 5.12.2.1, 13.6.2, A13]

Transverse distribution reinforcement shall be placed in the bottom of the slab in accordance with the AASHTO LRFD Specifications [AASHTO-LRFD 5.12.2.1]. The Bureau prefers that the bars be placed at 12 inches. See Table 5.6.1.4.2 for direction of all bottom and top transverse reinforcement.

Transverse reinforcement shall be placed in the top of the slab for the greater of the requirements for shrinkage and temperature [AASHTO-LRFD 5.10.6] and for Extreme Event II lateral load on the railing [AASHTO-LRFD 13.6.2]. The Bureau prefers that shrinkage and temperature bars be placed at 12 inches across the entire slab width, and that for additional capacity short #5 bars (j-bars) be placed below the railings and between the temperature bars.

For typical CCS superstructures Extreme Event II lateral load will control transverse reinforcement near the railings. The lateral load shall be applied at the required height and over the required length of railing. For a concrete barrier rail the critical section for determining the reinforcing in the top of the slab shall be the inside face of the rail. If not given in this manual [BDM 5.2.2.4], the length of the slab section resisting the lateral load shall be as determined from the AASHTO LRFD Specifications [AASHTO-LRFD A13], and the reinforcing shall be extended a development length beyond the section. On standard plans the lateral load reinforcement is provided by 5d and 5j1 bars in the top of the slab.

5.6.1.4.2 Detailing

Except for CCS bridges that require superelevation, the top of the slab shall be crowned in the transverse direction with a central parabolic profile and 2.0% slopes toward each railing. The bottom of the slab shall be pitched along straight lines from the centerline of the bridge so that the slab remains a relatively constant thickness.

So that the contractor may set the proper top of slab elevations, the elevations are to be shown in the longitudinal direction at centerlines of piers, centerlines of abutments, and intervals of 8 to 10 feet along

each span. Top of slab elevations in the transverse direction shall be shown at centerline of the approach roadway, end of parabolic crown each side of centerline, each gutter line, midpoint between end of parabolic crown and gutter line, and longitudinal construction joint, if required for staged construction.

For the longitudinal steel, cover shall be 2 ¾ inches for top steel and 1½ inches for bottom steel. In other cases, cover for slab reinforcing shall be 2 inches unless otherwise noted on plans.

Minimum practical spacing for main bars is 4½ inches. The usual spacing is 6 inches. Maximum bar size for slab reinforcing shall be #11.

When two different bar sizes are spliced together, assume the cut-off point for the larger bar is at the center of the splice.

If the cut-off point of a bottom bar is within 2 feet of the centerline of abutment bearing, extend the bar to the end of the slab. If at all possible, reduce bar size or otherwise alter the reinforcing for the slab so that bars can be developed without hooks.

The J40-25 and J44-~~14~~ 25 standards, which are to be used on interstate and primary bridges and include stainless steel reinforcement between the barrier rail and bridge slab/wing, include approach slabs [OD SRP BR-205] which are tied to the integral abutment approach notches using #8 stainless steel reinforcing bars.

All barrier rail to bridge slab/wing reinforcement and abutment paving notch bars for tied approaches for interstate and primary bridges shall be stainless steel. All other reinforcement in CCS superstructures on the primary highway system shall be epoxy coated except spirals, including the following:

- All slab reinforcing steel, longitudinal and transverse, top and bottom.
- All abutment reinforcing steel.
- All reinforcing steel in pier caps including cap steel from P10L piles.
- All barrier rail and median barrier reinforcing steel, longitudinal and vertical, except as noted above.
- All light pole base reinforcing steel.
- All wing reinforcing steel.

The designer shall provide a permissible longitudinal construction joint at the centerline of the bridge whenever the bridge width exceeds 32 feet or whenever staged construction is required. Because the Bureau requires falsework to remain in place across the entire bridge width until both sides of the slab are complete there is no need for a closure pour at the joint. Longitudinal reinforcement may be shifted 1 inch to miss the joint. Transverse reinforcement should be spliced near the joint.

CCS bridges shall have permissible transverse construction joints near the dead load inflection points. The joints are to be configured as specified in Table 5.6.1.4.2.

Table 5.6.1.4.2. Transverse reinforcement and construction joints for CCS superstructure

Skew	Direction of Transverse Reinforcement	Configuration of Transverse Joints	Keyway, nominal size (1)
15 degrees or less	Parallel with skew	Parallel with skew but perpendicular to longitudinal centerline below barrier rails	Beveled 2 x 6
More than 15 degrees to 30 degrees	Perpendicular to longitudinal centerline	Parallel with skew but perpendicular to longitudinal centerline below barrier rails	Beveled 2 x 6
More than 30 degrees	Perpendicular to longitudinal centerline	Stepped; parallel with skew alternate, Figure 5.6.1.4.2	Beveled 2 x 6 along entire joint

Table note:

(1) See CADD Note E443/M443 [BDM 13.5.2].

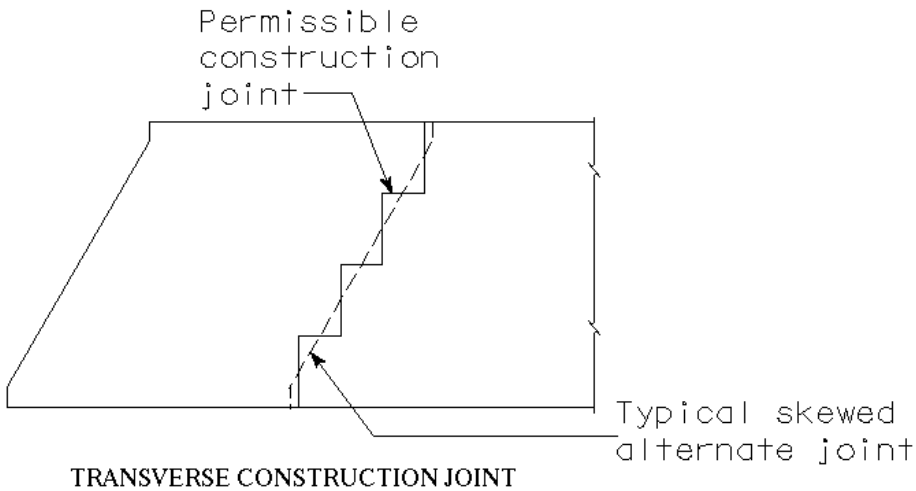

Figure note:

- See also the J44-series, sheet J44-~~22-06~~24-25 for parallel joints and sheet J44-~~24-06~~24-25 for stepped joints.

Figure 5.6.1.4.2. Stepped transverse construction joint

Because the Bureau requires that falsework remain in place until the entire slab superstructure is placed and cured there usually is no need to require a slab placement sequence. If unusual circumstances require a sequence, the designer shall indicate the sequence on the plans.

The designer shall provide deck drains appropriate for the slab slope, railing type, bridge substructure, and site. For J40 and J44 standard bridges with barrier rail the standard plans [BSB J40-25, and J44-~~14~~25] give recommended deck drain details and locations. These locations may need to be adjusted for project conditions. See the commentary for decks for additional deck drain guidelines [BDM C5.2.4.1.2].

C5.6 Concrete Slab

C5.6.1.2.1 Dead

For design under the AASHTO standard specifications the office considered the edge strip to be relatively narrow, only the width of the railing plus half the depth of the slab. When 25% of the dead load of the railing directly above was applied to the edge strip, the overall distribution of the railing loads to the bridge cross section was conservative. Under LRFD, however, the edge strip is much wider, usually 6 feet, and applying only 25% of the railing load to the edge strip would be unconservative. Therefore, the portion of the railing load to be applied to the edge strip was increased to 50%. With the increase, the railing load distribution is conservative for any bridge width more than 24 feet. At 24 feet, half the railing load will be applied to 6-foot wide edge strips and half the load to the remainder of the cross section. For greater bridge widths the remainder of the cross section will be designed to carry more than half the railing load.

TABLE OF CONTENTS ~ BEARINGS

5.7 Bearings
5.7.1 General
5.7.1.1 Policy overview
5.7.1.2 Design information
5.7.1.3 Definitions
5.7.1.4 Abbreviations and notation
5.7.1.5 References
5.7.2 Load and displacement application
5.7.2.1 Dead
5.7.2.2 Live
5.7.2.3 Dynamic load allowance
5.7.2.4 Thermal
5.7.2.5 Shrinkage and creep
5.7.2.6 Earthquake
5.7.2.7 Water and Ice
5.7.3 Load application to bearings
5.7.3.1 Load modifier
5.7.3.2 Limit states
5.7.3.3 Load path
5.7.4 Bearing component analysis, design, and detailing
5.7.4.1 Plain elastomeric pads
5.7.4.1.1 Analysis and design
5.7.4.1.2 Detailing
5.7.4.2 Steel reinforced elastomeric pads
5.7.4.2.1 Analysis and design
5.7.4.2.2 Detailing
5.7.4.3 Steel bearing parts
5.7.4.3.1 Analysis and design
5.7.4.3.2 Detailing
5.7.4.4 Anchor bolts
5.7.4.4.1 Analysis and design
5.7.4.4.2 Detailing
5.7.4.5 Fixed shoes, rockers, and sliding bronze plate bearings
5.7.4.5.1 Analysis and design
5.7.4.5.2 Detailing
5.7.4.6 Disc and pot bearings
5.7.4.6.1 Analysis and design
5.7.4.6.2 Detailing
5.7.5 Bearing adjustment and replacement

5.7 Bearings

5.7.1 General

Bearings transmit forces from the bridge superstructure to abutments and piers. Therefore, the designer should consult the pretensioned prestressed concrete beam (PPCB) and continuous welded plate girder (CWPG) articles [BDM 5.4 and 5.5] and the abutment and pier articles in this manual [BDM 6.5 and 6.6] for additional information that may affect the design of bearings.

5.7.1.1 Policy overview

[AASHTO-LRFD 14.6.2, 14.8.1]

The Bridges and Structures Bureau follows a general design policy of jointless bridges with integral abutments for short and intermediate spans, within length and skew limits established based on research at Iowa State University [BDM Table 6.5.1.1.1]. The jointless policy applies to all typical bridge superstructure types in use by the Bureau—continuous concrete slab (CCS), pretensioned prestressed concrete beam (PPCB), continuous welded plate girder (CWPG), and rolled steel beam (RSB).

For many beam or girder bridges, integral connections between the superstructure and abutments are standard full-depth concrete diaphragms cast after the beams or girders have been seated on small steel S-shapes or bars [BSB SS 4500-BTB – 4513-BTE]. In some cases for PPCB superstructures, the connections between the beams and piers are fixed, with full-depth concrete diaphragms cast after the beams have been seated on plain elastomeric pads. The full-depth diaphragms at abutments and piers require only the S-shapes, bars, or plain elastomeric pads during construction and, in usual conditions, these construction aids require no structural design.

Where bearings are required, the bearing designer needs to consider function, construction, inspection, maintenance, and replacement. Bearings shall be designed and detailed carefully to avoid maintenance problems. The designer should protect bearings from deck runoff. There should be room for inspection of bearings and space for jacking of the superstructure for bearing installations requiring temperature adjustment and in case bearings need to be replaced [AASHTO-LRFD 14.8.1].

Where fixed bearings are required for PPCB, CWPG, and RSB bridges, the Bureau prefers low profile, curved sole plate bearings of the type detailed on standard sheets [BSB SS 1010, 4541C-4541E]. Fixed bearings shall be designed to transfer longitudinal and transverse forces through anchor bolts, pintles, welds, steel plates, and other positive connections.

If the designer determines a need for expansion bearings, the Bureau prefers steel reinforced elastomeric bearing pads as detailed on standard sheets [BSB SS 1010, 4541C-4541E]. The pads may be used with or without curved sole plates for pretensioned prestressed concrete beams, but for continuous welded plate girders curved sole plates are required. Although the expansion bearing details with curved sole plates theoretically can accommodate all transverse rotations, the elastomeric bearing pads should be designed for a minimum transverse rotation to allow for uncertainties. At each abutment or pier all steel reinforced elastomeric bearings shall have the same stiffness.

Bearing options for typical beam or girder bridges are summarized in Table 5.7.1.1-1.

Table 5.7.1.1-1. Bearing types for typical PPCB, CWPG, and RSB bridges

Support Type	Bridge Type	Bearing Description	Standard Sheets
Integral abutment (expansion/ fixed)	PPCB	3x3 bar seat for BTB-BTE beams, with full-depth concrete diaphragm (4)	4380-BTB-4 – 4385-BTE-6, 4500-4513
	CWPG, RSB	S 3x7.5 seat, with full-depth concrete diaphragm	
Fixed pier	PPCB	Plain elastomeric pad seat, with full-depth concrete diaphragm (1), (2)	44542-BTCDE – 4548-BTCDE
	PPCB	Low profile fixed bearing (1), (2)	4541F-4541H
	CWPG, RSB	Low profile fixed bearing (1)	1010
Stub abutment (expansion)	PPCB	Steel reinforced elastomeric bearing pad or steel reinforced elastomeric bearing pad with curved sole plate and pintle plate (3)	4541C-4541E
	CWPG	Steel reinforced elastomeric bearing pad with curved sole plate and pintle plate (3)	
Expansion pier	PPCB	Steel reinforced elastomeric bearing pad or steel reinforced elastomeric bearing pad with curved sole plate and pintle plate (3)	4541F-4541H
	CWPG, RSB	Steel reinforced elastomeric bearing pad with curved sole plate and pintle plate (3)	1010

Table notes:

(1) Use fixed shoe bearings shown on BSB SS 1008b and 1009b only as needed to match existing bearings for bridge widening or rehabilitation projects.

(2) For PPCB bridges with slopes not more than 5.5% (0.055 radians) use the plain elastomeric pad seat, with a taper if necessary. See the plain elastomeric pad article [BDM 5.7.4]. For slopes greater than 5.5% (0.055 radians) the designer shall use a low profile fixed bearing [BSB SS 4541C-4541E].

(3) Use rocker or bronze plate sliding bearings shown on standard sheets [BSB SS 1008a, 1008b, and 1009a and 4541-4541B] only as needed to match existing bearings for bridge widening or rehabilitation projects. Use bronze plate sliding bearings if load or expansion conditions exceed the permissible values for steel reinforced elastomeric bearing pads [BDM Table 5.7.1.1-2]. Check movement capacity of standard rocker or bronze plate bearings for the specific application.

(4) Refer to IM 570 Appendix I for alternate integral abutment PPCB bearing options. These options were introduced to alleviate fabricator difficulty in obtaining the solid steel bars. The Estimate Reference Information for PPCBs will note the alternates.

For CCS bridges, connections between the slab and abutments are integral, without bearings, as detailed on the standard J-series plans. The connections between slab and pier caps are monolithic or non-monolithic, without bearings.

To guide the designer in choosing the type of expansion bearing for long span and other non-typical bridges, the Bureau has established the load and translation limits in Table 5.7.1.1-2.

Table 5.7.1.1-2. Service load and translation limits for expansion bearings

Bearing Type	Maximum Service Load, kips	Maximum Service Translation (one direction), inches	Comments
Steel reinforced elastomeric	450	2½	Loads near the maximum are feasible at small translations. Large translations at small loads require anchorage of bearings.
Self-lubricating bronze plate (1), (3)	300	1½	Larger loads and translations are feasible if bearings on standard sheets [BSB SS 4541-4541B] are redesigned.
Rocker (2) (3)	650	4½	Standard Sheets 1008a, 1008b, and 1009a also give smaller rockers with more limited capacities.
Disc or pot (4)	2500	5	Maximum limits are approximate and depend on manufacturer.

Table notes:

(1) The maximum load and translation are for the BTB-BTE bearing on the standard sheet [BSB SS 4541B]. Other bearings shown on the standard sheets have lower maximum service loads.

(2) The maximum load and translation are for R5, the largest rocker on the standard sheets [BSB SS 1009a].

(3) Use rocker or bronze plate sliding bearings only as needed to match existing bearings for bridge widening or rehabilitation projects. Use bronze plate sliding bearings if steel reinforced elastomeric bearing pads cannot be designed for the bridge load and expansion conditions.

(4) Of the two options, the Bureau prefers disc bearings.

Bearings for bridges with unusual design requirements shall be selected on the basis of feasibility [AASHTO-LRFD 14.6.2] and economics, subject to approval of the supervising Unit Leader.

For typical bearings and bearing parts the Bureau permits design at the Service I limit state which, in a few cases, overrides requirements for strength limit state design in the AASHTO LRFD Specifications. However, specially manufactured bearings such as pot or disc bearings shall be designed according to all of the appropriate limit states in the AASHTO LRFD Specifications. Questions regarding design standards should be referred to the Chief Structural Engineer.

Except for bridge sites classified as Site Class F and Mississippi and Missouri River bridge sites the entire State of Iowa can be classified in AASHTO Seismic Zone 1 [BDM C6.6.2.10], and therefore the only usual design requirements for earthquake that affect bearings are minimum horizontal forces for connections and minimum bearing seat widths below deck expansion joints at discontinuities in the superstructure. For typical bridges with integral abutments, a continuous deck without expansion joints, and standard fixed pier and expansion pier bearings, connections and bearing seat widths need not be checked. However, bridges with any of the following features do need to be checked:

- Deck expansion joints,
- Horizontally curved beams or girders,
- Bronze plate bearings,
- Fixed shoe or rocker bearings,
- Pot, disc, or other high-load bearings,
- Stub abutments,
- Multiple simple spans, or
- Spans greater than 500 feet.

5.7.1.2 Design information

Reserved

5.7.1.3 Definitions

[AASHTO-LRFD 3.3.2]

Longitudinal is the direction associated with the axis of the girder or bridge member supported by the bearing. Usually the longitudinal direction will parallel the roadway centerline of construction. See Figure 5.7.1.3.

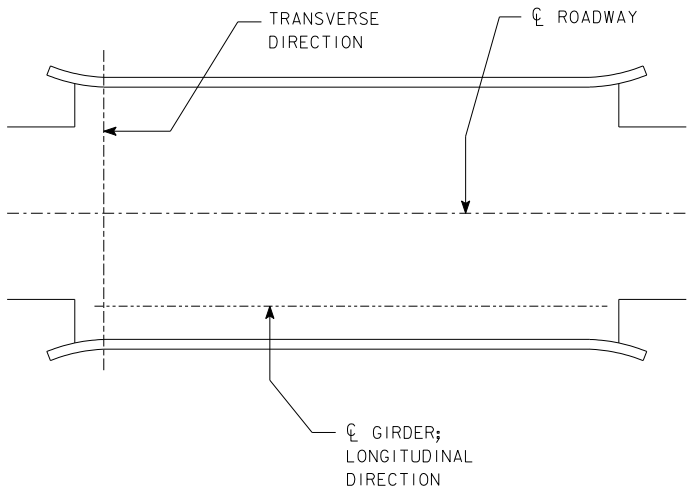

Figure 5.7.1.3. Longitudinal and transverse directions

Transverse is the direction normal to the axis of the girder or bridge member supported by the bearing. See Figure 5.7.1.3.

5.7.1.4 Abbreviations and notation

[AASHTO-LRFD 3.3.2, C3.4.1, 3.10.4.2, 14.7.6.4, C14.8.3.1]

A_s, peak seismic ground acceleration coefficient modified by short-period site factor [AASHTO-LRFD 3.10.4.2]
CCS, continuous concrete slab
CWPG, continuous welded plate girder
DC1, non-composite dead load of structural components and nonstructural attachments such as beams, girders, deck, haunches, diaphragms, and cross frames [AASHTO-LRFD 3.3.2].
DC2, composite dead load of structural components and nonstructural attachments such as barrier rails, sidewalks, curbs, and medians that are not part of the initial deck pour [AASHTO-LRFD 3.3.2].
DW, dead load of wearing surfaces and utilities [AASHTO-LRFD 3.3.2].
FR_E, friction force for a steel reinforced elastomeric bearing
LL, live load
LRFD, load and resistance factor design
PPCB, pretensioned prestressed concrete beam
RSB, rolled steel beam
S_{D1}, horizontal response spectral acceleration coefficient at 1.0-sec. period modified by long-period site factor [AASHTO-LRFD 3.10.4.2]
γ_{EQ}, load factor for live load applied simultaneously with seismic loads [AASHTO-LRFD C3.4.1]
μ, coefficient of friction for a steel reinforced elastomeric bearing on concrete, which may be taken as 0.2 [AASHTO-LRFD 14.7.6.4, C14.8.3.1]

5.7.1.5 References

American Concrete Institute (ACI). *Building Code Requirements for Structural Concrete (ACI 318-11) and Commentary (ACI 318R-05).* Farmington Hills: ACI, 2011. (Appendix D contains the latest information for design of anchor bolts in concrete.)

American Institute of Steel Construction (AISC). *Steel Construction Manual, Thirteenth Edition.* Chicago: AISC, 2005.

Girton, D.D., T.R. Hawkinson, and L.F. Greimann. *Validation of Design Recommendations for Integral Abutment Piles, HR-292.* Ames: Iowa Department of Transportation and College of Engineering, Iowa State University, 1989.

Hartle, R.A., K.E. Wilson, W.A. Amrhein, S.D. Zang, J.W. Bouscher, and L.E. Volle. *LRFD Design Example for Steel Girder Bridge with Commentary.* Arlington: National Highway Institute, Federal Highway Administration, 2003.

Precast/Prestressed Concrete Institute (PCI). *PCI Design Handbook, Seventh Edition.* Chicago: PCI, 2010.

5.7.2 Load and displacement application

A bridge bearing transmits forces and displacements from superstructure to substructure with respect to three directions: vertical, longitudinal, and transverse as shown in Figure 5.7.2. Although most loads and displacements for bearings are determined from the superstructure using common structural principles, the Bureau has some policies that simplify computations and produce conservative designs for typical bridges. For long span and other non-typical bridges the designer shall consult the AASHTO LRFD Specifications.

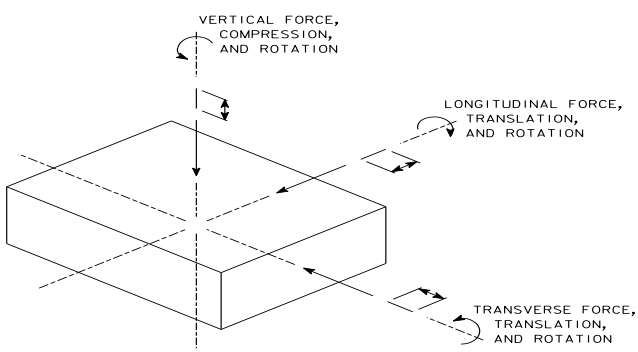

Figure 5.7.2. Bearing design loads and movements

5.7.2.1 Dead

[AASHTO-LRFD 3.3.2, 4.6.2.2]

Dead load forces PPCB, CWPG, and RSB bridges shall be distributed to bearings according to AASHTO LRFD Specifications [AASHTO-LRFD 4.6.2.2] and the following Bureau policy:

- Distribute DC1 forces assuming the deck to be simply supported between beams or girders and the deck overhang to be fully supported by the exterior beam or girder.
- For DC1 recognize continuity in CWPG [BDM 5.5.1.4.1.1] and RSB bridges.

- For bridges with roadways no more than 44 feet wide, distribute the DC2 barrier rail load equally to all beams or girders. For bridges with roadways greater than 44 feet wide, distribute each barrier rail one-half to the exterior beam or girder, one-quarter to the first interior beam or girder, and one-quarter to the second interior beam or girder.
- Distribute the DW, 0.020 ksf future wearing surface equally to all beams or girders.
- Consider utility lines part of DW in accordance with the AASHTO LRFD Specifications [AASHTO-LRFD 3.3.2].
- Determine DC2 and DW forces considering continuity [BDM 5.4.1.4.1.1, 5.5.2.4.1.1]. Recognize the lack of continuity at expansion joints.

5.7.2.2 Live

[AASHTO-LRFD 3.6.1.2, 3.6.1.3, 3.6.1.6, 4.6.2.2]

Unless special requirements govern the design, vehicular live load (LL) shall be HL-93 [AASHTO-LRFD 3.6.1.2]. It shall be applied as discussed in the AASHTO LRFD Specifications [AASHTO-LRFD 3.6.1.3]. If applicable, sidewalk loads [AASHTO-LRFD 3.6.1.6] shall be applied simultaneously with the vehicular live load.

Live load forces shall be distributed according to AASHTO LRFD Specifications [AASHTO-LRFD 4.6.2.2] and the following Bureau policy:

- Determine live load (and dynamic load allowance, if applicable) forces considering continuity of PPCB bridges after curing of the deck.
- Distribute live loads as for beam or girder shear.

5.7.2.3 Dynamic load allowance

[AASHTO-LRFD 3.6.2.1, Section 14]

Bureau practice is to exclude the dynamic load allowance (IM) from design of plain and steel reinforced elastomeric bearing pads but to include the dynamic load allowance in design of all steel bearing parts, even those parts transmitting loads from elastomeric bearings to substructure components. For special bearing types the designer shall consult the bearings section in the AASHTO LRFD Specifications to determine the applicability of the dynamic load allowance [AASHTO-LRFD Section 14].

Where applicable, the dynamic load allowance shall be determined according to the AASHTO LRFD Specifications [AASHTO-LRFD 3.6.2.1].

5.7.2.4 Thermal

[AASHTO-LRFD 3.4.1, 3.12.2.1]

At expansion joints and expansion piers, where the superstructure is designed to move with respect to the substructure, the bridge designer shall determine the ranges and directions of translations caused by temperature change. For most superstructures the primary cause of translation is temperature change in superstructure members. As shown in Table 5.7.2.4 Bureau policy is to design for one-half of the full range of cold climate temperature extremes increased by a setting factor for bearings that cannot be preset, in order to allow for a range of construction temperatures from 25 to 75°F. The temperature policy differs from the AASHTO-LRFD Specifications as indicated in the table notes.

Table 5.7.2.4. Design temperature changes, setting factors, and thermal coefficient

Type of Superstructure	Design Temperature Change	Setting Factor Increase (3)	Thermal Coefficient
Steel	75°F each way from 50°F, 150°F temperature range (1)	1.33	0.0000065 /°F
Concrete	50°each way from 50°F, 100°F temperature range (2)	1.50	0.0000060 /°F

Table notes:

(1) The temperature range for steel superstructures generally is the same as for Procedure A cold climate in the AASHTO LRFD Specifications but offset upward 5°F [AASHTO-LRFD 3.12.2.1].

(2) The temperature range for concrete superstructures is greater than the Procedure A range for cold climate in the AASHTO LRFD Specifications [AASHTO-LRFD 3.12.2.1]. The combination of temperature range and thermal coefficient closely approximates field measurements for an Iowa PPCB bridge determined by Iowa State University researchers under project HR-292 [BDM 5.7.1.5].

(3) The setting factor is intended to apply to elastomeric bearings and other bearings that cannot be adjusted for temperature at time of construction. The setting factor also substitutes for and exceeds the LRFD uniform temperature load factor [AASHTO-LRFD 3.4.1]. Self-lubricating bronze bearings are typically not adjusted for temperature at time of construction and should make use of a setting factor.

5.7.2.5 Shrinkage and creep

For bearing design the Bureau neglects shrinkage and creep shortening of Iowa standard PPCB members because most of the shortening will have occurred before placing. In fast-track situations and in other prestressed concrete superstructure types the designer is cautioned to check shrinkage and creep as it affects dimensional changes of members.

5.7.2.6 Earthquake

[AASHTO-LRFD C3.4.1, 3.10.3.1, 3.10.4.2, 3.10.6, 3.10.9.2, C3.10.9.2, 4.7.4.1, 4.7.4.4]

Based on the acceleration coefficient S_{D1} [AASHTO-LRFD 3.10.4.2] for Site Class A though E [AASHTO-LRFD 3.10.3.1], all of Iowa shall be classified as Seismic Zone 1 [AASHTO-LRFD 3.10.6] for design of typical bridges [BDM C6.6.2.10]. For unusual cases where the bridge site is classified as Site Class F, and for Missouri River and Mississippi River bridge sites the designer shall determine the Seismic Zone based on the specific site characteristics.

Bridges in Seismic Zone 1 need not be analyzed for seismic forces (EQ) [AASHTO-LRFD 4.7.4.1]. However, connections that attach the superstructure to an abutment or pier so as to restrain relative movement shall be designed for horizontal connection forces. The acceleration coefficient A_S [AASHTO-LRFD 3.10.4.2] will vary below and above 0.05 in Iowa, generally below in northern Iowa and above in southern Iowa. Therefore the horizontal design connection force in restrained directions shall be taken as either 0.15 (if $A_s < 0.05$) or 0.25 (if $A_s \geq 0.05$) times the vertical reaction due to the tributary permanent load [AASHTO-LRFD 3.10.9.2]. The tributary load may vary from longitudinal to transverse directions as discussed in the AASHTO LRFD Specifications. The Bureau neglects any live load in determining the connection force, consistent with $\gamma_{EQ} = 0.0$ [AASHTO-LRFD C3.4.1].

In accordance with the 2015 AASHTO LRFD Interim Specifications the designer shall address the minimum connection forces in bearings or other restraints to ensure adequate load paths at substructure support locations, between in-span hinges, and any other connections that could result in loss of span support [AASHTO-LRFD 3.10.9.2, C3.10.9.2]. The designer need only consider the adequacy of the connection itself for these minimum connection forces.

For an abutment or a pier at a deck expansion joint the designer shall provide the minimum bridge seat width for the expansion bearings [AASHTO-LRFD 4.7.4.4].

Many typical Iowa bridge designs meet the two seismic requirements because of standard details. The following bridge types need not be checked for seismic connection forces or bearing seat widths.

- CCS, standard J-series and custom designs with similar details.
- PPCB with all of the following: integral abutments, a deck without expansion joints, and standard pier bearing details [BSB SS 4541C-4541E].
- CWPG with all of the following: integral abutments, a deck without expansion joints, and standard pier bearing details [BSB SS 1010].

5.7.2.7 Water and Ice

[AASHTO-LRFD C3.4.1, 3.7, 3.9]

Bearings shall be designed to resist loads due to design or check flood events when the superstructure is susceptible to being partially or fully inundated by water. In such cases the bearing design shall consider lateral loads due to stream forces on the superstructure. The potential for superstructure uplift due to buoyancy from air trapped between the beams is minimized by venting the superstructure [BDM 5.4.1.4.2, 5.5.2.4.2].

Ice loads generally need not be considered since they are usually applied midway between design high water and average low water elevation [BDM 6.6.2.9]. However, in cases where the TS&L specifies an ice elevation at the level of the superstructure then ice load shall be considered for the Extreme Event II load combination.

5.7.3 Load application to bearings

[AASHTO-LRFD 14.4.1]

In each direction—vertical, longitudinal, and transverse—individual force and displacement components from the superstructure shall be combined to determine maximum and minimum design values for bearings. Maximum, minimum, and uplift vertical load combinations shall be considered in bearing design. The Bureau recommends that the designer fill out a copy of the AASHTO LRFD bridge bearing schedule for each different type of bearing and include the schedules in the project computations [AASHTO-LRFD Figure C14.4.1-1].

5.7.3.1 Load modifier

[AASHTO-LRFD 1.3.2, 3.4.1]

Load factors shall be adjusted by the load modifier, which accounts for ductility, redundancy, and operational importance [AASHTO-LRFD 1.3.2, 3.4.1]. For typical PPCB, CWPG, and RSB bridges with at least three parallel beams or girders the load modifier shall be taken as 1.0.

5.7.3.2 Limit states

Except for disc and pot bearings and bearings not specifically covered in this manual, the Bureau permits bearings to be designed at the service limit state with an exception for the seismic connection force check as noted below. For steel reinforced elastomeric bearings, all design in the AASHTO-LRFD Specifications is at the service limit state except anchorage. For steel bearing parts, designing for the service limit state with the limitations stated in a subsequent article [BDM 5.7.4.3] typically will be conservative with respect to strength limit states and essentially the same as design under the service load design method in the AASHTO Standard Specifications.

The seismic connection force check in the AASHTO LRFD Specifications required in Seismic Zone 1 makes use of more than one limit state. The horizontal force, which is considered an Extreme Event I force, is determined as 0.15 or 0.25 times the permanent dead load at the service level, without load

factor adjustment. The Bureau does not include live load when determining this horizontal force. The resistance of the connection then is checked at the strength limit state.

5.7.3.3 Load path

In each direction—vertical, longitudinal, and transverse—individual force and displacement components from the superstructure shall be combined to determine maximum and minimum design values for bearings. If the minimum vertical force is an uplift the designer shall consult with the supervising Unit Leader regarding design options for the force.

Providing a complete load path from the superstructure to the substructure is particularly critical for longitudinal and transverse forces. The designer needs to check all elastomeric, steel, and concrete bearing parts from connection to the superstructure to connection to the substructure. Loads transmitted from superstructure to substructure components are covered in abutment and pier load application articles [BDM 6.5.2, 6.6.2]. For design checks not covered in this manual or the AASHTO LRFD Specifications, use design references such as *ACI 318-11* and the *PCI Design Handbook, Seventh Edition* [BDM 5.7.1.5].

For typical Iowa bridges, the most significant load and displacement design considerations are the following:

- Maximum and minimum combinations of forces along the vertical axis;
- Maximum combination of longitudinal forces;
- Maximum transverse wind force;
- Maximum and minimum combinations of rotation about the transverse axis due to profile grade, camber, dead load, live load, and uncertainties; and
- Maximum longitudinal thermal movement.

In cases where traffic turns to enter a bridge there will be transverse forces. At abutments with expansion joints and turning traffic, the designer shall estimate the transverse forces and provide lateral restraint at the bearings.

Expansion bearings need to accommodate longitudinal temperature and other translations with minimal longitudinal force. Although the primary translations usually are longitudinal, there also may be significant transverse translations in horizontally curved, skewed, or wide bridges.

For long-span bridges, curved bridges, highly skewed bridges, wide bridges, or other unusual bridges the designer needs to consider forces and movements carefully, both during the construction period and the service life of the bridge. During design, plan sketches of the bridge framing with longitudinal and transverse design values may be needed as a guide for proper design of the bearings.

5.7.4 Bearing component analysis, design, and detailing

5.7.4.1 Plain elastomeric pads

5.7.4.1.1 Analysis and design

[AASHTO-LRFD 14.7.5.2, 14.7.6.3.2]

During construction of fixed piers with full-depth cast-in-place concrete diaphragms, Bureau practice is to seat pretensioned prestressed concrete beams on 70 durometer plain, one-inch thick untapered or tapered elastomeric pads for slopes less than 5.5% (0.055 radians) [BSB SS 4500-BTB – 4513-BTE, 4542-BTCDE – 4548-BTCDE]. An untapered pad will accommodate slopes up to about 1.4% (0.014 radians). The slope is determined from the difference in bearing elevations without consideration of beam camber. Tapered pads for sloping pretensioned prestressed concrete beams shall have a centerline thickness of 1 inch and edge thicknesses specified to the nearest 1/16 inch. At the maximum allowable 5.5% (0.055 radians) slope a 9-inch tapered pad will range in thickness from ¾ inch to 1 ¼ inch.

The 70 durometer elastomer for plain elastomeric pads shall be virgin neoprene selected for temperature Zone C [AASHTO-LRFD 14.7.5.2] that meets Iowa DOT material and testing requirements [IDOT SS 4195.02].

Although plain elastomeric pads may not meet compressive stress limits for total vertical loads under the service limit state [AASHTO-LRFD 14.7.6.3.2], the pads have performed well in Iowa bridges under construction conditions detailed on Bureau standard sheets [BSB SS 4500-BTB – 4513-BTE, 4542-BTCDE – 4548-BTCDE]. Under service conditions the pads are supplemented with resilient joint filler below the concrete diaphragms, and thus the pads are unlikely to be subjected to full service load stress.

5.7.4.1.2 Detailing

See standard sheets for typical details [BSB SS 4500-4513, 4542-4548].

5.7.4.2 Steel reinforced elastomeric pads

5.7.4.2.1 Analysis and design

[AASHTO-LRFD 14.4.1, 14.4.2.1, 14.7.5.2, 14.6.2, 14.7.6, C14.8.3.1]

Where expansion bearings are required for new bridges, the Bureau prefers steel reinforced elastomeric bearing pads as detailed on standard sheets [BSB SS 1010, 4541C-4541E]. Steel reinforced elastomeric bearing pads shall be limited to service loads of 450 kips or less and service shear deformations of +/- 2 1/2 inches or less, unless an exception is approved by the supervising Unit Leader.

For long span bridges and other special conditions beyond the load and movement capacity of steel reinforced elastomeric bearings, the Bureau recommends the following.

(1) Make preliminary selections of bearing types from AASHTO LRFD Specifications [AASHTO-LRFD 14.6.2], considering former bronze plate bearings as additional options. The Bureau is no longer considering rocker bearings on new or replacement bridges.
(2) Check economic feasibility of the options.
(3) Seek approval of the supervising Unit Leader before proceeding with final design.

The Bureau recommends that the designer use the schedule given in the AASHTO LRFD Specifications [AASHTO-LRFD Figure C14.4.1-1] to summarize design values and requirements for each bearing design and include the summary sheets in the computations for the bridge.

For steel reinforced elastomeric bearing pads, the elastomer shall be virgin neoprene selected for temperature Zone C [AASHTO-LRFD 14.7.5.2] that also meets Iowa DOT material and testing requirements [IDOT SS 4195.02]. Nominal hardness should be specified as 50 durometer on the Shore A scale. In cases where 50 durometer elastomer does not meet design criteria, the designer may use 60 durometer elastomer. However, all elastomeric bearing pads for a single abutment or pier shall have the same hardness. The Bureau prefers that the elastomer be formulated with minimal or no paraffin additives that may reduce friction on the surface of bearing pads.

For the specified nominal hardness, the shear modulus for each design condition shall be taken as the least favorable value from the AASHTO LRFD Specifications table [AASHTO-LRFD Table 14.7.6.2-1].

Internal laminates shall be ASTM A1011/A1011M, Grade 36 steel sheet. Preferred thickness is 0.125 inch.

Steel reinforced elastomeric bearings shall be designed according to AASHTO Method A [AASHTO-LRFD 14.7.6], specifically the following:

- Compressive stress [AASHTO-LRFD 14.7.6.3.2],
- Compressive deflection [AASHTO LRFD 14.7.6.3.3],

- Shear [AASHTO-LRFD 14.7.6.3.4],
- Stability [AASHTO-LRFD 14.7.6.3.6], and
- Reinforcement [AASHTO_LRFD 14.7.6.3.7].

At expansion bearings, rotations result from multiple sources including profile grade, camber, creep and shrinkage, construction tolerance, and loading. The applicable rotations for profile grade, camber, creep, and shrinkage should be determined directly from project information and the superstructure design process. The dead and live load rotations will require analysis of bridge members under several service load cases with appropriate noncomposite and composite section properties.

Steel reinforced elastomeric bearings no longer need to be designed for rotation with the method specified in previous editions of the AASHTO LRFD Specifications [AASHTO-LRFD 14.7.6.3.5]. However, the designer shall check the total rotation of the bearing in the final constructed condition. The final check shall include the rotations listed in the paragraph above and the 0.005 radians for uncertainties [AASHTO LRFD 14.4.2.1], to ensure that the total rotation does not exceed 0.02 radians, the assumption used to develop Method A. If the rotation is too large the designer should add a curved sole plate, pintles, and a pintle plate with keeper bars above the bearing or provide for the rotation by other means.

A steel reinforced elastomeric bearing supporting a pretensioned prestressed concrete beam may not have a sum of all design rotations greater than 0.02 radians. If the sum of all design rotations is greater than 0.02 radians, then the designer should consider adding a curved sole plate, pintles, and a pintle plate with keeper bars above the bearing [BSB SS 4541C-4541E]. In all cases the curved sole plate, pintles, and pintle plate with keeper bars should be used with a steel reinforced elastomeric expansion bearing supporting a continuous welded plate girder [BSB SS 1010].

Design for seismic and other extreme event conditions [AASHTO-LRFD 14.7.6.3.8] is not required for typical bearings, but the designer shall discuss unusual extreme event conditions with the supervising Unit Leader.

Bureau policy is to design steel reinforced elastomeric bearings not to slip, and therefore elastomeric expansion bearings need to be anchored either by friction or positive restraints.

Expansion bearings can be anchored by friction in many typical conditions [BSB SS 1010, 4541C-4541E], such as where a steel reinforced elastomeric bearing is placed as follows:

- Between an ordinary rough concrete bearing seat and a concrete surface or hand wire-brushed galvanized steel plate bearing surface for a pretensioned prestressed concrete beam or

- Between an ordinary rough concrete bearing seat and a galvanized steel plate-keeper bar assembly below a pretensioned prestressed concrete beam or steel girder.

If there is insufficient slip resistance through friction, the bearing shall be restrained to prevent walking.

The friction force at the Service I limit state shall be computed as follows:

$$FR_E = \mu(DC1 + DC2 + DW + [-LL])$$

Where:

FR_E = friction force resistance for a steel reinforced elastomeric bearing, k
μ = coefficient of friction, which may be taken as 0.2 [AASHTO-LRFD C14.8.3.1]
DC1 = non-composite dead load of structural components and nonstructural attachments [BDM 5.7.2.1.4]
DC2 = composite dead load of structural components and nonstructural attachments [BDM 5.7.2.1.4]

DW = dead load of wearing surfaces and utilities [BDM 5.7.1.4].
[-LL] = upward live load only; do not add downward live load. Usually upward live load is significant only at stub abutments for CWPG structures with an end span considerably shorter than the adjacent interior span. If the friction force is insufficient when upward live load is included, consult with the supervising Unit Leader.

Steel reinforced elastomeric bearings placed between two steel or galvanized steel surfaces shall be restrained at each surface with keeper bars, vulcanization, or other means, unless the supervising Unit Leader approves an exception. Expansion bearings placed between steel surfaces usually are in locations where slip or walking of the bearings could cause severe structural problems, and therefore anchorage by friction is unacceptable.

5.7.4.2.2 Detailing

Steel reinforced elastomeric bearing pads shall have a minimum side cover of 1/8 inch. Preferred layer thicknesses are ¼ inch for cover elastomeric layers, 1/8 inch for steel laminates, and 3/8 to ¾ inch for internal elastomeric layers as shown in Figure 5.7.4.2.2. Steel laminates shall be sheet material conforming to ASTM A1011/A1011M, Grade 36. Maximum thickness for bearings shall be 5 inches, unless an exception is approved by the supervising Unit Leader. Tapered elastomeric layers and holes are not permitted in steel reinforced elastomeric bearing pads.

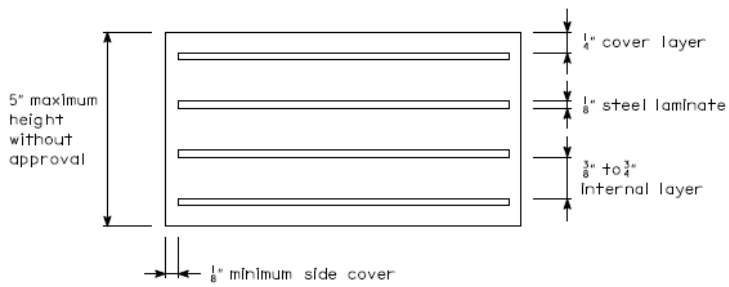

Figure 5.7.4.2.2. Steel reinforced elastomeric bearing design requirements

For restraint of a pad at a steel bearing surface see the Bureau standard sheets for typical keeper bar details [BSB SS 1010, 4541C-4541E]. A pad also may be vulcanized to a steel plate as a means of attachment.

Dimensions between pads and abutment or pier edges are covered in subsequent articles in this manual [BDM 6.5.4.2, 6.6.4.1.1].

The designer shall provide space and stiffeners or specially designed diaphragms for CWPG superstructures for jacking and replacement of steel reinforced elastomeric bearings.

Where lateral restraint of expansion bearings is required the designer may use concrete shear blocks, steel angles bolted to bearing seats, anchor rods with slotted holes, or other acceptable details to provide transverse force capacity while maintaining longitudinal expansion capacity.

5.7.4.3 Steel bearing parts

5.7.4.3.1 Analysis and design

[AASHTO-LRFD 14.4.1, 14.7.1.4]

Steel parts of typical bearings may be designed at the Service I limit state, with the seismic exception noted below, in accordance with the following Bureau guidelines.

- For most bearing parts use Grade 36 steel [BSB SS 4541-4541B, 4541C-4541E], the default grade for structural steel in the standard specifications [IDOT SS 4152.02] or Grade 50 [BSB SS

1010]. If Grade 50 or a higher grade is required for bearing parts, the grade shall be specified on the plans. Plates directly attached to weathering steel girders should match the weathering steel grade of the girders. Single one-inch thick curved sole plates for pretensioned prestressed concrete beams shall be ASTM A 852/A 852M, A 514/A 514M Grade B, or A 709/A 709M Grade HPS-70W as noted on the standard sheet [BSB SS 4541-4541B, 4541C-4541H].

- Except as necessary for clearance, use plates in bearings at least 1½ inches thick and pintles at least 1½ inches diameter.
- For flexural design of plates use an allowable bending stress $F_b = 0.55F_y$. Include the dynamic load allowance when applicable in vertical load combinations (although dynamic load allowance will be excluded for elastomeric bearing pads). Single one-inch thick curved sole plates for pretensioned prestressed concrete beams may be designed by LRFD at the Strength I limit state in order to maintain the one-inch thickness necessary for strand clearance.
- For shear design of plates use an allowable shear stress $F_v = 0.33F_y$. Include the dynamic load allowance when applicable in vertical load combinations.
- Deduct pintle holes for flexural and shear design of plates.
- Curved sole plates that bear on flat plates shall be designed for contact stress [AASHTO-LRFD 14.7.1.4]. Pintle holes need not be deducted from the line of contact stress.
- Design pintles for an allowable shear stress $F_v = 0.40F_y$ and an allowable bearing stress $0.80F_y$.
- Design masonry plates considering an allowable bending stress $F_b = 0.55F_y$, an allowable shear stress $F_v = 0.33F_y$, and an allowable concrete bearing stress $f_c = 0.30f'_c$. Masonry plate thickness should be equal to or greater than the diameter of the anchor bolts.
- When checking steel plates, pintles, welds, and anchor bolts for seismic connection forces, use factored strength limit state resistances.

The Bureau recommends that the designer use the schedule given in the AASHTO LRFD Specifications [AASHTO-LRFD Figure C14.4.1-1] to summarize design values and requirements for each bearing design and include the summary sheets in the computations for the bridge.

5.7.4.3.2 Detailing

The designer shall provide a 1/8-inch thick neoprene leveling pad between each steel masonry plate and concrete bearing seat [BDM 13.10.2, E1010A, E1010B]. The neoprene pad shall be one inch larger in each dimension than the bearing surface of the steel plate and may be of 50, 60, or 70 durometer neoprene that meets requirements of the standard specifications [IDOT SS 4195.02]. The leveling pad need not be designed for compressive stress.

Dimensions between steel bearing parts and abutment or pier edges are covered in subsequent articles in this manual [BDM 6.5.4.2, 6.6.4.1.1].

When curved sole plates are required for pretensioned prestressed concrete beams, the designer shall include specific notes on the beam sheet in the set of bridge plans to show for which beams and at which ends the plates are required.

The curved lower surface of a sole plate and the upper surface of the plate on which the sole plate bears shall be finished to ANSI 250 before galvanizing [IDOT SS 2408.03, E, 6].

Steel bearing parts not made of weathering steel or stainless steel shall be protected after fabrication and welding with galvanizing [IDOT SS 4100.07] and/or an approved paint system [IDOT SS 2508, 4182] except where a coating would interfere with the function of the bearing.

Because of its high silicon and manganese content, weathering steel should not be galvanized.

5.7.4.4 Anchor bolts

5.7.4.4.1 Analysis and design

Anchor bolts (rods) are provided to secure bearings to abutments or piers and to carry horizontal forces between the superstructure and substructure. The bolts need to be designed for shear, bearing against steel plates, and anchorage to concrete. In cases where beams or girders are subject to uplift, anchor bolts also need to be designed for tension and combined shear and tension.

Typical low profile beam and girder bearings shall be secured with at least four 1½-inch diameter anchor bolts [BSB SS 1010], and fixed shoes and rockers shall be secured with anchor bolts as detailed on standard sheets [BSB SS 1008a-1009b].

Anchor bolts shall be checked at the strength limit state.

Bureau practice is to provide galvanized swedged anchor bolts in drilled holes as detailed on the standard sheets [BSB SS 1008b, 1009a, 1009b, and 1010], as described in the standard specifications [IDOT SS 2405.03, H, 2], and as specified in the instructional memo for inspection and acceptance of anchor bolts [OM IM 453.08].

The Bureau will consider contractor requests to use anchor bolt wells in lieu of drilled-in or preset bolts. Requests approved in the past have involved bridges with:

- Beams or girders with wide bottom flanges that did not permit drilling at anchor bolt locations and
- High and varying skew combined with flared girders, which caused difficulty in avoiding the longitudinal reinforcing in the pier cap.

When the Bureau does approve anchor bolt wells, it will require that one fixed pier has drilled-in or preset anchor bolts.

Anchor bolt wells typically are of two types:

- Stay-in-place, which usually are formed with corrugated metal ducts or
- Removable, which are formed with a greased PVC sleeve.

The Bureau does not prefer the removable anchor bolt well because it requires extra care to thoroughly clean and roughen the void after removal of the greased sleeve.

A request for approval of anchor bolt wells shall include the following:

1. Stay-in-place-duct size and material specification, or removable well size and cleaning and roughening procedure.
2. Grout material specification.
3. Grouting procedure.
4. A diagram showing how the pier cap reinforcing will be shifted to accommodate the anchor bolt wells.

5.7.4.4.2 Detailing

Provide a minimum distance between center of an anchor bolt and edge of abutment or pier as required in subsequent articles in this manual [BDM 6.5.4.2, 6.6.4.1.1].

Anchor bolt locations shall be detailed with right angle dimensions from the center of the substructure unit as illustrated in Figure 5.7.4.4.2. Anchor bolt locations dimensioned in that manner will fit survey controls on the construction site and reduce chances for errors.

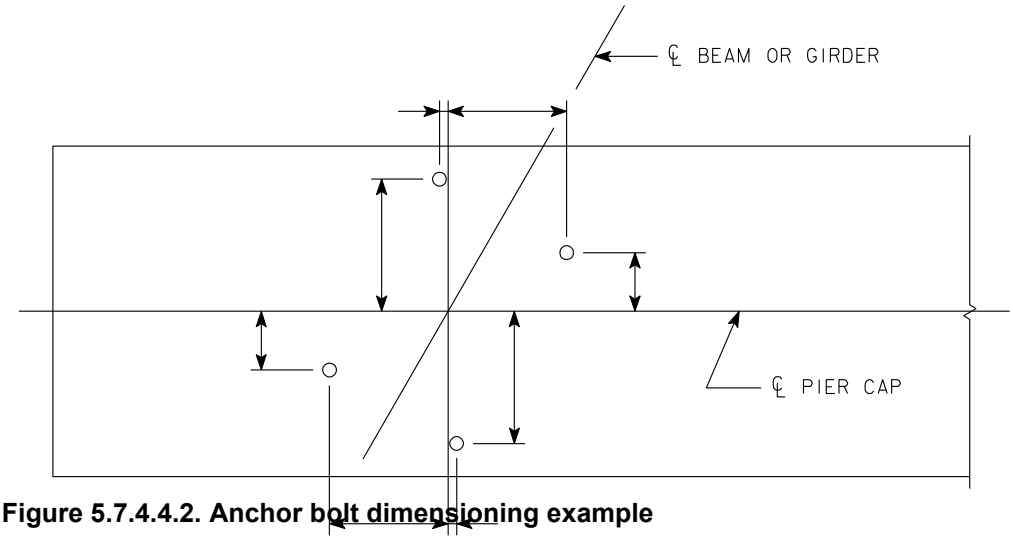

Figure 5.7.4.4.2. Anchor bolt dimensioning example

5.7.4.5 Fixed shoes, rockers, and sliding bronze plate bearings

[AASHTO-I 1996 10.32.4.2, AASHTO-LRFD 14.7.1.4, 14.7.7.2]

5.7.4.5.1 Analysis and design

Except for seismic loads, design of fixed shoes, rockers, and sliding bronze plate bearings may be at the AASHTO LRFD Service I limit state. However, in cases where bearings are intended to match those in an existing bridge, the supervising Unit Leader may approve design by the AASHTO Standard Specifications.

For widening of existing bridges the designer shall seek to use bearings that closely match those in the existing bridge. Consult standard sheets for fixed shoe, rocker, and sliding bronze plate bearings of the type specified by the Bureau in the past. Other use of fixed shoes, rockers, and sliding bronze plate bearings must be approved by the supervising Unit Leader.

Fixed shoes and rockers on the standard sheets were designed with bearing formulas in the AASHTO Standard Specifications [AASHTO-I 1996 10.32.4.2] that were altered with the 1997 interim. Those bearings [BSB SS 1008a-1009b] will not meet the present more conservative contact stresses [AASHTO-LRFD 14.7.1.4]. For the unusual situation when it is necessary to design bearings similar to the standard fixed shoes and rockers, the designer should use the AASHTO bearing formulas from 1996 and earlier.

Special sliding bronze plate bearings that have load or movement capacities beyond those on the standard sheets [BSB SS 4541-4541B] may be designed with the following compression and coefficient of friction limits.

- Maximum nominal bearing stress at the service limit state of 2.0 ksi
- Minimum coefficient of friction of 0.1 [AASHTO-LRFD 14.7.7.2]

5.7.4.5.2 Detailing

Anchor bolt locations shall be detailed with right angle dimensions from the center of the substructure unit as illustrated in the anchor bolt detailing article [BDM Figure 5.7.4.4.2]. Anchor bolt locations dimensioned in that manner will fit survey controls on the construction site and reduce chances for errors.

The designer shall provide space and stiffeners or specially designed diaphragms for CWPG superstructures for jacking and replacement of bearings and for installation temperature adjustment of rocker bearings.

5.7.4.6 Disc and pot bearings

[AASHTO-LRFD 14.7.4, 14.7.8, 14.7.9, 14.8]

5.7.4.6.1 Analysis and design

Disc and pot bearings shall be designed by the AASHTO LRFD method for both service and strength loads and movements and, as applicable, for extreme event loads and movements [AASHTO-LRFD 14.7.8, 14.7.4, 14.7.9, 14.8]. The designer shall provide the loads and movements on the plans so that the bearing manufacturer has the information needed for bearing design. (It is intended that this requirement add strength and extreme event loads and movements to the service loads and movements required for design of disc bearings in the Iowa DOT Standard Specifications [IDOT SS 2434.02, A, 1]. The designer shall add an appropriate plan note until the specifications are revised to include the additional loads and movements.)

Guided and non-guided expansion disc bearings, as designed and supplied by the manufacturer, shall have a maximum coefficient of friction of 0.03 as specified in IDOT SS 2434.02, A, 2. However, the design of other bridge components affected by the expansion bearings shall conservatively be based on a coefficient of friction ranging from 0.03 to 0.06 since the bearing lubricant is likely to dry up after 30 years.

5.7.4.6.2 Detailing

Disc and pot bearings are selected by the contractor after contract letting, and heights for appropriate bearings will vary. The designer shall make allowances for typical bearing heights when designing abutments and piers but shall not give final bearing seat elevations. Dimensions and notes on the plans shall indicate the need for the contractor to determine bearing seat elevations, as indicated in Figure 5.7.4.6.2.

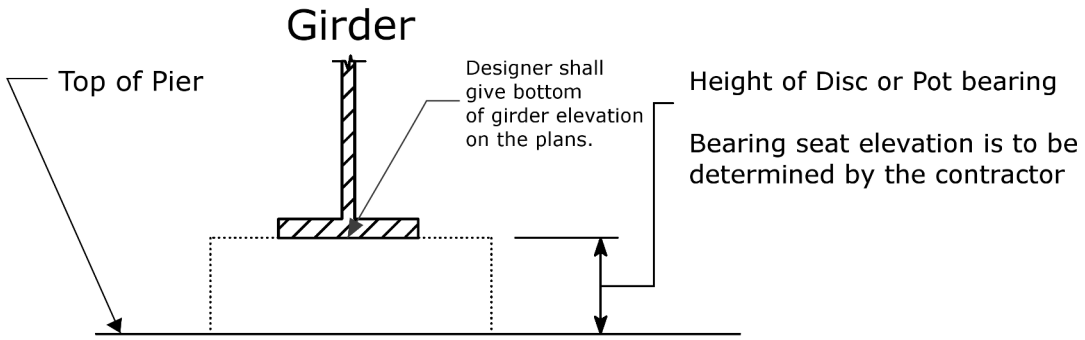

Figure 5.7.4.6.2. Disc or pot bearing elevations

The designer shall provide space and stiffeners or specially designed diaphragms for CWPG superstructures for jacking and replacement of bearings and for installation temperature adjustment.

5.7.5 Bearing adjustment and replacement

Long term provision shall be made for jacking the superstructure for bearing replacement since the service life of most bearings is less than the bridge service life. Short term provision for superstructure jacking is also required for setting bearings requiring installation adjustment for temperature (e.g. disc bearings).

The bridge shall be closed to traffic and construction equipment before jacking operations begin and shall remain closed during jacking and bearing adjustment or replacement. Designers shall provide a jacking load path and at least six inches of clearance for jack installation on new structures. Large structures may require additional clearance for larger jacks. Bridge plans shall indicate permissible jacking locations and the jacking force required to lift the superstructure at each jacking location. Structural elements resisting the loading due to the jacks shall have a capacity at least 1.5 times greater than the jacking force. The jacks shall have a safe load capacity of at least 1.3 times the required jacking force. Live load reactions need not be considered as the bridge will be closed.

The total permissible raise required to set or replace a bearing at a substructure unit shall be given in the plans. Factors affecting the raise height may include items such as anchor bolt protrusion, pintle embedment, keeper bars, and an additional ¼-inch raise to facilitate access. At a substructure unit, all the beams should ordinarily be raised at the same time using multiple jacks with no more than ¼-inch transverse differential raise between adjacent beams. The ¼-inch transverse differential raise may accumulate across the bridge, but there shall be no more than 1-inch total accumulation. The maximum longitudinal differential raise between adjacent substructure units shall be 1-inch. Longitudinal and lateral support of the superstructure shall be addressed as well as thermal movement of the superstructure.

Special notes may be required to address expansion joint devices, barrier curb cover plates, conduit or any other appurtenances that could be affected by jacking operations.

For new construction, disc and pot bearings require jacking of the superstructure to adjust the bearings for temperature. For steel beam bridges, the plan notes for bearing adjustment due to temperature shall specify that jacking is permitted prior to the deck pour, but after steel erection is complete and continuity is established. Alternatively, jacking may be performed after the deck has cured, but prior to opening the bridge to traffic. PPCB bridges may only be jacked after the deck has cured, but prior to opening the bridge to traffic.

C5.7 Bearings LRFD

C5.7.2.6 Earthquake

See C6.6.2.10 for an overview of the 2008 Interim seismic requirements and their application in Iowa.

C5.7.4.6.2 Detailing

2011 ~ Pot and Disk Bearing Detailing

Because pot and disk bearing manufacturers have proprietary height dimensions that are not known during design, the designer needs to alert the contractor to the need to determine bearing seat elevations in the field after ordering the bearings. Design drawings should not give final bearing seat elevations but should allow for the variation in bearing heights. With this memo separate articles that cover disk or pot bearings are being added to the bearings section.

TABLE OF CONTENTS ~ RAILINGS

5.8.1 Railings
5.8.1.1 General
Policy overview
Design information
Definitions
Abbreviations and notation
References
5.8.1.2 Permanent railings
Traffic railings
5.8.1.2.1.1 Single slope
5.8.1.2.1.2 Open
5.8.1.2.1.3 Retrofit
Pedestrian railings
Bicycle railings
Separation railings
Aesthetic and special railings
Concrete railings
5.8.1.3 Temporary barrier railings
5.8.1.3.1 Concrete
5.8.1.3.2 Steel

5.8.1 Railings

Previously traffic railings have been rated according to the crash test standards contained in *National Cooperative Highway Research Program (NCHRP) Report 350* (1993). Current traffic railings shall normally meet the design and testing requirements in the Manual for Assessing Safety Hardware (MASH), 2nd edition, 2016. The Department has preapproved traffic railings and other roadside safety hardware for use in accordance with documentation in OD DM 8A-5. The traffic railings discussed in this article have been preapproved for use on the state system subject to the limitations outlined in this article for each railing. Making modifications to these traffic railings is discouraged. Any modifications to these traffic railings must be approved by the Department. Using traffic railings other than those discussed in this article is discouraged. Any traffic railing for a state project or state-owned structure must be approved for use by the Department. The AASHTO LRFD provisions for railings include information based on NCHRP 350 and MASH. The Bureau has designed the deck overhang on standard sheets according to the MASH requirements in the AASHTO LRFD Specifications and BDM 5.2.

Because traffic railings are attached to the bridge deck, the designer also should consult the decks article in this manual [BDM 5.2]. The intent of the traffic railing and supporting deck design is to make the deck stronger than the railing so that a crash-related railing failure will not propagate into the superstructure [BDM 5.2.2.4]. Designers should also generally be aware of the zone of intrusion requirements as given in BDM 3.14 and OD DM 8A-6.
Bureau policies for aesthetic and special railings currently are under discussion. As needed, contact the Methods Engineer for policies to be applied to specific projects.

5.8.1.1 General

5.8.1.1.1 Policy overview

[AASHTO-LRFD 13.7.2]

Most new Iowa highway bridges are designed only for vehicular traffic and make use of the single slope barrier rails detailed on standard sheets developed by the Bureau. The 38-inch tall and 44-inch tall Iowa standard single slope barrier rails meet MASH Test Level 4 (TL-4) and Test Level 5 (TL-5) criteria, respectively. Note that the Iowa standard single slope barrier rails are 2 inches taller than the minimum heights required for TL-4 and TL-5 barrier rails to account for the possibility of a 2 inch thick future overlay. Although TL-4 is adequate for most Iowa highways, the Highway Division Management Team

adopted a more conservative policy that requires TL-5 rails for all mainline interstate bridges and for primary highway bridges with certain conditions as noted in BDM 5.8.1.2.1. The designer will need to check all primary highway bridges with respect to the policy.

All barrier rail to bridge deck/wing reinforcement for interstate and primary bridges shall be stainless steel. All other barrier rail and median barrier reinforcing steel, longitudinal and transverse, shall be epoxy coated.

For super-elevated bridges the single slope barrier rail on the high side of the bridge deck shall be placed perpendicular to the superelevation while the single slope barrier rail on the low side of the bridge deck shall be placed vertically.

General requirements for rural and urban areas regarding the size and number of conduits placed in rails are listed under the figures of each rail type in the articles below. For a fuller discussion of conduit and lighting requirements see BDM C5.8.1.1.1.

Bureau standard sheets detail two types of single slope end sections and single slope standard sections for all typical conditions. The first vertical end post section type is for high-speed highways that require connections for thrie beam guardrail beyond the bridge. The second, rounded or sloped end section type is for low-speed highways in urban areas where no guardrail connection is necessary. The maximum posted speed for use of a sloped end transition (SET) without consultation with the BSB is 30 MPH. Refer to Design Manual Section 8A-4 for guidance. In cases where the railing has a maximum expansion joint opening 4 inches or greater the designer will need to provide steel cover plates [BDM 5.8.1.2.6]. The standard single slope barrier rails are tall enough that they restrict sight distance for motorists in some vehicles, and in some highway situations an open railing may be advisable. When selecting railings the Bureau also considers splash protection during snow plowing for railways and roadways underneath a bridge.

In urban areas a bridge often will include a sidewalk or shared-use trail along one or both edges of the roadway. Standard sheets developed by the Bureau provide for a sidewalk and separation barrier along the edge of a roadway. The Iowa DOT considers that bridge sidewalks will occasionally accommodate bicyclists, especially children, and as such the railings on both sides should meet minimum bicycle height requirements [BDM 5.8.1.2.2, BDM 5.8.1.2.3]. The separation barrier is typically a combination railing constructed with a concrete lower section to which a steel railing is attached to meet minimum bicycle height requirements [BDM 5.8.1.2.4]. At the outer edge of the bridge a chain link fence or other railing is provided for protection of pedestrians.

For bridges given special aesthetic treatment, traffic railings often become topics of conversation relative to enhancement plans. However, modifications to crash-tested barriers that impact the height, traffic face geometry, or strength of the barrier system are not typically possible. Outside face treatments such as texturing of concrete using form liners is acceptable in most cases if there is no impact on barrier strength. The associated constructability, cost, and construction schedule concerns must also be adequately addressed in the planning stages of the project. For more detailed information on aesthetic barriers and potential treatments, see BDM 5.8.1.2.5.

Upgrades to existing traffic railings or barrier rails during repair projects and requirements for rail retrofits are given in the bridge repair article of this manual [BDM 12.1].

For staged construction the Design Bureau usually is responsible for layout of temporary barrier rail (TBR). The Bridges and Structures Bureau generally provides input on the placement of the TBR with respect to the deck cross-section. Information on the use of TBR is given in this railings article and in the bridge repair article [BDM 5.8.1.3, 9.1.8.3].

5.8.1.1.2 Design information

If a bridge project requires traffic railings crash tested above Test Level 4 or 5 (TL-4 or TL-5) or if attachment of guardrail is unusual, the Methods Unit in the Design Bureau will provide the designer with appropriate information. The designer should consult with the Design Bureau as needed.

5.8.1.1.3 Definitions

F-shape was the safety shape typically used by the Bureau for traffic railings under NCHRP 350 testing requirements. Although it is similar to a New Jersey shape, the F-shape reduces vehicular climbing.

Primary Highway System: "Primary roads" or "primary road system" means those roads and streets both inside and outside the boundaries of municipalities which are under department (defined as state department of transportation) jurisdiction [Iowa Code 306.3.6].

5.8.1.1.4 Abbreviations and notation

[AASHTO-LRFD 13.7.2]

CCS, continuous concrete slab
CWPG, continuous welded plate girder
FHWA, Federal Highway Administration
NCHRP, National Cooperative Highway Research Program
NHS, National Highway System
PPCB, pretensioned prestressed concrete beam
RSB, rolled steel beam **SET,** sloped end transition **TBR,** temporary barrier rail
TL-2, TL-3, TL-4, TL-5, TL-6, test levels for traffic railings [AASHTO-LRFD 13.7.2]
ZOI, zone of intrusion

5.8.1.1.5 References

American Association of State Highway and Transportation Officials (AASHTO). *A Policy on Geometric Design of Highways and Streets, Fourth Edition—The Green Book.* Washington: AASHTO, 2001.

American Association of State Highway and Transportation Officials (AASHTO). *Guide for the Development of Bicycle Facilities.* Washington: AASHTO, 1999.

American Association of State Highway and Transportation Officials (AASHTO). *Guide Specifications for Bridge Railings.* Washington: AASHTO, 1989.

American Association of State Highway and Transportation Officials (AASHTO). *Roadside Design Guide.* Washington: AASHTO, 1996.

Bligh, R.P., J.L. Briaud, A. Abu-Odeh, K.M Kim, and D.O. Saez. *Design Guidelines for Test Level 3 through Test Level 5 Roadside Barrier Systems Placed on Mechanically-Stabilized Earth Retaining Walls*. Final Report for NCHRP Project No. 22-20(2), Texas A&M Transportation Institute, College Station, Texas, June 2017.

https://nap.nationalacademies.org/download/26580

Bullard, D.L., N.M Sheihk, R.P. Bligh, R.R. Haug, J.R. Schutt, and B.J. Storey. *Aesthetic Concrete Barrier Design, NCHRP Report 554*. Washington: Transportation Research Board, 2006.

Department of Justice. *ADA Standards for Accessible Design*. 2010 (Available on the Internet at https://www.ada.gov/law-and-regs/design-standards/.)

Faller, R.K., D.L. Sicking, J. Larsen, J.R. Rohde, R.W. Bielenberg, and K.A. Polivka. *TL-5 Development of 42- and 51-in. Tall, Single-faced, F-Shape Concrete Barriers, Final Report.* Lincoln: Midwest Roadside Safety Facility, 2004.

Federal Highway Administration (FHWA). “Federal-Aid Policy Guide, Transmittal 32.” Washington: FHWA, 26 October 2004. (Available on the Internet at http://www.fhwa.dot.gov/legsregs/directives/fapg/0625sup.htm.)

Federal Highway Administration (FHWA). “NCHRP Report 350 Hardware.” (The web site is at http://safety.fhwa.dot.gov/roadway_dept/policy_guide/road_hardware/barriers/bridge railings/index.cfm.)

Horne, D.A. “Crash Testing of Bridge Railings” (a memorandum issued 30 May 1997). Washington: Federal Highway Administration, 1997. (Available on the Internet at http://safety.fhwa.dot.gov/roadway_dept/policy_guide/road_hardware/barriers/bridge railings/docs/bridge.pdf)

Iowa DOT. Iowa Bicycle and Pedestrian Long Range Plan. 2018 (Available on the Internet at https://iowadot.gov/iowainmotion/modal-plans/bicycle-pedestrian-plan.)

Keller, E.A., R.K. Faller, D.L. Sicking, J.R. Rohde, and K.A. Polivka. *Guidelines for Attachments to Bridge Rails and Median Barriers, Final Report.* Lincoln: Midwest Roadside Safety Facility, 2003. (Available on the Internet at

https://digitalcommons.unl.edu/cgi/viewcontent.cgi?article=1111&context=matcreports)

Manual for Assessing Safety Hardware (MASH), 2nd Edition, American Association of State and Highway Transportation Officials (AASHTO), Washington, D.C., 2016.

Ross, H.E., D.L. Sicking, R.A. Zimmer, and J.D. Michie. *Recommended Procedures for the Safety Performance Evaluation of Highway Features, NCHRP Report 350.* Washington: Transportation Research Board, National Research Council, 1993. (Available on the Internet at http://gulliver.trb.org/publications/nchrp/nchrp_rpt_350-a.pdf and -b.pdf)

Stolle, C., J. Rasmussen, L. Rodriguez, R. Faller, and N. Dowler. *Zone of Intrusion Envelopes*

Under MASH Impact Conditions for Rigid Barrier Attachments. NCHRP Research Report 1018. National Academy of Sciences, 2022. (Available on the Internet at https://www.trb.org/Publications/Blurbs/182863.aspx)

Taylor, H.W. "Acceptance Letter B110: Texture Guidelines for SS and Vertical Concrete Barriers." Washington: Federal Highway Administration, 2002. (Available on the Internet at http://safety.fhwa.dot.gov/roadway_dept/policy_guide/road_hardware/barriers/pdf/b110.pdf)

Wright, F.G., Jr. "Bridge Rail Analysis" (a memorandum issued 16 May 2000). Washington: Federal Highway Administration, 2000. (Available on the Internet at http://safety.fhwa.dot.gov/roadway_dept/policy_guide/road_hardware/barriers/bridge railings/docs/bridgerail_analysis_may16.pdf)

5.8.1.2 Permanent railings

5.8.1.2.1 Traffic railings

[AASHTO-LRFD 13.7.2]

Test Levels (TL) and the associated heights for railings on interstate and primary road bridges is as follows:

- The need for a TL-6 railing is not anticipated for the vast majority of bridges in Iowa.
- All new interstate mainline bridges shall require a TL-5 railing, minimum height 44 inches, 42 inches plus 2 inches for future overlay.
- Bridge railing test level and the associated height for other primary highways shall be evaluated by the Pre-Design Unit in the Design Bureau for replacement structures and the Preliminary Bridge Design Unit in the Bridges and Structures Bureau for other bridges. Basically the evaluation will follow the flow chart in Figure 5.8.1.2.1.
- TL-2 and TL-3 barrier railings may also be used in low speed applications as discussed in BDM 5.8.1.2.4.

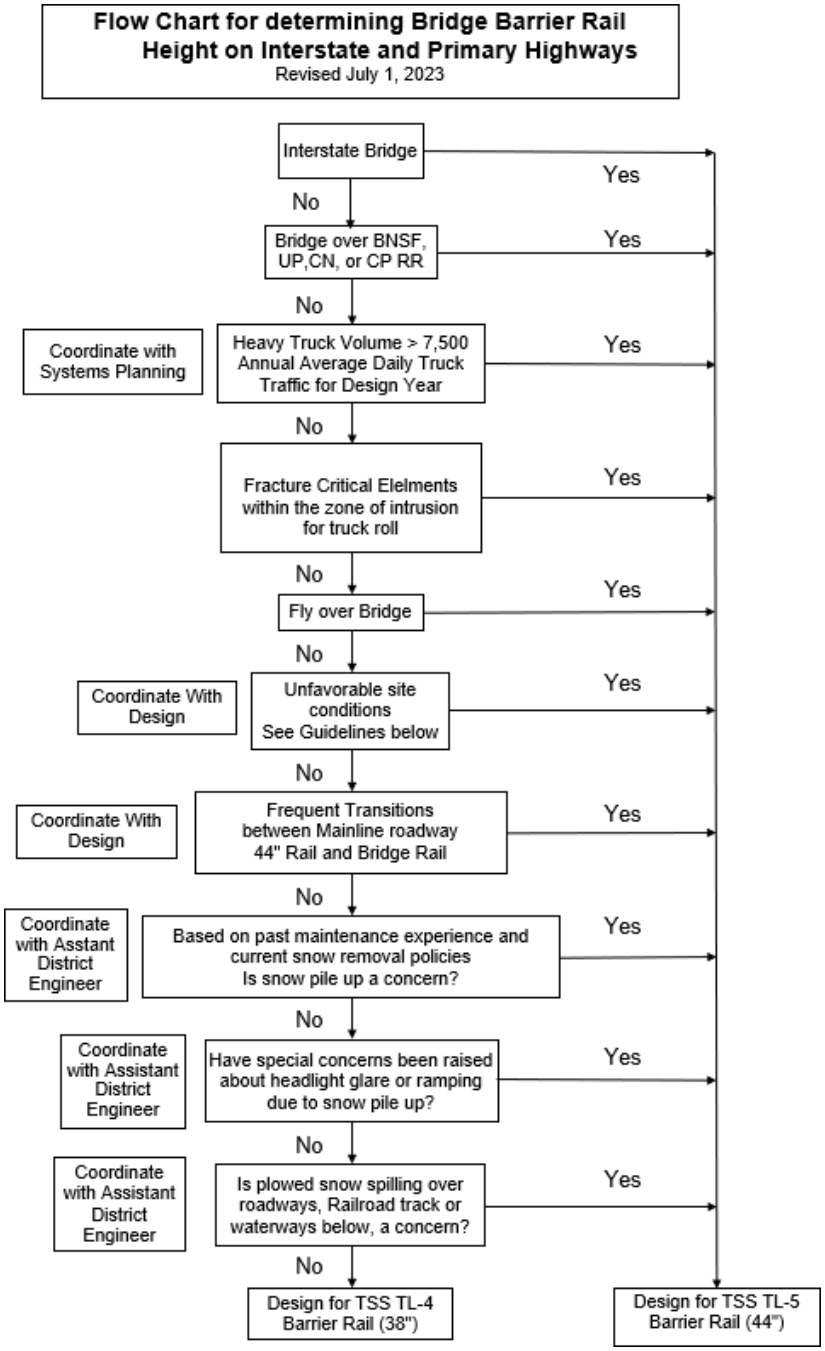

Figure 5.8.1.2.1. Flow chart for determining bridge barrier rail height on interstate and primary highways

Guidelines for unfavorable site conditions (refer to Figure 5.8.1.2.1):

- Reduced radius of curvature
- Steep down-grades on curvature
- Variable cross slopes
- Adverse weather conditions

This policy is applicable to new bridges and bridge replacements as well as to widening and repair projects that affect the existing railing. Questions regarding the policy should be directed to the Chief Structural Engineer.

5.8.1.2.1.1 Single slope

[AASHTO-LRFD 13.7.3.2]

For typical bridges that carry only vehicular traffic, the Bureau provides single slope TL-4 or TL-5 barrier rails along the edges of the roadway. The Bureau standard rail heights of 38 and 44 inches provide MASH TL-4 and TL-5 crash ratings, respectively [AASHTO-LRFD 13.7.3.2] and allow for a future 2-inch bridge deck overlay. Standard sheets give details for the typical single slope barrier rails as summarized in Table 5.8.1.2.1.1-1. In most cases the complete rail design for a set of bridge plans requires both an end section sheet and a standard section sheet.

Table 5.8.1.2.1.1-1 Standard single slope barrier rails for PPCB and CWPG bridges (1)

Test Level	Abutment Type	Skew	Additional Information	End or Standard Rail Section	Standard Sheet Number (4)
TL-4	---	---	7'-0 wing	End	1017, 1017S
TL-4	Integral	---	---	Standard	1020A, 1020SA
TL-4	Integral	---	Wing extension	Standard	1020C, 1020SC
TL-4	Integral	---	Urban approach slab with curb	End, standard	1019A, 1019SA (2)
TL-4	Stub	No skew	Wing extension	Standard	1020B, 1020SB
TL-4	Stub	Skew	Wing extension	Standard	1018, 1018A, 1018S, 1018SA
TL-4	Stub	No skew	Urban approach slab with curb	End, standard	1019B, 1019SB1, 1019SB2 (2)
TL-5 (3)	Integral	---	---	Standard	1020D, 1020SD
TL-5 (3)	Integral	---	Wing extension	Standard	1020F, 1020SF
TL-5 (3)	Stub	No skew	Wing extension	Standard	1020E, 1020SE
TL-5 (3)	Stub	Skew	Wing extension	Standard	1018C, 1018D, 1018SC1, 1018SC2, 1018SD1, 1018SD2

Table notes:

(1) Signed standard bridge plans for J40-14 CCS bridges still include details for standard F-shape barrier rails. Single slope rails will be added in the future as time permits.
(2) This standard sheet currently is under review.
(3) See Figure 5.8.1.2.1.1 for a TL-4 and TL-5 single slope cross section.
(4) A designation of "S" in the standard sheet number indicates the use of stainless steel for the barrier rail to bridge deck/wing reinforcement.

The TL-4 and TL-5 single slope barrier rails on the standard sheets are adequate for most National Highway System (NHS) and non-NHS highways in Iowa but, in rare cases where a TL-6 rating is required, the designer will need to consult the Chief Structural Engineer regarding rail selection.

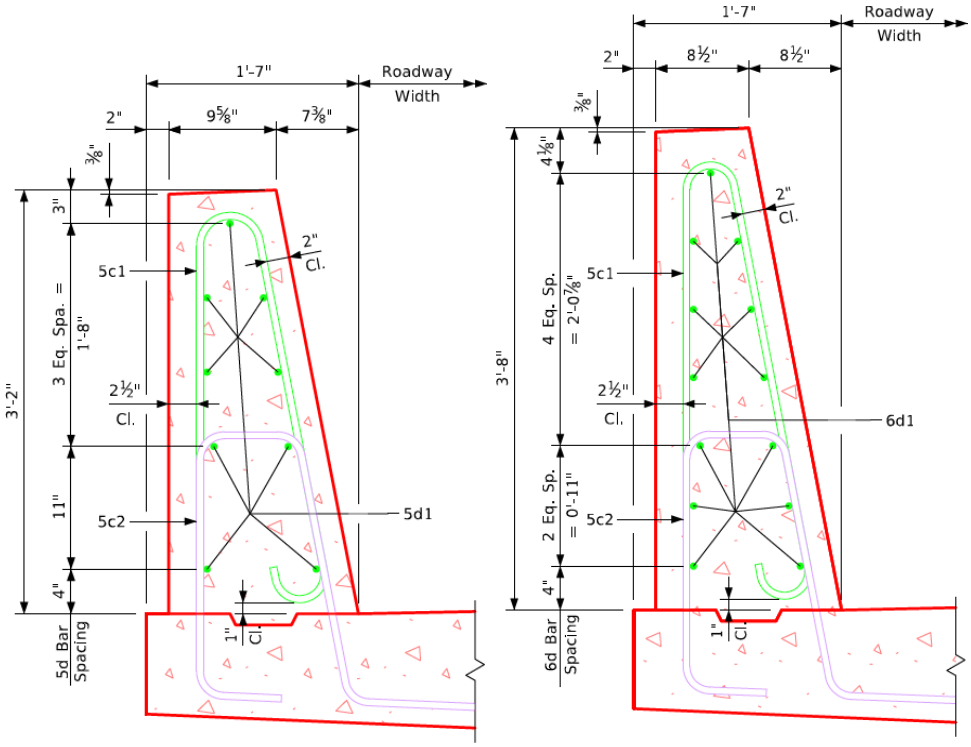

Figure notes:

- In rural interchange bridges one 2-inch conduit is placed in one of the two bridge rails; a second conduit is added if needed. No conduit is placed in other rural bridges.
- In urban bridges conduit is placed in both bridge rails.
- No more than two conduits may be placed in one rail, and the maximum conduit sizes are two 2-inch or one 2-inch and one 3-inch.

Figure 5.8.1.2.1.1. TL-4 and TL-5 single slope barrier rails, respectively

The structural capacity required for MASH compliant rails is greater than that for rails designed according to NCHRP 350. The increase in rail strength also requires a corresponding increase in the strength of the deck overhang. Two approaches were adopted with respect to the c-bar design in the rails to not only accommodate the needed strength increase, but to also limit bar congestion in the rail and deck overhang. First, the c-bar spacing was designed separately for the interior and end regions of the rail such that the c-bar spacing in those regions may be different. Interior regions of the rail may be defined as regions “for impacts within a wall segment” and end regions “for impacts at end of wall or at joint” (AASHTO-LRFD A13.3.1). An end region typically originates at a discontinuity in both the deck and rail as may occur at a deck expansion joint or at a construction joint in the rail where the longitudinal d1 rail bars do not extend through the construction joint. Second, the spacing of the upper c1 bars and lower c2 curb bars may differ from each other in each of those regions. The lower c2 bar spacing is typically greater than the upper c1 bar spacing in cases where the spacing differs. The larger c2 bar spacing helps minimize the reinforcement required in the deck overhang since AASHTO A13.4.2 requires the deck overhang to exceed MC of the parapet at its base (MC-base). As such, the deck overhang design is based on the strength of the lower c2 curb bars (BDM 5.2.2.4) which are used to determine MC-base. The average strength of the single slope rail (R_W) is based on yield line failure theory from AASHTO-LRFD A13.3.1 using the upper 5c1 bars to determine MC-average for the computation of Rw. This method of satisfying AASHTO requirements is considered valid for two reasons. First the 5c1 bars extend the full height of the rail and are hooked at the base of the front face of the rail which accommodates the transfer of tension into the 5c2 bars and subsequently into the deck. Second, Mc-base of the lower 5c2 bars was designed to

be greater than or equal to Mc-average of the upper 5c1 bars. Table 5.8.1.2.1.1-2 lists the size and spacing of the c1 and c2 bars for the standard single slope rails. Microsoft Excel applications are available on the Iowa DOT bridge website for determining the strength of the single slope rails and for deck design. See BDM 5.2.2.4 for additional information.

Table 5.8.1.2.1.1-2. c1 & c2 bar size and spacing for MASH TL-4 and TL-5 single slope rails

Bar Designation	TL-4-2 Interior Region	TL-4-2 End Region(1)	TL-5-2 Interior Region	TL-5-2 End Region(1)
Upper c1 bars	No. 5 at 12.00 inches	No. 5 at 9.00 inches for 6.75 feet	No. 5 at 6.00 inches	No. 5 at 4.00 inches for 11.00 feet
Lower c2 curb bars	No. 5 at 12.00 inches	No. 5 at 12.00 inches for 6.75 feet	No. 5 at 9.00 inches	No. 5 at 6.00 inches for 11.00 feet

Table Notes:

(1) The total minimum length needed for the c1 and c2 bar spacing at an end region is based on the critical length, Lc, from BDM Table 5.2.2.4-2. An end region typically originates at a discontinuity in both the deck and rail as may occur at a deck expansion joint or at a construction joint in the rail where the longitudinal d1 rail bars do not extend through the joint. End region lengths for rails in the standards may be longer than the minimum to allow for alignment of the 5c1 and 5c2 bar spacing for interior regions (e.g. IDOT SS 1018S-1 uses a 9-foot end region length).

The standard 9'-5" long bridge rail end sections are typically attached to the top of the abutment wings and provide a transition from the steel guardrails to the single slope rails on the bridge. The standard bridge rail end section is designed for an TL-4-2 end region condition. Prior to adopting MASH, the 7'-0" long standard bridge rail end sections used in conjunction with the F-shape rails had a vertical construction joint between the end section and the F-shape without any of the longitudinal reinforcement passing through the construction joint. With the adoption of MASH, a decision was made to pass the single slope longitudinal rail bars through the construction joint and lap with the end section longitudinal rail bars in the end section. The primary benefit of this change is to maintain continuity in the railing. This is particularly beneficial in cases where there is already a discontinuity in the railing due to an expansion joint at the bridge ends as is the case for stub abutments. A secondary benefit for integral abutments is that the design for the interior region may be extended to the rail end sections since the discontinuity at the construction joint is no longer present.

In most cases TL-4 barrier rails will provide adequate snow plowing splash protection for roadways below the bridge. If BNSF or Union Pacific Railroad tracks are below the bridge, however, Bureau policy is to provide the TL-5 barrier rail as splashboard protection. The rail height should typically remain constant along the full length of the bridge where a TL-5 barrier rail is needed for splashboard protection. The past practice of transitioning rail heights from TL-4 to TL-5 for only the region needing splashboard protection is typically uneconomical for slip-formed barrier rails unless the affected region is 15% or less of the overall bridge length.

In cases where the bridge is near an intersection, sight distance may not be adequate, especially if the barrier rail is taller than the TL-4 rail. The designer should consult with the Design Bureau if barrier rails may restrict sight distance near intersections.

In some situations it may seem desirable to mount a sign support, light pole, or other structure on top of a barrier rail. However, because a vehicle may intrude above and beyond the front face of a single slope

barrier, it is preferable to place structures behind the rail. *Guidelines for Attachments to Bridge Rails and Median Barriers* and *Zone of Intrusion Envelopes Under MASH Impact Conditions for Rigid Barrier Attachments* [BDM 5.8.1.1.5] gives recommendations for intrusion zones based on speed and traffic volume. If it is unreasonable to place structures outside the intrusion zone because of space or cost limitations the designer shall consult with the Design Bureau.
In cases where the railing has a maximum expansion joint opening 4 inches or greater the designer will need to provide steel cover plates [BDM 5.8.1.2.6].

5.8.1.2.1.2 Open

If safety considerations require use of a TL-4 open railing the Bureau recommends use of the railing detailed in Figure 5.8.1.2.1.2. The current open railing details are based on MASH requirements.

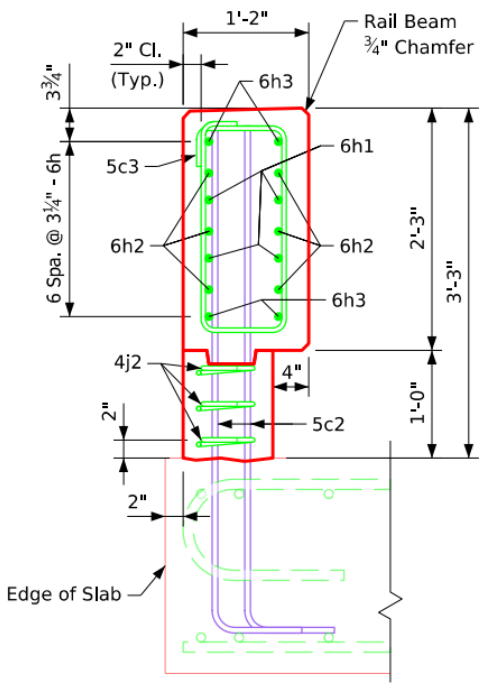

Figure note:

- No more than two conduits may be placed in one rail, and the maximum conduit sizes are two 2-inch or one 2-inch and one 3-inch.

Figure 5.8.1.2.1.2. Open railing rated TL-4 based on MASH

An open railing should be used only with permission of the Chief Structural Engineer.

5.8.1.2.1.3 Retrofit

The Bureau has had the policy of upgrading existing traffic railings or barrier rails that are not NCHRP 350 or MASH compliant to TL-4 as a part of repair, overlay, or paving projects. However, under new policy [BDM 5.8.1.2.1] for deck replacement and widening projects, TL-5 rails may be required for some conditions. The requirements for retrofit barrier rails are covered in the bridge repair article of this manual [BDM 12.1.9.2.2].

5.8.1.2.2 Pedestrian railings

[AASHTO-LRFD 13.8]

The following guidance applies to fall protection railings at the outside edge of pedestrian sidewalk only, not to the traffic separation barrier. Please refer to BDM 5.8.1.2.4 Separation railings for information related to traffic separators.

Where a sidewalk is provided on a bridge, retaining wall, or adjacent to a culvert headwall, the outer edge of the sidewalk shall be protected with a pedestrian or bicycle railing. The minimum height of the pedestrian railing shall be 42 inches above the sidewalk surface [AASHTO-LRFD 13.8.1]. Taller railings may be appropriate under certain circumstances, such as near schools or playgrounds, or on bridges over high-volume roadways. Iowa DOT standard practice is to use pedestrian railings that are also bicycle height compliant, i.e. 48 inch min. height (BDM 5.8.1.2.3), since some bicycle traffic can be expected to occur on sidewalks that are not trail width-compliant. Horizontal or vertical parts of the railing shall be spaced closely enough so that a 6-inch sphere will not pass through the lower 27-inch portion and an 8-inch sphere will not pass through the portion above the 27-inch height. Any gap at the bottom of the railing shall not allow passage of a 4-inch sphere when any portion of the sphere is within 4 inches of the walking surface (ADA Standards for

Accessible Design 405.9.2). Pass-through restrictions for fall protection apply only at railings along the outer edge of a structure. These restrictions do not apply at separation barrier railings located between the side path and the roadway.

See BDM 5.8.1.2.3 Bicycle railings for an illustrated railing example.

Many local municipalities use the International Building Code (IBC) for setting pass-through requirements for public infrastructure railings. IBC calls for containment of a 4-inch sphere in all parts of a railing. When working on projects within city limits, it is advisable to contact city officials to confirm their expectations of the pass-through requirements being used on the project.

When chain link or metal fabric fence is required, e.g. on some railroad and highway overpasses, pass-through restrictions are more stringent. Chain link or metal fabric fence shall have openings no larger than 2 inches in at least one direction. It sometimes is appropriate to consider the use of smaller chain link mesh openings to discourage climbing of the fence or pushing of objects through the mesh. Smaller mesh openings may be especially appropriate near schools or playgrounds. Chain link mesh is readily available with 1.25 inch x 1.25 inch openings, in aluminum, zinc coated, and vinyl coated products.

For projects involving replacement of existing bridges with pedestrian or bicycle accommodations, it is advisable to take into account the precedent conditions when determining the appropriate pedestrian railing height. Local perception of the level of safety of the replacement railing can be influenced by the type of railing previously used. It is advisable to coordinate the new railing's design with community expectation by making contact with city officials as appropriate.

For bridges over high-volume roadways, it has been the Iowa DOT's past practice to use fence or railing of at least 6 feet in total height, including the parapet if present. A typical minimum height of 6'-6 was used over some interstate facilities that involved new non-standard fence or railing details. Consult the Methods Engineer for appropriate fence or railing height for bridges over interstate highways, or roadways with high (>10,000 VPD) daily traffic counts or high (>45 MPH) posted speeds.

For a railroad overpass the Union Pacific Railroad typically requires an 8-foot tall curved or a 10-foot tall vertical safety fence at the outer edge of a sidewalk. Where used, curved-top fencing must not violate the recommended minimum 8-foot overhead clear envelope for the entire width of the path. This is to ensure proper clearance both for trail users and for maintenance or emergency vehicle access. While some railroads have specific written and illustrated requirements for fence configurations, oftentimes fences or railings with characteristics different from those illustrated have been granted railroad approval. It is advisable to coordinate with the railroad or with the Iowa DOT Rail Team in the Modal Transportation Bureau early in the design process to establish the precise fence or railing configuration that will be required on the project.

Design loads for pedestrian railings and fences shall be as given in the AASHTO LRFD Specifications [AASHTO-LRFD 13.8.2].

5.8.1.2.3 Bicycle railings

[AASHTO-LRFD 13.9]

The following guidance applies to fall protection railings at the outside edge of bike trail only, not to the traffic separation barrier. Please refer to BDM 5.8.1.2.4 Separation railings for information related to traffic separators.
Where a shared use trail is provided on a bridge, retaining wall, or adjacent to a culvert headwall, the outer edge of the path shall be protected with a bicycle railing. In accordance with the *Iowa Bicycle and Pedestrian Long Range Plan* which contains *Chapter 6: Complete Streets Policy*, the minimum height of the bicycle railing shall be 48 inches above the path surface [AASHTO-LRFD 13.9.2]. The 48-inch height is preferred for all cases except where local conditions favor a taller railing (AASHTO LRFD C13.9.2).

Taller railings may be appropriate under certain circumstances, such as near schools or playgrounds, or on bridges over high-volume roadways. Significantly curved bridges or steeply graded bridges may require taller bicycle railings. Horizontal or vertical parts of the railing shall be spaced closely enough so that a 6-inch sphere will not pass through the lower 27-inch portion, and an 8-inch sphere will not pass through the portion above the 27-inch height. Any gap at the bottom of the railing shall not allow passage of a 4-inch sphere when any portion of the sphere is within 4 inches of the walking surface (ADA Standards for Accessible Design 405.9.2). Pass-through restrictions for fall protection apply only at

railings along the outer edge of a structure. These restrictions do not apply at separation barrier railings located between the side path and the roadway.

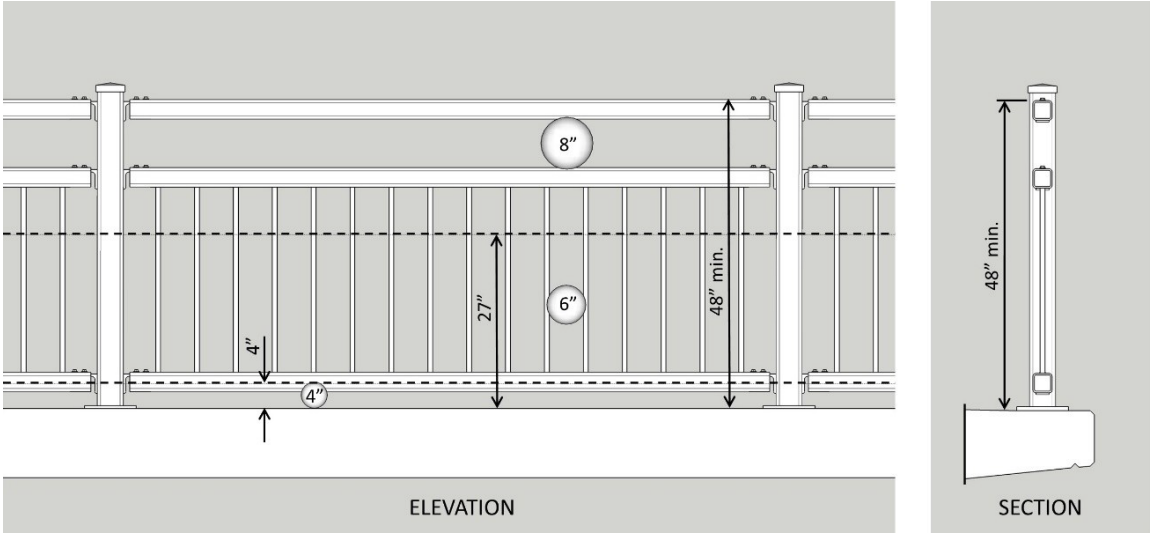

Figure 5.8.1.2.3. Example bicycle railing showing minimum height and pass-through protection requirements (see Project Nos. BRFN-065-7(39)--39-35, Design No. 120 Franklin and BRF-028-2(45)--38-77, Design No. 125 Polk for similar railing applications)

Many local municipalities use the International Building Code (IBC) for setting pass-through requirements for public infrastructure railings. IBC calls for containment of a 4-inch sphere in all parts of a railing. When working on projects within city limits, it is advisable to contact city officials to confirm their expectations of the pass-through requirements being used on the project.

When chain link or metal fabric fence is required, e.g. on some railroad and highway overpasses, pass-through restrictions are more stringent. Chain link or metal fabric fence shall have openings no larger than 2 inches in at least one direction. It sometimes is appropriate to consider the use of smaller chain link mesh openings to discourage climbing of the fence or pushing of objects through the mesh. Smaller mesh openings may be especially appropriate near schools or playgrounds. Chain link mesh is readily available with 1.25 inch x 1.25 inch openings, in aluminum, zinc coated, and vinyl coated products.

For projects involving replacement of existing bridges with pedestrian or bicycle accommodations, it is advisable to take into account the precedent conditions when determining the appropriate bicycle railing height. Local perception of the level of safety of the replacement railing can be influenced by the type of railing previously used. It is advisable to coordinate the new railing’s design with community expectation by making contact with city officials as appropriate.

For bridges over high-volume roadways, it has been the Iowa DOT’s past practice to use fence or railing of at least 6 feet in total height, including the parapet if present. A typical minimum height of 6’-6 was used over some interstate facilities that involved new non-standard fence or railing details. Consult the Methods Engineer for appropriate fence or railing height for bridges over interstate highways, or roadways with high (>10,000 VPD) daily traffic counts or high (>45 MPH) posted speeds.

For a railroad overpass the Union Pacific Railroad typically requires an 8-foot tall curved or a 10-foot tall vertical safety fence at the outer edge of a shared use path. Where used, curved-top fencing must not violate the recommended minimum 8-foot overhead clear envelope for the entire width of the path. This is to ensure proper clearance both for trail users and for maintenance or emergency vehicle access. While some railroads have specific written and illustrated requirements for fence configurations, oftentimes fences or railings with characteristics different from those illustrated have been granted railroad approval. It is advisable to coordinate with the railroad or with the Iowa DOT Rail Team in the Modal Transportation Bureau early in the design process to establish the precise fence or railing configuration that will be required on the project.

On some projects that include steep slopes or stone revetment alongside the bridge approach trail, or when a bicycle trail is accommodated adjacent to a rock-covered foreslope underneath a bridge, it may be appropriate to extend the application of the bridge's bicycle railing to protect bicyclists from these conditions. It may be necessary to consult the applicable trail authority to determine the necessity of these additional railings. The railing's implications during high water events (where applicable) and on maintenance activities should also be considered. In most cases, bicycle railings placed alongside at-grade conditions such as revetment do not require pass-through protection, so an open railing design could be used. Where bicycle railings are extended onto a bridge approach, provide smooth transitions between railings and avoid abrupt shifts in horizontal railing alignment.

In the past, there has been some debate over the use of continuous horizontal "rub rails" as a feature of bicycle railings or fences along trails. The efficacy of rub rails in preventing handlebar snagging on railings has not been determined through targeted study, nor has the appropriate height and width of such features, when used. The Iowa DOT does not include rub rails on bicycle railings due to these shortcomings of understanding and the lack of specification guidance. It is expected that the bicyclist's tendency to ride at some distance shy of continuous longitudinal obstructions is enough to reduce or prevent handlebar snagging, and that the functional clear width provided for trail surfaces provides the necessary shy distance for safe operation of bicycles.

Design loads for bicycle railings shall be as given in the AASHTO LRFD Specifications [AASHTO-LRFD 13.9.3].

5.8.1.2.4 Separation railings

[AASHTO-LRFD C13.7.1.1, 13.10]

Where a bridge provides for pedestrian and/or bicycle traffic in addition to vehicular traffic the designer shall provide appropriate separation between the different streams of traffic. Although a barrier curb may be used for traffic speeds of 45 mph or less [AASHTO-LRFD C13.7.1.1], the Bureau has the policy of providing a separation railing for all but unusual circumstances.

Separator type will usually be determined during the development of the TSL plan. If the separator type has not been determined by the start of Final Design on the project, contact the Methods Engineer for guidance.

Separation barriers shown in this section have either been successfully crash tested to MASH requirements or otherwise meet the Iowa DOT's MASH implementation policy and have been approved for use on Iowa bridge projects.

Standard drawings are not yet available for two of the three approved separator types described in this section, so it will be necessary to contact the Methods Engineer to obtain the most recent example plans. Note that each of the three separators has a different overall footprint width (10" min. to 15.5" max.).

Coordination with the BSB is essential early in the design process to properly configure the bridge cross section to accommodate the appropriate separator width. Also note that incorporation of aesthetic surface treatments may increase the width of any of the designs.

Iowa DOT standard practice is to use combination traffic and pedestrian railings that are also bicycle height compliant, i.e. 42 inch min. height on the pedestrian side (AASHTO *Guide Specifications for Bridge Railings*) and with a bicycle tube railing, since some bicycle traffic can be expected to occur on sidewalks that are not trail width-compliant. Exceptions must be reviewed and approved by the Methods Engineer.

Separation barriers shall continue at their full height for the length of the bridge deck at a minimum. It is undesirable to terminate a separation barrier within the limits of the bridge deck, as this would result in inadequate crash protection of fence, railing, or abutment features at the bridge corner outside of the sidewalk or shared use path. Sidewalk or shared use path approaches also may be adversely affected by the placement of guardrails attached to separation barriers terminating on or close to the bridge end. The designer shall consult with the Methods Unit in the Design Bureau regarding the appropriate terminus location and configuration for separation barriers to reduce or eliminate safety hazards both for vehicle occupants and for users of pedestrian facilities.

Note that it is typical for the bicycle railing attachments on separators to extend onto the approach barrier beyond the bridge at each end. The full length of these steel railings is typically detailed in the bridge plans. These railings can terminate where the sidewalk or trail alignment tapers away from the back of barrier toward its offset position along the approach. This alignment shift typically occurs at the end of the bridge wing. Also note that pass-through restrictions for fall protection do not apply at separation barriers.

Lighting elements, signs, and other rigid attachments that have not been successfully crash tested must not be mounted to the tops of separation barriers. All necessary rigid attachments must be mounted outside of the ZOI established for the barrier type. For appropriate guidance on minimum setback to lighting, signage, or other obstructions near traffic separation barriers, contact the Methods Engineer.

Drainage of a raised sidewalk or trail is usually accomplished using penetrations through the concrete portion of the separator, sloped toward the gutterline elevation. Drainage of an at-grade sidewalk or trail may involve either draining off the edge of deck or draining through the deck using trench drains that have ADA compliant cover grates. Contact the Methods Engineer for guidance. Draining the roadway through openings in the separator onto an at-grade sidewalk or trail and off the edge of deck is generally undesirable and should be avoided.

BBR (Iowa Barrier with Bicycle Railing) TL-2 Separation Barrier

Use of the IBBR separator is restricted to roadways with posted speeds of 30 MPH or less and is the preferred separator type for those conditions due to its greater transparency and potential for reducing or eliminating sight distance conflicts, especially in urban areas. The IBBR may not be used on roadways with posted speeds greater than 30 MPH because there is no guardrail or crash cushion option for termination as is required under Iowa DOT Design Manual Section 8A-4. Do not use the IBBR without its bicycle railing without review and approval by the Methods Engineer. Do not change any details of the bicycle railing, including adding horizontal or vertical railing components. As previously stated, pass-through restrictions for fall protection do not apply at separation barrier railings.

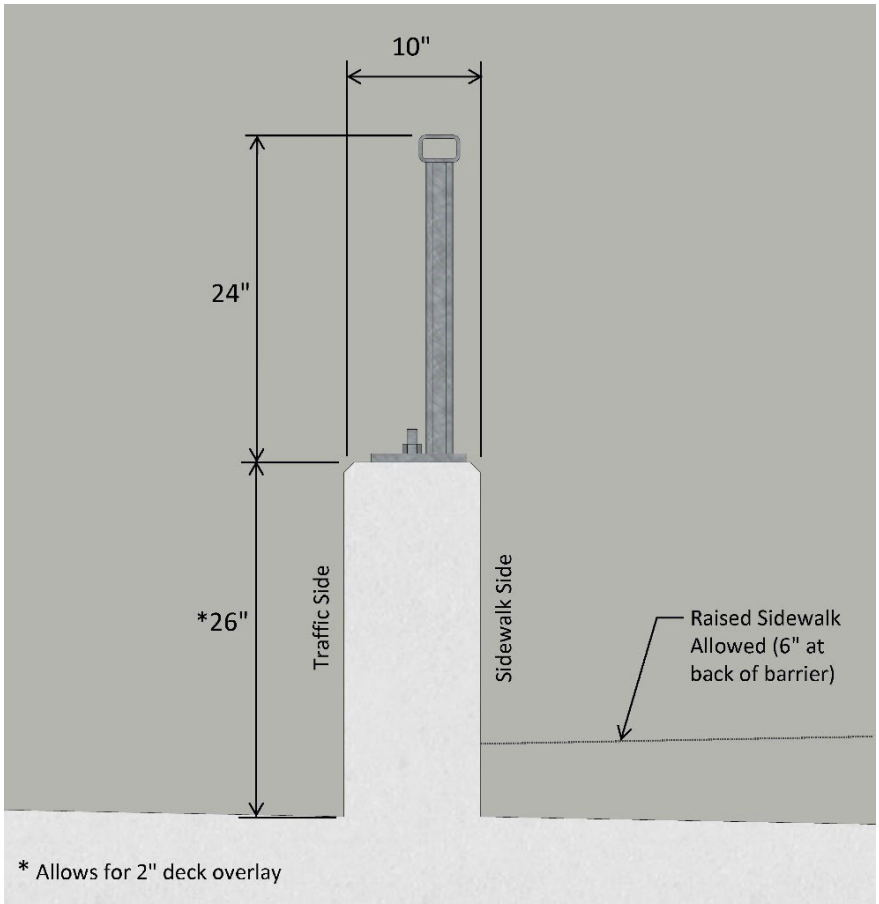

Figure 5.8.1.2.4-1. Iowa DOT "IBBR" TL-2 separation railing (see Project No. BRF-003-6(69)- -38-09, Design No. 323 Bremer for a railing application)

BMBR (Back-Mounted Bicycle Railing) TL-2 Separation Barrier

Use of the BMBR separator is restricted to roadways with posted speeds of 45 MPH or less. At posted speeds of 35 MPH and higher, a guardrail end connection or crash cushion is required under Iowa DOT Design Manual Section 8A-4 unless space restrictions prevent it. If these conditions arise, contact the Methods Engineer for guidance. The BMBR may be used in place of the IBBR for lower posted speeds if desired for aesthetic reasons or to meet local municipality expectations or preferences. Check the application for sight distance conflicts before substituting the BMBR for the IBBR,

and contact the Methods Engineer for guidance. The BMBR may be used without its bicycle railing attachment for the traffic-only side(s) of bridges or as a sidewalk separation barrier with review and approval by the Methods Engineer. The height of the bicycle railing may be adjusted by extending the support post height as necessary to achieve the minimum 42-inch height requirement to the pedestrian side. As previously stated, pass-through restrictions for fall protection do not apply at separation barrier railings. Do not add horizontal tubes to this railing.

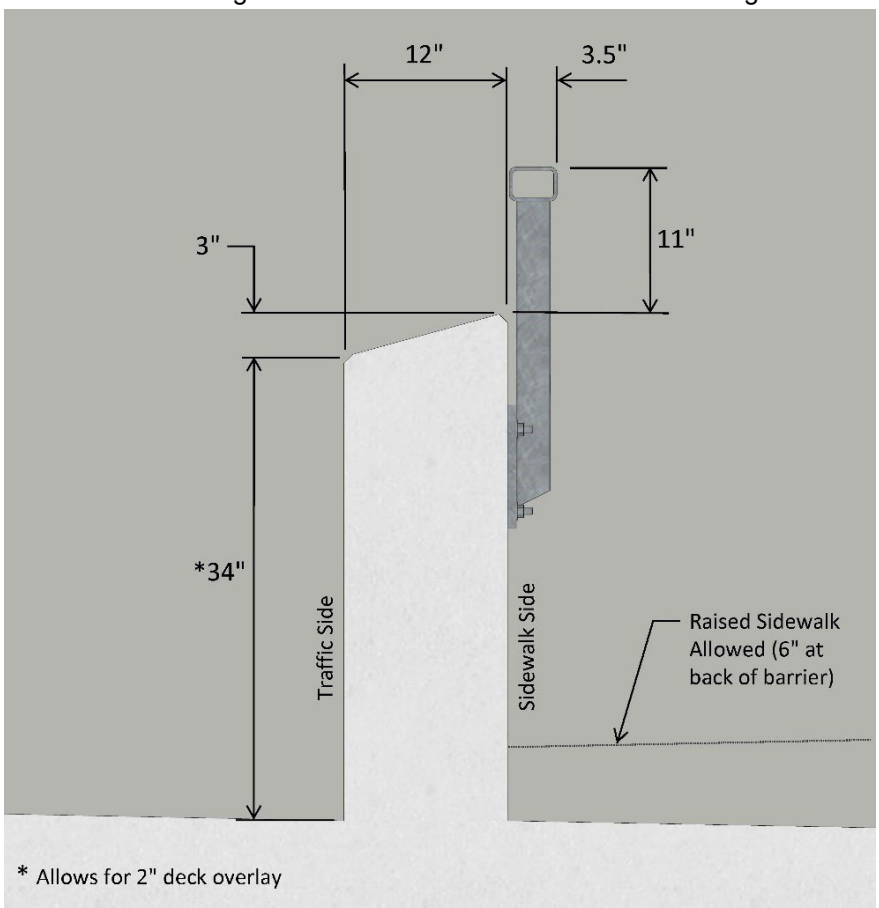

Figure 5.8.1.2.4-2. Iowa DOT "BMBR" TL-2 separation railing (see Bridge Standards 1028A, 1028SA, 1029-BHR)

Modified B-25 Series TL-3/TL-4 Separation Barrier

Use of the Modified B-25 Series separator is typically reserved for high-speed roadway bridges that include a trail or side path. Bridges carrying roadways with posted speeds greater than 45 MPH must use this design unless there are mitigating circumstances. Contact the Methods Engineer for guidance on possible alternate solutions.

Note that the Modified B-25 Series separator cannot be used with a raised trail on a bridge, since raising the bicycle railing attachment to the required 42-inch minimum height above the trail surface could place it within the barrier's vehicle intrusion zone. Consider using an at-grade trail on the bridge and warp the trail connection at the ends of the bridge to a curbed approach condition, if necessary.

The Modified B-25 Series barrier may be used in a vehicular traffic-only condition when used on both sides of a bridge that has a sidewalk or trail only along one side. Omit the back-mounted bicycle railing attachment for vehicular traffic-only applications.

The Modified B-25 Series barrier requires guardrail or crash cushion termination in accordance with Iowa DOT Design Manual Section 8A-4.

Combination steel and concrete traffic barrier systems used on Iowa projects must include requirements for embrittlement testing of any cold-rolled and galvanized steel pipes or tubes exposed to traffic loads. Include the appropriate plan notes to cover this testing whenever using the Modified B-25 Series barrier.

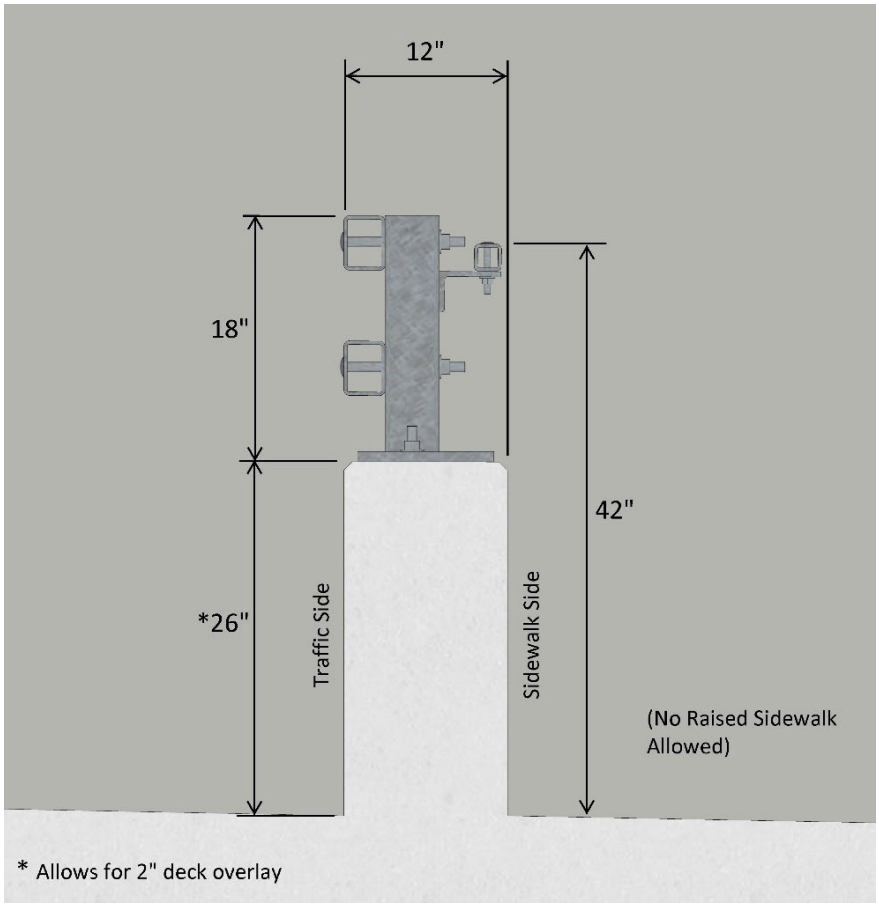

Figure 5.8.1.2.4-3. Iowa DOT "Modified B-25 Series" TL-3/4 separation railing (see Project No. BRF-028-2(45)--38-77, Design No. 125 Polk for a railing application)

5.8.1.2.5 Aesthetic and special railings

[AASHTO-LRFD 13.7-13.9]

Bridges that are given special aesthetic treatment usually will include redesign of standard traffic, pedestrian, bicycle, and/or combination railings. Historic bridge replacement projects may require special traffic or pedestrian railings to meet or supplement mitigation requirements. In situations where sight distance considerations apply, such as in or near urban areas, railings may need to be specially designed or selected for better motorist visibility.

Design of pedestrian and bicycle railings and fences generally can be accomplished easily within the rules for geometry and loads in the AASHTO LRFD Specifications [AASHTO-LRFD 13.8, 13.9]. Concrete parapets with aesthetic features may sometimes be used as part of a complete pedestrian/bicyclist fall protection system. Various atypical materials for railing components such as welded wire mesh, perforated metal panels, weathering steel and aluminum may be explored during the design process.

Side-mounting of railings to the bridge deck has been used for aesthetic and functional reasons (prevention of weathering steel staining on sidewalk) but is not advised for general use. Duplex coating systems for steel such as polyester powder coating over galvanizing is commonly used and may be considered. However, constructability, material availability and cost are important issues that the designer must also carefully consider. Occasionally, it has been prudent to query each of the DOT's approved railing fabricators for a constructability evaluation of a unique design prior to advertisement for letting, but this must be done with caution to avoid providing advantage to any single potential bidder. Coordination

with other Bureaus is required. Consult the Methods Engineer before considering any contact with fabricators.

Figure 5.8.1.2.5-1. Aesthetic Pedestrian and Bicycle Railing Examples in Iowa

When structures over high-volume roadways or railroads require the use of chain link mesh to limit pass-through, it can be aesthetically desirable to design a picket-style welded railing with traditional 4-inch or 6-inch gaps and attach chain link mesh to the outside face. From many viewpoints, the appearance of this type of system is more like that of a picket railing than of a plain fence and is aesthetically effective. The chain link mesh can be vinyl coated to remain compatible with painted or powder coated framing elements. Vinyl coating color is strictly limited to standard available colors (black, brown, green, white).

Chain link mesh with smaller openings than the standard 2”x2” (e.g. 1.25”x1.25”) can sometimes be desirable for aesthetics, to discourage climbing of the fence or pushing of objects through the mesh. Smaller mesh openings may be especially appropriate near schools or playgrounds. When chain link mesh fences taller than 6 feet are necessary, use standard available chain link mesh fabric width increments to determine overall system height.

Figure 5.8.1.2.5-2. Example Welded Picket Railing with Chain Link Mesh (project shown is NHSX-100-1(93)—3H-57, Linn. Co. Design No. 915)

Aesthetic design of traffic railings is complicated because of the need to meet a designated *NCHRP Report 350* crash test level [AASHTO-LRFD 13.7] as well as constructability and cost criteria. Appropriate end sections such as SETs [BDM

5.81.1.5] for low-speed conditions or end sections for approach guardrail or crash cushion attachment must also be available for use with the chosen barrier type. Note that Iowa DOT typically adds 2 inches to the height of any crash-tested barrier system to account for future roadway grade raise. Establishment of MASH equivalency for many barrier systems is an ongoing task and may impact the validity of non-standard barrier selections. Consult with the Methods Engineer before considering use of any non-standard traffic railing.

Aesthetic enhancement of a standard single slope concrete barrier is possible in several ways. First, the back (non-traffic) face may receive rustication, form liner texture, projected surfaces, or a combination of these. Most treatments involving manipulation of concrete surfaces will require additional width to be added to the standard barrier footprint. Coloration is also possible using post-applied color coatings on the outside face or throughout the barrier concrete using integral color pigment.

Unless clear concrete cover beyond the established minimum is already present in the barrier section to accommodate surface texture, form liner texturing of the outside face of concrete traffic barriers will require inclusion of additional barrier width equal to or greater than the depth of the texture to maintain the minimum clear concrete cover over near reinforcing. For aesthetic enhancement of the standard single slope barriers, it essential to maintain the standard reinforcing. Unreinforced outside face projections must not exceed 4 inches of unreinforced concrete, which typically limits projections to 2 inches maximum.

Many types of barrier aesthetic treatment cannot be slip-formed, so the designer must consider the implications of casting barriers in place on the project's cost, constructability, and construction duration. Barrier construction work is often one of the last operations that occurs prior to bridge completion, roadway opening, and the contractor vacating the site. On horizontally curved bridges, cast-in-place forming requirements for barrier aesthetic treatments may represent more significant constructability and cost implications when compared to slip-formed barrier solutions.

Horizontal rustications can be added to the outside face of standard concrete barrier shapes and remain slip-formable, and therefore economical. If typical 1.50-inch wide by 0.75-inch deep V-grooves are used, no increase in clear concrete cover or barrier width is necessary to accommodate the rustications.

Integral coloring of concrete barriers has also been successfully employed on Iowa projects, both slip-formed and cast-in-place. Relevant Special Provisions are available from past project work.

The use of post-applied color treatments on traffic faces and tops of concrete barriers is generally discouraged, due to harsh roadway conditions. Salt brine splashing and chemical action, vehicle strikes, and snowplow scraping can have severely detrimental effects on post-applied coloring systems. Barrier top surfaces that have been over-tooled during finishing can exhibit durability problems that become

exaggerated by the presence of post-applied coatings. The outside faces of traffic barriers are generally acceptable surfaces for post-applied color treatments. Special notes are necessary to ensure that no incompatible curing agents or sealers are applied to barrier surfaces intended to receive post-applied coatings. Consult the Methods Engineer before considering barrier coating treatments.

Figure 5.8.1.2.5-3. Examples of Barrier Outside Face Rustication and Texturing

If any part of the traffic face of a barrier contacted by a vehicle is not smooth, it may cause a vehicle to snag, which is undesirable. Therefore, it is necessary to limit rustication depth in barrier faces and chamfer the edges of rustication. See “Acceptance Letter B110: Texture Guidelines for SS and Vertical Concrete Barriers” and *NCHRP Report 554* [BDM 5.8.1.1.5] for further details on acceptable traffic face rustication. Shallow texturing or rustication of the traffic face of some barrier shapes is generally possible when in conformance with the guidance found in these publications. In general, surface rustications up to 0.50-inch deep with beveled edges are acceptable, as are some shallow textures created by form liners. Consult the Methods Engineer before considering barrier traffic face treatments.

Systems for integral thin veneer brick for structural concrete have been used on traffic barriers in Iowa, for both the traffic face and outside surfaces. If used on the traffic side, brick surfaces must generally be kept flush or within 0.50 inch of the untreated traffic face concrete surfaces. Edges of recessed brick zones must be beveled at 45 degrees. On past projects, integral thin brick has been considered part of the clear concrete cover over reinforcing, so no additional barrier width was required for accommodation.

Figure 5.8.1.2.5-4. Examples of Barrier Traffic Face Treatments

The Modified B-25 Series barrier system [BDM 5.8.1.2.4] is a combination steel-on-concrete barrier design that is approved for use up to TL-4 on Iowa projects. Consult the Methods Engineer before considering use. This barrier type can help to preserve views to scenic areas visible from the bridge. Combination steel-on-concrete barrier systems should generally not include painting of the steel components due to the harsh conditions mentioned above. Plain galvanized steel traffic railing surfaces are preferred. When painted steel is used, the Iowa DOT prefers a duplex coating system, i.e. galvanizing with a high-performance paint system such as 3-coat fluoropolymer or polyester powder coating. Consult the Methods Engineer before considering steel traffic railing paint coatings. Note that all combination steel and concrete traffic barrier systems used on Iowa projects must include requirements for ASTM E 436 embrittlement testing of any cold-rolled and galvanized steel pipes or tubes intended for exposure to traffic loads. In addition, epoxy-anchored steel traffic railings typically must refer to the Developmental Specifications for Installing Adhesive-Bonded Anchors and Dowels for Traffic Railings.

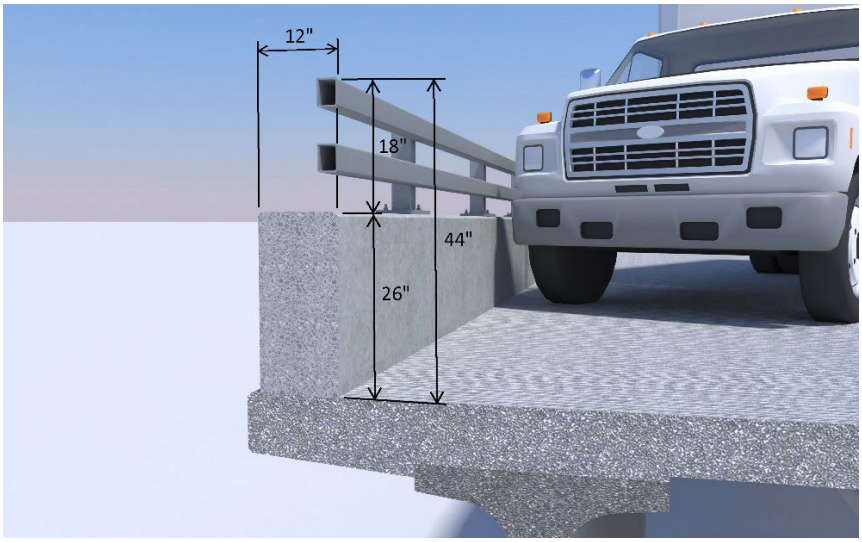

Figure 5.8.1.2.5-5. Modified B-25 Series Barrier

Some Iowa DOT and Local Systems projects located within communities have employed the Texas Classic barrier type, a concrete barrier with many small vertical openings. These are especially popular for historic bridge replacements because the character of these barriers emulates historic concrete barrier styles. Maintenance concerns have been raised about how snow removal equipment may interact with these barriers, and the potential for snow and ice to be pushed through the openings and off the bridge. District maintenance staff should be engaged for feedback on their use. Consult the Methods Engineer before considering use of the Texas Classic barrier type.

The Texas Classic comes in multiple types: 32-inch tall T411 and 42-inch tall C411, both crashworthy to MASH TL-2 conditions or lower. Both versions have multiple vertical openings that are formed by standardized liner components that are readily available to contractors. Some Iowa contractors have experience in constructing the Texas Classic barrier types. When used as a separation barrier, the overall height must be raised, and the lower segment (below the windows) increased to maintain ADA compliance at the base of the barrier along a raised sidewalk. Consult the Methods Engineer for example details. A steel bicycle railing attachment is generally not possible for this barrier type, so usage as a trail separator is discouraged since it would require a Design Exception process due to its lack of a grab rail for an out-of-control bicyclist.

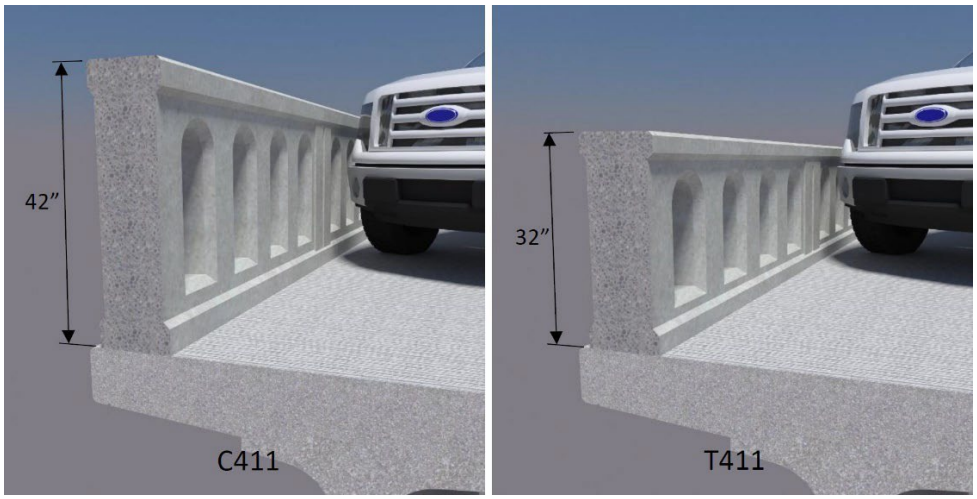

Figure 5.8.1.2.5-6. Texas Classic Barriers C411 and T411

The bicycle railing attachment on the IBBR separation barrier system [BDM 5.8.1.2.4] can be enhanced only by using a duplex coating system such as powder coating or 3-coat fluoropolymer paint over galvanizing, but this is discouraged in most cases due to the harsh roadway conditions previously mentioned in this section. The IBBR steel railing details must remain identical to the crash-tested version. The bicycle railing attachment on the BMBR separation barrier system [BDM

5.8.1.2.4] can be enhanced by a coating or by manipulation of the railing component shapes, provided the railing remains at least 12 inches from the traffic face of the barrier and projects no more than 4 inches into the sidewalk/trail. The addition of vertical or horizontal railing components to the basic railing is discouraged due to the potential for bicyclist interaction with added components, and because it may reduce the barrier's overall transparency which may provide benefits to sight distance within urban and interchange environments.

Attachment of non-crash-tested metal railings, fences or other features for the purpose of ornamentation or decoration is not allowed within a traffic barrier's Zone of Intrusion [BDM 5.8.1.1.4] for the posted speed. For the current ZOI limits for all barrier Test Levels see Iowa DOT Design Manual Section 8A-6. If the posted speed differs substantially from the barrier's test conditions, it may be possible to reduce the effective ZOI through engineering judgment or analysis. Consultation with the Methods Engineer is required to establish the effective ZOI in these cases. Mounting of the decorative feature(s) to the back side of the traffic barrier may locate the feature entirely outside of the barrier's ZOI in some cases. The mounting of such attachments must not negatively affect the barrier's structural performance and increase the maintenance burden on the structure. Agreements between the Iowa DOT and the local municipality or other authority are often required to establish funding and maintenance responsibilities for such attachments on State-owned structures.

5.8.1.2.6 Concrete railings

Concrete railings shall be placed either by the slipform method with Class BR concrete [IDOT SS 2513.03, A, 2] or by the cast in place method with Class C concrete. Due to quality issues, Class D concrete no longer is permitted for placing rails by either method. The designer shall include general note E188 [BDM 13.3.2] on the plans. Bid item reference information designates permissible concrete class.

Relatively wide expansion joints in concrete barrier railings require steel cover plates. The designer shall provide cover plates whenever the maximum expansion joint opening is 4 inches or greater. Details shall be as follows:

- The entire barrier rail joint opening (front and back) shall be covered by a galvanized steel plate with a minimum thickness of 3/8 inch and shall extend a minimum of 9 inches past the expansion opening. Larger plate thicknesses should be considered for openings greater than 6 inches.
- The plate shall be fabricated to conform to the front face of the barrier including the top. In addition, a separate back plate shall be used that meets the front plate at the top of the barrier rail.
- The joint where the two plates meet shall be sealed with light gray non-sag latex caulking sealer marketed for outdoor use.
- The exterior face of the plates shall be recessed ¼ inch below the surface of the rail to reduce potential for snagging. Plates shall be detailed so that traffic passes the attached ends first and in passing cannot snag the sliding ends.
- The cover plate will allow for the full thermal movements required at that joint location plus any setting factors that are required for the joint.

For cover plates on pedestrian, bicycle, separation, and aesthetic railings the designer shall consult with the supervising Unit Leader and Aesthetic Specialist.

5.8.1.3 Temporary barrier railings

For staged construction the Design Bureau usually is responsible for layout of temporary barrier rail (TBR). The Bridges and Structures Bureau generally provides input on the placement of the TBR with respect to the deck cross-section. The TBR may be either concrete or steel, but the Bureau does not permit the use of a combination of both types of rail in the same installation. Additional information on the use of TBR is given in a bridge repair article of this manual [BDM 12.1.8.3].

5.8.1.3.1 Concrete

Concrete temporary barrier rail is detailed on several Design Bureau standard road plan sheets [DB SRP BA-401]. The standard rail has a double F-shape, a 32-inch height, and 12.5-foot lengths.

Typical layout of the rail for one-way and two-way traffic is shown on standard sheets [DB RDD 8210, 8212]. Details of the

placement policy are given elsewhere in this manual [BDM 12.1.8.3].
Rules for use of tie-downs are given in the Design Bureau's design manual [DB DM 9B-9] and on a standard sheet [DB SRP BA-401].

5.8.1.3.2 Steel

Steel HP 14x73 temporary barrier rail is composed of two pile sections welded flange tip to flange tip, with a concrete fill [DB DM 9B-9, DB SRP BA-400, and DB RDD 560-07]. The height of the cross section is

29.25 inches, and the length of a rail section is 20 feet.
Typical layout of the rail for one-way and two-way traffic is shown on standard sheets [DB RDD 8210, 8212]. Details of the placement policy are given elsewhere in this manual [BDM 12.1.8.3].

C5.8.1 Railings

C5.8.1.1.1 Policy overview

Before 01 August 2023 ~ F-shape barrier rails and NCHRP 350

MASH 2nd edition (2016) compliant single slope rails were incorporated into the BDM in August 1, 2023 and were incorporated into projects starting with the October 2024 letting. Previous to these dates most new Iowa highway bridges made use of F-shape barrier rails based on National Cooperative Highway Research Program (NCHRP) Report 350 (1993). The F-shape rail is a safety shape similar to the older New Jersey shape except for some geometry modifications which reduced vehicular climbing. The 34-inch tall and 44-inch tall Iowa standard F-shape barrier rails met NCHRP 350 Test Level 4 (TL-4) and Test Level 5 (TL-5) criteria, respectively. Note that the Iowa standard F-shape barrier rails were 2 inches taller than the minimum heights required for TL-4 and TL-5 barrier rails under NCHRP 350 to account for the possibility of a 2 inch thick future overlay. Table C5.8.1.1.1 list the CADD standard sheets containing the F-shape barrier rail details that were in use prior to August 1, 2023. Figure C5.8.1.1.1 has representative cross-sections of the TL-4 and TL-5 F-shape barrier rails.

Table C5.8.1.1.1 Standard F-shape barrier rails for PPCB and CWPG bridges (1)

Test Level	Abutment Type	Skew	Additional Information	End or Standard Rail Section	Standard Sheet Number (2)
TL-4	---	---	7’-0 wing	End	1017, 1017S
TL-4	Integral	---	---	Standard	1020A, 1020SA
TL-4	Integral	---	Wing extension	Standard	1020C, 1020SC
TL-4	Integral	---	Urban approach slab with curb	End, standard	1019A, 1019SA
TL-4	Stub	No skew	Wing extension	Standard	1020B, 1020SB
TL-4	Stub	Skew	Wing extension	Standard	1018, 1018A, 1018S, 1018SA
TL-4	Stub	No skew	Urban approach slab with curb	End, standard	1019B, 1019SB1, 1019SB2
TL-5	Integral	---	---	Standard	1020D, 1020SD
TL-5	Integral	---	Wing extension	Standard	1020F, 1020SF
TL-5	Stub	No skew	Wing extension	Standard	1020E, 1020SE
TL-5	Stub	Skew	Wing extension	Standard	1018C, 1018D, 1018SC1, 1018SC2, 1018SD1, 1018SD2

Table Notes:

(1) This Table was previously designated as Table 5.8.1.2.1.1 when it was present in the main body of the BDM prior to August 1, 2023. Signed standard bridge plans for CCS, PPCB and RSB bridges also include details for standard F-shape barrier rails. [Some of the table notes from the original table were modified or deleted since the context of those notes no longer fits.]

(2) A designation of “S” in the standard sheet number indicates the use of stainless steel for the barrier rail to bridge deck/wing reinforcement.

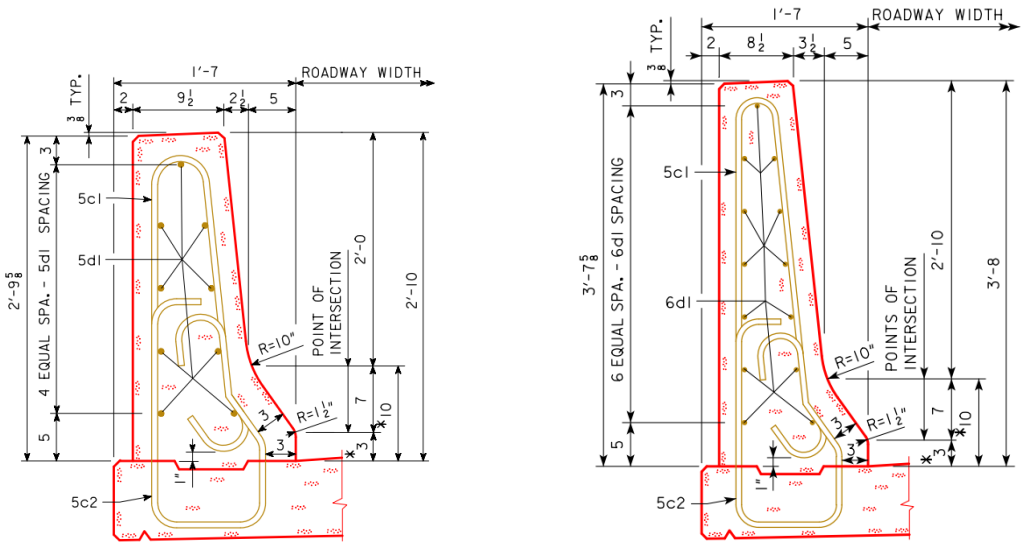

Figure C5.8.1.1.1 Typical TL-4 and TL-5 F-shape barrier rails

01 January 2015 ~ Guidelines for stainless steel

BSB adopted the use of stainless steel rebar between the barrier rail to bridge deck/wing connections for interstate and primary bridges starting with the January 2015 letting.

Before 01 October 2007 ~ Guidelines for conduit and lighting on bridges

The policy for lighting on bridges up until October 1, 2007 has been for the design engineer to evaluate whether the bridge is located near an urban area. For projects determined to be in an urban area, the Engineer had to make a request (send a copy of the TS&L) to the Traffic and Safety Bureau to determine the lighting and conduit requirements. Traffic and Safety would determine the conduit size and locate the conduit and light pole bases (if needed) on a TS&L sheet for the bridges submitted and return the information back to our Bureau. This policy was revised on October 1, 2007.

After 01 October 2007 ~ Guidelines for conduit and lighting on bridges

Conduit will be provided in accordance with the Traffic and Safety Manual, Chapter 6E-1, “Bridge Lighting” (http://www.iowadot.gov/traffic/manuals/pdf/06e-01.pdf). If the bridge is near an urban area or interchange, then the bridge may require light pole blisters. In this case the TS&L should be submitted to the Traffic Engineering Unit of the Traffic and Safety Bureau for review. Traffic and Safety will review the site to determine if existing lighting is present or if a lighting project is planned in the near future. If it is determined that continuous lighting will be present at this location, light pole blisters and possibly underdeck lighting will be located and noted on a TS&L sheet and returned to the Engineer.

Where possible, light pole blisters should be centered above substructure elements. Consult the Traffic and Safety Bureau regarding adjustments of light locations to coincide with pier centerlines. Junction boxes will be placed at both ends of a bridge as a minimum. Additional junction boxes may be required to keep the maximum distance between them less than 500 feet. The maximum junction box spacing depends on the equipment used by the contractor. Most contractors can handle pulls under 500 feet and some contractors can handle pulls of 1000 feet and more. Conduits should be placed to line up with the junction boxes provided when possible, to limit the number of bends required in the conduit. The sum of the conduit bends between junction boxes shall not be more than 360 degrees as specified in the “National Electric Code”.

In discussions with our lighting crews, it was found that conduit could be cleaned out and used even if the bridges have been in service for a number of years. CADD standard 1030A, 1and 2 of 2, “Lighting Details” are available.

01 July 2015 ~ Statement concerning PVC conduit

Conduit used in concrete barrier rails shall be galvanized rigid steel conduit. PVC conduit shall not be substituted. PVC pipe can experience damage during concrete placement particularly when barrier rails are slip formed. Additionally, the difference in the coefficient of linear expansion between PVC and concrete requires a significant number of expansion fittings which are prone to durability issues.

01 January 2016 ~ Additional conduit guidelines for ITS communication wires

Separate conduit and junction boxes should be used in the rail when both conductor and communication wires are required. ITS communication wires require a 2” minimum conduit and no more than six 45-degree elbow bends between conduit junction boxes with a minimum inside bend radius of 18 inches. CADD Note E1085 should be included in the plans when I.T.S. conduit is required.

C5.8.1.2.1 Traffic railings

01 August 2023 ~ Bridge Railing Selection on Interstate and Primary Highways

The policy w.r.t. the selection of TL-4 and TL-5 rail has remained the same, but the rail types have changed from NCHRP 350 F-shape rails to MASH single slope rails. Figure 1 below was updated in BDM 5.8.1.2.1 for the new rails and rail heights. No other changes were made to the policy.

29 June 2007/Revised 11 June 2009 ~ Bridge Railing Selection on Interstate and Primary Highways

Generally, TL-4 (minimum height of 34”: 32” plus 2” for future overlay) is considered acceptable for most interstate and primary roads with a mixture of trucks and heavy vehicles. But in some cases, other factors may require the use of TL-5 (minimum height of 44”: 42” plus 2” for future overlay). These factors may include:

- Traffic volume and mix: The presence of high number of a van-type tractor-trailer as determined from predicted traffic data for the design year.
- Unfavorable site conditions where a rollover or penetration beyond the railing could result in severe consequences. This applies to bridges with fracture critical elements within the zone of intrusion or flyover bridges. Unfavorable site conditions include:
    - Reduced radius of curvature
    - Steep downgrades on curvature
    - Variable cross slopes

  Examples of fracture critical elements may include cables on cable stayed bridges, hangers on arch bridges, and truss members on truss bridges or supports for sign structures.
- Approach roadway rail height
- Headlight glare
- Snow pile up during snow removal spilling over roadways below
- Snow pile up causing ramping up the barrier rail

The need for TL-6 (minimum height of 92”) railing which is suitable for higher level of protection is not anticipated for the vast majority of bridges in Iowa.

A flow chart (**Figure 1 was revised on 5 May 2009 to include bridges over BNSF and UP Railroads.**) has been developed to aid in the determination of the appropriate test level. The appropriate test level/rail height will need to be determined by the Pre-Design Unit (Design Bureau) in the early phase of project conception with input from the Districts during concept field exam. On projects that are not initiated in the

Pre-Design Unit, the determination of the test level will be the responsibility of the Preliminary Bridge Design Unit (Bridges and Structures Bureau). This effort will require some coordination among the various Engineering Bureau offices and the Districts.

Based on examining the factors discussed above and the predicted truck traffic for 2035 (see Figure 2), all mainline interstate bridges except as noted below would qualify for TL-5 railing with a height of 44”. Rail height on mainline bridges near on-ramps need to be investigated for potential conflict with sight distance. Bridges on other highways in Iowa, overhead bridges and ramp bridges would require a similar evaluation using the attached flow chart. Overhead bridges near interchanges, especially in urban areas near side roads/streets, will require close evaluation of the available sight distance to avoid potential conflict.

The evaluation criteria discussed in this memo applies to both the median and outside railings and in some cases may results in different railing heights on the same bridge. Other considerations such as aesthetics may influence the decision on whether same railing height would be used for both the median and outside railings. Cost is a minor contributor based on comparing concrete volumes between the 34” and 44” rails. The 44” rail requires an additional 0.023 cu. yd. of concrete per lineal foot.

This policy is applicable to new bridges, bridge replacements, deck replacements and bridge widening. Bridge repair or rehabilitation projects where the existing railing is not affected by such work will not be required to comply with this policy and no retrofit is needed.

FIGURE 1

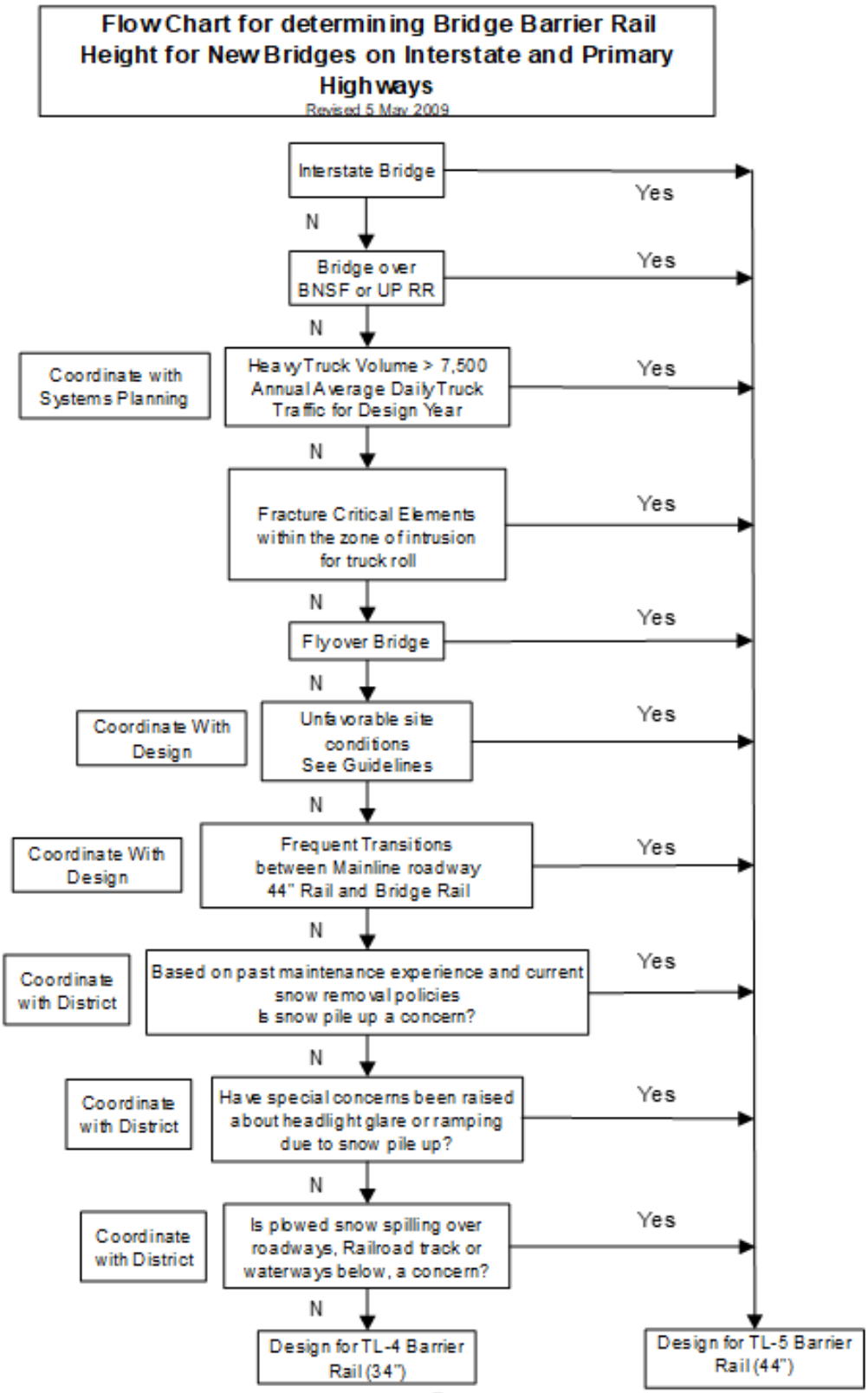
Flow Chart for determining Bridge Barrier Rail Height for New Bridges on Interstate and Primary Highways
Revised 5 May 2009
Interstate Bridge
Yes
N
Bridge over BNSF or UP RR
Yes
N
Coordinate with Systems Planning
Heavy Truck Volume > 7,500 Annual Average Daily Truck Traffic for Design Year
Yes
N
Fracture Critical Elements within the zone of intrusion for truck roll
Yes
N
Flyover Bridge
Yes
N
Coordinate With Design
Unfavorable site conditions See Guidelines
Yes
N
Coordinate With Design
Frequent Transitions between Mainline roadway 44" Rail and Bridge Rail
Yes
N
Coordinate with District
Based on past maintenance experience and current snow removal policies Is snow pile up a concern?
Yes
N
Coordinate with District
Have special concerns been raised about headlight glare or ramping due to snow pile up?
Yes
N
Coordinate with District
Is plowed snow spilling over roadways, Railroad track or waterways below, a concern?
Yes
N
Design for TL-4 Barrier Rail (34")
Design for TL-5 Barrier Rail (44")

FIGURE 2

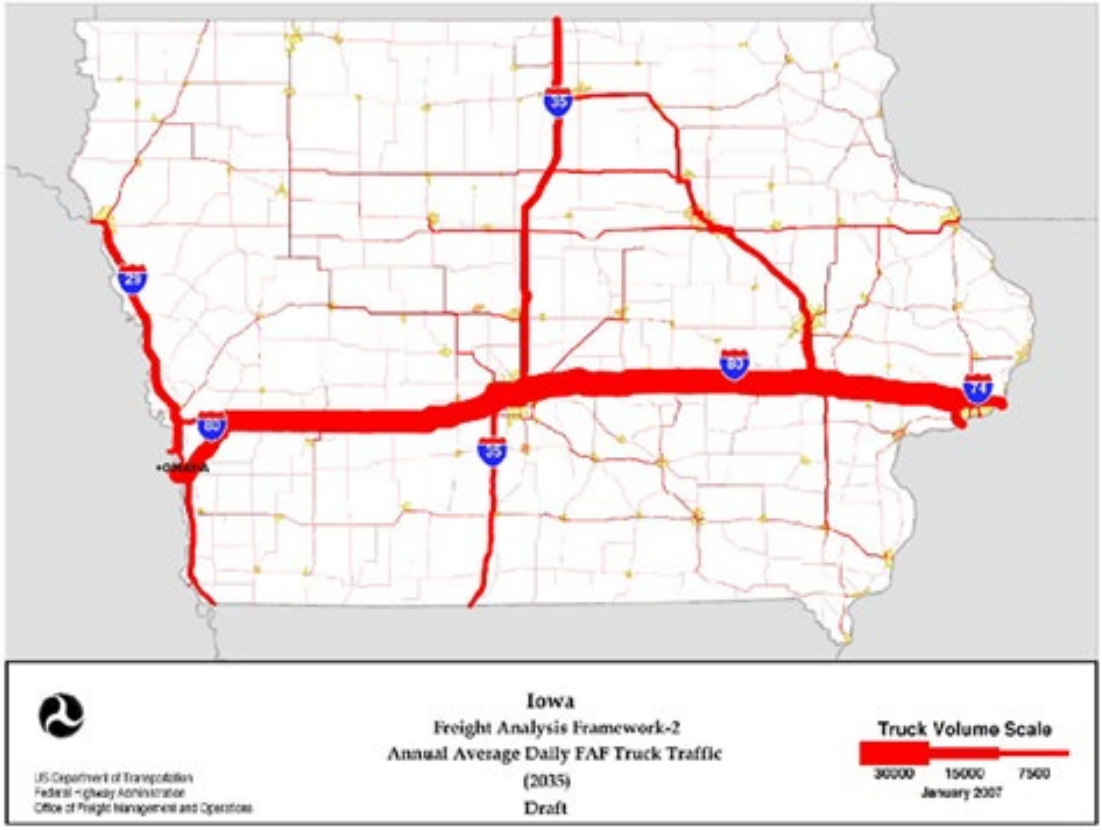

C5.8.1.2.4 Separation railings

01 August 2023 ~ Additional discussion of separation railings

The Iowa DOT BSB's standard TL-4 and TL-5 single slope (SS) concrete barriers are currently not anticipated to be used as separation barriers on bridges for several reasons. First, it is standard Iowa DOT practice to use combination traffic and pedestrian railings that are also bicycle compliant, and an all-concrete barrier does not meet the full intent of a bicycle separator because it lacks a steel tube railing that can be easily grasped by a falling cyclist (AASHTO *Guide Specifications for Bridge Railings, C G2.7.1.2.2*). If used without a bicycle railing along a trail, a Design Exception would be required. The addition of a steel tube railing to the Iowa DOT standard TL-4 SS barrier at the proper height for a cyclist would place the attachment within the barrier's ZOI, which is not allowed. Such a bicycle railing attachment could be placed on the back side of the standard TL-5 SS barrier and remain outside the ZOI, but only if the sidewalk/trail surface was not raised. Either the TL-4 or TL-5 SS barrier could potentially be used as a separator without attaching a bicycle railing and meet AASHTO requirements for a pedestrian-only separator (i.e. min. 24 inches tall on the sidewalk side), but again this would go against Iowa DOT standard practice of accommodating occasional bike traffic on all side paths on bridges. Additionally, at least one incident has been reported involving pedestrian injury associated with a short separation barrier with no bicycle railing.

In some cases, it may be desirable to omit the steel bicycle railing from a sidewalk separator, especially on narrow sidewalks where bicycle traffic is discouraged, where no significant bicycle traffic is expected, or where bike lanes are located within the roadway. Sight distance issues can also be made more complicated by barrier attachments when bridges are located in urban conditions. In these cases, the separation barrier must be a minimum of 24 inches high on the pedestrian side (AASHTO 1989 *Guide*

Specifications for Bridge Railings G2.7.1.2.2). Omission of the bicycle railing or violation of the 42 inch minimum separator height is strongly discouraged at locations near schools, playgrounds, parks, or other facilities that attract children. It may also not be desirable to omit the bicycle railing when replacing a bridge that included a precedent separator with bicycle railing, regardless of other conditions. In cases where a bicycle railing is required but is considered for omission, an approved Design Exception is required before proceeding. Consult the Methods Engineer when special cases arise.

In congested urban conditions and other cases where sideroad tie-ins may be very close to bridge ends, sight distance can be difficult or impossible to achieve if the separation barrier on the bridge is as tall as the standard or typical applications. It has been necessary on some projects to eliminate the bicycle railing attachment, reduce the height of the concrete barrier, or both. Any such reductions in required minimum height(s) will typically require a Design Exception to be submitted to FHWA for review and approval prior to commencing design.

For some specific conditions in urban low speed zones, crash-tested low profile TL-2 concrete separation barriers or barrier curbs may be desired to eliminate sight distance issues. However, this type of barrier may be deemed insufficient for containment of vehicles on the bridge, thus an acceptable barrier may also have to be located at the edge of deck along the sidewalk or trail. Complications can result when these combination barriers also have to provide fall protection for pedestrians. Options should be discussed with the Methods Engineer before proceeding to incorporate such special separation barrier configurations into projects.

C5.8.1.2.5 Aesthetic and special railings

01 August 2023 ~ Additional discussion of aesthetic and special railings

There are some aesthetic and special traffic barrier types that have been used on past projects in Iowa but are no longer considered viable for use under the current MASH specifications. Those barriers are listed here along with reasons they are no longer used on Iowa DOT projects. Projects may occasionally arise where there is a compelling reason to match an existing barrier configuration that may appear below. Assessments for re-use will be made on a case-by-case basis.

- **F-shape Barrier with Back Face Projection** - The F-shape is not being carried forward under MASH and has not been approved for continued use. The back face projection was not effective enough at increasing aesthetic appeal compared to the amount of material and effort required to construct it. Barrier back face rustication has been determined to be as effective.
- **Texas T80HT F-Shape with Steel Traffic Railing** - Also known as the PennDOT PA HT, this TL-5 barrier has not been re-tested under MASH and is not currently approved for use in Iowa. The elliptical top tube is manufactured by only one fabricator in the US, making it effectively proprietary which is not desirable under Iowa code. Steel railing installation quality has been poor on some projects using this barrier and detailing of expansion joints in the tube has raised questions about its long-term performance. The barrier also has high cost.
- **MnDOT Steel-on-Concrete Combination Railing** - This rail was used extensively on I-235 but has not been re-tested to MASH specifications and is not currently approved for use in Iowa. Height does not meet MASH TL-4 minimum requirements when 2-inch future grade raise is considered. Steel railing has suffered damage during service from vehicle contact and snowplow blades, compromising both the outer paint coating and the galvanizing in some instances. The barrier also has high cost.
- **Low-Profile TL-2 Barrier** - This barrier has been used on just one bridge in Iowa (E. 9th St. over I-235) to solve a severe sight distance problem. The barrier has not been re-tested under MASH and is not currently approved for use in Iowa. Use of this barrier requires a Design Exception process because it does not meet height minimums established by AASHTO specifications.
- **34-inch and 44-inch Vertical Face Barriers** - Originally based on designs from South Dakota and used extensively on past Iowa projects, these are not currently approved for use in Iowa. The 34-inch version no longer meets TL-4 minimum height requirements. The standard single slope 38-inch and 44-inch barriers are effectively similar in appearance and allow for similar aesthetic enhancement, so there is no aesthetic reason to continue using the vertical face barriers. The

BMBR separator [BDM 5.8.1.2.4] can be used for TL-2 conditions or less and is similar in configuration to the 34-inch vertical barrier.

- **Michigan BR27C** - This barrier has been replaced by the updated Modified B-25 Series barrier [BDM 5.8.1.2.4] which is approved for use on Iowa DOT projects.

Some bridge barriers and hardware attachments that have been previously used in Iowa are under review at this time and are not approved under the Iowa DOT's MASH implementation policy. Some of these may not be approved for use in the future. These are as follows:

- **54-inch Single Slope (for structure shielding)**
- **44-inch Single Slope with Setback Top (for median conditions only)**
- **Texas C412 MASH TL-5 concrete barrier**
- **Barrier-mounted chain link fence (for debris retention, other)**
- **Acrylite Soundstop TL-4 Noise Wall System (barrier-mounted)**

The **PennDOT PA MASH TL-5 combination steel-on-concrete traffic barrier** has been approved for use on the Iowa 9 bridge over the Mississippi River in Lansing, IA. This barrier was chosen for its tall overall height to maximize protection from vehicle strikes for the above-deck truss superstructure. This barrier is not intended for general purpose use on other Iowa projects but may be considered if a similar situation arises where structure shielding is of special concern. This railing is expected to have high cost due to the steel railing and its embedded anchorage which requires cast-in-place parapet construction. There is currently no approved drilled-in anchorage to replace the preset condition. Consult the Methods Engineer before considering use of this barrier.

Some projects at the Local Systems (county, city) level have employed bridge barrier types not listed here. Some are barriers approved by other states such as the **Wyoming 2-Tube railing** and the **MnDOT combination traffic and bicycle railing**. Since barriers on Local Systems projects that are not on the NHS are not required to meet MASH specifications, these barriers are not addressed in this section. However, when these projects come under State review the Iowa DOT and the Bridges and Structures Bureau reserve the right to issue comments and recommendations relative to barrier hardware on these projects wherever barrier choices and detailing are related to safety and performance concerns. The Iowa DOT will not evaluate the potential performance of unapproved barrier systems and Local Systems plan information will not be thoroughly checked for accuracy.

The following comments are observations regarding various unusual or unique pedestrian fence and railing materials used on past Iowa DOT projects, and should be kept in mind when designing features that include these materials:

- **Welded Wire Mesh** - When welding is the attachment method for mesh to framing, material requires significant detailing and notation to ensure that best welding practices are employed. The mesh typically requires mechanical manipulation to properly engage with framing elements when welding. Welds should not occur on both ends of the same wire, since subsequent galvanizing operations can distort the mesh to a degree that results in tensile breakage of wire or failure of one or both welds. Some mesh distortion in the finished result is inevitable and must be considered tolerable in the design. Care must be taken in selection of wire thickness to avoid the possibility of permanent deformation from pedestrian contact or vandalism. When mesh is placed directly adjacent to bike facilities, it is preferable to orient mesh so that the horizontal wires are on the bikeway side to limit handlebar snagging potential on the vertical wires.
- **Perforated Metal** - This material can be particularly expensive, especially in aluminum. All suppliers who carry the material sought for use on a project shall be listed in the plans. Care must be taken in selection of sheet thickness to avoid the possibility of permanent deformation from pedestrian contact or vandalism. Since the punch-out side of the perforations is typically left sharp from the manufacturing process, it is preferable to locate that side of the sheet way from pedestrians, and not to select punched openings that could trap or cut fingers. Painting is not advised, also due to the sharpness of corners and thinness of the sheet product. Weld

attachment of this material to framing must carefully consider distortion effects, as should any specification that calls for galvanizing a perforated metal assembly. Bolted assembly may be preferable due to these factors, but distortion can also occur due to thermal factors after installation if panels are not properly allowed to expand and contract independently from the framing.

- **Weathering Steel** - Availability of the proposed steel sections must be checked before committing to this material. Is typically more expensive than other typical steel products, even those with finishes included (galvanizing, paint or powder coating). It is best to require application of 5 water mist treatments at the fabrication facility prior to delivery to the jobsite to thoroughly begin the weathering process. Staining of surrounding surfaces by leachates will occur throughout the life of the material, so detailing should attempt to address this, or staining must be considered tolerable in the design. Side-mounting of weathering steel railings has been done and is effective at controlling - but not eliminating - staining on the adjacent walkway surface. It is not advisable to use weathering steel railings adjacent to high volumes of high-speed traffic due to salt-laden spray or fog settling onto the material and causing excess corrosion.
- **Aluminum** - This material is very expensive, and the pool of Iowa DOT-approved fabricators is limited. Specifications must be thoroughly checked for the application and material availability established before committing to this material. Colors are limited to the available standard anodize finishes. It is currently unknown how well the darker colors of anodized aluminum railing perform near roadways, or if they are negatively and permanently impacted by salt spray. Painting of aluminum railings is not advised.
- **Acrylite (formerly Paraglas) Panels** - This material is currently proprietary which requires a Public Interest Finding for use on Iowa DOT projects. Some custom shaping (single-direction curvature) is possible with this material. Machining requirements should be investigated and understood before providing plan guidance to the fabricator. It may be best to specify that the supplier/manufacturer’s recommendations be strictly followed for most preparatory work. Framing elements are typically custom and may require proprietary components, in whole or in part (e.g. gaskets). This material reportedly has good graffiti remediation potential, since the panels can be flamed with a torch in a controlled manner to burn off some common petroleum-based spray paints without permanently damaging or distorting the panel.

TABLE OF CONTENTS ~ PEDESTRIAN FACILITIES

5.8.2 Pedestrian facilities
5.8.2.1 General
5.8.2.1.1 Policy overview
5.8.2.1.2 Design information
5.8.2.1.3 Definitions
5.8.2.1.4 Abbreviations and notation
5.8.2.1.5 References

5.8.2 Pedestrian facilities

5.8.2.1 General

5.8.2.1.1 Policy overview

In general sidewalks and similar pedestrian facilities such as trails, shared use paths, and bicycle lanes are covered in other parts of this manual and in the Design Bureau's Design Manual [DB DM Chapter 12]. Pedestrian facilities on a bridge need to be coordinated with facilities off the bridge, and there are differences in policy depending on whether the bridge also carries highway lanes.

The first design decision is whether the pedestrian facility is to be a separate bridge or part of a highway bridge. That decision typically is a joint decision between the Design Bureau and the Preliminary Bridge Design Unit but may involve District and other Bureaus. For a separate bridge, a path under a bridge, or a path through an embankment, decision guidelines are given in the Preliminary Design section of this manual [BDM 3.5]. Decision guidelines for a pedestrian facility on a highway bridge are given in a separate article [BDM 3.6.2.2].

After the decision regarding the type of pedestrian facility is made, designers will need to consider the following.

- The facility must meet the Americans with Disabilities Act (ADA). The ADA and Iowa DOT policy include requirements for width, cross slope, grade, surface, discontinuities, and separation barriers [BDM 1.5].
- For a separate facility, considerations beyond ADA include width, drainage and snow removal, vertical clearance, fencing, hydraulic forces (if applicable), shy distance, and lighting [BDM 3.2.5].
- For a facility on a highway bridge, considerations beyond ADA include width, raise, and inspection and maintenance [BDM 3.6.2.2].
- Depending on the type of pedestrian facility the final designer will need to consider guidelines for a pedestrian railing [BDM 5.8.1.2.2], bicycle railing [BDM 5.8.1.2.3], and/or separation railing [BDM 5.8.1.2.4].
- Allowance for the load of a future wearing surface may need to be included with the sidewalk dead load [BDM 5.2.2.2].
- Live loads for a sidewalk [BDM 5.2.2.2] may need to be supplemented with a load for a maintenance vehicle in some pedestrian facility conditions. For a facility on a bridge live loads are to be considered along with vehicular loads [BDM 5.4.1.2.2, 5.5.1.2.2, and 5.6.1.2.2].
- For highway bridges with pedestrian facilities the final designer shall include in the plans a staking diagram [BDM 1.8.4] and a sidewalk approach slab detail sheet (or similar sheet for other pedestrian facilities) [BDM 1.8.10.6].

All structural design for pedestrian facilities shall be conducted using load and resistance factor design (LRFD).

5.8.2.1.2 Design information

For the final designer the basic decisions for the pedestrian facility will be included on the type, size, and location plan (TS&L). If additional information is needed the final designer shall consult with the preliminary designer and/or Design Bureau.

5.8.2.1.3 Definitions

Reserved.

5.8.2.1.4 Abbreviations and notation

ADA, Americans with Disabilities Act
LRFD, load and resistance factor design
TS&L, type, size, and location

5.8.2.1.5 References

Reserved.

TABLE OF CONTENTS ~ EXPANSION JOINTS

5.8.3 Expansion joints
5.8.3.1 General
5.8.3.1.1 Policy overview
5.8.3.1.2 Design information
5.8.3.1.3 Definitions
5.8.3.1.4 Abbreviations and notation
5.8.3.1.5 References
5.8.3.2 Strip seals
5.8.3.2.1 Analysis and design
5.8.3.2.2 Detailing
5.8.3.3 Finger joints
5.8.3.3.1 Analysis and design
5.8.3.3.2 Detailing
5.8.3.4 Tire buffing joints
5.8.3.4.1 Analysis and design
5.8.3.4.2 Detailing
5.8.3.5 Other joints

5.8.3 Expansion joints

5.8.3.1 General

5.8.3.1.1 Policy overview

Although the Bureau prefers jointless construction, some designs require deck expansion joints because of bridge length, bridge skew, use of stub abutments, use of expansion bearings, or other factors. Where expansion joints are necessary it is important that they be sealed and drained in order to protect both superstructure and substructure components from deterioration caused by runoff and deicers.

In general, expansion joint types are selected based on the amount of movement to be accommodated. Compression seals are rated for movements to 2 or 3 inches, strip seals are rated for movements to 4 or 5 inches, and finger joints are rated for movements to 10 inches or more.

As the Bureau has extended the policy limits for use of integral abutments there has been less need for expansion joints that accommodate small movements. Therefore, for new bridges the Bureau has eliminated use of compression seals in favor of strip seals. At skews above 30 degrees, strip seals lose movement capacity and may not be practical. For movements larger than strip seals can accommodate the Bureau designs and specifies finger joints. Except in unusual cases, strip seals or finger joints are adequate for expansion joints in Iowa bridges. Expansion joints other than strip seals or finger joints require approval of the supervising Unit Leader.

During rehabilitation of existing bridges the Bureau currently replaces compression seals with strip seals. If sliding plate joints are in good condition the Bureau rehabilitates and modifies the joints to remain in service. Sliding plate joints in poor condition are replaced with strip seals.

Typical strip seal details and notes, including watertight integrity testing, are given on standard sheets [BSB SS 1026s1 and 1026s2]. Approved manufacturers and products are given in an Construction and Materials Bureau Instructional Memorandum [CMB IM 436.02, Appendix A].

Currently there are no standard sheets or standard specifications for finger joints.

To improve the performance of portland cement concrete (PCC) approach pavement and expansion joints at integral abutments, the Bureau has developed a BE joint filled with tire buffings. The joint is shown on Design Bureau plans [DB SRP BR series] that are included with bridge plans. The BE tire buffing joint replaced CF tire buffing joints for projects in the October 2024 letting [CF joint details can still be found in DB SRP PV-101]. The CF tire buffing joints previously replaced foam plastic blocks that were difficult to maintain.

5.8.3.1.2 Design information

[AASHTO-LRFD 3.12.2]

Performance of expansion joints will depend on annual temperature cycles during the service life of the bridge and concrete shrinkage during the initial period of service. In lieu of Procedures A and B for temperature ranges in the AASHTO LRFD Specifications [AASHTO-LRFD 3.12.2] the designer shall use the ranges in Table 5.8.3.1.2. The table also includes appropriate thermal and shrinkage coefficients.

Table 5.8.3.1.2. Design temperature ranges, thermal coefficients, and shrinkage coefficients for expansion joints

Type of Superstructure	Design Temperature Range	Thermal Coefficient	Shrinkage Coefficient
Steel	75°F each way from 50°F, 150°F temperature range	0.0000065 /°F	--- (1)
Concrete	50° each way from 50°F, 100°F temperature range	0.0000060 /°F	0.0002 in/in (2)

Table notes:

(1) Although the concrete deck will shrink after placement, the typical shear stud attachment of the deck to the steel superstructure will cause the shrinkage to dissipate in small cracks throughout the expansion length rather than accumulating at the end. Therefore, shrinkage need not be considered for steel superstructures.

(2) Actual shrinkage (and creep) will vary depending on the type of concrete superstructure and scheduling of superstructure construction. The overall combination of temperature range, thermal coefficient, and shrinkage coefficient approximates the behavior of the deck in most situations.

With use of the information above and joint settings of 90, 50, and 10 degrees Fahrenheit as required in articles below [BDM 5.8.3.2 and 5.8.3.3], the designer need not apply a setting factor or an AASHTO LRFD load factor in design of strip seal and finger joints. Experience has shown that joints are correctly sized without application of modifying factors.

5.8.3.1.3 Definitions

Unit Leader is the supervisor of the Bridges and Structures Bureau Preliminary Bridge Design Unit, Final Design Unit, or Consultant Coordination Unit.

5.8.3.1.4 Abbreviations and notation

N, the number of teeth per wheel width
P, the finger load per tooth, k
PCC, portland cement concrete
W, the wheel load with impact, k
Wabo, Watson Bowman Acme Corporation

5.8.3.1.5 References

Bashore, F.J., A.W. Price, and D.E. Branch. *Determination of Allowable Movement Ratings for Various Proprietary Bridge Deck Expansion Joint Devices at Various Skew Angles, Final Report*. Lansing: Michigan Department of Transportation, 1980.

Bolluyt, J.E., V.B. Kau, and L.F. Greimann. *Final Report, Performance of Strip Seals in Iowa Bridges, Pilot Study, TR-437*. Ames: Iowa Department of Transportation and College of Engineering, Iowa State University, 2001. (Available on the Internet at: http://www.iowadot.gov/operationsresearch/reports/reports_pdf/hr_and_tr/reports/tr437.pdf)

Michigan Department of Transportation (MDOT). "Special Provision for Expansion Joint Device." Lansing: MDOT, 2004. (The Frequently Used Special Provision is available on the MDOT web site, http://mdotwas1.mdot.state.mi.us/public/dessssp, under Special Provisions – Frequently Used (2003) from 03SP706A link.)

Phares, B.P. and C. Duffy. *Evaluation of D.S. Brown Steelflex® Strip Seal Expansion Joint Systems at Skew*, Bridge Engineering Center, Iowa State University, Final Report, June 2019.

Purvis, Ron. *Bridge Deck Joint Performance, NCHRP Synthesis 319*. Washington: Transportation Research Board, 2003.

5.8.3.2 Strip seals

5.8.3.2.1 Analysis and design

Because of consolidation in the strip seal industry, only two manufacturers provide approved products [CMB IM 436.02, Appendix A]:

- D.S. Brown Company, and
- Watson Bowman Acme Corp. (Wabo).

Feasibility of approved strip seals for steel and concrete superstructures may be determined from the maximum allowable expansion lengths in Table 5.8.3.2.1-1. Considering the recent increases in allowable bridge lengths for use of integral abutments [BDM Tables 6.5.1.1.1-1 and 6.5.1.1.1-2], strip seals will have more limited use than in the past.

Table 5.8.3.2.1-1. Approximate maximum allowable expansion lengths for approved strip seals

Seal type, steel (S) or concrete (C) super-structure	Max. gland installation temp. F (2)	Min. install width, inches	Approximate maximum allowable expansion length in feet for skew in degrees						
			0	10	20	30	40	50	60
Wabo SE-300, S	60	1.5	225	220	225	260	260	145	---
Wabo SE-300, C	60	1.5	220	215	220	255	255	140	---
Wabo SE-400 (1), S	70	1.5	335	340	355	345	235	45	---
Wabo SE-400 (1), C	60	1.5	370	375	395	380	255	50	---
Wabo SE-500, S	65	2.0	425	--- (3)	--- (3)	--- (3)	--- (3)	--- (3)	--- (3)
Wabo SE-500, C	60	2.0	445	--- (3)	--- (3)	--- (3)	--- (3)	--- (3)	--- (3)
D.S. Brown A2R-400 (1), S	60	2.0	295	300	265	160	115	55	---
D.S. Brown A2R-400 (1), C	60	2.0	295	300	260	160	115	55	---

Table notes:

(1) Joint settings and maximum gland installation temperature will need to be specified separately for each product, if both the Wabo and D.S. Brown products are adequate for the joint. See Example 2 in the commentary for this article.

(2) Allowable expansion length will be less than the table value if maximum gland installation temperature is above this temperature.

(3) No data on movement capacity is available for this gland.

Joint design shall be based on the thermal and shrinkage values given in Table 5.8.3.1.2 and the strip seal data in Table 5.8.3.2.1-2. There are four conditions that need to be considered during design:

- Long-term movement capacity parallel with centerline of roadway including shrinkage if applicable,
- Long-term maximum opening at minimum deck temperature after shrinkage,
- Short-term minimum opening at maximum deck temperature before shrinkage, and
- Manufacturer's minimum installation width, which will determine the maximum gland installation temperature.

The long-term joint movement considering both temperature and shrinkage shall meet the allowable long-term movement capacities given in Table 5.8.3.2.1-2. If possible, the designer should choose a strip seal from each approved manufacturer so that there is competition during the bidding process.

Table 5.8.3.2.1-2. Allowable movement capacity, minimum installation width, and minimum opening width for approved strip seals

Seal type/steel extrusion type	Minimum installation width, inches (1)	Minimum opening width, inches (1)	Allowable movement capacity parallel with centerline of roadway in inches (2) for skew angle in degrees						
			0	10	20	30	40	50	60
Wabo SE-300/A	1.5	0	3.0	3.0	3.1	3.5	3.7	3.3	2.8
Wabo SE-400/A	1.5	0	4.0	4.1	4.3	4.3	3.7	2.7	2.6
Wabo SE-500/A	2.0	0	5.0	--- (3)	--- (3)	--- (3)	--- (3)	--- (3)	--- (3)
D.S. Brown A2R-400/ SSA2	2.0	0.5	4.0	4.1	3.9	3.4	3.4	3.5	3.3

Table notes:

(1) This dimension is measured perpendicular to the joint.

(2) In 1980 the Michigan DOT determined allowable capacities and published them in *Determination of Allowable Movement Ratings for Various Proprietary Bridge Deck Expansion Joint Devices at Various Skew Angles, Final Report* [BDM 5.8.3.1.5]. Recently the Michigan DOT has updated the capacities in Special Provision – Frequently Used 03SP706(A), "Special Provision for Expansion Joint Device," 06-24-04.

(3) No data is available.

AASHTO-LRFD 14.5.3.2 limits the maximum single gap opening in the roadway surface to 4.0-inches in the direction of travel. Strip seal designs may be designed based on the limits given in Table 5.8.3.2.1-2 even though some designs may exceed the 4.0-inch limit given in AASHTO. Approval of the supervising Unit Leader is required for strip seals designed for longitudinal bridge deck movements greater than those given in Table 5.8.3.2.1-2.

The designer shall select a maximum installation temperature in the range of 60 to 90 degrees Fahrenheit at which to provide the minimum installation width listed in Table 5.8.3.2.1-2 for each acceptable strip seal. A higher temperature will allow more construction flexibility, but a lower temperature will allow a greater expansion length. With the addition of the bid item “Neoprene Gland Installation and Testing” the contractor has a reasonable option to return to the otherwise completed bridge during cooler temperatures, install the gland, and test the installation for leaks.

Based on the maximum installation temperature and minimum installation width for each acceptable strip seal it will be possible to determine the long-term maximum opening and the short-term minimum opening. The designer shall check the computed openings with the appropriate allowable values in Table 5.8.3.2.1-2.

The designer shall determine and specify the joint settings at 90, 50, and 10 degrees Fahrenheit for each acceptable strip seal [BSB SS 1026s1].

The overall design process for strip seals is shown in two examples in the commentary for this article.

5.8.3.2.2 Detailing

Two standard sheets provide typical details [BSB SS 1026s1] and notes [BSB SS 1026s2] for strip seal installations. The designer should note that the installation requires the following:

- Rails recessed below the surface of the deck,
- A rail anchorage system at 18 inches, maximum,

- Upturned strip seal rails at barrier rails,
- Removable cover plates at barrier rails, detailed so that traffic passes the attached ends first and in passing cannot snag the sliding ends, and
- Watertight integrity testing.

The designer needs to provide the following on the plans:

- Joint settings at 90, 50, and 10 degrees Fahrenheit for each acceptable strip seal, and
- Maximum deck temperature at which the strip seal gland may be installed.

By default, the bid item estimate reference note for steel extrusions explicitly excludes D.S. Brown from consideration. Including this default language is intended to ensure contractors do not consider D.S. Brown as an approved equal when the designer specifically excludes D.S. Brown from the table of approved expansion devices on BSB SS 1026a1. Designers must remove this portion of the estimate reference note if they include D.S. Brown as an option in the table of approved expansion devices on BSB SS 1026a1.

5.8.3.3 Finger joints

Finger joints generally are used for expansion joints larger than those that can be accommodated by strip seals. Approval of the supervising Unit Leader is required for finger joints designed for longitudinal bridge deck movements greater than 10 inches.

5.8.3.3.1 Analysis and design

[AASHTO-LRFD 3.4.1, 3.6.1.2.5, 3.6.2.1, 14.5.3.2]

Align the teeth with respect to the direction of movement. Typically, the alignment will be in the longitudinal direction of the bridge, unless the structure is on a horizontally curved alignment.

As noted in Figure 5.8.3.3.1, for either option the minimum joint opening (at maximum design temperature) in the longitudinal direction is 1.0 inch for steel superstructures [AASHTO-LRFD 14.5.3.2]. For concrete superstructures the minimum joint opening may be less to account for creep and shrinkage, but not less than 0.5 inches.

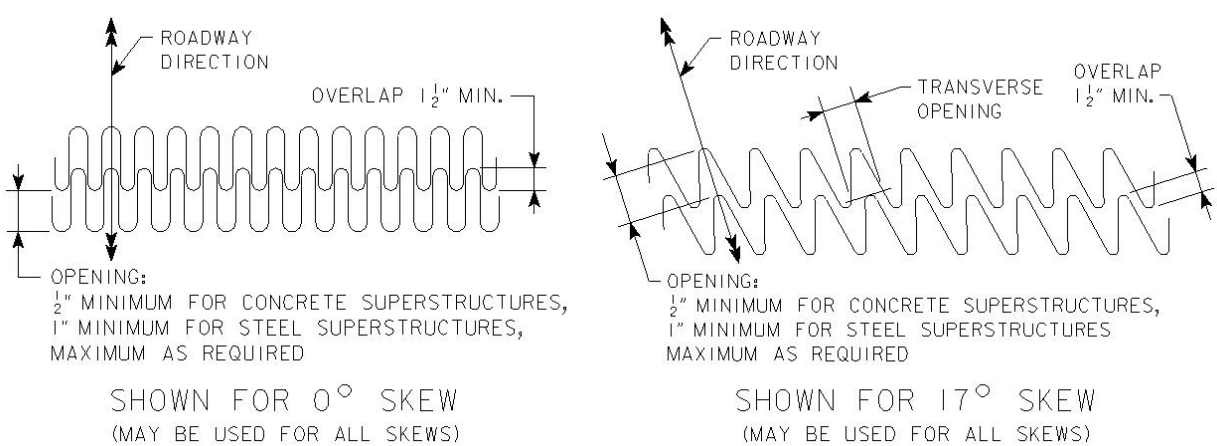

Figure 5.8.3.3.1. Finger joint opening limits

As noted in Figure 5.8.3.3.1, for either option there shall be at least 1.5 inches of tooth overlap in the longitudinal direction at maximum joint opening (at minimum design temperature) in the strength limit state [AASHTO-LRFD 14.5.3.2].

Limit finger joint surface openings to permit safe operation of motorcycles. When the maximum longitudinal opening in the direction of traffic exceeds 8 inches, the transverse opening shall not exceed 2 inches. For longitudinal openings 8 inches or less, the transverse opening may be increased to 3 inches [AASHTO-LRFD 14.5.3.2].

The top of the expansion device is to be parallel to profile grade, and the end of each tooth is to be beveled at a 1 vertical to 12 horizontal slope over the end 3 inches. Maintain at least a 0.25-inch gap between adjacent fingers.

A finger joint tooth shall be designed as a cantilever beam for the larger factored stress resulting from the load per tooth, P, applied as follows:

- P at 3 inches from the end of the tooth, or
- P/2 at 1.5 inches from the end of the tooth.

$$P = \frac{W}{N}$$

Where:

P = the load per tooth, k

W = the wheel load with dynamic load allowance = (16 kips)*(1.75) = 28.0 kips [AASHTO-LRFD 3.6.2.1]

N = the number of teeth per wheel width
Note: Take wheel width as 20 inches [AASHTO-LRFD 3.6.1.2.5].
Count teeth on only one side of the joint.

At the Strength I limit state, a load factor of 1.75 shall be applied to the tooth load [AASHTO-LRFD 3.4.1]. The designer then shall check the factored maximum cantilever tooth stress against the factored tooth yield stress.

Tooth thickness shall not exceed 3 inches. If necessary the designer may either use stiffeners to support the fingers (as for the Saylorville Reservoir Bridge on Iowa Highway 415) or let the fingers bear on a support beam (as for the Iowa-Illinois Memorial Bridge on I-74 over the Mississippi River). For example details consult the plans for the appropriate bridge.

To accommodate bicycle traffic, use special floor plates in the shoulder area [AASHTO-LRFD 14.5.3.2].

The designer shall determine and specify the joint settings at 90, 50, and 10 degrees Fahrenheit for each finger joint assembly.

Because finger joints are open joints, elastomeric drainage troughs are required to prevent deicing chemicals and debris from spilling onto the ends of the beams, bearings, and substructure components. Locations of drainage outlets need to meet criteria for deck drains.

5.8.3.3.2 Detailing

[AASHTO-LRFD 14.5.3.5]

All finger joint parts except trough hardware shall be galvanized.

Curb plates and barrier plate boxes at ends of finger joints shall not be shop welded to the finger joint assembly but shall be kept separate. After the deck is finished the plates and boxes shall be field welded in place and the galvanizing repaired by an approved method [CMB IM 410].

Give special attention to details of the finger joint anchorage system. For steel superstructures the joints should be rigidly connected to the stringers or girders.

The finger joint assembly should contain a galvanized shim plate pack to allow for field adjustment of the top of the finger joint at connections to all girders. The shim plate pack should be comprised of ¼-inch and 1/8-inch plates that allow for a minimum adjustment range of +/- ½-inch. The allowable adjustment range should be coordinated with the allowable haunch adjustments shown in the beam line haunch details.

Finger plate armor should be pierced with ¾ inch diameter vertical vent holes spaced not more than 18 inches on center in order to expel entrapped air. In lieu of hand packing of concrete under the armor per AASHTO-LRFD C14.5.3.5, the plans shall include CADD Note E910 which states that concrete shall be forced under and around the finger plate hardware. The note also requires localized internal vibration to consolidate the concrete.

For elastomeric drainage troughs, three aspects are of primary concern: sheet type, elastomer, and trough details. Sheet types should be low durometer (50 to 60) and synthetic fabric reinforced. Minimum thickness of the side curtains and the reinforced neoprene trough should be 1/4" [CMB IM 494].

To specify the elastomer, place the following standard note on the plans [CMB IM 494]:

> The elastomer compound for trough and curtains shall be in accordance with Table 4195.02-2 of Article 4195.02 of the Standard Specifications, except the tensile strength shall be 1500 psi minimum or it shall be Ethylene Propylene Diene Monomer (EPDM) (ASTM D 2000, Line call outs 3BA, 515, A14, B13, F17, C12, and K21).

Generally, the elastomeric drainage trough should be detailed as in Figure 5.8.3.3.2.

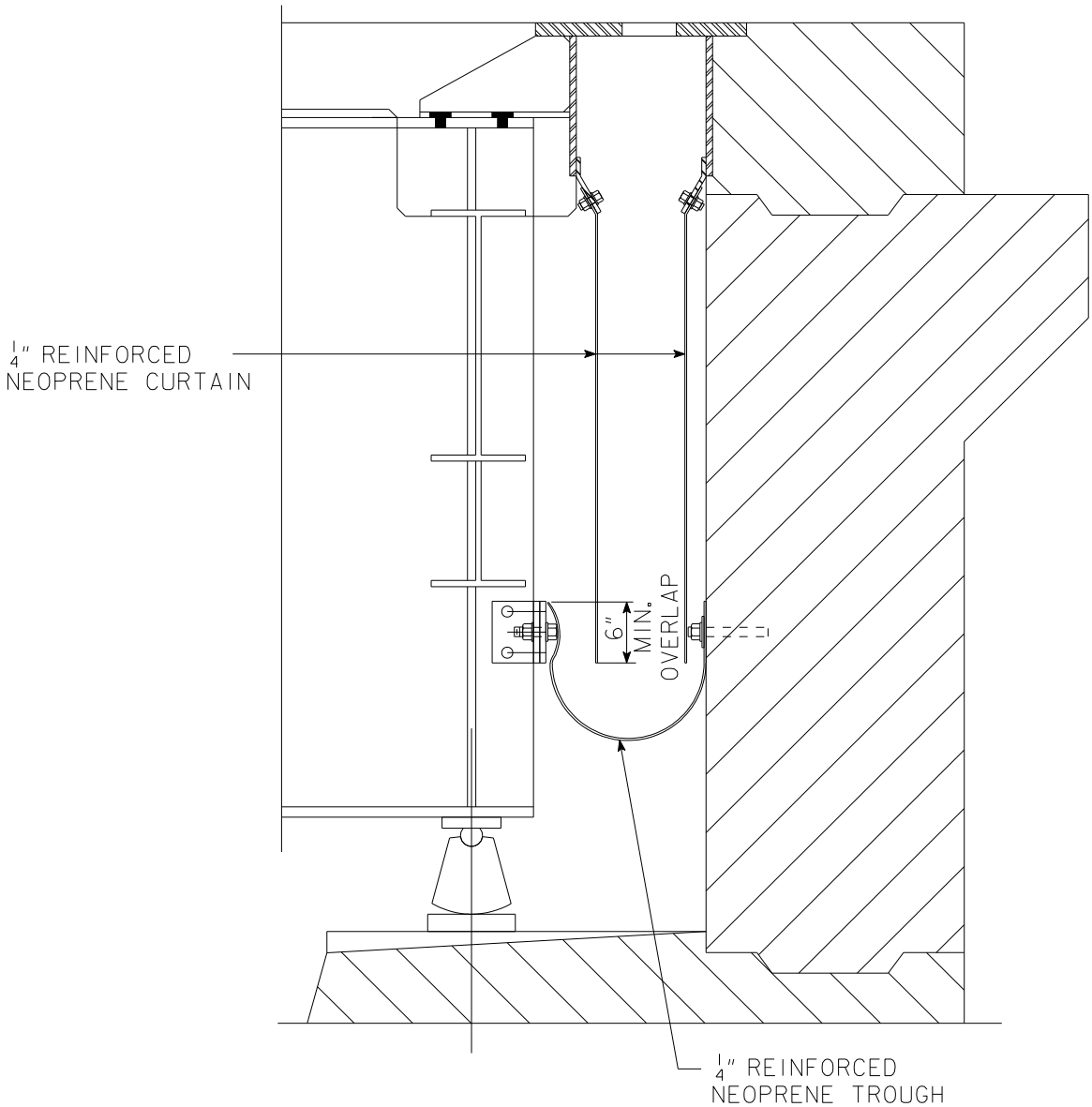

Figure notes:

- The toothed plates should be recessed ¼ inch below the deck surface as noted below.
- Although no shims are shown, a shim plate pack typically will be provided to adjust the elevation of the finger joint assembly with respect to the top flanges of the girders.

Figure 5.8.3.3.2. Finger joint with elastomeric drainage trough

To limit the possibility of debris accumulation, a minimum slope of 8% is required for the drainage trough. Drainage outlets should be at the gutter lines. Drainage troughs should be continuous full width of the bridge including curb and parapet area when the joint is over a pier or at an abutment and elsewhere where a closed drainage system is required. Keep the drainage trough continuous the full width of the bridge, where possible. If not, check with the supervising Unit Leader. If splicing of the elastomeric sheet side curtains is necessary, a minimum splice length (overlap) of 2 feet is recommended, overlap of the upstream sheet shall be on the inside relative to the downstream sheet.

The finished joint should be recessed ¼ inch to avoid damage by traffic or snow removal equipment.

All hardware, including bolts, studs, washers and concrete anchors, used to attach the trough shall be stainless steel. The trough should be attached in a secure manner with a minimum of 5/8 inch diameter bolts at 18 inch centers.

5.8.3.4 Tire buffing joints

5.8.3.4.1 Analysis and design

Typical integral abutments designed by the Bureau are intended to move with respect to the approach pavement. Consequently, there is need for an expansion joint between an integral abutment and portland cement concrete (PCC) approach pavement. The BE expansion joint used at an integral abutment [DB SRP BR series] includes a fill of tire buffings capped with a backer rod and a poured sealer. The list of approved sealers is included on the BR sheets. The BE joint size is 2 inches perpendicular to the abutment for setting temperatures between 40° and 80°F. The BE joint size and setting temperature applies to all integral abutment bridges meeting the requirements found in BDM 6.5.1.1.1. See BDM C5.8.3.4.1 for supporting calculations.

Reinforced approach slabs with the BE tire buffing joints should be included with all integral abutment bridge projects. In some cases, the first panel of the reinforced approach slab is tied to the abutment paving notch with stainless steel dowels [DB SRP BR-205 for CCS bridges]. As such, the approach slab moves with the bridge and the BE expansion joint is placed between the far end of the approach slab and a stationary sleeper slab. New bridges with semi-integral abutments often use tied approach slabs as well.

5.8.3.4.2 Detailing

See the Design Bureau plan for details of the tire buffing joint [DB SRP BR series].

5.8.3.5 Other joints

Reserved

C5.8.3 Expansion joints

C5.8.3.1.2 Design information

Iowa State University research on strip seal performance [BDM 5.8.3.1.5] has indicated that the AASHTO Procedure A cold climate temperature range [AASHTO-LRFD 3.12.2.1] generally is correct for steel but unconservative for concrete superstructures. The research also showed that the thermal coefficient for steel superstructures (0.0000065/ °F) in the AASHTO Standard Specifications [10.2.2] generally is correct, the Bureau shrinkage coefficient for concrete superstructures (0.0002 in/in) is reasonable but difficult to verify, and the thermal coefficient for concrete superstructures (0.000006/ °F) in the AASHTO Standard Specifications [8.5.3] is conservative. Based on the research and long-term experience with expansion joints, the Bureau policy is to use the temperature ranges and coefficients in Table 5.8.3.1.2 to determine movements for deck expansion joints.

Iowa State University produced a 2019 research report regarding expansion limits of D.S. Brown seal types A2R-400 and A2R-XTRA with steel extrusion type SSA2. As a result of this research, BDM Tables 5.8.3.2.1-1 and 5.8.3.2.1-2 were updated for the A2R-400 seal in the July 2021 BDM release. The results for the A2R-XTRA were not included in the BDM release since the roadway surface gap for this 7.0-inch seal will greatly exceed the 4.0-inch single gap limit given in AASHTO-LRFD 14.5.3.2 (9th edition).

C5.8.3.2 Strip seals

C5.8.3.2.1 Analysis and design

These two examples illustrate how to select and specify strip seals. Example 1 is for a steel bridge with characteristics that permit use of only one manufacturer's seal. Example 2 is for a concrete bridge with characteristics that permit use of alternate seals, as preferred by the Bureau.

Example 1

Given: steel bridge, 420 feet long, 210-foot expansion length, 30-degree skew

Make preliminary selection.
For 30-degree skew, Table 5.8.3.2.1-1 lists maximum expansion length of 260 feet for Wabo SE-300 and 345 feet for Wabo SE-400. D.S. Brown A2R-400 is not acceptable. Try Wabo SE-300.

Check allowable movement capacity parallel with centerline of roadway for Wabo SE-300.
$(\Delta L)_{thermal} = \alpha\ L\ \Delta T = (0.0000065)(210)(12)(150) = 2.46$ inches
$(\Delta L)_{shrink} = k\ L = (0)(210)(12) = 0$ inches
$(\Delta L)_{total} = 2.46 + 0 = 2.46$ inches [< 3.5 inches from Table 5.8.3.2.1-2, OK]

Check long-term maximum joint opening. [Numerical subscripts refer to temperatures in degrees Fahrenheit. Shrinkage is zero and not shown.]
Try 1.5 inch at 90 °F joint setting for best installation options.
$\text{Width}_{-25} = \text{Setting}_{90} + (\Delta L)_{115} = 1.5 + (0.0000065)(210)(12)(115)(\cos 30) = 3.13$ inches [> 3 inches {minimum of seal size and (3.5)(cos 30) = 3.03 inches, Table 5.8.3.2.1-2}, NG]

Try 1.5 inch at 80 °F joint setting.
$\text{Width}_{-25} = \text{Setting}_{80} + (\Delta L)_{105} = 1.5 + (0.0000065)(210)(12)(105)(\cos 30) = 2.99$ inches [< 3 inches {minimum of seal size and (3.5)(cos 30) = 3.03 inches, Table 5.8.3.2.1-2}, OK]

Check short-term minimum joint opening.
$\text{Width}_{125} = \text{Setting}_{80} - (\Delta L)_{45} = 1.5 - (0.0000065)(210)(12)(45)(\cos 30) = 0.86$ inches [> 0 inches, Table 5.8.3.2.1-2, OK]

Determine joint settings for plans.
$\text{Setting}_{50} = \text{Setting}_{80} + (\Delta L)_{30} = 1.5 + (0.0000065)(210)(12)(30)(\cos 30) = 1.93$ inches

$(\Delta L)_{40} = \alpha\ L\ \Delta T = (0.0000065)(210)(12)(40)(\cos 30) = 0.57$ inches
$\text{Setting}_{10} = \text{Setting}_{50} + (\Delta L)_{40} = 1.93 + 0.57 = 2.50$ inches
$\text{Setting}_{90} = \text{Setting}_{50} - (\Delta L)_{40} = 1.93 - 0.57 = 1.36$ inches

Determine maximum gland installation temperature.
Maximum installation temperature is 80 °F from joint setting trial above.

Specify only one strip seal: Wabo SE-300 with joint settings of 1 3/8 inches at 90 °F, 1 15/16 inches at 50 °F, and 2 1/2 inches at 10 °F. Specify that maximum gland installation temperature is 80 °F.

(It would be conservative in this example to specify Wabo SE-400.)

Example 2

Given: Concrete bridge, 600 feet long, 300-foot expansion length, 10-degree skew

Make preliminary selection.
For 10-degree skew, Table 5.8.3.2.1-1 lists maximum expansion length of 375 feet for Wabo SE-400 and 300 feet for D.S. Brown A2R-400. Try Wabo SE-400, and then try D.S. Brown A2R-400.

Check allowable movement capacity parallel with centerline of roadway for Wabo SE-400.
$(\Delta L)_{thermal} = \alpha\ L\ \Delta T = (0.000006)(300)(12)(100) = 2.16$ inches
$(\Delta L)_{shrink} = k\ L = (0.0002)(300)(12) = 0.72$ inches
$(\Delta L)_{total} = 2.16 + 0.72 = 2.88$ inches [< 4.1 inches from Table 5.8.3.2.1-2, OK]

Check long-term maximum joint opening. [Numerical subscripts refer to temperatures in degrees Fahrenheit.]
Try 1.5 inch at 90 °F joint setting as best installation option.
$\text{Width}_0 = \text{Setting}_{90} + (\Delta L)_{90} + (\Delta L)_{shrink} = 1.5 + (0.000006)(300)(12)(90)(\cos 10) + (0.72)(\cos 10) = 4.12$ inches [> 4 inches {minimum of seal size and $(4.1)(\cos 10) = 4.04$ inches, Table 5.8.3.2.1-2}, NG]

Try 1.5 inch at 80 °F joint setting.
$\text{Width}_0 = \text{Setting}_{80} + (\Delta L)_{80} + (\Delta L)_{shrink} = 1.5 + (0.000006)(300)(12)(80)(\cos 10) + (0.72)(\cos 10) = 3.91$ inches [< 4 inches {minimum of seal size and $(4.1)(\cos 10) = 4.04$ inches, Table 5.8.3.2.1-2}, OK]

Check short-term minimum joint opening.
$\text{Width}_{100} = \text{Setting}_{80} - (\Delta L)_{20} = 1.5 - (0.000006)(300)(12)(20)(\cos 10) = 1.07$ inches [> 0 inches, Table 5.8.3.2.1-2, OK]

Determine joint settings for plans.
$\text{Setting}_{50} = \text{Setting}_{80} + (\Delta L)_{30} = 1.5 + (0.000006)(300)(12)(30)(\cos 10) = 2.14$ inches
$(\Delta L)_{40} = \alpha\ L\ \Delta T = (0.000006)(300)(12)(40)(\cos 10) = 0.85$ inches
$\text{Setting}_{10} = \text{Setting}_{50} + (\Delta L)_{40} = 2.14 + 0.85 = 2.99$ inches
$\text{Setting}_{90} = \text{Setting}_{50} - (\Delta L)_{40} = 2.14 - 0.85 = 1.29$ inches

Determine maximum gland installation temperature.
Maximum installation temperature is 80 °F from joint setting trial above.

Try D.S. Brown A2R-400.

Allowable movement capacity check will be the same as for the Wabo SE-400 seal.

Check long-term maximum joint opening.
Because Table 5.8.3.2.1-1 shows seal type to meet expansion length with no excess, try 2.0 inch at 60 °F joint setting.

$Width_0 = Setting_{60} + (\Delta L)_{60} + (\Delta L)_{shrink} = 2.0 + (0.000006)(300)(12)(60)(\cos 10) + (0.72)(\cos 10) = 3.99$ inches [< 4 inches {minimum of seal size and (4.1)(cos 10) = 4.04 inches, Table 5.8.3.2.1-2, OK]

Check short-term minimum joint opening.
$Width_{100} = Setting_{60} - (\Delta L)_{40} = 2.0 - (0.000006)(300)(12)(40)(\cos 10) = 1.15$ inches [> 0.5 inches, Table 5.8.3.2.1-2, OK]

Determine joint settings for plans.
$Setting_{50} = Setting_{60} + (\Delta L)_{10} = 2.0 + (0.000006)(300)(12)(10)(\cos 10) = 2.21$ inches
$(\Delta L)_{40} = \alpha\ L\ \Delta T = (0.000006)(300)(12)(40)(\cos 10) = 0.85$ inches
$Setting_{10} = Setting_{50} + (\Delta L)_{40} = 2.21 + 0.85 = 3.06$ inches
$Setting_{90} = Setting_{50} - (\Delta L)_{40} = 2.21 - 0.85 = 1.36$ inches

Determine maximum gland installation temperature.
Maximum installation temperature is 60 °F from joint setting trial above.

Specify two, alternate strip seals:

- Wabo SE-400 with joint settings (to nearest 1/16 inch): 1 5/16 inch at 90 °F, 2 1/8 at 50 °F, and 3 inches at 10 °F and maximum gland installation temperature of 80 °F and
- D.S. Brown A2R-400 with joint settings (to nearest 1/16 inch): 1 3/8 inch at 90 °F, 2 3/16 at 50 °F, and 3 1/16 inches at 10 °F and maximum gland installation temperature of 60 °F.

C5.8.3.3 Finger joints

C5.8.3.3.1 Analysis and design

2011 ~ Minimum Opening and Temperature Settings for Finger Joints

During the 1990s the Bureau summarized and organized memos and Bureau practice for an Electronic Manual. The minimum finger joint opening of 0.5 inch for the Electronic Manual was taken from page 28-122, Through Highway Spans, Design, in Robert W. Abbett's *American Civil Engineering Practice*. Article 14.5.3.2 in the current AASHTO LRFD Specifications (2010 Interim) requires a minimum transverse deck joint opening of 1.0 inches for steel superstructures designed for the appropriate strength load combination but allows for a reduced opening for concrete superstructures. To more closely align with the AASHTO specifications the Bureau increased the minimum joint opening for steel superstructures but is neglecting the AASHTO load factor or Iowa setting factor because finger joints are required with this change to be installed with adjustment for the installation temperature. The designer is required to include on the plans the finger joint settings at 90, 50, and 10 degrees Fahrenheit.

C5.8.3.3.2 Detailing

2011 ~ Assembly of Finger Joints

In recent years finger joints have been fabricated with curb plates or barrier plate boxes shop welded to the ends of finger joint assemblies. During construction the attached plates and boxes must be cut loose so that the contractor can properly finish the deck. To improve constructability the curb plates and barrier plate boxes should not be shop attached but should be kept separate. After deck finishing the plates and boxes should be field welded in place and the galvanizing repaired using an approved method.

2011 ~ Elevation Adjustment for Finger Joints

The finger joint assembly will require elevation adjustment in the field. The +/- ½-inch minimum adjustment given in the manual may not be sufficient for the design haunch condition and, in that case, the designer will need to allow for more adjustment, either with a larger shim pack or by some other means. In unusual cases all of the design planning for elevation adjustment will not be adequate, and special field details will be necessary.

C5.8.3.4 Tire buffing joints

C5.8.3.4.1 Analysis and design

The approved list of sealants for BE expansion joints include:

- Dow – Dowsil 902 RCS
- Sika – Sikasil 728 RCS
- Watson Bowman Acme – Wabo Silicone Seal
- Pecora – 322FC

These four sealants have a +100%/-50% movement range based on a maximum initial joint width of 3” to 3.25” (varies slightly between brands). Once the initial joint width exceeds 3” to 3.25” the movement range decreases to +50%/-50%.

Based on calculations and the desire to simplify BE joint installation it was decided that an initial gap of 2.00” perpendicular to the abutment with setting temperatures between 40° and 80°F was acceptable since it only results in acceptable minor violations of the following design parameters at extreme limits:

- Minimum joint opening perpendicular to the abutment of 0.125” to prevent concrete crushing. This criteria did not control for final design of the joint.
- Minimum joint opening perpendicular to the abutment of 1.00” based on sealant limit of -50% of 2.00” joint opening.
- Maximum joint opening longitudinal with c.l. roadway of 4.00” in accordance with AASHTO LRFD 14.5.3.2 and based on sealant limit of 100% of 2.00” joint opening.

<u>Supporting Calculations:</u>

575’ PPCB bridge on 0 deg skew with 40°F setting temperature and initial BE joint width of 2.00”

α = 0.0000060 in/in
ΔT = ±50° from 50°F (0 to 100°F)

Maximum Joint Width Parallel with Roadway at 0°F =
2.00” + (40°F - 0°F)*(0.0000060 in/in)*[(575’)*(12 in/ft)*(0.5)] = 2.828” ≤ 4.00” OK

Minimum Joint Width Perpendicular to Roadway at 100°F =
2.00” - (100°F - 40°F)*(0.0000060 in/in)*[(575’)*(12 in/ft)*(0.5)] = 0.758” ≥ 1.00” NG, but deemed acceptable

425’ PPCB bridge on 45 deg skew with 80°F setting temperature and initial BE joint width of 2.00”

α = 0.0000060 in/in
ΔT = ±50° from 50°F (0 to 100°F)

Maximum Joint Width Parallel with Roadway at 0°F =
[(2.00”)/(cos(45 deg))] + (80°F - 0°F)*(0.0000060 in/in)*[(425’)*(12 in/ft)*(0.5)] = 4.052” ≤ 4.00”
NG, but deemed acceptable

Minimum Joint Width Perpendicular to Roadway at 100°F =
{[(2.00”)/(cos(45 deg))] - (100°F - 80°F)*(0.0000060 in/in)*[(425’)*(12 in/ft)*(0.5)]}*(cos(45 deg)) = 1.784” ≥ 1.00” OK

400’ Steel Beam bridge on 0 deg skew with 40°F setting temperature and initial BE joint width of 2.00”

α = 0.0000065 in/in

ΔT = ±75° from 50°F (-25 to 125°F)

Maximum Joint Width Parallel with Roadway at -25°F =
2.00” + (40°F - (-25°F))*(0.0000065 in/in)*[(400’)*(12 in/ft)*(0.5)] = 3.014” ≤ 4.00” OK

Minimum Joint Width Perpendicular to Roadway at 125°F =
2.00” - (125°F - 40°F)*(0.0000065 in/in)*[(400’)*(12 in/ft)*(0.5)] = 0.674” ≥ 1.00” NG, but deemed acceptable

300’ Steel Beam bridge on 45 deg skew with 80°F setting temperature and initial BE joint width of 2.00”

α = 0.0000065 in/in
ΔT = ±75° from 50°F (-25 to 125°F)

Maximum Joint Width Parallel with Roadway at -25°F =
[(2.00”)/(cos(45 deg))] + (80°F - (-25°F))*(0.0000065 in/in)*[(300’)*(12 in/ft)*(0.5)] = 4.057” ≤ 4.00”
NG, but deemed acceptable

Minimum Joint Width Perpendicular to Roadway at 125°F =
{[(2.00”)/(cos(45 deg))] - (125°F - 80°F)*(0.0000065 in/in)*[(300’)*(12 in/ft)*(0.5)]}*(cos(45 deg)) = 1.628” ≥ 1.00” OK

TABLE OF CONTENTS ~ DECK DRAINS

5.8.4 Deck drains
5.8.4.1 General
5.8.4.1.1 Policy overview
5.8.4.1.2 Design information
5.8.4.1.3 Definitions
5.8.4.1.4 Abbreviations and notation
5.8.4.1.5 References
5.8.4.2 Edge drains
5.8.4.2.1 Analysis and design
5.8.4.2.2 Detailing

5.8.4 Deck drains

This article covers deck drains placed near the edge of a bridge deck at a railing or curb. The basis for the hydraulic analysis is the FHWA publications HEC-21 and HEC-22.

5.8.4.1 General

With minor modifications the design procedures and details described in this article meet AASHTO LRFD Specifications [AASHTO-LRFD 2.6.6 and 9.4.2]. In addition to the AASHTO sections listed above, the designer should review related articles in this manual for decks [BDM 5.2] and continuous concrete slabs (CCS) [BDM 5.6.1].

5.8.4.1.1 Policy overview

Deck drains are generally beneficial for roadway drainage performance. Two of the primary benefits of deck drains are the rapid removal of water from the bridge deck during lighter rains and removal of water from the deck during snowmelt to minimize refreezing. In addition, removal of deck drainage prior to the bridge end will reduce water damage attributed to leaky joints and undermining of bridge approaches. The intent is to handle the drainage incrementally in lieu of managing large amounts of water at the bridge ends.

Typically deck drains require routine maintenance and cleaning. Lack of maintenance due to limited resources greatly reduces their effectiveness and if improperly placed, discharge from deck drains can cause unintended damage. Careful overall design and planning (not limited to quantity and location) of deck drainage is vital for pond-free bridge decks. The need for deck drains should be based on engineering judgment along with bridge features, site constraints for water discharge, consideration of local maintenance practices, and hydraulic evaluation.

5.8.4.1.2 Design information

Reserved.

5.8.4.1.3 Definitions

Open system is a simple drain assembly with a minimum of piping that conducts drainage directly downward to below the bottom of the superstructure.

Closed system is a drain/piping assembly that conducts drainage horizontally to a pier or abutment where the drainage is directed to the ground or a storm sewer. The system typically consists of a drain grate, scupper, lengths of pipe, elbows, and cleanouts.

5.8.4.1.4 Abbreviations and notation

CCS, continuous concrete slab
CWPG, continuous welded plate girder
HEC-21, FHWA's Hydraulic Engineering Circular 21 [BDM 5.8.4.1.5]
HEC-22, FHWA's Hydraulic Engineering Circular 22 [BDM 5.8.4.1.5]
PPCB, pretensioned prestressed concrete beam
RSB, rolled steel beam

5.8.4.1.5 References

Brown, S.A., S.M. Stein, and J.C. Warner. *Urban Drainage Design Manual, Hydraulic Engineering Circular 22 (HEC-22), Second Edition.* Washington: Federal Highway Administration (FHWA), 2001. (Available on the FHWA web site at: http://www.fhwa.dot.gov/engineering/hydraulics/pubs/10009/10009.pdf)

Young, G.K., S.E. Walker, and F. Chang. *Design of Bridge Deck Drainage, Hydraulic Engineering Circular 21 (HEC-21).* Washington: Federal Highway Administration (FHWA), 1993. (Available on the FHWA web site at: http://www.fhwa.dot.gov/engineering/hydraulics/pubs/hec/hec21.pdf)

5.8.4.2 Edge drains

5.8.4.2.1 Analysis and design

The designer shall use the guidelines provided below for determining the deck drain design.

(1) Location guidelines

These location guidelines may be waived if they conflict with the restrictions of drain placement listed under (2). When the guidelines are waived, the designer shall confirm adequacy of deck drainage by hydraulic analysis as outlined in (4). The designer also may elect to reverse the process by beginning with a hydraulic analysis and adding additional drains as needed to meet the guidelines below.

- A minimum of one deck drain should be placed in each interior span and two deck drains in each end span. For normal crown situations the minimum number of drains should be placed along each edge of deck; for decks draining to one edge the minimum number of drains should be placed on the low edge only. Drain spacing should not exceed 50 feet for tube drains or 100 feet for scupper drains.

- Roadway profile grade is a factor in deciding the need for deck drains. Consider additional drains in situations with extremely flat grades (< 0.3%).

- For both structural and hydraulic reasons low points should be located off the bridge. However, if the design requires a low point on the bridge, place one drain at the low point and one flanking drain each way from the low point where the tangent to the gutter slope equals 0.3%, generally at 5 to 10 feet.

- For superelevated decks, place drains on the low side only.

- Take care to intercept gutter flow in horizontal curvature or superelevation transitions to assure that water does not flow across a bridge deck.

- Do not place drains at a high point on a crest of a curve. Place the first drain at a maximum of 50 feet each way from the crest.

- Place deck drains near and upslope, generally 10 to 15 feet, from bridge ends and interior expansion joints to intercept as much water as practical.

- Consult with the Design Bureau to avoid or minimize approach roadway drainage onto the bridge.

- For an open system, place drains at least 10 feet from centerline of pier to keep corrosive salt water off the pier. For bridges with free fall greater than 25 feet, consider increasing the distance to 20 feet to reduce the likelihood that discharge will be carried by the wind to substructure elements.

- It is acceptable to place an open system drain over macadam or erosion stone slope protection (refer to bridge standard sheets 1006C-1006E).

- Even if all the guidelines above are met there are unique situations when the adequacy of the bridge deck drain design should be confirmed by hydraulic analysis. Such situations include, but are not limited to, bridges with stub abutments, low points, superelevation or superelevation transition, or width greater than 60 feet.

(2) Location restrictions

Placement of open system deck drains is not allowed over the following site features:

- Traffic lanes and shoulders (existing and future)

- Sidewalks, bike trails, or shared use paths

- Concrete slope protection (potential undermining). However, placing drains over the toe of concrete slope protection is acceptable.

- Railroad right-of-way

- MSE or other retaining walls

- Levees or drainage toward a levee

(3) Type and size selection

Selection of the type and size of drain is required for hydraulic analysis. For typical bridges the Bureau selects from three types described below.

- Tube drains (open system): Tube drains are typically 4-inch x 8-inch galvanized tubes at the curb or barrier railing, either anchored at the deck [BSB SS 4380, 4383-4385] or anchored to the sides of steel girders [BSB SS 1059]. They are completely open (no grates), discharge directly downward, and are visible on the exterior to motorists passing under a bridge.

- Scupper drains (open system): This drain type is similar to a tube drain but has a drain trench or scupper in the deck that extends from the curb or barrier rail inward beyond the exterior beam or girder [BSB SS 1054]. The scupper has a deck grate and at the low end discharges into an 8-inch galvanized pipe that discharges directly downward. The scupper will interrupt deck reinforcement and will require special local reinforcement. Because these drains are intended to be essentially hidden to motorists passing under a bridge, they generally are termed aesthetic drains.

- Scupper drains (closed system): This drain type is a closed system consisting of a deck grate, scupper, and piping system to conduct the deck drainage to an abutment or pier where it can be discharged near ground level. The scupper usually will interrupt deck reinforcement

and may require special local reinforcement. A closed scupper drain/longitudinal piping system generally should be avoided and only considered in extreme conditions to address site constraints. Generally, the pipe should be a minimum of 8 inches in diameter, sloped at 8% or more, and provided with cleanouts. Before selecting this type the designer shall consult with the supervising Unit Leader.

(4) Hydraulic analysis guidelines

Per *Design of Bridge Deck Drainage, Hydraulic Engineering Circular 21* (HEC-21) [BDM 5.8.4.1.5], the hydraulic analysis is to be based on a 10-year, 5-minute rainfall design event and consideration of a 25-year, 5-minute check storm event.

The spread of water for the design storm event generally is limited to the width of the shoulder. If there is no shoulder present, part of a traffic lane may be used to carry runoff. For primary highways with a posted speed of less than 45 mph, a maximum encroachment for a two lane roadway is 3 feet onto the traveled lane. Where there are two or more adjacent lanes in a given direction, allowable encroachment is 6 feet onto the outside traveled lane in that direction. In a two lane urban section with curb and gutter, the spread of water should generally be limited to 7 feet from the bridge barrier. For multiple urban lanes or unusual sections, the designer should check with the Design Bureau to determine the allowable encroachment.

During the check storm event, it is desired to maintain at least one 12-foot lane width accessible to traffic.

For the preferred analysis method for both the design storm event and check storm event see the “Bridge Deck Drainage” document provided in the commentary [BDM C5.8.4.2.1].

5.8.4.2.2 Detailing

Drain tubes or pipes for an open system shall extend a minimum of 12 inches below the bottom beam flange, if practical, and the extension does not encroach on the vertical clearance envelope. For slab bridges drains shall extend 6 inches below the slab.

A tube drain for a PPCB or RSB bridge should be attached to deck forms with steel nailer angles and anchored in the deck with welded bars [BSB SS 4380, 4383-4385].

A tube drain outside the exterior girder of a CWPG bridge should be attached to the girder with two brackets, if the girder is more than 54 inches deep [BSB SS 1059]. A tube drain between girders should be attached as shown on the standard sheet [BSB SS 1059].

All parts of a tube drain, including bolts, anchors, attachments and tube shall be galvanized. Galvanizing may be according to ASTM A 53 or ASTM A 123. Since most drain tubes involve welding attachments to the tube, ASTM A 123 is typically the appropriate specification since the assembly should be hot dipped galvanized after welding. For steel bridges a tube drain also shall be painted over the galvanizing to match the color of the steel bridge [IDOT SS 2509].

All scupper drain grates are to have the grate bars perpendicular to the direction of traffic to improve safety for motorcycles and bicycles.

Consider a splash basin for open system drain discharge over an unpaved embankment or unprotected ground. See Design Bureau’s rock splash basin detail [DB SRP EC-301 Type 4].

C5.8.4 Deck drains

C5.8.4.2 Edge drains

C5.8.4.2.1 Analysis and design

The following is the "Bridge Deck Drainage" document referred to in the manual [BDM 5.8.4.2.1].

Bridge Deck Drainage

Objectives:

- Control spread and depth of water to maintain tire traction.
- Provide drains that function properly with adequate maintenance.
- Preserve structural integrity and aesthetics of the bridge.

Background:

HEC-21 and HEC-22: These abbreviations refer to FHWA Hydraulic Engineering Circulars that are the basis for deck drain design [BDM 5.8.4.1.5].

Design criteria: The primary reason for a good bridge deck drainage design is to provide for safe passage of vehicles during the design storm event. As spread of water from the curb increases, the risks of traffic accidents and delays, and the nuisance and possible hazard to pedestrian traffic increases. When rain falls on a sloped pavement surface, it forms a thin film of water that increases in thickness as it flows to the edge of the pavement. Factors which influence the depth of water on the pavement are the length of the flow path, surface texture, surface slope, and rainfall intensity. If sheet flow or spread is of sufficient depth, a tire can separate from the pavement surface. This is known as hydroplaning. As the depth of water increases, the potential for vehicular hydroplaning increases. If the spread of water encroaches onto the traffic lane, the traffic may slow and cause a disruption in flow. The use of drainage structures along the roadway to capture the flow of water will reduce the depth and spread of the water.

The Bridge Deck Drainage Design spreadsheet available in the Bureau in the LRFD Bridge Design Applications folder and on the Bridges and Structures Bureau web site calculates the spread of water based on the individual characteristics of the bridge. The depth and spread of water are interrelated, as depth is a function of the spread and cross slope. The spread of water is used as the limiting factor since it is an easier value to calculate and understand. The spread of water from the design storm is generally limited to the width of the shoulder, as flow in the traveled road would create traffic hazards. Where a shoulder is provided, water should be carried entirely on the shoulder except in the unusual cases where a part of the traffic lane can be used in addition to the shoulder.

The spreadsheet is intended for use with the Iowa DOT standard tube drain [BDM 5.8.4.2.1 and BSB SS 1059, 4380, and 4383-4385]. The spreadsheet can also be used for other curb opening drains providing initial parameters are changed. For drains with a different overall design, consult the manufacturer's information for additional information, as the efficiency of the drain will be required in the spreadsheet.

Rainfall design criteria for design and check storms are contained in Table 1 and are intended for use throughout the State of Iowa for bridge deck drain design. For a check storm (larger rainfall event) at least one width of traveled lane should still be accessible to traffic during the event. (This could be one-half lane on each side of the bridge, for a total of one lane width). The design criteria for deck drains give the maximum allowable encroachment or spread of water on the deck for a particular storm. A considerable amount of water will still be flowing off the end of the bridge, and end drains will be required.

Table 1. Bridge Deck Drain Rainfall Criteria

Criterion	Item	Design Storm	Check Storm
Rainfall Intensity		8 in/hr(1)	9.6 in/hr
Time of Concentration		5 min.	5 min.
Duration		5 min.	5 min.
Frequency		10 yrs.	25 yrs.

Table note:

(1) Rainfall intensity for a 10 yr. frequency, 5-minute duration storm, varies throughout the state of Iowa. We are using an 8 in/hr rainfall intensity for bridge deck drains throughout the state of Iowa. This variable can be changed in the spreadsheet if determined to be necessary by the engineer. A table of rainfall intensities for the State of Iowa can be found in the Design Bureau's Design Manual [DB DM 4A-5, Table 2].

The design computations in the spreadsheet were established using the Federal Highway Administration's Hydraulic Engineering Circulars, HEC-21 and HEC-22 [BDM 5.8.4.1.5]. For more detailed information regarding these topics, refer to these manuals.

End Drains: Bridge deck drainage is often less efficient than roadway sections because cross slopes are flatter and drainage inlets or scuppers are less hydraulically efficient and more easily clogged by debris. Because of the difficulties in providing for and maintaining adequate deck drainage systems, gutter flow from the roadway should be intercepted before it reaches a bridge. (For similar reasons, zero gradients and sag vertical curves should be avoided on bridges.) Runoff from bridges should be collected immediately after it flows onto the subsequent roadway section where larger grates and inlet structures can be used. Bridge end drains are usually placed at the time the bridge approach is paved, so the need for them should be discussed with the Design Bureau. The drain located at the end of a bridge is generally designed to handle all of the flows coming from the bridge, under the assumption that all deck drains are clogged. It may be necessary to provide a temporary bridge end drain during the period of time between bridge construction and the bridge approach paving. This is extremely important when the fill material is very erosive. Chapter 7 in HEC-21 details bridge end drain design.

Debris: Problems with clogging are largely local since the amount of debris varies significantly from one area to another. Partial clogging of inlets on grade rarely causes major problems. Thus, localities need not make allowances for reduction in inlet interception capacity unless local experience indicates such an allowance is advisable. There is an input box in the spreadsheet to change this variable if deemed necessary. Unless there is a known problem with debris, such as in a heavily wooded area, this value should remain at 100%.

Snow and corrosives: Water may freeze or fall as snow, making roadways slick and plugging drains. Rain may also pick up corrosive contaminants, which if allowed to come into contact with structural members, may cause deterioration. Uncontrolled water can cause serious erosion of embankment slopes and even settlement of pavement slabs. The rain that falls on a structure may cause stains and discoloration on exposed faces if it is not collected and disposed of properly. Deck drains should prevent water, road salt, and other corrosives from contacting the structural components. The primary advantage of the standard tube drains is the removal of water from the bridge during lighter rains and for the removal of water from snowmelt. Proper designs and procedures can ensure that drains are working and bridge decks are free of standing water. Proper design provides benefits related to traffic safety, maintenance, structural integrity, and aesthetics.

Downspouts: Pipes hanging on a bridge lack aesthetic appeal, however pipes buried in concrete or concealed within a structure present maintenance challenges. A designer is cautioned against placing the drainage system within the superstructure. Drain pipes should not be installed through box girders. In most cases, the pipe leaks, freezes, and damages the box girder. Downspouts should, as a minimum, be 6 to 8 inches in diameter, with 8 inches preferred. For details which are more complex than a free fall situation, see pages 33-36 in HEC-21.

Design Steps: The design of the drainage system involves three basic steps. First, determine drain locations in accordance with location guidelines and restrictions [BDM 5.8.4.2.1]. Then, choose the type of drain. The choice of the type of drain will nearly always be the standard tube drain. If a different drain type is chosen, the dimensions and/or efficiency values of the drain will need to be changed in the spreadsheet. Finally, choose the spacing for the bridge deck drains. The next sections discuss the procedure in detail. The first section addresses the variables considered in design. The second section details the design procedure. The last section then addresses inlets with a sag condition.

In conclusion, effective bridge deck drainage is important for the following reasons: hydroplaning often occurs at shallower depths on bridges due to the reduced surface texture of concrete bridge decks, moisture on bridge decks freezes before surface roadways, and deck structural and reinforcing steel is susceptible to corrosion from deicing salts. Therefore, the engineer must develop solutions that control the spread of water into traffic lanes, control the depth of water available to reduce traction, do not interfere with the architectural beauty or structural integrity of the bridge, and function properly with adequate maintenance.

Hydraulic Analysis

All references and equations are from HEC-22 unless otherwise noted. Equation, chart, and page numbers are given in parentheses, i.e. (Eq. 4-2).

Definition of Variables:

Constants Used in Equations:

Rainfall Parameters (these values are typical and may be changed in special situations):

Run-off Coefficient, $C = 0.9$

Manning's Coefficient, $n = 0.016$

Rainfall Intensity, $i = 8$ in./hr.

Equation Constants:

$K_m = 0.56$ (Eq. 4-2)

$K_v = 2*K_m = 1.12$ (Eq. 4-13, Chart 4B)

$K_f = 0.09$ (Eq. 4-18)

$K_s = 0.15$ (Eq. 4-19)

Weir Coefficient, C_w = 3.0, for rectangular opening (Eq. 4-26)
= 2.3, for depressed curb (Eq. 4-28)
= 3.0, for non-depressed curb (Eq. 4-30)

Orifice Coefficient, C_O = 0.60, for circular opening (Pg. 8-21)
= 0.67, for rectangular (grate or curb) opening (Eq. 4-27)

Acceleration of Gravity, $g = 32.2$ ft/s^2

Area Constant (for unit conversion), $A_{constant}$ = 43,560

Values Specific to Project:

Width of Area Being Drained, W_p = typically width from crown to gutter [1]

Allowable Width of Spread, T_{all} = typically shoulder only [2]

Cross Slope, S_x = typically 2 % [3]

Longitudinal Slope, S_L = Profile Slope at location of drain [3]

Cross Slope at Intake, S_w = $S_x + a/W$ (to be conservative, a=0 and thus $S_w = S_x$)

Efficiency of drain due to debris, E_{deb} = typically 100 % [4]

1. W_p should include the entire area contributing to the drain, usually the width from the crown to the edge of the road. The width of sidewalks draining onto the deck should also be included. On superelevated decks, the entire deck width drains to one side; inlets are only needed on the low side of the bridge.

2. T_{all} is typically the width of the shoulder (from the edge of the traveled way to the edge of the road). See the Bridge Design Manual for more guidance and T_{all} values for various situations.

3. The spreadsheet will automatically calculate the S_L at the location of interest. If for some reason the user cannot calculate S_L, or if S_X varies over the area of interest, the smallest (and therefore most conservative) slope should be used. To avoid errors, slopes should be taken as no smaller than 0.3%.

4. In areas where debris and clogging will typically be a problem, this can be reduced to better reflect the efficiency of the inlet. A heavily wooded area is an example of where the efficiency may be reduced.

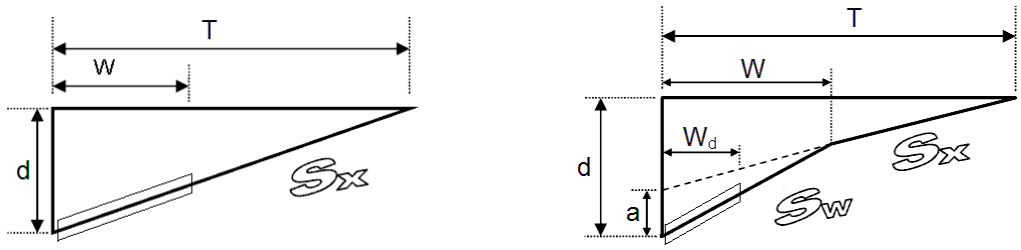

Figure 1: Gutter Cross Sections

Iowa DOT Drain Dimensions:

	Standard Tube Drain BSB SS 4380, 1059	Aesthetic Deck Drain BSB SS 1054
Length of Drain Opening,	L = 0.625 ft.	L = 0.75 ft.
Width of Drain,	W_d = 0.2917 ft.	W_d = 4.0 ft.
Depth of Gutter Depression,	a= 1.0 in.	a = 0.0 in.
Width of Depression,	W = 1.0 ft.	W = 4.0 ft.
Perimeter of Drain Opening,	P = 1.208 ft.	P = 8.75 ft.
Clear Area of Grate Opening,	A_{clear} = 100% * W_d * L = 0.1823 sq. ft.= 2.700 sq. ft.	A_{clear} = 90% * W_d * L
Area of Downspout Opening,	A_O = 0.1823 sq. ft.	A_O = 0.1636 sq. ft.
Depth of Drain Box,	d = 0.0 in.	d = 6.5 in.
Splash-over Velocity,	V_0 = 4.5 ft/s *P-1-7/8 grate*	V_0 = 1.9 ft/s *Reticuline grate* (Chart 5B)

The Tube Drain is conservatively modeled as a Parallel Grate, P-1-7/8 (in most situations, all frontal flow will be intercepted). The Aesthetic Deck Drain is modeled as a Reticuline Grate.

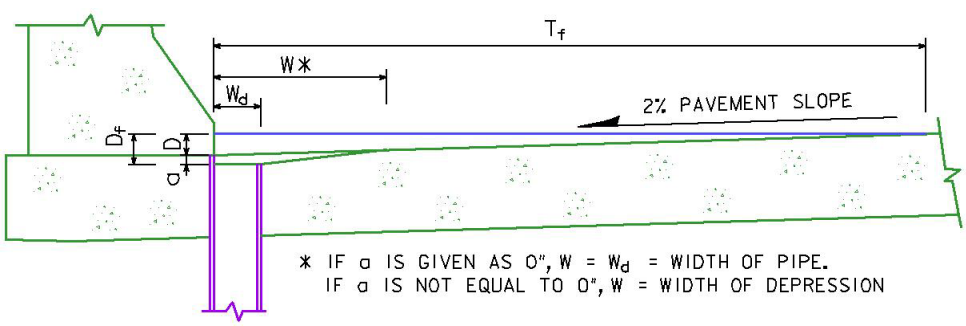

Figure 2: Layout of Standard Inlet, BSB SS 4380 Series

Layout of standard inlet drain SS 4380 series.

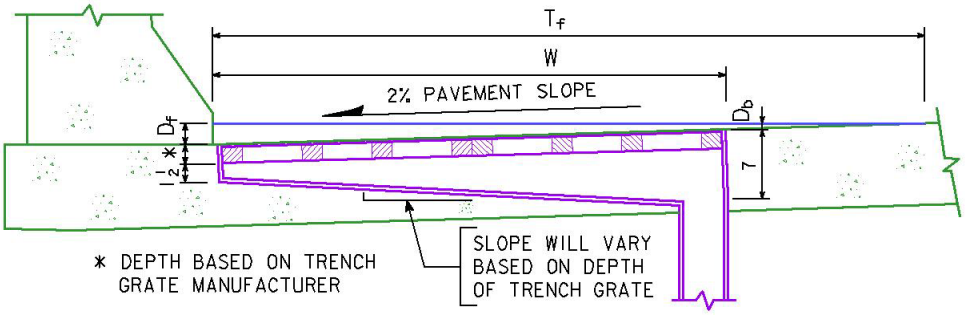

Figure 3: Layout of Aesthetic Deck Drain, BSB SS 1054

Vertical Profile:

Vertical Point of Intersection, VPI = ##+##.#
Vertical Point of Curvature, VPC = ##+##.# (calculated by spreadsheet)
Vertical Point of Tangency, VPT = ##+##.# (calculated by spreadsheet)

Length of Vertical Curve, L of VC = # ft. or m
Elevation, e = #.## ft. or m

Station at Start of Bridge, StaSB = ##+##.#
Station at End of Bridge, StaEB = ##+##.#

Grade, G_1 or G_2 = # % (calculated by spreadsheet)

For a bridge on a vertical tangent, two VPIs must be known in order to determine g_1. For a bridge on a vertical curve, three VPIs and the L of VC must be known in order to determine g_1, g_2, VPC and VPT. The spreadsheet will calculate these values and S_L for any point along the vertical profile. For more information on vertical curve calculations, see the Design Bureau's Design Manual, Sec. 2B-01.

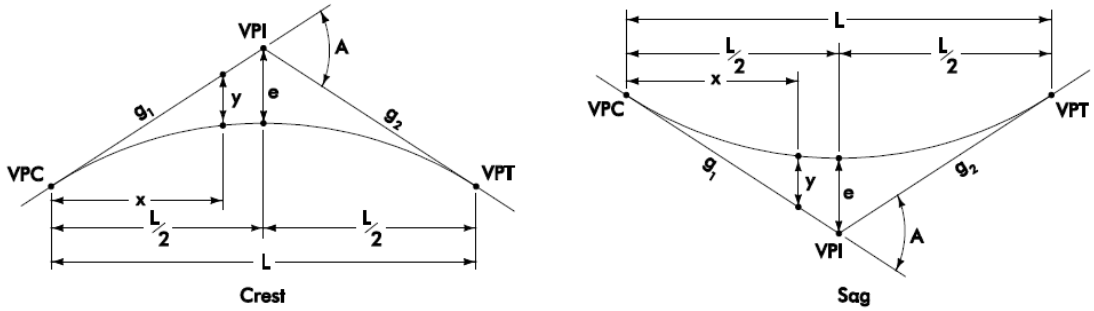

Figure 4: Symmetrical Vertical Curves

Drainage Equations:

Note: Take care to convert "a" and "d" values (given in inches or millimeters) to appropriate primary unit (feet or meters) for use in equations. Conversions are not shown in following equations. The spreadsheet will make appropriate conversions.

Description	Equation	HEC-22 Reference
$Q_t = Q_{total}$ Total discharge an area	$Q_{total} = Q_t = \frac{C*i*A}{A_{constant}} + Q_{bypass}$	
T_f Width of Flow. Only valid for T over constant S_x.	$T_f = \left[\frac{Q_t*n}{K_m S_x^{5/3} S_L^{0.5}}\right]^{0.375}$	Eq. 4-2
D_f Depth of Flow, At Edge of Gutter	$D_f = T_f * S_x + a$	
D_b Depth of Flow, At Edge of Scupper	$D_b = D_f - W_d * S_w$	
D_s Depth of Flow, At Edge of Depression	$D_s = (T_f - W) * S_x = D_f - W * S_w$	
$Q_f = Q_t$ Quantity of Flow. Only valid for Q over constant S_x.	$Q_f = \frac{K_m}{n} S_L^{0.5} S_x^{5/3} T_f^{8/3}$ $Q_f = \frac{K_m}{n*S_x} S_L^{0.5} D_f^{8/3}$	Eq. 4-2
Q_s Quantity of Side Flow above Scupper	$Q_s = Q_t * (1 - E_0)$ $Q_s = \frac{K_m}{n} S_L^{0.5} S_x^{5/3} (T_f - W)^{8/3}$ $Q_s = \frac{K_m}{n * S_x} S_L^{0.5} D_s^{8/3}$	Ex. 4-2
Q_w Quantity of Flow across depression W. Use with a ≠ 0 ($S_w > S_x$).	$Q_w = \frac{K_m}{n*S_w} S_L^{0.5} (D_f^{8/3} - D_s^{8/3}) = E_0 * Q_t$	
V Average Velocity of Flow, given a = 0	$V = \frac{K_V}{n} S_L^{0.5} S_x^{2/3} T_f^{2/3}$	Eq. 4-13
V Average Velocity of Flow, given a ≠ 0	$V = \frac{Q_f}{A_f} = \frac{Q_f}{0.5*D_f*T_f*S_x + 0.5*a*W}$	Ex. 4-7
E_0 Ratio of frontal flow to total flow no gutter depression, constant S_x	$E_0 = Q_w / Q_t$ $E_0 = 1 - (1 - {}^{W}/_{T_f})^{8/3} \leq 1.0$	Eq. 4-16
E_0 Ratio of frontal flow to total flow with gutter depression, W = width of depression	$E_0 = 1/[1 + \frac{S_w/S_x}{\left[1 + {}^{S_w/S_x}/_{T_f/W} - 1\right]^{8/3}}] \leq 1.0$	Eq. 4-4
E'_0 Ratio of frontal flow to total flow for grates in other composite cross sections, $W_d < W$	A'_w = Flow area across grate width W_d only A_w = Flow area in depressed gutter width W $E'_0 = E_0 * \frac{A'_w}{A_w}$	Eq. 4-20a
R_f Ratio of intercepted frontal flow to total frontal flow	$R_f = 1 - K_f * (V - V_0) \leq 1.0$	Eq. 4-18

Description	Equation	HEC-22 Reference
R_s Ratio of intercepted side flow to total side flow	$R_s = 1/(1 + \frac{K_s V^{1.8}}{S_x L^{2.3}}) \leq 1.0$ **Set to 0 for Bridge Drainage**	Eq. 4-19
$E = E_{inlet}$ Efficiency of grate as a ratio of captured to total flow.	$E = Q_i/Q_t \; E = R_f * E_0 + R_s * (1 - E_0)$ given that $R_s = 0$, $E = R_f * E_0$	Eq. 4-20
$Q_i = Q_{intercept}$ Intercept (Captured) Flow at Drain on Grade S_L	$Q_i = Q * [R_f * E_0 + R_s * (1 - E_0)]$ given that $R_s = 0 \rightarrow Q_i = Q * E_0 * R_f$	Eq. 4-21
$Q_b = Q_{bypass}$ Bypass Flow at Drain	$Q_b = Q * (1 - E_0 * R_f)$	
$Q_d = Q_{downspout}$, Q_{orif} Flow Capacity of Downspout and Intercept Flow at Drain in Sump Location (orifice flow)	$Q_d = C_O * A_O * (2 * g * H_O)^{1/2}$	Eq. 4-27 Eq. 8-18
Q_{weir} Intercept Flow at Drain in Sump Location (weir flow)	$Q_i = C_w * P * H_O{}^{1.5}$	Eq. 4-26
H_O, Eff. Head at Center of Downspout, Standard Tube Drain	Per standard, tube is mounted flat. Therefore, average height across W_d is given as: $H_O = D_f$	
H_O, Eff. Head at Center of Downspout, Aesthetic Deck Drain	Assume drain box is full $H_O = d + D_b$	
L_C Maximum spacing on flat bridge	$L_C = \frac{1312}{(n*C*i*W_p)^{0.67}} S_x^{1.44} T_{all}^{2.11}$	HEC-21, Eq. 24
P Minimum perimeter required within distance L_C of flat portion of bridge	$P = \frac{(C*i*W_p)^{0.33} T^{0.61}}{102.5*S_x^{0.06}*n^{0.67}}$	HEC-21, Eq. 25

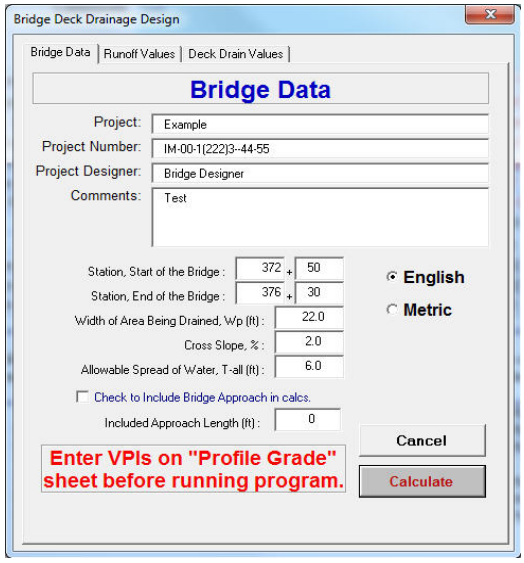

Spreadsheet Setup:

- Enter the project profile on the "Profile Grade" sheet. You must enter at least two VPIs, and the spreadsheet will calculate the appropriate g_1, g_2, PVC, PVT, and S_L values.

VPI STA	VPI ELEV	L of VC
325+00.00	550.000	0.000
350+00.00	600.000	1000.000
375+00.00	550.000	
		0.000

- Press "Push Button to Run Program" on the "Drains" sheet. Enter the Project Name, Project Number, Designer, and Comments. Enter the starting and the ending station of the bridge and the W_p, S_x, and T_{all} values. The program can include an extra length for the approaches if desired (this value can be changed later without re-running the program). Selecting "English" or "Metric" will change units and recommended values to the correct system.

- Check the variables and settings on the "Deck Drain Values" Tab. Typical and recommended values are given for the Standard Tube and Aesthetic deck drains. For a conservative analysis, use a = 0 (no depression at drain). The designer should take care to completely understand the calculations before deviating from the recommended values.

- When the "Calculate" button is pressed, the program will begin analysis by finding the high point of the bridge and working forwards and backwards from that point. The program will inform the user if drains are required (maximum spread is exceeded), and will then ask for the number of drains and the spacing. The program will give some guidance to the user as to maximum spacing between drains.

- After the program has been run, it will unlock cells that may be changed by the user without re-running the program. These cells are indicated by blue highlighting.

  - Any changes to profile grade or the number of drains requires the user to re-run the program.

  - An analysis with a deck drain depression (a≠0) requires an interactive solution; therefore, no cells may be

changed after processing.

- For other drains, the drain spacing, efficiency (if applicable), allowable spread of water, and length of approach may be adjusted after processing.

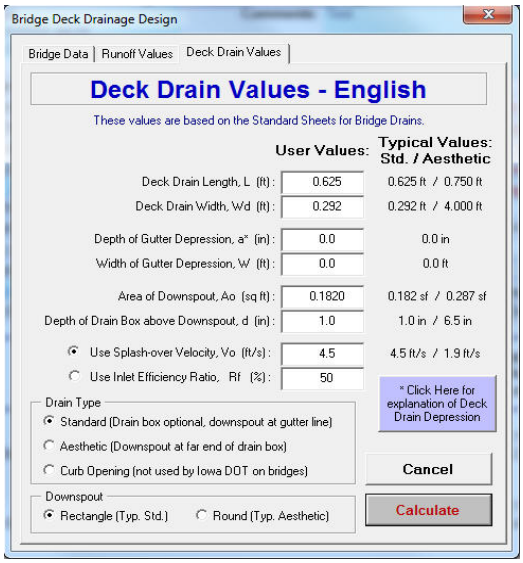

Steps for Hydraulic Analysis:

After completing the dialog boxes shown above, the spreadsheet will complete the following analysis steps. The program will first test the Qtotal and Tf for the entire bridge to determine if drains are hydraulically necessary. If so, the program will prompt the user for the number of drains and for the Spacing (Step 2) between drains. The same steps apply if the user wishes to do hand-calculations.

Steps for Standard Tube Drain or Aesthetic Drain on Grade

These inlets are treated as a grate inlets. For the Standard Tube Drain, R_f will typically equal 1 (all frontal flow is captured). The capacity of the grate should be checked against the capacity of the downspout.

1) Determine high point of bridge (starting point for analysis). If the bridge is entirely uphill or downhill, start at the high end of bridge and work towards the opposite end. If the bridge is located on a crest or sag curve, the analysis will need to be done twice. For a crest bridge, start at the high point and work towards the start of the bridge, then begin again at the high point and work towards the end of the bridge. For a bridge with a low point, start at the beginning and work towards the middle, noting the final flow at the low point. Then begin again at the end of the bridge, work towards the middle, and add the final flow to the flow from the first half to analyze the sump drain at the low point.

$$Slope\ at\ Sta\ "X" = \frac{g_1 - g_2}{L\ of\ VC} * (Sta\ -\ VPC)\ +\ g_1$$

As the bridge end drain is located past the double-reinforced approach section, and the approaches are curbed, it would be appropriate to include the length of approaches in the analysis. If the Length of Approach is specified, the spreadsheet will add this length to either the first or last Spacing, depending on the slope of the bridge. The user may not place a drain on an approach.

2) Spacing: Input spacing from previous drain or high point to current drain. The program will alert the user as to the maximum distance before the allowable spread is exceeded. For guidance as to drain efficiency, the program will also calculate the distance until the capacity of the gutter exceeds the capacity of the downspout.

3) Q_{total}: Calculate total discharge at Drain based on bypass from upstream inlet and spacing to drain. $Q_t = (C * i * A) / A_{constant} + Q_{bypass}$; $A = W_p * Distance$

4) T_f: Find Total Width of Flow for Discharge.
   If a = 0 ($S_w = S_x$), T_f can be calculated directly from the gutter flow equation: $T_f = (Q_f * n / (K_m * S_x^{5/3} * S_L^{0.5}))^{0.375}$

   If a ≠ 0, T_f must be found interactively by assuming a Q_s and:
   finding T_s for the Q_s, $T_s = (Q_s * n / (K_m * S_x^{5/3} * S_L^{0.5}))^{0.375}$
   calculating the total T_f, $T_f = T_s + W$
   calculating the E_0 for this configuration,
   $E_0 = 1/\{1+(S_w/S_x)/[(1+(S_w/S_x)/(T/W-1))^{\wedge 8/3}-1]\}$
   re-calculating Q_s. $Q_s = (1 - E_0) * Q_t$
   Compare this Q_s to the assumed Q_s, adjust, and repeat until the values match.

   If $T_f > T_{all}$, spacing is too large and the distance should be shortened.

5) V: Find Velocity of Flow, Q/A
   If a = 0, then $V = K_v / n * S_L^{0.5} * S_x^{5/3} * T_f^{2/3}$, or
   $V = Q_t / (0.5 * T_f^2 * S_x)$
   If a ≠ 0, then $V = Q_t / (0.5 * T_f^2 * S_x + 0.5 * a * W)$

6) E_0: Find ratio of frontal flow to total flow
   If a = 0, then $E_0 = 1 - (1 - W / T_f)^{8/3}$
   If a ≠ 0, then $E_0 = 1/\{1+(S_w/S_x)/[(1+(S_w/S_x)/(T/W-1))^{\wedge 8/3}-1]\}$
   If $W_d \neq W$, then use E'_0 in place of E_0 $E'_0 = E_0 * A'_w / A_w$
   $= E_0 * (W_d * (D_f + W_d * S_w)/2)/(W * (D_f + D_b)/2)$

7) R_f: Find ratio of captured frontal flow to frontal flow $R_f = 1 - K_f * (V - V_0) \leq 1.0$

8) E_{inlet}: Find Efficiency of Inlet $E_{inlet} = E_0 * R_f$

9) Q_{inlet}: Calculate Intercepted Flow at Drain 1 $Q_i = E * Q = Q * E_0 * R_f$
   If including a E_{deb} term reduction, then $Q_i = Q_i * E_{deb}$

10) $Q_{downspout}$: Find Flow Capacity of Downspout, $Q_d = C_O * A_O *(2* g * H_O)^{0.5}$
If Standard Drain, then $H_O = D_f = T_f * S_x + d$
If Aesthetic Drain, then $H_O = D_b = T_f * S_x + d - W_d * S_w$

If $Q_d \leq Q_i$, then $Q_i = Q_d$

11) Q_{bypass}: Evaluate Bypass Flow $Q_b = Q - Q_i$

12) Repeat for next Distance, adding Q_b to the pavement runoff to the next drain.

<u>Steps for Standard Tube Drain or Aesthetic Drain at Sump Location</u>

The capacity required at the drain is equal to the total flow entering the sag from both directions. The flow is compared to the weir and orifice flows to determine the correct model, and the spread generated by that drain flow is then determined. For Curb Inlets at sump locations, HEC-22 shows that Weir flow occurs up to a depth equal to the height of the curb opening, and Orifice flow occurs with depths greater than 1.4 times the height of curb opening. Between these two depths, transition flow occurs. A similar division and transition zone occurs with Grate Inlets. However, HEC-22 does not give approximate depth limits for these flows; it is dependent on the grate configuration and relative values of P and A_{clear}. By reviewing Equation 4-26 and Chart 9b, it appears that Weir Flow occurs up to a Depth ≈ $0.1875*P^{2/3}$. Orifice Flow begins at a Depth ≈ $0.67*A_{clear}^{0.5}$. For grates that are shorter than they are wide (as in the Aesthetic deck drain), the Weir Flow will be limited by the Orifice Flow curve at the same depth. See Figure 5 below.

The drain discharge flow is also limited by the capacity of the downspout, assuming it operates in Orifice flow.

1) Distance: Calculate total spacing from both previous drains to sag drain (flow will come from both directions).

2) Q_{total}: Calculate total discharge at Drain based on bypass from upstream inlets and spacings to drain. $Q_t = (C * i * A) / A_{constant} + Q_{bypass-1} + Q_{bypass-2}$
$A = W_p * (\text{Distance1} + \text{Distance2})$

3) $Q_{downspout}$: Find Flow Capacity of Downspout, $Q_d = C_O * A_O *(2* g * H_O)^{0.5}$
If Standard Drain, then $H_O = D_f = T_f * S_x + d$
If Aesthetic Drain, then $H_O = D_b = T_f * S_x + d - W_d * S_w$
Assuming $T_f = T_{all}$, Solve for Q_d. If $Q_d > Q_t$, add more flanking inlets to reduce flow at sump location, or increase the size of the downspout.

4) Q_{weir}, maximum: Determine the maximum capacity of weir flow.
$Q_{weir-max}$ occurs approximately when $D_{weir} = 0.1875 * P^{2/3}$
The intersection of the weir and orifice flow curves can be found by setting $Q_{weir} = Q_{orif}$ and solving for D $D_{weir} \leq (C_O * A_{clear} * (2 * g)^{0.5}) / (C_w * P)$
The Q at this depth can be found from Equation 4-26 $Q_{weir} = C_w * P * D_{weir}^{1.5}$

<u>For a Standard Tube Drain</u>

$D_{weir} = 0.1875 * 1.208^{2/3}$
$\leq 0.67 * 0.1823 * (2*32.2)^{0.5} / (3 * 1.208)$
$D_{weir} = 0.213 \leq \cancel{0.270}$ ft.
$Q_{weir} = 3.0 * 1.208 * 0.213^{1.5} = 0.36$ cfs

<u>For an Aesthetic Deck Drain</u>

$D_{weir} = 0.1875 * 8.75^{2/3}$
$\leq 0.67 * 2.7 * (2*32.2)^{0.5} / (3 * 8.75)$
$D_{weir} = \cancel{0.796} \leq 0.553$ ft.
$Q_{weir} = 3.0 * 8.75 * 0.553^{1.5} = 10.80$ cfs

Based on these calculations, for the typical drainage volumes on IDOT bridges, the Aesthetic Deck Drain should always be in weir flow.

5) Q_{orif}, minimum: Determine the minimum capacity of orifice flow.
$Q_{orif-min}$ occurs approximately when $D_{orif} = 0.67 * A_{clear}^{0.5}$
The Q at this depth can be found from Equation 4-26 $Q_{orif} = C_O * A_{clear} * (2 * g * D_{weir})^{0.5}$

<u>For a Standard Tube Drain</u>

$D_{orif} = 0.67 * 0.1823^{0.5} = 0.286$ ft
$Q_{orif} = 0.67 * 0.1823 * (2 * 32.2 * 0.286)^{0.5}$
$Q_{orif} = 0.52$ cfs

<u>For an Aesthetic Deck Drain</u>

$D_{orif} = 0.67 * 2.70^{0.5} = 1.101$ ft
$Q_{orif} = 0.67 * 2.70 * (2 * 32.2 * 1.101)^{0.5}$
$Q_{orif} = 15.23$ cfs

Based on these calculations, for the typical drainage volumes on IDOT bridges, the Aesthetic Deck Drain

should always be in weir flow.

6) D_{inlet}: The actual capacity of the inlet is equal to the flow at the sump location, Q_{total}. The average depth of water across the inlet generated by this flow can be determined by the characteristics of the inlet.

If $Q_{total} \leq Q_{weir\text{-}max}$ occurs, then $D_{inlet} = D_{weir} = (Q_{total} / (C_w * P))^{2/3}$

If $Q_{total} \geq Q_{orif\text{-}min}$ occurs, then $D_{inlet} = D_{orif} = (Q_{total} / (C_O * A_{clear} * (2 * g)^{0.5}))^2$

If Q_{total} is in transition flow, find D_{inlet} as a ratio between $D_{weir\text{-}max}$ and $D_{orif\text{-}max}$.

$$D_{inlet} = (Q_{total} - Q_{weir\text{-}max}) * \frac{(D_{orif\text{-}min} - D_{weir\text{-}max})}{(Q_{orif\text{-}min} - Q_{weir\text{-}max})} + D_{weir\text{-}max}$$

7) D_f : Determine the depth of water at the curb (D_{inlet} is the average depth across the inlet).

$$D_f = D_{inlet} + S_w * W_d / 2$$

T_f : Determine the spread at the sump location.

If $S_w = S_x$, $T_f = D_f * S_x$

If $S_w \neq S_x$, $T_f = (D_f - W) * S_x + W * S_x$

If $T_f > T_{all}$, then the sump drain is insufficient. The sump drain should be modified or additional flanking inlets should be used to intercept the flow.

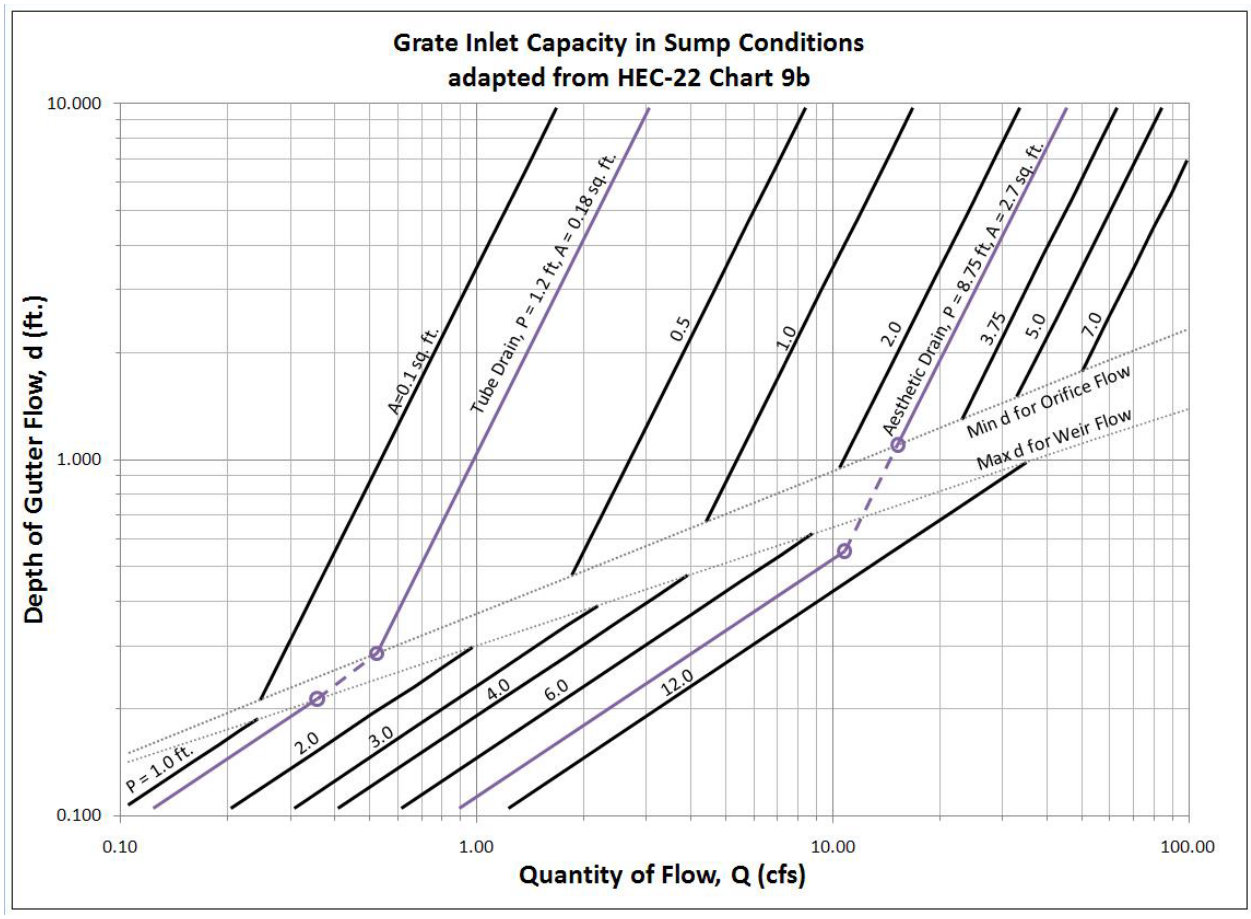

Figure 5: Grate Inlet Capacity in Sump Conditions

Additional Checks:

- Spacing of First Drains

  The maximum spacing between inlets is limited by a flat condition (S_L<0.3%). This occurs on flat profiles and at the top of a vertical curve (at the bottom of a vertical curve, the spacing is controlled by the sump condition requirements). The maximum spacing can be found using HEC-21 Eq. 24. $L_C = \frac{1312}{(n*C*i*W_p)^{0.67}} S_x^{1.44} T_{all}^{2.11}$

  This requires a minimum inlet perimeter based on HEC-21 Eq. 25. $P = \frac{(C*i*W_p)^{0.33} T^{0.61}}{102.5*S_x^{0.06}*n^{0.67}}$

- Spacing of Flanking Drains at Sump Locations

  Flanking Inlets serve to discharge the flow at the sump location should the primary drain become clogged. Therefore, the flanking inlets should not be included as part of the hydraulic analysis.

  - The BDM Article 5.8.4.2.1 recommends placing the flanking drains where the longitudinal slope S_L = 0.3% on each side of the sag point. Considering that K is the rate of vertical curvature, the spacing, x, to a given S_L from the sag point is given as:

    $$x = S_L * K$$

    S_L is in percent.

  - HEC-22 Sec. 4.4.6.3 illustrates the maximum spacing of flanking inlets. If the flanking inlets are the same dimension as the primary inlet, they will each intercept one-half the design flow when they are located so that the depth of ponding at the flanking inlets is 63% of the depth of ponding at the low point. The spacing, x, to achieve this depth is given as:

    $$x = \sqrt{74 * d_i * K}$$

    K is the rate of vertical curvature, given as:

    $$K = \frac{L\ of\ VC}{G_2 - G_1} \leq 167$$

    G_2 and G_1 are in percent, and 167 is the K limit for drainage from AASHTO.

For comparison purposes, the x values for the minimum K at various design speeds are given in Figure 6. These K values are taken from the Design Bureau's Design Manual, Sec. 6D-5, Table 3. Since these are minimum K values, and in most cases the actual K value from the profile vertical curve on a bridge will be higher, the values in this table may be considered conservative. The flanking inlets should not be placed farther away than the distance indicated by the above equations. In general, it will be sufficient to place the flanking inlets 10-15 feet from the sag point.

Design Speed (mph)	**Min. K for Stopping Sight Distance**	**Distance from Sag Point to S_L = 0.3% (ft.)**	**Distance from Sag Point to 63% d_i (ft.)**		
			T_{all} = 6 ft.	**T_{all} = 8 ft.**	**T_{all} = 10 ft.**
30	37	12	19	21	24
35	49	15	21	25	27
40	64	20	24	28	31
45	79	24	27	31	35
50	96	29	30	34	38
55	115	35	32	37	42
60	136	41	35	41	45
65	157	48	38	44	49
70	181	55	41	47	52

Figure 6: Maximum Distances to Flanking Inlets

TABLE OF CONTENTS ~ REINFORCEMENT

5.8.5 Reinforcement
5.8.5.1 General
5.8.5.1.1 Policy overview
5.8.5.1.2 Design information
5.8.5.1.3 Definitions
5.8.5.1.4 Abbreviations and notation
5.8.5.1.5 References
5.8.5.2 Reinforcement Protection
5.8.5.3 Reinforcement Type and Grade
5.8.5.4 Mechanical Splice Assemblies

5.8.5 Reinforcement

5.8.5.1 General

5.8.5.1.1 Policy overview

Reserved.

5.8.5.1.2 Design information

Reserved.

5.8.5.1.3 Definitions

Black reinforcement refers to uncoated or otherwise unprotected steel reinforcement.
Primary Highway System: "Primary roads" or "primary road system" means those roads and streets both inside and outside the boundaries of municipalities which are under department (defined as state department of transportation) jurisdiction [Iowa Code 306.3.6].

5.8.5.1.4 Abbreviations and notation

CMB IM, Construction and Materials Bureau Instructional Memorandum

5.8.5.1.5 References

Reserved.

5.8.5.2 Reinforcement Protection

Unless otherwise specified, steel reinforcement shall be uncoated and meet the Standard Specifications and Materials IMs [IDOT SS 4151.03; CMB IM 451].

Standard county bridges (e.g. H24, J24) may use only uncoated (black) reinforcement because those bridges will be used on roads not treated with deicing chemicals.

For the Primary Highway System, reinforcement in all railings, superstructure components, and substructure components exposed to deicing chemicals shall be protected unless otherwise noted. The typical method of protection is epoxy coating, however, stainless steel dowels are specified for approach slab to abutment connections in some cases, and alternate methods of protection may be specified on a case-by-case basis.

Epoxy coated reinforcement [IDOT SS 4151.03.C; CMB IM451.03B] is required specifically for the following:

- Standard bridges J40 and J44 (with exceptions for some substructure components)
- Railings [BDM 5.2.4.1.2, 5.4.1.4.2, 5.5.2.4.2, 5.6.2.4.2, BSB SS 1017-1028]
- Bridge decks [BDM 5.2.1.1, 5.2.4.1.1.2, 5.2.4.1.2]
- Prestressed concrete deck panels [BDM 5.2.4.3, 5.2.4.3.2]
- CCS superstructures (except pile spirals) [BDM 5.6.1.4.2]
- PPCB superstructures including shear steel and haunch reinforcement that extends into the deck (except pile spirals) [BDM 5.4.1.4.2, 5.3.2.1]
- CWPG superstructures (except pile spirals) [BDM 5.5.1.4.2]
- Integral abutments (except pile spirals) [BDM 6.5.4.1.2]
- Stub abutments [BDM 6.5.4.2.2]
- Wings, abutment wing extensions, abutment diaphragm wing extensions, and wing extensions [6.5.4.3.2]
- Pier caps under expansion joints [BDM 6.6.4.1.1.2]
- Pier columns under expansion joints or within 25 feet of the edge of the traveled roadway [BDM 6.6.4.1.2.2]
- Reinforced approach sidewalk slabs [BSB SS 1029E-1029F]
- Bridge lighting pole bases [BSB SS 1030A]
- Box culvert slabs, corbels, and wall reinforcement that extends into the slab when the roadway is on the slab [BDM 8.2.3.3, 8.2.4.5.1]

Stainless steel dowels or bars [CMB IM 452] are required for the following:

- Barrier rail to bridge deck/wing connections for all state-owned bridges including bridges over the Interstate and Primary Highway System even if the connecting road is unpaved
- Stub abutment to approach slab connection [BDM 6.5.1.1.2]
- Integral abutment to approach slab connection for CCS bridges [BDM 5.6.1.1.1, 5.6.1.4.2]
- Culvert to approach slab connection when the roadway is on the culvert slab [BDM 8.2.4.5.1, E634/M634 in BDM 13.7.2]
- Approach sidewalk to bridge abutment connection [BSB SS 1029E, 1029F]
- Exposed reinforcement during staged construction [BDM 5.2.4.1.2]

Stainless steel reinforcement bar weights for quantities shall be calculated based on uncoated/epoxy-coated steel reinforcement weights since the difference in weight is minimal.

Galvanized steel reinforcement [IDOT SS 4151.03.B; CMB IM 451.02] currently is not specified for any bridge components but may be specified on the plans with approval of the Chief Structural Engineer.

5.8.5.3 Reinforcement Type and Grade

Unless otherwise specified, black and epoxy coated steel reinforcement shall be grade 60 ksi as specified in CADD Note E50E. Specifically, reinforcement shall be deformed bars meeting the requirements of ASTM A 615 grade 60, ASTM A 706 grade 60, or ASTM A 996 grade 60 [IDOT SS 4151.03.A.3].

Black or epoxy coated steel reinforcement may be 80 ksi when needed to reduce congestion. Rebar congestion is reduced by decreasing bar size or increasing bar spacing or both. Cases where 80 ksi may be used to reduce congestion typically include.

- Drilled shafts, pier columns, and pier caps.
- Longitudinal negative moment deck reinforcement (b2 bars) over piers for PPCB bridges. Substitutions shall ordinarily be limited to cases where 60 ksi 9b2 bars are required in the top and bottom of the deck. Those bars may be replaced one-for-one with 80 ksi 8b2 bars in the top and bottom of the deck. [Note: 60 ksi No. 9s with As*fy = (1.00 in^2)*(60 ksi) = 60.0 k is equivalent to 80 ksi No. 8s with As*fy = (0.79 in^2)*(80 ksi) = 63.2 k] See also BDM 5.2.4.1.1.8 and 5.4.1.4.1.7.
- J-bar deck overhang bars where TL-5 single slope rails are used that also require end region j-bar spacing. The 60 ksi 6j1 bars at 3.00-inch spacing in BDM Table 5.2.4.1.2-2 may be replaced by 80 ksi 6j1 bars at 4.00-inch spacing. [Note: 60 ksi No. 6s at 3 inches has As*fy = (0.44

in^2)*((12 in)/(3 in))*(60 ksi) = 105.6 k is equivalent to 80 ksi No. 6s with As*fy = (0.44 in^2)*((12 in)/(4 in))*(80 ksi) = 105.6 k]

A 2599 bid item should be used with a bid item description like “Reinforcing Steel, Epoxy Coated, 80 ksi”. CADD Note E50E shall be modified as needed, but like the following.

> Reinforcing steel in accordance with AASHTO LRFD Section 5, Grade 60 for all epoxy coated and non-coated, except ASTM A615 Grade 80 or ASTM A706 Grade 80 for epoxy coated 8b2 deck bars, and Grade 60 or 75 for stainless.

Per IDOT SS 4151.03.A.2, spirals of No. 5 bars or smaller and any bars No. 3 or smaller for stirrups or hoops of a specified shape may, at the Contractor's option, be steel meeting the requirements of ASTM A 1064 or ASTM A 615 grade 40 unless prohibited in the project plans. Overriding IDOT SS 4151.03.A.2 in the project plans using CADD Note E713 shall be done when using grade 60 continuously wound No. 5 tie bars in frame pier columns to meet the vehicle collision requirements in BDM 6.6.2.6.

Unless otherwise specified, stainless steel reinforcement shall be grade 60 or 75 ksi as indicated in CADD Note E50E. Specifically, stainless steel reinforcement shall be deformed bars and meet the requirements of ASTM 955 and be UNS S31653 (316LN), S31803, S32304 (2304).

5.8.5.4 Mechanical Splice Assemblies

Mechanical splice assemblies, sometimes referred to as mechanical couplers, mechanical splices or mechanical splicers, shall meet the requirements of IDOT Standard Specification 4151.07 and Materials IM 451 Appendix E. There are several different types of mechanical couplers such as threaded sleeves, shear-bolt systems, cold swaged couplers, etc. Approved suppliers and products are listed in MAPLE (Materials Approved Products List).

When able to do so, the DOT prefers to lap reinforcement bars. Limited space due to staged construction or highly congested areas may necessitate the use of mechanical splices. CADD Note E1020 is a plan note that specifically addresses the use of mechanical splices for staged construction of abutment backwalls. This note can be modified as needed to address the use of mechanical splices for other components involving staged construction. The plans shall clearly indicate the number of required splice assemblies for each coated and uncoated bar size.

Mechanical splices for staged construction shall typically be detailed like the form saver type shown in Figure 5.8.5.4 with the form saver coupler embedded in the Stage 1 concrete.

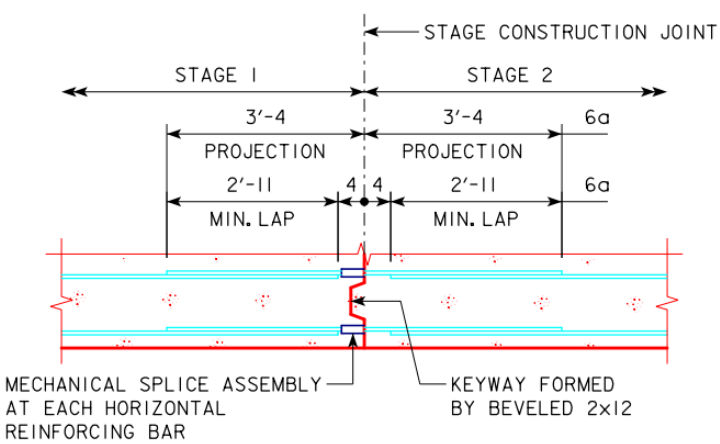

Figure 5.8.5.4. Mechanical splice form saver detail

C5.8.5 Reinforcement protection

BSB adopted the use of stainless steel rebar between the barrier rail to bridge deck/wing connections for interstate and primary bridges starting with the January 2015 letting.

TABLE OF CONTENTS ~ APPROACH SLABS

5.8.6 Approach Slabs
5.8.6.1 General
5.8.6.1.1 Policy overview
5.8.6.1.2 Design information
5.8.6.1.3 Definitions
5.8.6.1.4 Abbreviations and notation
5.8.6.1.5 References

5.8.6 Approach Slabs

5.8.6.1 General

5.8.6.1.1 Policy overview

Approach slabs are intended to provide a smooth transition between the roadway pavement and the bridge. The approach slab spans the embankment directly behind the abutment which is difficult to compact and therefore prone to settlement. Additionally, the approach slab eases the transition between a rigid abutment with negligible settlement and a well-compacted or even undisturbed embankment which may still experience some degree of global or local settlement. Global settlement refers to consolidation of the natural foundation soils which underlie the embankment. Local settlement is caused by compression of fill materials directly beneath the approach pavement.

Standard approach slab details are maintained by the Design Bureau as part of their standard road plans [DB DM 1E-6 and 7D-1; DB SRP BR series]. In most cases, approach slab details will be included in plan sets as part of the road design sheets. On rare occasions bridge designers may need to modify the approach slab details and include them with the bridge plan sheets. In such cases it is necessary to coordinate with the Design Bureau to ensure the bridge and road plan sheets are compatible with respect to the approach slab details and the bid items for it.

Tabulation 112-6 [DB RDD 112-6] in the road design sheets will designate whether an abutment is fixed or movable. This designation determines the type of approach slab details that apply for a project.

- Stub abutments are fixed abutments. The abutment backwall remains stationary since it is isolated from thermal movements of the bridge superstructure. Approach slab pavement lugs are not required since the approach is kept in place by tying it to the stationary abutment backwall using dowels. Type ‘E’ Joints are used at the interface between the backwall and approach slab.
- Integral and semi-integral abutments are movable abutments. These abutments displace with the superstructure as it expands and contracts due to temperature changes. The approach slab is usually (see next bullet for exceptions) held stationary with pavement lugs while Type ‘BE’ joints are used at the interface between the abutment and approach slab to accommodate the abutment displacement.
- In some cases, approach slabs are also tied to integral and semi-integral abutments using dowels. The three-span standard CCS bridges contained in the J40-25 and J44-~~14~~ 25 standards which are to be used for interstate and primary bridges include integral abutments with tied approaches. In these cases, the approach slab displaces with the abutment and superstructure as it expands and contracts due to temperature changes. Type ‘E’ Joints should be used at the interface between the abutment and approach slab. A sleeper slab is typically placed at the other end of the approach slab with a Type ‘BE’ joint to accommodate the relative displacements between the approach slab and the sleeper slab. Standard road plan BR-205 contains approach slab details that are specific to the J40-25 and J44-~~14~~ 25 standards.

Bridge designers should review the road design sheets to ensure the approach slab details are compatible with the bridge and abutment type (see BDM 1.14.2).

5.8.6.1.2 Design information

The Design Bureau will typically contact the Bridges and Structures Bureau to find out whether an abutment is fixed or movable and what type of approach should be used.

Double reinforced bridge approaches (BR-200s) are used for interstate and primary bridges. A 12-inch approach should be used for new construction. A 10-inch approach should be used only if replacing an existing 10-inch approach. Use of double reinforced bridge approaches is encouraged for secondary road bridges.

Use of single reinforced bridge approaches (BR-100s) should be limited to secondary road bridges. Single reinforced bridge approaches may be used as replacement-in-kind for primary bridges on lower volume roads.

Removal of existing bridge approaches is not incidental to the placement of new bridge approaches. The Design Bureau will calculate and bid the removal quantity as a separate item.

The J40-25 and J44-~~14~~ 25 CCS standard bridges use approach slabs based on standard road plan BR-205. The sleeper slab in BR-205 is added into the quantities for the double reinforced section by the Design Bureau. This is done by adding 8 feet (1.75 feet (width of top portion of sleeper slab) + 6.25 feet (width of portion of sleeper slab under the pavement)) to the double reinforced section to calculate square yards.

For double reinforced approaches on gravel roads for secondary road bridges over the interstate and primary road systems, standard road plan BR-241 is typically used. BR-241 uses a 20 foot long approach to minimize gravel on the bridge and drain water further away from the bridge. BR-241 uses special backfill instead of modified subbase.

5.8.6.1.3 Definitions

Fixed Abutment is a term used by the Design Bureau to refer to stationary abutments (e.g. stub abutments).
Movable Abutment is a term used by the Design Bureau to refer to abutments (e.g integral and semi-integral abutments) which displace longitudinally due to expansion and contraction of the bridge superstructure.
Primary Highway System: "Primary roads" or "primary road system" means those roads and streets both inside and outside the boundaries of municipalities which are under department (defined as state department of transportation) jurisdiction [Iowa Code 306.3.6].
Tied Approaches refer to bridge approaches that are connected to the abutment by dowels. Tied approaches are always used with stub abutments and are sometimes used with integral and semi-integral abutments.

5.8.6.1.4 Abbreviations and notation

CCS, continuous concrete slab
DB DM, Design Bureau Design Manual
DB RDD, Design Bureau Road Design Details
DB SRP, Design Bureau Standard Road Plan

5.8.6.1.5 References

Reserved.

TABLE OF CONTENTS ~ BRIDGE SUBSTRUCTURE DESIGN

6 Bridge Substructure Design
6.1 General
6.1.1 Policy overview
6.1.2 Design information
6.1.3 Definitions
6.1.4 Abbreviations and notation
6.1.5 References
6.1.6 Substructure and Foundation Selection
6.1.6.1 Abutments
6.1.6.1.1 Shallow Bedrock
6.1.6.1.1.1 Integral Abutments
6.1.6.1.1.2 Semi-integral Abutments
6.1.6.1.1.3 Stub Abutments
6.1.6.2 Piers
6.1.6.2.1 Shallow Bedrock
6.1.6.2.1.1 Pile Bents
6.1.6.2.1.2 T-Piers
6.1.6.2.1.3 Frame Piers
6.1.6.2.1.4 Diaphragm Piers
6.1.7 Construction and Staging Considerations for Substructures
6.1.7.1 Driven Pile Conflicts
6.1.7.2 Shoring and Cofferdam Considerations
6.1.7.3 Downdrag Considerations for Existing Pile Foundations
6.1.7.4 Bridge Displacement Due to Construction Generated Vibration Effects

6 Bridge Substructure Design

6.1 General

The series of articles under Section 6, Bridge Substructure Design, is intended to fit together as a unit. As much as possible, cross references are used to avoid duplication.

In a following article [BDM 6.1.5], several references are listed for soils, driven piles, and integral abutments. Although the soils reference, *Foundation Soils Information Chart, Pile Foundation*, (a.k.a. Blue Book) has not been updated for LRFD, it provides some of the background on which the Iowa State University LRFD calibration for driven piles was based.

For driven pile design, in 2007 the Bureau moved to an interim LRFD procedure with a single resistance factor of 0.725 fitted to the Blue Book and to an approximate average load factor of 1.45. Since the LRFD statistical calibration to static pile load tests was completed by Iowa State University (ISU) in 2012, the pile section [BDM 6.2] of the LRFD Bridge Design Manual has been rewritten to adopt geotechnical and target driving resistance factors from the research discussed in *Volume IV of Development of LRFD Procedures for Bridge Pile Foundations in Iowa* and from subsequent discussions with the researchers regarding setup in cohesive soil. More basic information about the ISU research is available in earlier Volumes I - III [BDM 6.1.5].

In the past, designers were encouraged to obtain and use the 1987 integral abutment reference, *Final Report, Pile Design and Tests for Integral Abutment Bridges, HR-273, and Addendum*, for relatively long bridges. However, the Bureau no longer encourages use of the reference because the bridge length policy was revised to allow longer bridges, and the 2005 reference, *Field Testing of Integral Abutments, Final Report HR-399*, has modified the older recommended design procedures [BDM Table 6.5.1.1.1].

The two integral abutment references generally substantiate the present policy, and the designer may find them useful in understanding the various rules associated with the policy.

6.1.1 Policy overview

In the Bridges and Structures Bureau, the design of typical highway bridge substructures proceeds from preliminary to final design units. The preliminary design unit selects the abutment, pier, and foundation type based on bridge site information and criteria stated in *Bridge Design Manual* Section 3, Preliminary Design. In some cases, the preliminary design unit also considers aesthetic criteria in Section 9. Final design units then complete the structural design and detailing following policies in Section 5, Bridge Superstructure Design, and Section 6, Bridge Substructure Design. In some cases, the final design units in consultation with the Soils Design Unit may decide to change the substructure type and/or foundation type based on soils information or other factors that arise during the final design process.

For a bridge over a waterway a Corps of Engineers 404 permit is required, but there no longer is a need for a note on the bridge plans. For typical bridge projects the Design Bureau will provide notes and details for the 404 permit. If special permit conditions are identified in the submittal letter from the Location and Environment Bureau (Green Sheet), the Bridges and Structures Bureau will work with the Design Bureau to provide appropriate notes and details in the project plans.

The Bureau interprets the basic AASHTO LRFD specifications when designing foundations, abutments, and piers and specifies rules for detailing of those substructure components. This series of articles on substructure components covers most typical designs but does not cover special designs for signature bridges and long-span bridges.

In all cases substructure components need to be designed for vertical and lateral loads, settlement, stability, and economy considering the complete bridge structure. Pile, drilled shaft, footing, abutment, and pier design is affected by the choice of bearings [BDM 5.7] because bearings transmit loads from the superstructure. Abutment and pier design also is affected by the choice of foundations because foundations provide support and either partial or complete fixity.

For highway bridge foundations, the Bureau generally selects among three types: piles, drilled shafts, and spread footings. Because most Iowa bridge sites are in rural areas and because bedrock seldom is near the surface, site conditions and economy usually favor the use of piles for the support of substructure components. In cases where pile driving would disturb adjacent structures and where site conditions permit, substructure components may be supported on drilled shafts. In cases where bedrock is close to the planned bottom elevation of a substructure component, the component should be placed on a spread footing notched into the rock.

To eliminate expansion joints, wherever practical the Bureau selects integral abutments first and semi-integral abutments second over other abutment types. Based on research and testing for bridges without skew, the Bureau generally orients integral abutment steel H-piles for weak axis bending with respect to longitudinal expansion or contraction of the superstructure. For integral abutment bridges with skews of 30 degrees or less, H-piles are rotated to align the pile webs with the centerline of abutment bearings. However, at skews above 30 degrees, integral abutment piles shall be aligned with pile webs perpendicular to centerline of roadway.

Except for integral abutments, wherever practical the Bureau batters some of the foundation piles for a substructure component. Semi-integral abutments typically batter two lines of piles outward at a 1 horizontal to 6 vertical slope, however, designers may elect to design the abutments using a single row of vertical piles. Typically, the inner line of stub abutment piles, stub abutment wing wall piles, and the perimeter piles for pier foundations are battered at a 1 horizontal to 4 vertical slope. The end piles for pile bents are battered at a 1 horizontal to 12 vertical slope.

6.1.2 Design information

For each bridge site the Soils Design Unit in the Design Bureau provides to the Bridges and Structures Bureau a bridge soils package that typically includes three primary items: the boring logs, the soil profile sheet, and the supplemental. There may be other items or attachments as needed based on site conditions and other factors.

The supplemental is organized to provide the N-values for the standard penetration test, but the document typically provides additional information, requirements, and recommendations for three design factors: slope stability, settlement, and foundation. These three items can vary from very short to complex, can discuss work to be done by a grading contractor, and can discuss further coordination between design Bureaus.

For the foundation part of the supplemental, the Soils Design Unit typically recommends a foundation type, usually one of the following:

- Point-bearing piles driven to a rock formation,
- Friction or friction plus bearing piles driven to a specified load capacity, below any expected scour elevation,
- Drilled shafts, or
- Spread footings founded directly on a rock formation.

The Soils Design Unit does not necessarily make more specific recommendations, such as a pile type. If applicable, the section discusses downdrag and relates downdrag to design requirements and delay period. The settlement information on the supplemental includes consolidation time rate information.

The Soils Design Unit typically recommends pile driving points if soil conditions warrant, but the designer may discuss the need with the Unit if it appears that points are advisable.

The majority of Iowa bridge foundations are placed on piles that derive support from shear strength of surrounding soil and end bearing. Based on approximately 280 pile load tests in Iowa soils and experience with previous charts the Soils Design Unit prepared *Foundation Soils Information Chart, Pile Foundation* in 1989, updated the chart in 1994, and accepted charts updated to LRFD geotechnical resistance for trial use in 2006. The revised 2007 LRFD geotechnical resistance charts [BDM 6.2.7] shall be used for design of pile foundations for Iowa bridges.

6.1.3 Definitions

Substructure is any construction below the bearing seats or, in the absence of bearings, below the soffit of the superstructure.

6.1.4 Abbreviations and notation

N or N-value, standard penetration test number of blows per foot. N also may be given as **SPT NO**, the Standard Penetration Test Number, in the soils information chart reference.

6.1.5 References

AbdelSalam, S.S.,K.W. Ng, S. Sritharan, M.T. Suleiman, and M. Roling. *Development of LRFD Procedures for Bridge Pile Foundations in Iowa – Volume III: Recommended Resistance Factors with Consideration of Construction Control and Setup.* Ames: Institute for Transportation, Iowa State University, 2012. (Available on the Internet at: http://www.intrans.iastate.edu/research/documents/research-reports/lrfd_vol_iv_final_w_cvr.pdf)

Abendroth, R.E. and L.F. Greimann. *Field Testing of Integral Abutments, Final Report HR-399.* Ames: Center for Transportation Research and Education, Iowa State University, 2005. (Available on the Internet at http://www.iowadot.gov/operationsresearch/reports/reports_pdf/hr_and_tr/reports/hr399.pdf)

Dirks, Kermit and Patrick Kam. *Foundation Soils Information Chart, Pile Foundation*. Ames: Iowa Department of Transportation, Design Bureau, January 1989/September 1994. (a.k.a. **Blue Book**)

Generally with the move to LRFD, the ASD-based Blue Book is out-of-date, and its contents have been revised and moved to the BDM. The Blue Book is available from the Soils Design Unit in the Design Bureau.

Green, D., K.W. Ng, K.F. Dunker, S. Sritharan, and M. Nop. *Development of LRFD Procedures for Bridge Pile Foundations in Iowa – Volume IV: Design Guide and Track Examples.* Ames: Institute for Transportation, Iowa State University, 2012. (Available on the Internet at: http://www.intrans.iastate.edu/research/projects/detail/?projectID=-700958271)

Greimann, L.F., R.E. Abendroth, D.E. Johnson, and P.B. Ebner. *Final Report, Pile Design and Tests for Integral Abutment Bridges, HR-273, and Addendum.* Ames: Iowa Department of Transportation and College of Engineering, Iowa State University, 1987. (Available on the Internet athttp://www.iowadot.gov/operationsresearch/reports/reports_pdf/hr_and_tr/reports/hr273.pdf)

Ng, K.W., M.T. Suleiman, M. Roling, S.S. AbdelSalam, and S. Sritharan. *Development of LRFD Procedures for Bridge Pile Foundations in Iowa – Volume II: Field Testing of Steel H-Piles in Clay, Sand, and Mixed Soils and Data Analysis.* Ames: Institute for Transportation, Iowa State University, 2011. (Available on the Internet at: http://publications.iowa.gov/13626/)

Roling, M., S. Sritharan, and M. Suleiman. *Development of LRFD Procedures for Bridge Pile Foundations in Iowa – Volume I: An Electronic Database for Pile Load Tests in Iowa (PILOT-IA).* Ames: Institute for Transportation, Iowa State University, 2010. (Available on the Internet at: http://publications.iowa.gov/13624/)

Wang, S., L. C. Reese. *COM624P – Laterally Loaded Pile Analysis Program for the Microcomputer, Version 2.0*. Performed by Ensoft, Inc., Report No. FHWA-SA-91-048, June 1993.

6.1.6 Substructure and Foundation Selection

This article is intended to summarize the important factors affecting the selection of substructure and foundation types.

6.1.6.1 Abutments

For support of typical superstructures, the office generally selects between three types of abutments for shallow-slope embankments: integral, semi-integral and stub. Integral and semi-integral abutments with jointless bridge decks are preferred wherever feasible with integral abutments preferred over semi-integral abutments.

Integral and stub abutments have been used in Iowa for many years while the use of semi-integral abutments has been steadily growing. The most common application to date for semi-integral abutments has been to convert deteriorated stub abutments on older bridges to semi-integral abutments as part of a repair project to eliminate deck expansion joints and protect beam ends. Currently there are no published standard working details available for semi-integral abutments, however, the BSB does have a limited set of draft standards it can provide as a starting point.

Applications for semi-integral abutments on new bridges should generally include the following situations:

- bridge length and skew restrictions preclude the use of integral abutments (Note 1),
- end span limits for steel girders with integral abutments are exceeded,
- shallow bedrock precludes use of steel piling for integral abutments (or may require costly rock coring to make steel piling work with integral abutments),
- drilled shaft foundations at abutments preclude the use of integral abutments,
- wide bridges of 120 feet or more which benefit from the lateral flexibility of expansion bearings on semi-integral abutments,
- ABC, particularly for lateral slides and modular units, and
- high abutments.

Note 1: Iowa has not set a formal policy on limits for semi-integral abutments. However, with designer verification, the maximum permissible length limit for semi-integral abutments for skews up to 45 degrees are generally assumed to be equivalent to those given for integral abutments at a 0-degree skew.

The Bureau prefers to use the same abutment type at both ends of the bridge. However, in cases where a stub abutment is required at one end of the bridge, but not at the other end, consider using a semi-integral abutment to avoid the use of an additional deck joint. Additionally, on single span ABC projects over waterways the superstructure should be positively connected to the substructure on at least one abutment. In this case an integral abutment may be used to positively tie down the superstructure at one end while a semi-integral abutment may be used at the other end.

All three abutment types are typically supported by steel H piles, when practical, due to the low cost of that foundation type. Semi-integral abutments and stub abutments may also be supported by spread footings on rock or drilled shaft foundations. Spread footings are used when the rock is very shallow (see BDM 6.1.6.1.1). Drilled shafts are sometimes used for shallow rock situations (see BDM 6.1.6.1.1) but are more commonly selected for abutments when there are concerns with the noise and vibration that occur during pile driving. In one special case, the Bureau successfully experimented with integral abutments supported on H-piles inserted in drilled shafts.

Iowa is currently exploring the use of a semi-stub abutment type. The concept in this case is to tie the approach slab to the bridge superstructure and carry it over the abutment backwall such that the expansion joint resides at the end of the approach slab. The main benefits of this abutment type are to retain earth against the backwall rather than a movable superstructure while moving the deck joint away from the ends of the bridge beams.

6.1.6.1.1 Shallow Bedrock

Shallow bedrock at an abutment may be conservatively defined as rock, regardless of type (e.g. shale, limestone, etc.) and quality (e.g. solid, hard, broken, weathered, highly weathered, etc.), that is 50 feet or less from the bottom of the superstructure beams. In the absence of shallow rock, abutments are typically supported on steel H piles, regardless of abutment type. When shallow rock is present the designer should consider abutment type and foundation options more closely.

As part of the geotechnical field investigation for bridge foundations, the Soils Design Unit generally specifies boring drill hole locations as discussed in the Design Bureau's Design Manual 200I-1, Appendix A, 6.C and Table 1. A minimum of one drill hole is required at each substructure unit. The borings at each substructure unit are typically staggered from side to side of the bridge along the length of the bridge to establish a longitudinal and transverse soil profile. Ideally, for a suspected shallow rock situation at an abutment, a minimum of two borings should be taken, one at each edge of the abutment to establish the depth of rock along the abutment. In some cases, it may not be possible to obtain two borings, or even one boring, at the new abutment location due to issues with site access. In cases where soil/rock information is minimal at an abutment, the designer, in consultation with the Soils Design Unit, will need to use engineering judgment with respect to depth of rock at the abutment.

6.1.6.1.1.1 Integral Abutments

Integral abutments, when feasible, are the preferred abutment option. The use of integral abutments in shallow rock situations is largely dependent not only on the depth of the rock, but also the depth of prebore required. Prebored holes for integral abutments need not be used for bridges 130 feet or less in length. All abutment piles for bridges longer than 130 feet are placed in prebored holes a minimum of 10 feet deep. Prebored holes of up to 15 feet are commonly used in situations where pile downdrag is expected. Prebored holes are filled with bentonite slurry to maintain the hole opening.

Integral abutments rely on the ability of the pile to develop fixity at both ends of the pile. Rotational fixity at the top of the pile is achieved with sufficient embedment of the pile into the abutment concrete footing. Fixity of the pile at the lower end is typically achieved with sufficient embedment of the pile into the soil. The length of pile embedment in the soil required to achieve fixity can vary significantly depending on

several factors (e.g. soil characteristics, pile size, pile loading conditions, top of pile head condition). For the pile to have a point of fixity the pile must penetrate the soil sufficiently so that there are at least two points of zero deflection below ground [Wang and Reese 1993]. If the pile does not penetrate far enough the bottom of the pile will deflect laterally in a “fence-posting” mode of behavior. [Note that even with two points of zero deflection below ground, selecting the location of the point of fixity itself seems to be open to engineering judgment.]

Shallow rock, combined with depth of prebore, limits the length of pile embedment available to develop at least two points of zero deflection in the soil to establish pile fixity. While pile penetration into the rock during driving would help establish pile fixity, the amount of pile penetration into different types of rock and different quality of rock is difficult to predict in the design phase and difficult to confirm in the construction phase. In some cases, driven piles may penetrate several feet below some rock surfaces, but only bite into or rest on top of other rock surfaces. Additionally, the amount of contact between the sides of the pile surface and the rock is not easily determined and may not be sufficient to help develop lateral resistance. Due to the uncertainty involved, the BSB does not rely on pile penetration into rock to develop fixity of the pile during the design phase. Note, however, that the designer shall include a reasonable amount of additional pile contract length in the bid item to account for the possibility that the pile will penetrate the rock prior to reaching refusal. Doing so will help avoid costly pile field splices. See BDM Table 6.2.4.2-2 for additional pile length to include in the bid item.

The following table indicates the minimum depth of soil overburden required to select integral abutments if no additional analysis is performed.

Table 6.1.6.1.1.1-1. Minimum Depth of Soil Overburden for Integral Abutments (1)

H-pile section	Depth of Prebore, feet(2)	Minimum depth from bottom of beams to top of rock, feet	Minimum depth from bottom of 3-foot thick abutment cap to top of rock, feet	Minimum pile length in direct contact with soil, feet(3)
HP 10	0	30	27	27
	10	37	34	24
	15	40	37	22
HP 12	0	33	30	30
	10	41	38	28
	15	43	40	25
HP 14	0	37	34	34
	10	45	42	32
	15	48	45	30

Table notes:

(1) The designer may subtract 5 feet from the minimum requirements when there are two borings at an abutment, one on each side near the gutterlines. The depth to rock along the abutment should be well-established with two borings and concerns due to a sloping rock surface should be minimal.
(2) Only the most common prebore depths were considered.
(3) Among other assumptions, the pile length required assumed soft clay/loose sand as the overburden. Designers may override the table requirements based on an LPile evaluation of a particular project.

The limits in the table above may be modified if studies demonstrate piles can adequately penetrate rock and develop fixity to prevent fence-post type failures. The use of pile points may be beneficial in penetrating shallow rock but is currently not used for that purpose in shallow rock situations.

Prior to 2021, in cases of shallow rock Iowa often relied upon rock coring combined with at least 3 feet of concrete confinement for piles to establish pile fixity for integral abutments as integral abutments were

seen to be a better option than stub abutments even though rock coring is costly. The policies outlined in this article are designed to encourage the use of semi-integral abutments over integral abutments requiring rock coring. In cases where the use of integral abutments is questionable due to shallow rock concerns, designers are encouraged to use semi-integral abutments.

6.1.6.1.1.2 Semi-integral Abutments

When an integral abutment cannot be used due to shallow rock conditions alone the designer shall use a semi-integral abutment.

Where there are two borings at a semi-integral abutment, one on each side near the gutterlines, then the abutment may be supported on piles so long as each pile has at least 10 feet of pile in direct contact with the soil. Where there is only one boring at an abutment the abutment may be supported on piles so long as each pile has at least 15 feet of pile in direct contact with the soil. The additional 5 feet of pile length in cases where only one boring is present is designed to mitigate the possibility of installed piles being shorter than 10 feet due to a sloping rock surface. Designers shall ensure the piles have adequate lateral resistance to resist lateral loads. In shallow rock conditions, the semi-integral abutment shall be supported on two rows of piles when piles are the foundation choice. The piles in each row are typically battered outwardly in opposite directions with a 1 horizontal to 6 vertical slope (1:6 batter). The pile batter may be increased to 1:4 if lateral forces pose a significant design concern. Pile uplift, if present, should also be considered in the design. The use of pile points for battered piles is recommended for shallow rock conditions. If battered piles cannot be used due to downdrag, then the designer may need to consider the use of a deadman anchor to resist lateral forces. Alternatively, a drilled shaft foundation may be the better option.

Semi-integral abutments are suitable for use with spread footings on sound rock. Spread footings on rock are typically selected as the foundation option for an abutment when suitable rock, as defined by the Soils Design Unit, is 6 feet or less from the bottom of the superstructure beams. Establishing the depth to suitable rock on each end of the abutment, at the abutment, is particularly important for spread footings since excavation costs and plan modification costs can significantly increase if the rock surface is not adequately defined.

Semi-integral abutments are suitable for use with drilled shafts socketed into rock. Drilled shafts are typically selected as a possible foundation option when the rock is too deep for a spread footing, but too shallow for driven piles. Typically, a few 3-foot diameter shafts socketed into rock will provide enough axial and lateral capacity for the abutment. The desirability of using drilled shafts generally increases if the piers are also using drilled shafts. The designer shall consult with the Chief Structural Engineer when drilled shafts are being considered at an abutment. Including two viable foundation design options in the plans may be a benefit.

6.1.6.1.1.3 Stub Abutments

When integral and semi-integral abutments cannot be used, the designer shall use a stub abutment.

Where there are two borings at a stub abutment, one on each side near the gutterlines, then the abutment may be supported on piles so long as each pile has at least 10 feet of pile in direct contact with the soil. Where there is only one boring at an abutment the abutment may be supported on piles so long as each pile has at least 15 feet of pile in direct contact with the soil. The additional 5 feet of pile length in cases where only one boring is present is designed to mitigate the possibility of installed piles being shorter than 10 feet due to a sloping rock surface. Designers shall ensure the piles have adequate lateral resistance to resist lateral loads. Stub abutments on piles are always supported by two rows of piles. The piles in the back row are driven vertically while the piles in the front row are battered outwardly with a 1 horizontal to 4 vertical slope (1:4 batter). Pile uplift, if present, should also be considered in the design. The use of pile points for battered piles is recommended for shallow rock conditions. If battered piles cannot be used due to downdrag, then the designer may need to consider the use of a deadman anchor to resist lateral forces. Alternatively, a drilled shaft foundation may be the better option.

Stub abutments are suitable for use with spread footings on sound rock. Spread footings on rock are typically selected as the foundation option for an abutment when suitable rock, as defined by the Soils Design Unit, is 6 feet or less from the bottom of the superstructure beams. Establishing the depth to suitable rock on each end of the abutment, at the abutment, is particularly important for spread footings since excavation costs and plan modification costs can significantly increase if the rock surface is not adequately defined.

Stub abutments are suitable for use with drilled shafts socketed into rock. Drilled shafts are typically selected as a possible foundation option when the rock is too deep for a spread footing, but too shallow for driven piles. Typically, a few 3-foot diameter shafts socketed into rock will provide enough axial and lateral capacity for the abutment. The desirability of using drilled shafts generally increases if the piers are also using drilled shafts. The designer shall consult with the Chief Structural Engineer when drilled shafts are being considered at an abutment. Including two viable foundation design options in the plans may be a benefit.

6.1.6.2 Piers

For support of typical superstructures, the office generally selects between frame piers, T-piers, pile bents, and diaphragm (wall) piers. The reader is directed to BDM 6.6.1.1 for common considerations when determining the choice of substructure type. When feasible, driven pile foundations are normally selected for frame piers and T-piers due to their low cost and ease of installation. Driven piles are used explicitly for pile bents. When bedrock is close to the surface, spread footings on rock are often selected for frame piers, T-piers and diaphragm piers. Drilled shafts are used for frame piers, T-piers and diaphragm piers. In most cases, a single shaft per column is used for frame piers. Diaphragm piers and T-piers may use a single line of shafts with a common footing. T-piers may also use an array of shafts with a common footing. Drilled shafts are commonly used where space considerations may exclude other foundation types, where noise and vibration due to pile driving are undesirable, where large lateral resistances may be needed, and where the use of cofferdams in a river is undesirable.

6.1.6.2.1 Shallow Bedrock

Shallow bedrock at a pier may be conservatively defined as rock, regardless of type (e.g. shale, limestone, etc.) and quality (e.g. solid, hard, broken, weathered, highly weathered, etc.), that is 30 feet or less from the lowest of the ground line, stream bed, or design scour elevation. In the absence of shallow rock, piers are often supported on steel H piles. When shallow rock is present the designer should consider pier foundation options more closely.

As part of the geotechnical field investigation for bridge foundations, the Soils Design Unit generally specifies boring drill hole locations as discussed in the Design Bureau's Design Manual 200I-1, Appendix A, 6.C and Table 1. A minimum of one drill hole is required at each substructure unit. The borings at each substructure unit are typically staggered from side to side of the bridge along the length of the bridge to establish a longitudinal and transverse soil profile. Ideally, for a suspected shallow rock situation at a pier, a minimum of two borings should be taken, one at each edge of the pier to establish the depth of rock along the pier. In some cases, it may not be possible to obtain two borings, or even one boring, at the new pier location due to issues with site access. In cases where soil/rock information is minimal at a pier, the designer, in consultation with the Soils Design Unit, will need to use engineering judgment with respect to depth of rock at the pier.

6.1.6.2.1.1 Pile Bents

Pile bents are primarily used for low-level, short-span CCS, PPCB, or RSB bridges in small stream applications. The use of pile bents in shallow rock situations is largely dependent not only on the depth of the rock, but also the depth of scour. Pile bents rely on the ability of the pile to develop fixity at the lower end of the pile through sufficient embedment of the pile into the soil. The length of pile embedment in the soil required to achieve fixity can vary significantly depending on several factors (e.g. soil characteristics, pile size, pile loading conditions, top of pile head condition). For the pile to have a point of fixity the pile must penetrate the soil sufficiently so that there are at least two points of zero deflection below ground

[Wang and Reese 1993]. If the pile does not penetrate far enough the bottom of the pile will deflect laterally in a “fence-posting” mode of behavior.

While pile penetration into the rock during driving would help establish pile fixity, the amount of pile penetration into different types of rock and different quality of rock is difficult to predict in the design phase and difficult to confirm in the construction phase. In some cases, driven piles may penetrate several feet below some rock surfaces, but only bite into or rest on top of other rock surfaces. Additionally, the amount of contact between the sides of the pile surface and the rock is not easily determined and may not be sufficient to help develop lateral resistance. Due to the uncertainty involved, the BSB does not rely on pile penetration into rock to develop fixity of the pile during the design phase. Note, however, that the designer shall include a reasonable amount of additional pile contract length in the bid item to account for the possibility that the pile will penetrate the rock prior to reaching refusal. Doing so will help avoid costly pile field splices. See BDM Table 6.2.4.2-2 for additional pile length to include in the bid item.

The following table indicates the minimum depth of direct pile to soil contact to use a pile bent if no additional analysis is performed.

Table 6.1.6.2.1.1-1. Minimum Depth of Pile to Soil Contact for Pile Bents (1)

H-pile section	Minimum soil penetration(2),(3)
HP 10	23
HP 12	26
HP 14	29

Table notes:

(1) This table is based on BDM Table 6.6.4.2.1.1. An additional 5 feet has been added to the values from Table 6.6.4.2.1.1. The designer may subtract 5 feet from the minimum requirements of the table above when there are two borings at a pier, one on each side near the gutterlines. The depth to rock along the pile bent should be well-established with two borings and concerns due to a sloping rock surface should be minimal.

(2) Among other assumptions, the minimum soil penetration assumed soft clay or loose sand. Designers may override the table requirements based on an LPile evaluation of a particular project.

(3) This distance from ground line, stream bed, or design scour elevation to bottom of pile is required for the pile to have a point of fixity. If the pile has less embedment it may fail by “fence-post” action.

The limits in the table above may be modified if studies demonstrate piles can adequately penetrate rock and develop fixity to prevent fence-post type failures. The use of pile points may be beneficial in penetrating shallow rock but is currently not used for that purpose in shallow rock situations.

Prior to 2021, in some rare shallow rock cases Iowa would rely upon rock coring combined with at least 3 feet of concrete confinement for piles to establish pile fixity for pile bents. The policies outlined in this article are designed to encourage the use of pile bents only when pile can be driven without rock coring.

6.1.6.2.1.2 T-Piers

T-piers are used for grade separation structures and for bridges in waterways.

Where there are two borings at a pier, one on each side near the gutterlines, then the pier may be supported on piles so long as each pile has at least 10 feet of pile in direct contact with the soil accounting for loss of soil due to scour as appropriate. Where there is only one boring at a pier the pier may be supported on piles so long as each pile has at least 15 feet of pile in direct contact with the soil accounting for loss of soil due to scour as appropriate. The additional 5 feet of pile length in cases where only one boring is present is designed to mitigate the possibility of installed piles being shorter than 10 feet due to a sloping rock surface. Designers shall ensure the piles have adequate lateral resistance to resist lateral loads. Pile uplift, if present, should be considered in the design. Perimeter pier piles are

typically battered as discussed in BDM 6.6. The use of pile points for battered piles is recommended for shallow rock conditions. The designer must ensure the pier piles can resist lateral loads particularly when pier piles cannot be battered.

T-piers are suitable for use with spread footings on sound rock. Spread footings on rock are typically selected as the foundation option for a pier when suitable rock, as defined by the Soils Design Unit, is 10 feet or less from ground line or stream bed. Establishing the depth to suitable rock on each end of the pier, at the pier, is particularly important for spread footings since excavation costs and plan modification costs can significantly increase if the rock surface is not adequately defined.

T-piers are suitable for use with drilled shafts socketed into rock. Drilled shafts are typically selected as a possible foundation option when the rock is too deep for a spread footing, but too shallow for driven piles. In most cases, a single line or small array of drilled shafts connected by a common footing is sufficient for the foundation.

6.1.6.2.1.3 Frame Piers

Frame piers are commonly used for grade separation structures. Frame piers with one drilled shaft per column are becoming more common for bridges in waterways.

Where there are two borings at a pier, one on each side near the gutterlines, then the pier may be supported on piles so long as each pile has at least 10 feet of pile in direct contact with the soil accounting for loss of soil due to scour where appropriate. Where there is only one boring at a pier the pier may be supported on piles so long as each pile has at least 15 feet of pile in direct contact with the soil accounting for loss of soil due to scour as appropriate. The additional 5 feet of pile length in cases where only one boring is present is designed to mitigate the possibility of installed piles being shorter than 10 feet due to a sloping rock surface. Designers shall ensure the piles have adequate lateral resistance to resist lateral loads. Pile uplift, if present, should be considered in the design. Perimeter pier piles are typically battered as discussed in BDM 6.6. The use of pile points for battered piles is recommended for shallow rock conditions. The designer must ensure the pier piles can resist lateral loads particularly when pier piles cannot be battered.

Frame piers are suitable for use with spread footings on sound rock. Spread footings on rock are typically selected as the foundation option for a pier when suitable rock, as defined by the Soils Design Unit, is 10 feet or less from ground line or stream bed. Establishing the depth to suitable rock on each end of the pier, at the pier, is particularly important for spread footings since excavation costs and plan modification costs can significantly increase if the rock surface is not adequately defined.

Frame piers are suitable for use with drilled shafts socketed into rock. Drilled shafts are typically selected as a possible foundation option when the rock is too deep for a spread footing, but too shallow for driven piles. In most cases, one drilled shaft per frame pier column is used for the foundations.

In some cases, involving waterways, a frame pier with a single shaft per column is more desirable than a T-pier with drilled shafts or driven piles. Drilled shafts with temporary or permanent casing extending above the water can be less expensive than installing cofferdams for footing caps. Additionally, when the drilled shaft casing extends above the water, work on the bridge can continue without risk of floods impeding the work.

6.1.6.2.1.4 Diaphragm Piers

Solid concrete diaphragm piers (wall piers) are the preferred choice for low-level, short-span slab or PPCB bridges where bedrock is near the surface, and it is impractical to drive piles.

Spread footings on rock are typically considered when suitable rock, as defined by the Soils Design Unit, is 10 feet or less from ground line or stream bed. Establishing the depth to suitable rock on each end of the pier, at the pier, is particularly important for spread footings since excavation costs and plan modification costs can significantly increase if the rock surface is not adequately defined.

Diaphragm piers are suitable for use with drilled shafts socketed into rock. Drilled shafts are typically selected as a possible foundation option when the rock is too deep for a spread footing and a wall pier is still desired as the substructure option. In most cases, a line of drilled shafts with a common footing is used for the foundations.

6.1.7 Construction and Staging Considerations for Substructures

This article addresses factors related to the construction and staging of substructures.

6.1.7.1 Driven Pile Conflicts

For most bridge replacement projects, the abutment and pier foundations for new bridges are located to avoid interference with the foundations of current bridges being replaced since the existing foundations are typically left in place just below the surface. However, some projects may still have conflicts that must be addressed. The most common cases involve interference between driven steel HP piles for new bridges and timber piles from existing bridges. [Note: Some bridge replacement project locations may have had a previous bridge replacement project which could indicate the presence of additional foundations left in place from a past bridge removal. Designers should review previous bridge plan sets to determine whether there may be additional foundations that could interfere.] There are two approaches that should be avoided when addressing pile conflicts:

- Designers should not assume the existing timber piles will be removed nor should a note be included in the plans calling for removal. The condition of existing timber piling can vary significantly. The heads of the piles may be deteriorated enough to make it difficult to extract the timber piling. Also, removing a timber pile may leave a void which can reduce the lateral and axial capacity of the new steel pile.
- Designers should not assume that new steel piles can be driven through the existing timber piling. The condition of existing timber piling below the surface may be intact enough to deflect a driven steel pile causing misalignment.

Generally, there are two methods which may be used to mitigate interference.

- The first is to design the new foundation to span across the existing foundation where interference could occur.
- The second is to place the new piles in between the existing piles with a clearance that is the larger of 2.5 feet or 2.5 times the pile size. Because not all the existing piles are likely to be located per the original plan, the designer will need a plan note indicating how far the piles should be spaced from existing piling and how far each pile can be shifted in the field to avoid interference. Designers should design their foundation piles to allow for 6 to 12 inches of shift when interference is a concern. The note should also indicate that the Engineer should be contacted if the limits as given in the plan need to be exceeded. Note that Standard Specification 2501.02 L.1 automatically allows for up to 3 inches of deviation for each pile.

Existing substructure concrete can also lead to conflicts and may need to be addressed with concrete removal or other approaches.

6.1.7.2 Shoring and Cofferdam Considerations

The location of new pier foundations relative to existing foundations should take into consideration the most likely means and methods for construction. Constructing new pier pile foundations often requires installation of temporary sheet pile shoring to maintain the excavated hole for foundation construction. In waterways, sheet pile cofferdams are often used to allow for dewatering the excavated hole. As discussed in BDM 6.6.4.1.4, seal coats are occasionally needed at the bottom of a cofferdam to facilitate dewatering. For deeper excavations, struts and walers may need to be employed inside the enclosure to brace and strengthen the sheet pile walls.

IDOT SS 2405.03.A.4 specifies providing a clear space of at least 36 inches on all sides between the footing and the inside edge of the cofferdam sheet pile (i.e. width of walers does not need to be

considered). The designer should conservatively assume a sheet pile cross-sectional shape of 20 inches in width for cofferdams. New and existing battered bridge piles shall be a minimum of 12 inches clear from the face of the assumed bottom of sheet pile. For the purposes of estimating clearance between battered bridge pile and sheet pile, the sheet pile should generally be assumed to penetrate 25 feet below the bottom of the new footing unless shallower bedrock is present. The 25 feet of sheet pile embedment should generally be assumed even in cases where seal course details are included in the contract plans since their installation is optional.

In cases where it is difficult to meet the above spacing requirements, the designer should discuss options with the Construction and Materials Bureau and Soils Design Unit. Some potential solutions might include:

- Eliminating or reducing pile batter on new bridge foundations.
- Assuming the bridge contractor may need to encompass both the new and existing foundation footprints within the shoring/cofferdam.
- Reviewing soil properties to better estimate depth to bottom of sheet pile.
- Selecting drilled shafts for the foundations.

6.1.7.3 Downdrag Considerations for Existing Pile Foundations

Downdrag occurs when soil around a pile settles more than the pile. This relative settlement between the soil and pile results in negative skin friction, or drag load, on the pile. Under certain conditions, new construction near an existing bridge can produce drag loads on existing bridge piling. The effects of downdrag on an existing bridge which is to remain in service during or after new construction should be considered and addressed by the designer. For purposes of this article, downdrag most commonly occurs under the following scenarios:

- New fill placed on top of soil that has a compressible soil layer, usually a relatively soft cohesive soil layer, that consolidates and settles under the added load thereby causing downdrag load on pre-installed piles.
- Construction activities producing vibrations in relatively loose, poorly graded granular soil which consolidates and settles leading to downdrag loads on pre-installed piles.

Types of construction near existing bridges having the potential to cause soil settlement include:

- Bridge widening projects which require additional fill.
- Staged bridge replacements which require construction of a wider bridge, a bridge just off alignment, and/or a bridge with a grade raise any of which requires additional fill.
- Projects which place box culverts or pipe culverts under existing bridges over waterways or abandoned railroads and after which the space between the structures are filled in.
- Installation of new H-pile, sheet pile, cofferdam or drilled shaft casing near an existing bridge using methodologies that result in significant vibration.

The remainder of this article will only address downdrag on existing piles produced by settlement due to placement of new fill. See BDM Article 6.1.7.4 for additional discussion related to settlements caused by vibration.

Mitigating downdrag effects on existing bridges can have significant cost implications. When the Soils Report indicates downdrag potential for the existing structure (or new structure) or if the bridge designer suspects downdrag is possible then it is incumbent on the designer to meet as early as possible with the DB Soils Design Section and the CMB Foundations and Structures Group to address downdrag concerns. There are several approaches to address concerns related to downdrag on existing pile foundations, such as:

- Evaluate capacity of existing piles based on calculating pile loads and determining pile capacities from as-built pile driving logs (or project plans if logs not available) to resist downdrag loads.
- In some situations, simple monitoring for bridge settlement may suffice. In these cases, the typical mitigation technique is to add an asphalt overlay to the existing bridge deck for better rideability if settlement occurs. This technique is typically reserved for low risk situations involving short bridges with signalized one-way traffic (i.e. low traffic volumes and speeds).

- Isolate the existing pile foundation from negative skin friction effects either in part or altogether. Temporary or permanent sheet pile, where there is room to install it, may be used to isolate existing bridge piling. Using split CMP sleeves could be used around piles in pile bents when fill, causing downdrag, is needed in the region. The depth to the compressible soil layer may affect how deep the isolation technique should extend. (Pile coatings that reduce pile friction, such as bitumen, are generally discouraged.)
- Use expanded polystyrene (EPS) foam (geofoam) blocks, lightweight cellular (foamed) concrete, or other lightweight fill materials to reduce or eliminate downdrag effects.
- Strengthen existing pile foundations typically by driving additional piles that are tied to the substructure unit for additional resistance.
- Remove or core-out compressible soil layers before adding fill.
- Various ground improvement techniques may be applicable.

Subjecting existing (or new) foundations with battered piles to downdrag should be avoided.

6.1.7.4 Bridge Displacement Due to Construction Generated Vibration Effects

A staged bridge replacement project or bridge widening project may have conditions conducive to vibration induced settlement of the existing bridge during construction of the new bridge. Vibration induced settlement can lead to significant displacements affecting the structural integrity of a bridge and the safety of the traveling public. The following three conditions all need to be present for vibration induced settlement to occur:

1. Bridge foundations located in an existing soil mass consisting of loose, poorly graded granular soils (e.g. sands) especially in a saturated condition.
2. Relatively short foundation piles that tip out in the soil mass described in No. 1.
3. Construction methods which induce enough vibration into the soil mass surrounding the existing bridge foundation to cause settlement (compaction/densification/liquefaction) of the bridge foundation in the soil mass. Common construction methods involving the potential for vibration include the use of impact or vibratory hammers to install sheet pile, cofferdams, foundation pile and drilled shaft casings. Using vibratory methods to remove foundation elements can also have the same effect.

Even though the general conditions leading to settlement are known the precise conditions are not well-defined. Additionally predicting how a bridge will displace and what displacements are unacceptable for any given bridge is not easily determined. Differential settlements between substructure units or within the same substructure unit can lead to translations and rotations of the substructure which in turn lead to displacement effects in the superstructure. Overstress of bridge members, functionality of bridge bearings and other components, and rideability can all be affected.

In fiscal year 2025 there were several projects let that included a Special Provision (SP) for Vibration Monitoring. The SP included vibration, tilt, and displacement monitoring programs with alert thresholds. The cost for these monitoring programs is significant. Designers shall discuss any projects with conditions conducive to vibration induced settlement with the Chief Structural Engineer. Any project which includes an SP for Vibration Monitoring of an existing bridge must be approved by the Chief Structural Engineer.

TABLE OF CONTENTS ~ PILES

6.2 Piles
6.2.1 General
6.2.2 Policy overview
6.2.3 Design information
6.2.4 Definitions
6.2.5 Abbreviations and notation
6.2.6 References
6.2.7 Loads
6.2.4.2 Dynamic load allowance
6.2.4.2 Downdrag
6.2.8 Load application
6.2.4.2 Load modifier
6.2.4.2 Limit states
6.2.4 Analysis and design
6.2.4.1 Foundation layout
6.2.4.2 Pile length
6.2.4.3 Contract length
6.2.4.4 Uplift
6.2.4.5 Lateral load
6.2.4.6 Target driving resistance
6.2.5 Detailing
6.2.6 Guidelines by pile type
6.2.6.1 Steel H
6.2.6.2 Concrete-filled steel pipe
6.2.6.3 Timber
6.2.6.4 Prestressed concrete
6.2.7 Nominal geotechnical resistances
6.2.8 Soil categories
6.2.9 Resistance factors
6.2.10 Cohesive soil setup

6.2 Piles

Prior to 2007 the Bridges and Structures Bureau used the charts in the Blue Book [BDM 6.2.1.5] for geotechnical design of piles under allowable stress design and the AASHTO Standard Specifications. In 2007 the Bureau moved to an interim LRFD procedure with a single resistance factor of 0.725 fitted to the Blue Book and to an approximate average load factor of 1.45. Now that the LRFD statistical calibration to static pile load tests has been completed by Iowa State University (ISU) in 2012 this section of the LRFD Bridge Design Manual has been rewritten to adopt geotechnical and target driving resistance factors from the research discussed in *Volume IV of Development of LRFD Procedures for Bridge Pile Foundations in Iowa* and from subsequent discussions with the researchers regarding setup in cohesive soil. More basic information about the ISU research is available in earlier Volumes I - III [BDM 6.2.1.5].

The research Volume IV examples have been rewritten to fit the policies in this Bridge Design Manual section and to include typical structural design checks. The examples are available in a separate file on a Bridges and Structures Bureau web page as LRFD Pile Design Examples [BDM 6.2.1.5].

6.2.1 General

Piles directly support bridge substructure components and other transportation-related structures. In addition to the information in this series of articles the designer should review the information for specific bridge substructure components: abutments [BDM 6.5], piers [BDM 6.6], and sign supports [BDM 10.2].

6.2.2 Policy overview

Although the Bureau uses a variety of foundation types depending on site and design conditions, the Bureau most often selects pile foundations. Since the 1960s the Bureau has recognized the benefits of jointless bridges with integral abutments. Integral abutments for bridges of typical lengths require the lateral flexibility of pile foundations. Through experience with several pile types the Bureau has determined that steel H-piles provide flexibility, as well as adequate capacity for reasonable driven lengths under typical Iowa site conditions. Then, for construction efficiency and cost, it often is appropriate also to use steel H-piles for pier foundations.

However, in some cases there are other considerations for pile selection. For relatively short bridges where site conditions permit, the designer is encouraged to consider treated timber piles. For site conditions that favor displacement piles and also for pile bents without fully encased piles the designer is encouraged to consider prestressed concrete piles. Appropriate pile choices for typical substructure components are summarized in Table 6.2.1.1.

Table 6.2.1.1. Pile choices for support of substructure components

Substructure Component	Pile Choices
Integral abutment	Steel HP 10x57 for PPCB, CWPG, and RSB bridges, HP 10x42 for CCS bridges; timber for bridge lengths to 200 feet
Semi-integral and Stub abutments	Steel HP; timber; 12 inch prestressed concrete
Pier	Steel HP; timber; 12 inch prestressed concrete, concrete-filled steel pipe
Pile bent [OBS SS P10L]	Steel HP; 14 or 16 inch prestressed concrete, 14 or 16 inch concrete-filled steel pipe

As indicated in the table, for typical design conditions the Bureau recommends the HP 10x57 shape when using steel H-piles for integral abutments for pretensioned prestressed concrete beam (PPCB), continuous welded plate girder (CWPG), and rolled steel beam (RSB) bridges [BDM 6.5.1.1.1]. When using steel H-piles for integral abutments for continuous concrete slab (CCS) bridges and for support of other substructure components the Bureau prefers the HP 10x42 shape. To avoid construction errors, the Bureau recommends that only one of the two HP-10 shapes be used on each project.

For driven piles the overall pile design, contract, and construction process followed by the Iowa Department of Transportation is as follows. The process is modified when one or more of the steps are performed by consultants.

- The Soils Design Unit arranges for soil borings and prepares a soils design package for a bridge project.
- Based on the soils design package, designers in the Bridges and Structures Bureau prepare the bridge foundation design with an estimated contract length of piling.
- Contractors bid on installation of the contract length, with the expectation that all of the length will be driven even if bearing is obtained at shorter pile lengths.
- The Construction and Materials Bureau prepares WEAP driving graphs based on the successful contractor's pile driving hammer.
- Inspectors from the Construction and Materials Bureau observe pile driving using the WEAP driving graphs, prepare logs of the driving, and make field adjustments such as retaps and extensions as needed during pile installation.

In general, there are the following pile design considerations under LRFD for the Soils Design Unit and the Bridges and Structures Bureau:

- Axial compression resistance at the strength limit state,
- Downdrag loads at the strength limit state for embankments that will have significant settlement after piles are driven for abutments,
- Column resistance at the strength limit state for unsupported piles above ground, piles in prebored holes, or piles in scour conditions,
- Axial tension resistance at the strength limit state,
- Lateral load resistance at the strength limit state,

- Geotechnical resistance at the strength limit state,
- Target driving resistance at the strength limit state,
- Construction control method, if wave equation analysis (WEAP) is not appropriate,
- Settlement at the service limit state,
- Lateral movement at the service limit state,
- Overall stability at the service limit state,
- Redundant group vs. single pile resistance,
- Design and check scour at piers, and
- Collision, ice, or seismic loads at the extreme event limit state.

Not all these design considerations apply to each foundation pile group. For many pile groups only the axial compression resistance, geotechnical resistance, target driving resistance, and construction control method need to be considered, but the designer should be aware of all the considerations and check all that apply. In general, the Bureau bases structural design on the AASHTO LRFD Specifications and bases geotechnical design and pile driving design on recent Iowa State University research and LRFD calibration. The Bridges and Structures Bureau relies on the Iowa DOT Soils Design Unit for a soils design package consisting of site information, geotechnical analysis, and foundation recommendations and relies on the Iowa DOT Construction and Materials Bureau for WEAP analysis (the usual construction control) and pile driving inspection.

For structural design there are two conditions that must be satisfied: pile axial resistance down to the tip and pile column resistance for piles without continuous lateral support above ground, in prebored holes, or above scour elevation. For these structural conditions the AASHTO LRFD Specifications provide the appropriate resistance factors and analysis information needed for design, but this manual section and the abutment and pier sections provide design simplifications for typical bridges.

On most Iowa bridge sites, piles derive their load-supporting capacity from both friction and end bearing although, depending on site soil conditions, it is possible to design for either friction bearing or end bearing. In cases where the designer intends to use end bearing in a soil layer, piles should be driven into the layer a sufficient amount to develop the end bearing resistance but not so far as to risk punching into a weaker lower layer. In cases where piles bear on rock they should be driven to seat in the rock.

For typical pile foundations the designer will need to estimate contract length and determine target driving resistance at end of drive (EOD) and at one or more potential times for retaps. Determining these values at the strength limit state will require use of the following information given in this section:

- General soil categories [BDM 6.2.8],
- Nominal unit geotechnical resistances extrapolated from the Blue Book [BDM 6.2.7],
- Geotechnical resistance factors [BDM 6.2.9], and
- Setup factors for cohesive soil [BDM 6.2.10].

The third and fourth items depend on the general soil category and the construction control method. For the ISU LRFD statistical calibration used to determine geotechnical resistance factors, pile load tests were categorized based on soil type in contact with length of pile using a 70% rule. If 70% or more of the pile length in contact with soil was against cohesive soil, the soil category was defined as cohesive. If 70% or more of the pile length in contact with soil was against non-cohesive soil, the category was defined as non-cohesive. Otherwise the category was defined as mixed. The designer then must use these three soil categories when selecting resistance factors. Because prebored holes, downdrag, scour, excavation, and pile extensions in the field affect pile length in contact with soil, the soil category may change depending on the design or construction condition, in which case the designer will need to apply different resistance factors as needed. Because of the step up or down in resistance factors at changes in soil category the designer will need to use judgment in unusual cases.

The ISU LRFD statistical calibration for geotechnical resistance factors also considered different construction control methods. For typical Iowa DOT projects, the construction control method is wave equation analysis (WEAP). In special cases and when there is potential economy in more accurate control, the designer may consider PDA/CAPWAP, planned retap at three days, or static pile load test, but all these special controls must be approved by the supervising Unit Leader. County and city agencies

have the option of construction control by the traditional Iowa DOT ENR Formula (modified for LRFD) [IDOT SS 2501.03, M, 2].

In cohesive soil, setup increases the friction bearing resistance of a pile after end of drive (EOD). The ISU LRFD statistical calibration determined the effect of setup for cohesive soils, and that effect has been separated out for determining target nominal driving resistance when the general soil category is cohesive. For mixed and non-cohesive soil categories the setup will be much smaller or negligible, and setup does not need to be considered separately.

The Iowa State University research and LRFD statistical calibration did not cover all driven pile design and construction conditions. For the conditions not covered, such as prestressed concrete and pipe piles, end bearing on rock, tension piles, and lateral loading, the Bureau has made policy decisions considering experience and the AASHTO LRFD Specifications.

For relatively light lateral loading the designer may use assumed nominal resistances given in subsequent articles [BDM 6.2.6.1, 6.2.6.3] or, for greater capacities, the designer may perform an analysis with consideration of soil load-deformation response, pile material, cross section, deflection, and strength criteria. The designer may conduct the analysis with engineering software such as LPILE.

6.2.3 Design information

The soils design package provided for each bridge site by the Soils Design Unit contains the soil logs needed for pile design [BDM 6.1.2] and location of the borings.

Embankment fills are not typically in-place prior to the soil investigation for new structures. Generally, this means fill type and SPT N_{60}-values for the fill are unknown making it difficult to determine friction values for the piling. The Soils Design Unit provides the following suggested properties if the specific fill properties are unknown:

- Embankments are commonly constructed with cohesive Class 10 material which could generally be classified as a Firm Silty Clay or similar material with a blow count of 11 bpf.
- Granular embankments are much less common, but for those constructed one may assume fine sand with a blow count of 15 bpf.

Designers may contact the Soils Design Unit if additional information is required.

For specification, material, or construction information beyond the information in this manual, the designer should consult the following sources. The most up-to-date versions of the publications are available on the Iowa Department of Transportation web site in the Electronic Reference Library (http://www.erl.dot.state.ia.us), except the last item which is available from the Construction and Materials Bureau web site.

- Contracts and Specifications Bureau, *Standard Specifications for Highway and Bridge Construction,* Articles 2501, 4165, 4166, and 4167 (http://www.iowadot.gov/erl/current/GS/Navigation/nav.htm
- Construction and Materials Bureau, Instructional Memoranda, 467, 467.01, 467.03, and 468 (http://www.iowadot.gov/erl/current/IM/navigation/nav.htm
- Construction and Materials Bureau, *Construction Manual* (http://www.iowadot.gov/erl/current/CM/Navigation/nav.htm
- Construction and Materials Bureau, *New Bridge Construction Handbook* (http://www.iowadot.gov/construction/structures/bridge_construction_handbook.pdf)

6.2.4 Definitions

Iowa DOT ENR Formula in this article and its commentary refers to four LRFD versions of the traditional pile driving formula in the Iowa DOT Standard Specifications [Iowa DOT SS 2501.03, M, 2]. The four versions cover different hammer and pile types. The Iowa DOT Standard Specifications were revised in 2013 to the LRFD versions of the formula and now have a constant in the numerator of the first term equal to 12 or larger.

Natural ground elevation is the average natural ground elevation along the longitudinal centerline of the foundation. See the commentary for this article for discussion [BDM C6.2.1.3].

Redundant pile group is a minimum of five piles for all substructure components except abutments. For abutments a redundant pile group is defined by the Bureau as a minimum of four piles.
Retap (or restrike) occurs when a pile previously driven is hammered again after a time period, usually at least 24 hours. Specific instructions for retaps intended to achieve geotechnical pile resistance are given in the Standard Specifications [IDOT SS 2501.03, M, 5].

6.2.5 Abbreviations and notation

CCS, continuous concrete slab
CMP, corrugated metal pipe
CWPG, continuous welded plate girder
EOD, end of drive
F_{SETUP}, setup factor [BDM 6.2.10]
ISU, Iowa State University
l, thickness of soil layer [BDM 6.2.10]
LRFD, load and resistance factor design
MSE, mechanically stabilized earth
N_{60} or N_{60}-value, standard penetration test number of blows per foot corrected to a hammer efficiency of 60%. N_{60} also may be given as **SPT N_{60}-value.** The Iowa DOT is in the process of changing specifications and determining hammer calibrations so that N_{60} values will be reported. Until N_{60} values are available the designer may follow past practice and use uncorrected N-values. See the commentary discussion [BDM C6.2.1.4].
N_a, average N_{60}-value for use with setup chart [BDM 6.2.10]
PPCB, pretensioned prestressed concrete beam
$R_{n\text{-}UP} \geq \Sigma\eta\gamma Q/\varphi_{UP}$, relationship for determining minimum pile length to resist uplift. Individual variables are defined in a subsequent article [BDM 6.2.4.4].
$R_{ndr\text{-}T} \geq (\Sigma\eta\gamma Q + \gamma_{DD}DD)/\varphi_{TAR} + R_{SCOUR} + R_{Sdd}$, relationship for determining target driving resistance. Individual variables are defined in a subsequent article [BDM 6.2.4.6].
RSB, rolled steel beam
SRL, structural resistance level. Four numbered levels are defined in the H-pile article [BDM 6.2.6.1].
$\Sigma\eta\gamma Q + \gamma_{DD}DD \leq \varphi R_n$, basic LRFD geotechnical check with downdrag for a timber, steel H, prestressed concrete, or concrete-filled steel pipe pile. Individual variables are defined in a subsequent article [BDM 6.2.4.3].
$\Sigma\eta\gamma P + \gamma_{DD}DD \leq n\varphi_c P_n$, basic LRFD structural check in the ground for a steel H-pile. Individual variables are defined in a subsequent article [BDM 6.2.6.1].
$\Sigma\eta\gamma P + \gamma_{DD}DD \leq n\varphi P_n$, basic LRFD structural check in the ground for a timber pile. Individual variables are defined in a subsequent article [BDM 6.2.6.3].

6.2.6 References

AbdelSalam, S.S.,K.W. Ng, S. Sritharan, M.T. Suleiman, and M. Roling. *Development of LRFD Procedures for Bridge Pile Foundations in Iowa – Volume III: Recommended Resistance Factors with Consideration of Construction Control and Setup.* Ames: Institute for Transportation, Iowa State University, 2012. (Available on the Internet at: http://www.intrans.iastate.edu/research/documents/research-reports/lrfd_vol_iv_final_w_cvr.pdf)

Dirks, Kermit and Patrick Kam. *Foundation Soils Information Chart, Pile Foundation*. Ames: Iowa Department of Transportation, Design Bureau, January 1989/September 1994. (a.k.a. **Blue Book**) Generally with the move to LRFD, the ASD-based Blue Book is out-of-date, and its contents have been revised and moved to the BDM. The Blue Book is available from the Soils Design Unit of the Office of Design.

GAI Consultants, Inc. *The Steel Pile, Pile Cap Connection.* Washington, DC: American Iron and Steel Institute (AISI). 1982. (Contact AISI for a reprint, for which there is a charge.)

Green, D., K.W. Ng, K.F. Dunker, S. Sritharan, and M. Nop. *Development of LRFD Procedures for Bridge Pile Foundations in Iowa – Volume IV: Design Guide and Track Examples.* Ames: Institute for Transportation, Iowa State University, 2012. (Available on the Internet at:

http://www.intrans.iastate.edu/research/projects/detail/?projectID=-700958271) Hannigan, P.J., G.G. Goble, G.E. Likins, and F. Rausche. *Design and Construction of Driven Pile Foundations, Volumes I and II, FHWA-NHI-05042.* Washington, DC: National Highway Institute, Federal Highway Administration, 2006.

Iekel, P.P., B. Phares, and M. Nop. *Performance Investigation and Design of Pile-To-Pile Cap Connections Subject to Uplift (Expanded)*. Ames: Institute for Transportation, Iowa State University, 2017.

Ng, K.W., M.T. Suleiman, M. Roling, S.S. AbdelSalam, and S. Sritharan. *Development of LRFD Procedures for Bridge Pile Foundations in Iowa – Volume II: Field Testing of Steel H-Piles in Clay, Sand, and Mixed Soils and Data Analysis.* Ames: Institute for Transportation, Iowa State University, 2011. (Available on the Internet at: http://publications.iowa.gov/13626/)

Bridges and Structures Bureau. "LRFD Pile Design Examples ~ 2016". Ames: Bridges and Structures Bureau, Iowa Department of Transportation, 2016.

Construction and Materials Bureau. *Construction Manual.* Ames: Construction and Materials Bureau, Iowa Department of Transportation, 2008. (Available on the Internet at: http://www.iowadot.gov/erl/current/CM/Navigation/nav.pdf)

Construction and Materials Bureau. *Pile Points for Steel H-Piles, Instructional Memorandum 468.* Ames: Construction and Materials Bureau, Iowa Department of Transportation, October 2011. (Available on the Internet at: http://www.iowadot.gov/erl/current/IM/navigation/index_number.htm)

Construction and Materials Bureau. *Steel H-Piles, Instructional Memorandum 467.01.* Ames: Construction and Materials Bureau, Iowa Department of Transportation, October 2011. (Available on the Internet at: http://www.iowadot.gov/erl/current/IM/navigation/index_number.htm)

Construction and Materials Bureau. *Steel Piles, Instructional Memorandum 467.* Ames: Construction and Materials Bureau, Iowa Department of Transportation, October 2011. (Available on the Internet at: http://www.iowadot.gov/erl/current/IM/navigation/index_number.htm)

Construction and Materials Bureau. *Welded and Seamless Steel Pipe Piles, Instructional Memorandum 467.03.* Ames: Construction and Materials Bureau, Iowa Department of Transportation, October 2011. (Available on the Internet at: http://www.iowadot.gov/erl/current/IM/navigation/index_number.htm)

Roling, M., S. Sritharan, and M. Suleiman. *Development of LRFD Procedures for Bridge Pile Foundations in Iowa – Volume I: An Electronic Database for Pile Load Tests in Iowa (PILOT-IA).* Ames: Institute for Transportation, Iowa State University, 2010. (Available on the Internet at: http://publications.iowa.gov/13624/)

Sunday, Wayne and Kyle Frame. *New Bridge Construction Handbook.* Ames: Construction and Materials Bureau, Iowa Department of Transportation, 2000. (Available on the Internet at: http://www.iowadot.gov/construction/structures/bridge_construction_handbook.pdf)

6.2.7 Loads

Pile loads must be considered with respect to the substructure component supported by the piles. Abutment and pier articles [BDM 6.5 and 6.6] cover additional load topics, and the designer should review those articles in addition to the articles below.

For standard abutment, footing, and pile cap details the Bureau assumes axial vertical loads transmitted to piles. If nonstandard pile head details cause significant eccentricity or moment, the designer shall consider those effects in design.

When lateral loads are applied to piles the designer shall consider both lateral forces and lateral displacements [BDM 6.2.4.5].

6.2.4.2 Dynamic load allowance

[AASHTO-LRFD 3.6.2.1]

The AASHTO LRFD Specifications [AASHTO-LRFD 3.6.2.1] note that the dynamic load allowance (IM) need not be applied to foundation components that are entirely below ground level and in full contact with soil. As a conservative design simplification, the Bureau requires the designer to include the dynamic load allowance for the entire length of a pile that has a portion unsupported by soil, such as a pile in a pile bent or an integral abutment pile in a prebored hole filled with bentonite slurry.

However, the designer shall not include the dynamic load allowance on a stub abutment pile in a prebored hole. Because scour generally is a temporary condition the designer also should not include dynamic load allowance on a pile being checked under scour conditions.

6.2.4.2 Downdrag

Downdrag generally occurs at abutments when placement of approach fill causes settlement of compressible soils below the fill. Downdrag may be avoided if the embankment can be placed a sufficient time before abutment piles are driven and, in that case, the designer shall include CADD Note E175/M175 [BDM 13.3.2] on the plans with a minimum time period determined by the Soils Design Unit.

If abutment piles must be placed before the approach fill settlement has occurred, the designer shall consider downdrag forces as directed by the Soils Design Unit for soils that are labeled compressible in the soils package for the bridge project. Downdrag forces are caused by negative skin friction and add to the pile loads, as well as eliminate positive friction bearing in the downdrag zone. Downdrag forces may be reduced by use of prebored holes with bentonite fill.

Large downdrag forces at abutments with steel H-piles designed for Structural Resistance Level 1 (SRL-1) [BDM 6.2.6.1] often require significantly more piles or larger piles than similar abutments which do not need to be designed for downdrag. In order to mitigate the effects of downdrag on the number and/or size of steel H-piles at abutments to some degree, the Bureau allows designers to increase the SRL-1 nominal structural resistances in BDM Table 6.2.6.1-1 by 25%. The 25% increase applied to SRL-1 essentially creates SRL-1.5 which is halfway between SRL-1 and SRL-2. [For example, the nominal structural resistance for a typical Grade 50 HP 10x57 pile in BDM Table 6.2.6.1-1 would increase from a SRL-1 value of 243 k to a SRL-1.5 value of 304 k.] The total factored axial compression load shall not exceed the factored structural resistance of SRL-1 and the total factored axial compression load plus the factored downdrag load shall not exceed the factored structural resistance of SRL-1.5.

Downdrag forces shall be determined from the nominal geotechnical resistance chart for friction bearing [BDM Table 6.2.7-2] in accordance with policy in a subsequent article [BDM 6.2.4.3].

Battered piles shall not be used if downdrag will occur.

6.2.8 Load application

6.2.4.2 Load modifier

[AASHTO-LRFD 1.3.2, 3.4.1]

Load factors shall be adjusted by the load modifier, which accounts for ductility, redundancy, and operational importance [AASHTO-LRFD 1.3.2, 3.4.1]. For typical pile foundations the load modifier shall be taken as 1.0.

6.2.4.2 Limit states

[AASHTO-LRFD 3.4.1, 3.4.2]

For a typical pile foundation, the designer shall consider the following load combinations for the supported structural component, as applicable [AASHTO-LRFD 3.4.1]. For design of abutment foundations the designer should use judgment to exclude any combinations that will not control.

- Strength I, superstructure with vehicles but without wind
- Strength III, superstructure with design 3-second gust wind speed at 115 mph
- Strength V, superstructure with vehicles and with design 3-second gust wind speed at 80 mph
- Extreme Event II, superstructure with reduced vehicles and vehicular collision, ice, or hydraulic events
- Service I, superstructure with vehicles and with design 3-second gust wind speed at 70 mph

In general the designer need not investigate Service I limit state unless settlement, lateral movement, or overall stability is a concern. Overall stability will be analyzed by the Soils Design Unit as needed.

Except for unusual situations, such as eccentric loads during staged construction, the designer need not investigate construction load combinations [AASHTO-LRFD 3.4.2].

Design of the pile foundation shall be based on the resulting critical combinations including maximum axial force, maximum moment, and maximum shear.

6.2.4 Analysis and design

Pile section and contract length shall be determined by the load and resistance factor design (LRFD) method as modified in this and other manual sections, considering structural resistance, geotechnical resistance, target driving resistance, and other design considerations applicable to the pile foundation design [BDM 6.2.1.1].

- **Structural resistance:** To determine the required pile section and/or number of piles for typical pier and abutment design, the designer shall compare the factored axial load per pile or per pile group with the factored nominal structural resistance. Specific guidelines for structural design by pile type are given in a subsequent article [BDM 6.2.6], and guidelines for integral abutment piles are given in the abutment section [BDM 6.5.1.1.1]. Piles that extend above ground such as those in pile bents either need to be selected in accordance with the P10L standard or need to be checked structurally for the column condition considering scour using the guidelines given in this manual [BDM 6.6.4.2]. Pier piles subject to scour need to be checked for the column condition below the footing [BDM 6.6.4.1.3.1].
- **Geotechnical resistance:** To determine the required contract pile length the designer shall compare the factored axial load per pile with the factored nominal geotechnical resistance determined from the charts [BDM Table 6.2.7-1 and 6.2.7-2]. Geotechnical resistance factors are dependent on the method of construction control and are given after the charts [BDM 6.2.9]. Additional pile length guidelines are given below [BDM 6.2.4.1]. Pier piles subject to scour need to be checked for the loss of soil support [BDM 6.6.4.1.3.1].
- **Target driving resistance:** The designer also shall determine the target nominal driving resistance based on the method of construction control, which usually will be WEAP for state projects [BDM 6.2.4.6]. Depending on the general soil type in contact with the pile, the designer also will need to specify one or more nominal retap resistances.

Specific steps in the overall design and construction process for typical bridges are outlined below and followed in design examples. The steps may be modified depending on Bureau practice and bridge project.

(1) Develop bridge situation plan (or TS&L, Type, Size, and Location).
(2) Develop soils package, including soil borings and foundation recommendations.
(3) Determine pile layout, pile loads including downdrag, and other design requirements. This step includes structural checks.
(4) Estimate nominal geotechnical resistance for friction and end bearing.
(5) Select resistance factor(s) to estimate pile length based on the soil profile and construction control.
(6) Calculate required nominal pile resistance, R_n.
(7) Estimate contract pile length, L, considering downdrag, scour, pile uplift, lateral loading, and unbraced length, if applicable.
(8) Estimate target nominal pile driving resistance, $R_{ndr\text{-}T}$.

(9) Prepare CADD notes for bridge plans.
(10) Check the design.
(11) Request and check contractor's hammer data, and prepare bearing graph for WEAP control or other necessary items for alternate methods of construction control.
(12) Observe construction, record driven resistance, and resolve any construction issues.

6.2.4.1 Foundation layout

[AASHTO-LRFD 10.7.1.2]

For each foundation the designer should attempt to use the minimum number of piles required for structural support. Individual pile layouts for each foundation are preferred for typical bridges, and the designer should not add extra piles to replicate foundations unless there is a definite advantage such as cost and/or time savings for accelerated bridge construction.

The maximum centerline pile spacing for abutments and pile bents shall be 8 feet. The minimum centerline pile spacing shall be the larger of 2.5 feet or 2.5 times the pile size [AASHTO LRFD 10.7.1.2]. Based on soil conditions and additional guidelines below, piles shall be spaced at a centerline distance that does not exceed the maximum or minimum limits. The minimum centerline distance to a footing edge shall be 1.5 feet.

The minimum number of piles for an integral abutment shall be one pile per beam plus one pile per wing extension.

For integral abutments the Bureau requires that all piles be driven vertically, but for all other substructure elements the designer should batter some of the piles as indicated on standard sheets. Semi-integral abutments are typically supported on two rows of piles battered outward at a 1 horizontal to 6 vertical slope (1:6 batter) however designers may elect to design semi-integral abutments with a single row of vertical piles. Typically, the front row and wing wall piles for stub abutments, the perimeter piles for frame or T-pier footings, and the end piles for pile bents should be battered. The preferred batter for stub abutments and piers is 1:4, with 1:6 as an acceptable alternative, and the preferred batter for pile bents is 1:12. Normally battered piles shall be oriented such that any soil settlement will be resisted by strong-axis pile bending. The designer shall check battered piles for interference with temporary structures such as cofferdams, as well as for permanent obstructions such as utility lines and foundations.

When a mechanically stabilized earth (MSE) retaining wall is placed in front of integral abutment piles, the piles typically are to be sleeved with corrugated metal pipe (CMP). For compaction of the fill between the sleeves and placement of the metal strip reinforcing for the wall, a minimum sleeve clear distance of 24 inches is preferred. With the typical 24-inch diameter CMP and a 24-inch clear distance, the centerline pile spacing will be 4 feet. Therefore, the designer needs to consider the minimum pile spacing carefully for integral abutments behind MSE walls.

For integral abutments the Bureau also requires a minimum of 36 inches clear between the back of the MSE wall and the face of the CMP sleeves. The clearance is intended to permit compaction of the backfill, to avoid sharp angles in the reinforcing straps, and to prevent the bentonite in the CMP sleeves from freezing. For semi-integral and stub abutments the clear distance may be less than 36 inches subject to requirements of the MSE wall vendor. When the MSE wall is built in two stages and/or when utility lines are in the backfill zone the designer shall determine clearances based on discussions with the MSE wall vendor.

6.2.4.2 Pile length

[AASHTO-LRFD 10.7.1.3, 10.7.3.9]

In addition to the basic geotechnical resistance check at the strength limit state [BDM 6.2.4.3], any applicable uplift considerations [BDM 6.2.4.4], and any applicable lateral load considerations [BDM 6.2.4.5], contract pile length will depend on various site and substructure factors. The design penetration for any pile should be a minimum of 10 feet into hard cohesive or dense granular soil and a minimum of 20 feet into soft cohesive or loose granular soil. Piles driven through embankments should penetrate 10

feet into original ground unless refusal on bedrock or a competent layer occurs at a lesser elevation [AASHTO-LRFD 10.7.1.3]. Piles subject to uplift shall be driven the minimum length to ensure adequate geotechnical tension resistance.

In order to relieve stresses due to lateral movement, piles for integral abutments for bridges longer than 130 feet shall be driven in prebored holes. Abutment piles also may be driven in prebored holes to reduce downdrag due to settlement of the abutment berm. Guidelines for prebored hole depths are given in Table 6.2.4.2-1.

Table 6.2.4.2-1. Prebored hole depths for abutments

Abutment type	Hole depth feet	Comments
Integral	10	Standard depth
Integral	15	Maximum depth without approval of supervising Unit Leader
Semi-integral and Stub	20	Maximum depth without approval of supervising Unit Leader

Pile length shall be determined so that the geotechnical resistance due to friction, end bearing, or a combination of friction and end bearing will be achieved below the lowest of the following elevations:

- Bottom of predrilled hole (abutments) [BDM Tables 6.2.4.2-1, 6.5.1.1.1-1, and 6.5.1.1.1-2],
- Bottom of compressible fill when berm consolidation delays are not permissible (abutments),
- Bottom of pile encasement (pile bents) [BDM 6.6.4.2.2],
- Design scour elevation (piers) [BDM 6.6.4.1.3.1], or
- Check scour elevation (piers) [BDM 6.6.4.1.3.1].

Additional considerations for determining the pile length are the following.

- Natural or original ground elevation is the average natural ground elevation along the longitudinal centerline of the foundation.
- Heads of piles shall be embedded in abutments, footings, bent caps, and pier caps the length given in the pile detailing article [BDM 6.2.5].
- The heads of steel H-piles, steel pipe piles, and timber piles shall be trimmed one foot to account for driving damage.
- If fill is placed above a compressible soil layer, such as at an abutment, piles will be subjected to downdrag forces that need to be included in design.
- The bentonite slurry [IDOT SS 2501.03, Q] required for filling of a prebored hole for a pile shall be assumed to provide no vertical or lateral support to the pile. The slurry also shall be assumed to cause no downdrag forces.
- A pile battered no more than 1 horizontal to 4 vertical may be assumed to carry the same vertical load as a pile driven vertically; there need be no reduction for angle of the pile.
- If several pile types or sizes are feasible, the designer should discuss the alternatives with the supervising Unit Leader. Determining the best or most economical alternative involves pile availability and cost, driving equipment availability and cost, and structural factors.
- For steel H-piles and timber piles, length shall round up to the nearest 5-foot increment. For prestressed concrete piles, length shall round up to the nearest 1-foot increment, except that pile extensions shall round up to the nearest 5-foot increment.
- To determine an end bearing resistance value [BDM Table 6.2.7-1] the designer should average the N_{60}-values over a distance eight feet above and below the pile tip.
- If a pile is designed with end bearing resistance in soil the pile shall be driven a minimum of 5 feet into the layer. The designer also shall ensure that the pile tip will not punch through the bearing layer into a weaker layer.
- If an H-pile is designed with end bearing resistance in bedrock the pile may penetrate the bedrock as indicated in Table 6.2.4.2-2. The pile contract length should include enough

additional length to accommodate potential penetration into bedrock. Prestressed concrete and steel pipe piles should be driven to bedrock only with approval of the Soils Design Unit. Timber piles shall not be driven to bear on bedrock.

Table 6.2.4.2-2. Potential H-pile penetration into bedrock

Rock classification	Potential penetration, feet
Broken limestone	8 - 12
Shale or firm shale	8 - 12
Medium hard shale, hard shale, or siltstone with 50 ≤ N ≤ 200	4 - 8
Sandstone, siltstone, or shale with N ≥ 200	3
Solid limestone	1 - 3

- In the unusual case that a frame pier or T-pier pile foundation meets all three of the following conditions the designer shall evaluate the axial friction resistance for the piles with the appropriate group efficiency reduction factor [AASHTO LRFD 10.7.3.9].
  (a) The footing is not in contact with the ground, or scour may remove soil below the footing.
  (b) Piles are in cohesive soil and the soil near the surface below the footing has unconfined shear strength less than 2 ksf (which approximately correlates with N-values less than 16).
  (c) The footing has no battered piles.
  - If less than 1.0, the efficiency factor will increase pile length or require redesign of the foundation. The efficiency factor does not apply to typical integral abutments, stub abutments, pile bents, frame pier foundations with battered piles, and T-pier foundations with battered piles. (See the Commentary for this article for further information regarding this policy.)
- Pile group efficiencies in cohesive soil are known to be reduced for a time period after driving due to excess pore water pressure. If accelerated bridge construction (ABC) requires that piles in cohesive soil are loaded very soon after driving the designer shall investigate the need for lengthening piles or otherwise redesigning the foundation.

6.2.4.3 Contract length

[AASHTO LRFD 10.7.3.9]

Because resistance factors will vary with the method of construction control the designer will need to select the control method before determining the pile contract length. The WEAP method is used for typical state projects, and Iowa counties and cities may use either WEAP or the Iowa DOT ENR Formula modified for LRFD. For large and special projects other methods of construction control are available [BDM 6.2.9].

Contract pile length for downward load shall be determined by using the soil categories [BDM 6.2.8], LRFD nominal geotechnical resistance charts [BDM 6.2.7], and resistance factors [BDM 6.2.9]. Depending on subsurface conditions, the pile resistance may be the

- accumulated skin friction resistance through several soil layers,
- the end bearing resistance in a dense soil layer or rock, or
- the accumulated skin friction resistance plus end bearing resistance in a dense soil layer or rock.

The basic LRFD relationship used to determine the contract length for an individual pile is the following:

$$\Sigma\eta\gamma Q + \gamma_{DD}DD \leq \varphi R_n$$

It is rearranged for design to:

$$R_n \geq (\Sigma\eta\gamma Q + \gamma_{DD}DD)/\varphi$$

Where:

R_n = nominal geotechnical resistance determined from unit values for friction [BDM Table 6.2.7-2] and/or end bearing [BDM Table 6.2.7-1]. In the case of downdrag or scour the nominal resistance above the downdrag elevation or scour elevation shall be neglected.

For frame pier or T-pier pile foundations with a gap below the footing, with piles in soft cohesive soil, and without battered piles [BDM 6.2.4.2], the designer shall multiply the nominal geotechnical friction resistance (but not the end bearing resistance) by the appropriate group efficiency reduction factor [AASHTO LRFD 10.7.3.9]. This case or a case where piles in cohesive soil are spaced less than 2.5 diameters or 2.5 feet apart also requires the designer to check the equivalent pier resistance [AASHTO LRFD 10.7.3.9].

$\Sigma\eta\gamma Q$ = total factored axial compression load per pile determined by usual LRFD procedures for a strength limit state, kips. If the pile resistance is partially due to end bearing on rock the $\Sigma\eta\gamma Q$ term needs to be split so that the fraction due to end bearing (R_{EB}/R_n) is divided by $\varphi = 0.70$ and the fraction due to friction bearing (R_{FB}/R_n) is divided by the appropriate φ from BDM Table 6.2.9-1. The formula then becomes:

$$R_n \geq (R_{EB}/R_n)\Sigma\eta\gamma Q/0.70 + (R_{FB}/R_n)\Sigma\eta\gamma Q/\varphi + \gamma_{DD}DD/\varphi$$

γ_{DD} = downdrag load factor = 1.0

DD = downdrag load. The load is determined from friction bearing values [BDM Table 6.2.7-2]. If there is no downdrag this term is taken as zero.

φ = geotechnical resistance factor selected from information given in BDM Table 6.2.9-1 for the site soil category and method of construction control

Examples for determining contract length are given in LRFD Pile Design Examples ~ 2016 [BDM 6.2.1.5]. The Track 1 examples cover typical projects on the state highway system with WEAP construction control. Track 2 examples cover local agency projects that use Iowa DOT ENR Formula control. Track 3 examples cover special cases of construction control that may occur on large and unusual projects.

After contract length and other features of design are determined the designer should communicate the design on the plans using CADD Notes E818 and E819 for abutment piles and E718 and E719 for pier piles [BDM 13.8].

6.2.4.4 Uplift

Under all limit states the designer may consider uplift on piles provided that piles are sufficiently anchored in the footing and have sufficient soil-to-pile friction resistance for the uplift force. Resistance between footing concrete and an H-pile and resistance factors are discussed in the steel H-pile article [BDM 6.2.6.1].

The designer shall check the geotechnical resistance to uplift for piles in tension as follows:

$$R_{n\text{-}UP} \geq \Sigma\eta\gamma Q/\varphi_{UP}$$

Where:

$R_{n\text{-}UP}$ = nominal geotechnical resistance determined from unit values for friction [BDM Table 6.2.7-2]

$\Sigma\eta\gamma Q$ = total factored axial tension load per pile determined by usual LRFD procedures for a strength limit state, kips.

φ_{UP} = geotechnical resistance factor selected from information given in BDM Table 6.2.9-2 for the site soil category and method of construction control

If the check is successful the designer shall determine the minimum required length of pile to resist the uplift load and include that minimum length on the plans in the appropriate CADD Note, E819 or E719 [BDM 13.8.2].

Track 1, Example 4 in LRFD Pile Design Examples ~ 2016 [BDM 6.2.1.5] is written for a case that involves uplift on a steel H-pile.

6.2.4.5 Lateral load

[AASHTO-LRFD 10.7.2.4]

For typical bridge piers and stub abutments supported on steel H-piles or timber piles the designer may check lateral loading of piles at the service and strength limit states using traditional nominal resistances given in following articles [BDM 6.2.6.1, 6.2.6.3]. Piles in typical integral abutments that meet the conditions given in the abutment section [BDM 6.5.1.1.1] need not be checked for lateral load.

If the checks using nominal values fail or if the pile conditions require further analysis, the Bureau prefers that the designer use the program LPILE or equivalent software to check deflection at the service limit state and moment and shear at the strength and extreme event limit state. Group effects shall be considered [AASHTO-LRFD 10.7.2.4].

If using LPILE to check pier or stub abutment piles for typical bridges, the designer may assume a maximum service limit state lateral deflection of 0.25 inch for a single pile or 0.75 inch for a pile group. Lateral deflection at the top of a pier should be limited to 1.50 inches. If these limits are exceeded the designer shall consult with the supervising Unit Leader.

See the commentary for a background discussion [BDM C6.2.4.5] and steel H-pile examples [BDM C6.2.6.1].

6.2.4.6 Target driving resistance

The designer shall determine the target nominal driving resistance that will be used in the field to ensure adequate pile bearing resistance. In the case of cohesionless or mixed soils with WEAP control [BDM 6.2.8] or all soils with Iowa DOT ENR Formula control a single target driving resistance shall be used at end of drive (EOD) and for retaps one or more days after EOD.

$$\mathbf{R_{ndr\text{-}T} \geq (\Sigma\eta\gamma Q + \gamma_{DD}DD)/\varphi_{TAR} + R_{SCOUR} + R_{Sdd}}$$

Where:

$\mathbf{R_{ndr\text{-}T}}$ = nominal target driving resistance at a defined time. $R_{ndr\text{-}EOD}$ is the target driving resistance at EOD; $R_{ndr\text{-}1}$ is the target driving resistance at one day, etc. For cohesionless and mixed soil with WEAP control and all soils with Iowa DOT ENR Formula control R_{ndr} will not vary with time: $R_{ndr\text{-}EOD} = R_{ndr\text{-}1} = R_{ndr\text{-}3}$ …

$\mathbf{\Sigma\eta\gamma Q}$ = total factored axial compression load per pile determined by usual LRFD procedures for a strength limit state, kips.

γ_{DD} = downdrag load factor = 1.0

DD = downdrag load. The load is determined from friction bearing values [BDM Table 6.2.7-2]. If there is no downdrag this term is taken as zero.

φ_{TAR} = target driving resistance factor selected from information given in BDM Table 6.2.9-3 for the site soil category and method of construction control

$\mathbf{R_{SCOUR}}$ = nominal friction resistance for the soil that is subject to scour determined from unit values for friction [BDM Table 6.2.7-2]

$\mathbf{R_{Sdd}}$ = nominal side friction resistance that must be overcome during driving through downdrag zone. $\mathbf{R_{Sdd}}$ is equal in magnitude to **DD** but opposite in direction.

In the case of H-piles and cohesive soils with WEAP construction control the designer shall consider the benefit of setup in the determination of the target driving resistance except in the following cases:

- Piles driven to bedrock,
- Piles subjected to downdrag,
- Piles in contact with cohesive soil with an overall average N of less than 5, and
- Piles used in accelerated bridge construction.

When setup is considered designers will need to determine multiple target driving resistances because setup will increase resistance with time. (Do not use this procedure for other pile types, mixed or cohesionless soils, or Iowa DOT ENR Formula construction control.) The setup increase, however, is limited by φ_{EOD} as indicated below.

The relationship to determine target driving resistance at EOD for H-piles and cohesive soil with WEAP control is as follows:

$$R_{ndr\text{-}EOD} \geq (\Sigma\eta\gamma Q + \gamma_{DD}DD)/\varphi_{TAR} + R_{SCOUR} + R_{Sdd}$$

Where:

$$\varphi_{TAR} = \varphi_{EOD} + \varphi_{SETUP}(F_{SETUP\text{-}7}-1) \leq 1.0$$

φ_{EOD} and φ_{SETUP} are taken from BDM Table 6.2.9-3, and $F_{SETUP\text{-}7}$ is taken from the 7-day curve in Figure 6.2.10 based on the average SPT N_{60}-value, N_a , determined as discussed in BDM 6.2.10.

$R_{ndr\text{-}1}$ for retap at one day is the smaller of:

$$(\Sigma\eta\gamma Q + \gamma_{DD}DD)/\varphi_{EOD} + R_{SCOUR} + R_{Sdd}$$

and

$$(R_{ndr\text{-}EOD})(F_{SETUP\text{-}1})$$

Where $F_{SETUP\text{-}1}$ is taken from the 1-day curve in Figure 6.2.10

$R_{ndr\text{-}3}$ for retap at three days is the smaller of:

$$(\Sigma\eta\gamma Q + \gamma_{DD}DD)/\varphi_{EOD} + R_{SCOUR} + R_{Sdd}$$

and

$$(R_{ndr\text{-}EOD})(F_{SETUP\text{-}3})$$

Where $F_{SETUP\text{-}3}$ is taken from the 3-day curve in Figure 6.2.10

$R_{ndr\text{-}7}$ for retap at seven days is determined in a similar way.

For H-pile retaps in cohesive soils the first of the two retap quantities, which is not based directly on setup, often will limit the target driving resistance for all retaps one day and later. In that case the designer will need to specify only a nominal driving target for EOD and a second nominal driving target for retap at one or more days. In unusual cases the designer may need to specify three nominal driving targets, one for EOD, one for one-day retap, and one for three-day or more retap.

Examples for determining target driving resistance are given in LRFD Pile Design Examples [BDM 6.2.1.5]. The Track 1 examples cover typical projects on the state highway system with WEAP construction control. Track 2 examples cover local agency projects that use Iowa DOT ENR Formula control. Track 3 examples cover special cases of construction control that may occur on large and unusual projects.

After target driving resistance and other features of design are determined the designer should communicate the design on the plans using CADD Notes as follows:

- Abutment notes E818 and E819 [BDM 13.8.2], and
- Pier notes E718 and E719 [BDM 13.8.2].

Except in unusual cases the pile driving sequence will be governed by the Construction and Materials Bureau Construction Manual, Article 11.22.

6.2.5 Detailing

Piles shall be embedded in substructure elements and shall have the head reinforcing listed in Table 6.2.5.

Table 6.2.5. Minimum pile embedment and pile head reinforcing

Substructure element	Minimum embedment	Pile head reinforcing
Integral abutment for A or B pretensioned prestressed concrete beams (PPCBs)	2 feet	Spiral (1)
Integral abutment for C, D, BTB, BTC, BTD, or BTE pretensioned prestressed concrete beams (PPCBs)	2 feet	Spiral (1) and bent p bars (2)
Integral abutment for steel plate girders	2 feet	Spiral (1) (3) and bent p bars (2) (3)
Stub abutment on timber piles	2 feet	Spiral (3)
Stub abutment on steel H-piles	2 feet	None (4)
Frame pier or T-pier footing	1 foot	None (3)
Continuous concrete slab pile bent cap (not monolithic with slab)	1.5 feet	None (3)
Continuous concrete slab pile bent cap (monolithic with slab)	1 foot	Cap steel (bent dowels) (5)

Table notes:

(1) Spiral is placed around each pile head as detailed on standard sheets [OBS SS 2078-2091]. The spiral should not be epoxy coated.
(2) For the bent p bars see the Abutment Pile Plan on standard sheets [OBS SS 2085-2091].
(3) No standard sheet is available.
(4) See standard sheets for C or D beams [OBS SS 2092-2105].
(5) Cap steel (bent dowels) is detailed on a standard sheet [OBS SS P10L].

For pier footings with reinforcing placed directly above H-pile, pipe pile, or timber pile heads, plans shall include a note requiring that all battered piles be trimmed to a horizontal line to aid in placement of reinforcement. Prestressed concrete piles should not be trimmed.

For projects involving the Excavate and Dewater bid item the E832 (M832) CADD Note [BDM 13.8.2] shall be included on the plans.

6.2.6 Guidelines by pile type

For information on selecting pile type for integral abutments see the guidelines in the integral abutment article [BDM 6.5.4.1.1].

6.2.6.1 Steel H

[AASHTO-LRFD 6.5.4.2, 10.5.5.3.3]

Steel H-piles are feasible in most Iowa soils and may attain geotechnical resistance through end bearing, friction bearing, or a combination of end and friction bearing.

Steel H-piles shall be of material meeting ASTM A 572/A 572M Grade 50 [IDOT SS 4167.01, A, OM IM 467.01], unless an exception is approved by the supervising Unit Leader.

The basic structural check for typical integral abutment, stub abutment, and pier H-piles is given below. The check represents an axial force condition at the bottom of a pile, with consideration of the potential for driving damage.

$$\Sigma\eta\gamma P + \gamma_{DD}DD \leq n\varphi_c P_n$$

$\Sigma\eta\gamma P$ = total factored axial load per pile or per pile group determined by usual AASHTO LRFD procedures for a strength limit state, kips

γ_{DD} = downdrag load factor = 1.0

DD = downdrag load. The load is determined from friction bearing values [BDM Table 6.2.7-2]. If there is no downdrag this term is taken as zero

n = number of piles

φ_c = 0.6 for normal driving. For unusually severe driving conditions requiring driving points the Soils Design Unit in consultation with the Chief Structural Engineer may recommend φ_c = 0.5 [AASHTO-LRFD 6.5.4.2].

P_n = nominal pile structural resistance at the strength limit state, kips. Structural resistances for H-piles are given in Table 6.2.6.1-1.

In order to fit LRFD H-pile design to previous practice under the AASHTO Standard Specifications, four Structural Resistance Levels (SRLs) are defined as follows.

- Structural Resistance Level – 1 (SRL-1) is the resistance based on an average load factor, γ, of 1.45, an allowable stress of 6 ksi, and a resistance factor, φ_c, of 0.6. SRL-1 shall be used for abutment or pier piles with the following conditions.
    - H-piles that tip out in soils such as alluvial, loess, and similar soils and are designed for friction only.
    - H-piles that tip out in soil and are designed for friction and end bearing supported by good-quality glacial clays.
    - H-piles that are driven into rock and are designed for end bearing on rock such as shale and weathered limestone with consistent average N of at least 100.
- Structural Resistance Level – 2 (SRL-2) is the resistance based on an average load factor, γ, of 1.45, an allowable stress of 9 ksi, and a resistance factor, φ_c, of 0.6. SRL-2 shall be used for abutment or pier piles with the following conditions.
    - H-piles that are driven into rock and are designed for end bearing on uniform rock such as medium hard to hard limestone or similar material with consistent N of at least 200.
    - H-piles that tip out in soil and are designed for friction and end bearing with at least 50 feet of penetration into good-quality glacial clays, with approval of the Soils Design Unit. Good-quality glacial clay, in this instance, is defined as glacial clays with at least double-digit blow counts.
    - H-piles that are driven into rock and are designed for a combination of friction and end bearing on rock with an N of 100 to 200, with approval of the Soils Design Unit. The allowable stress of 9 ksi is typically achieved from 3 ksi of skin friction in good-quality soils above the rock and from 6 ksi in end bearing on rock.
- Structural Resistance Level -- 3 (SRL-3) is the resistance based on an average load factor, γ, of 1.45, an allowable stress of 12 ksi, and a resistance factor, φ_c, of 0.6. SRL-3 shall be used only for pier piles with the following conditions.
    - H-piles that are driven into rock and are designed for end bearing on uniform good-quality rock such as medium hard to hard limestone with consistent and uniform N of at least 200, with drivability analysis during design and with approvals of the Soils Design Unit and the Assistant Bridge Engineer.
    - H-piles that are driven into rock and are designed for a combination of friction and end bearing on rock with an N of at least 200, with drivability analysis during design and with approvals of the Soils Design Unit and the Assistant Bridge Engineer. The allowable stress of 12 ksi is typically achieved from 3 to 6 ksi of skin friction in good-quality soils above the rock and from 6 to 9 ksi in end bearing on rock.
- Structural Resistance Level -- 4 (SRL-4) is the resistance based on an average load factor, γ, of 1.45, an allowable stress of 15 ksi, and a resistance factor, φ_c, of 0.6. SRL-4 shall be used only for pier piles with the following conditions.
    - H-piles that are driven into rock and are designed for end bearing on uniform and consistent high-quality rock such as medium hard to hard limestone with consistent and uniform N of at least 200 that has been cored and tested sufficiently to verify the rock's

consistency and suitability (minimum recovery of 90% and minimum RQD of 80%), with drivability analysis during design and with approvals of the Soils Design Unit and the Assistant Bridge Engineer. This option is allowed only on sites with no known environmental problems, and where corrosion and deterioration considerations as detailed in AASHTO LRFD Article 10.7.5 have been addressed, with design-phase corrosion testing on the soil and rock supporting layers performed as applicable. Construction-phase PDA testing is required. Lateral load analysis through the overburden soils must be performed and produce acceptable results. A design-phase pile load test at each site should be considered. This option is considered appropriate primarily on large-scale projects where significant cost savings could be realized over SRL-3. The aforementioned cost savings do not consider the costs of the additional testing required for SRL-4.

The geotechnical resistances for end bearing in bedrock in Table 6.2.7-1 are correlated to SRL-1 and SRL-2. The nominal geotechnical resistance of 12 ksi for bedrock with N of 100 to 200 corresponds with the SRL-1 limit. The nominal geotechnical resistance of 18 ksi for bedrock with N greater than 200 corresponds with the SRL-2 limit. H-pile designs based upon SRL-3 and SRL-4 require Soils Design Unit approval of nominal geotechnical resistances for end bearing in bedrock of 24 ksi and 30 ksi, respectively. The SRL-3 and SRL-4 values are not included in Table 6.2.7-1 since they require additional evaluation by the Soils Design Unit before being used.

At the four SRLs, Table 6.2.6.1-1 gives the nominal structural resistances for typical H-pile sections.

Table 6.2.6.1-1. Nominal structural resistance for typical Grade 50 H-piles (1)

H-pile section	Nominal Structural Resistance Level – 1, P_n, kips (2) (6)	Nominal Structural Resistance Level - 2, P_n, kips (3) (6)	Nominal Structural Resistance Level - 3, P_n, kips (4) (6)	Nominal Structural Resistance Level - 4, P_n, kips (5) (6)
HP 10x42	179	269	359	449
HP 10x57	243	365	487	605
HP 12x53 (7)	224	337	449	561
HP 14x73 (7)	310	465	620	775
HP 14x117	498	748	997	1247

Table notes:

(1) The designer may select H-pile sections not given in the table but shall check availability for those sections.
(2) These values were calculated from 1.45*6 ksi*A/0.6, which simplifies to 14.50*A or f_nA.
(3) These values were calculated from 1.45*9 ksi*A/0.6, which simplifies to 21.75*A or f_nA.
(4) These values were calculated from 1.45*12 ksi*A/0.6, which simplifies to 29.00*A or f_nA.
(5) These values were calculated from 1.45*15 ksi*A/0.6, which simplifies to 36.25*A or f_nA.
(6) If the Soils Design Unit and Chief Structural Engineer recommend $\varphi_c = 0.5$, these tabulated values should not be increased because the intent of the lower φ_c is to increase the number of piles.
(7) Because of slender flanges these sections are not to be used for integral abutments.

Large downdrag forces at abutments with steel H-piles designed for SRL-1 often require significantly more piles or larger piles than similar abutments which do not need to be designed for downdrag. In order to mitigate the effects of downdrag on the number and/or size of steel H-piles at abutments to some degree, the Bureau allows designers to increase the SRL-1 nominal structural resistances in BDM Table 6.2.6.1-1 by 25%. The 25% increase applied to SRL-1 essentially creates SRL-1.5 which is halfway between SRL-1 and SRL-2. [For example, the nominal structural resistance for a typical Grade 50 HP 10x57 pile in BDM Table 6.2.6.1-1 would increase from a SRL-1 value of 243 k to a SRL-1.5 value of 304 k.] The total factored axial compression load shall not exceed the factored structural resistance of SRL-1 and the total factored axial compression load plus the factored downdrag load shall not exceed the factored structural resistance of SRL-1.5.

In unusual cases where piles are subjected to significant moment or eccentric load or where piles extend above ground such as in a pile bent [BDM 6.6.4.2] the piles also need to be checked structurally at or near their tops. Piles subject to scour need to be checked structurally as columns below footings [BDM 6.6.4.1.3.1].

The geotechnical design to determine pile contract length shall follow the procedures in this manual [BDM 6.2.4].
In cases where piles are projected to achieve sufficient geotechnical resistance within 5 feet of bedrock the designer should consider driving the piles to rock.

Steel H-piles driven to bedrock may penetrate the surface of the rock to depths listed in Table 6.2.4.2-2, therefore, the contract pile length shall include enough additional length to accommodate the potential penetration.

The designer should use approved driving points [OM IM No. 468] when recommended by the Soils Design Unit. Generally the Unit recommends driving points if H-piles must be driven through soil layers containing boulders or if H-piles must be driven to sloping bedrock surfaces. Verify the need for driving points with the Soils Design Unit. If points are needed, include on the plans CADD Note E722 or E821 [BDM 13.8], whichever is appropriate.

There have been projects where the recorded blow counts in the soil borings have indicated a relatively thin hard layer of soil (e.g. 100 or more blows per foot) sandwiched between softer soil layers. In such cases, piles may reach refusal in the hard layer and cannot be driven through it without damaging the pile and/or the hammer. The long term geotechnical axial capacity of these shortened piles may be questionable, and, in some cases, the pile may be too short to develop enough tension and/or lateral capacity to meet the design demand. The designer should thoroughly review the boring logs and soils report for situations like this and discuss it with the Final Design Unit Leader and Soils Design Unit to determine whether pile points should be used or if an alternate foundation type, such as drilled shafts, may be preferable.

Although the LRFD specifications require reduction of the structural resistance factor, φ_c, to 0.50 when pile points are used [AASHTO-LRFD 6.5.4.2] the factor will ordinarily not be required. Unless the Soils Design Unit and Chief Structural Engineer recommend the lower resistance factor the designer shall use a structural resistance factor of 0.6. See the commentary for a discussion of the structural resistance factor [BDM C6.2.6.1].

At strength limit states, for checking uplift on a steel H-pile embedded 12 inches into a concrete footing, the designer shall use a nominal resistance of 100 kips per pile and $\varphi = 0.25$ for pile sizes HP 10 and greater. At the extreme event limit states, the designer shall use $\varphi = 0.40$. If the aforementioned resistance is insufficient for the factored load the designer shall consult with the supervising Unit Leader. The preferred alternative is to resize the footing, but another alternative is to anchor the pile head with positive anchorage such as that tested by Iowa State University [Iekel 2017].

If only the corner piles require additional anchorage, then the preferred positive anchorage for the corner piles shall consist of 24-inch pile embedment into the concrete footing so long as the pile footing is at least 4.0 feet thick with piles designed for axial compression not exceeding the SRL-2 limit. For the strength limit states, for checking uplift on the corner piles the designer shall use a nominal resistance of 175 kips per pile and $\varphi = 0.25$ for pile sizes HP 10 and greater. At the extreme event limit states, the designer shall use $\varphi = 0.40$. Other piles in the footing shall retain the typical 12-inch pile embedment. If this option is used the designer shall still set the bottom mat of reinforcing just above the piles with the 12-inch embedment. However, the designer will need to ensure the bottom reinforcement in both directions near the edges of the footing is spaced laterally to clear the corner piles, but that the reinforcement encompasses all 4 sides of the corner piles with 2 inches of clear cover. The bid length quantity for the 24-inch embedded corner piles shall be the same as for the other 12-inch embedded piles in the footing. The plans shall clearly indicate any corner piles with 24-inch embedment.

If any of the following are true: piles other than the corner piles also require anchors, the footing is less than 4.0 feet thick, or pile axial compression exceeds the SRL-2 limit; then the preferred positive anchorage shall consist of two 60 ksi V-shaped #8 bars placed through 1.25-inch diameter holes drilled or torched in the pile web. See details in BDM Figure C6.2.6.1-1. When checking uplift at the strength limit

states the designer shall use a nominal resistance of 87.5 kips for each #8 V-bar with φ = 0.25 (i.e. two #8 V-bars has a total nominal resistance of 175 kips). At the extreme event limit states, the designer shall use φ = 0.40. Using more than two V-bars or V-bars with a size greater than #8 shall be approved by the Chief Structural Engineer. No additional resistance based on pile embedment shall be added to the V-bar anchor resistance.

For checking uplift on a steel H-pile embedded in soil, the designer shall determine the pile resistance from the LRFD soils information chart for friction [BDM Table 6.2.7-2], neglecting any soil that may be lost due to scour or other site degradation. The designer shall apply a resistance factor for the appropriate limit state from Article 6.2.9.

In the absence of special analysis the designer may assume the lateral resistances given in Table 6.2.6.1-2. The assumed resistances are intended only for the head of a fully embedded pile.

Table 6.2.6.1-2. Assumed nominal lateral resistance per embedded H-pile

Service limit state resistance (1)	Strength or extreme event limit state resistance (1)
6 kips	18 kips

Table note:

(1) The designer may add the horizontal component of the resistance of a battered pile only if there is sufficient vertical load to develop the horizontal component.

See the commentary for a discussion of lateral loads [BDM C6.2.4.5] and for lateral load examples [BDM C6.2.6.1].

6.2.6.2 Concrete-filled steel pipe

Recently concrete-filled steel pipe piles have not been economical for typical Iowa bridges and have been used only at contractor request as a substitution for steel H-piles.

Steel pipe piles shall be of material meeting ASTM A 252 Grade 2 or Grade 3 [IDOT SS 4167.01, B, OM IM 467.03], unless an exception is approved by the supervising Unit Leader.

The structural design to determine the concrete-filled steel pipe pile section shall follow the AASHTO LRFD Specifications, and the geotechnical design to determine pile contract length shall follow the procedures in this manual [BDM 6.2.4]. Pipe piles should not be driven in soils with consistent N_{60}-values greater than 40.

Driving points may be needed for pipe piles in some soil conditions. The designer shall verify the need for driving points with the Soils Design Unit.

6.2.6.3 Timber

[AASHTO-LRFD 8.4.1.3, 8.4.4, 8.5.2.2]

Timber piles are considered feasible only in soils with N_{60}-values of 25 or less. Timber piles shall not be used in soils that contain boulders, and timber piles for support of bridge substructure components shall not be used for bearing on rock.

Timber piles for permanent foundations shall be treated and shall meet the requirements in the standard specifications [IDOT SS 4165].

A conservative structural check, calibrated to past practice for typical integral abutment [BDM 6.5.1.1.1], stub abutment, and pier piles is given below. The check works for an axial force condition at the tip of a pile, which generally is the most severe condition, assuming that the pile is end-bearing on the smallest cross section. If the pile derives some geotechnical resistance from friction the designer, with approval of the supervising Unit Leader, may check other locations in the pile in order to determine the critical section and increase the computed structural resistance of the pile. (See the commentary for additional discussion [BDM C6.2.6.3], and see Track 2, Example 2 given in LRFD Pile Design Examples ~ 2016

[BDM 6.2.1.5] for a design example. Note that the example uses construction control by the Iowa DOT ENR Formula but, for state projects, the WEAP method of control is required.)

$$\Sigma\eta\gamma P + \gamma_{DD} DD \leq n\varphi P_n$$

$\Sigma\eta\gamma P$ = total factored axial load per pile or per pile group determined by usual AASHTO LRFD procedures for a strength limit state, kips

γ_{DD} = downdrag load factor = 1.0

DD = downdrag load. The load is determined from friction bearing values [BDM Table 6.2.7-2]. If there is no downdrag this term is taken as zero

n = number of piles

φ = 0.9 for compression parallel to grain [AASHTO-LRFD 8.5.2.2].

P_n = nominal pile structural resistance at the strength limit state, kips. In keeping with past practice the structural resistance shall be limited to the following maximum values unless special design is approved by the supervising Unit Leader:

- 64 kips for piles in integral abutments,
- 64 kips for piles 20 to 30 feet long, and
- 80 kips for piles 35 to 55 feet long.

In unusual cases where the top of a pile extends above ground or is subjected to significant moment or eccentric load, the pile also needs to be checked structurally at or near its top.

The minimum pile length shall be 20 feet, and the maximum pile length shall be 55 feet, with intermediate lengths in 5-foot increments.

To provide a pinned head condition for timber piles in integral abutments where the bridge length is 150 to 200 feet, the pile heads shall be wrapped with carpet (or rug) padding. See the commentary for details and plan note [BDM C6.2.6.3].

For large projects with 1500 feet or more of timber piles and especially when piles tip out in soft material with N_{60}-values of 10 or less, the designer should consider requiring a test pile or a pile load test and shall discuss the issue with the supervising Unit Leader. A test pile or a pile load test should be located in a relatively dry abutment or pier footing but not in a prebored hole or in a cofferdam.

Timber piles have limited overcapacity for hard driving and thus should not be used for projects that will subject piles to significant downdrag forces. The traditional driving limit by the Iowa DOT ENR Formula scales up to an LRFD target driving resistance of 160 tons, and the designer should specify that limit in CADD Note E719 or E819 as appropriate.

Timber piles should be fitted with metal driving shoes when recommended by the Soils Design Unit. Figure 6.2.6.3-1 gives the driving shoe detail for timber piles less than 40 feet in length, and Figure 6.2.6.3-2 gives the detail for piles 40 to 55 feet in length.

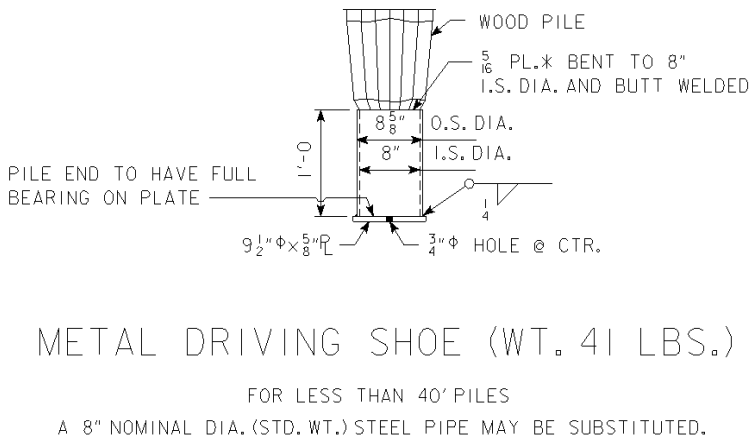

Figure 6.2.6.3-1. Metal driving shoe for timber piles less than 40 feet in length

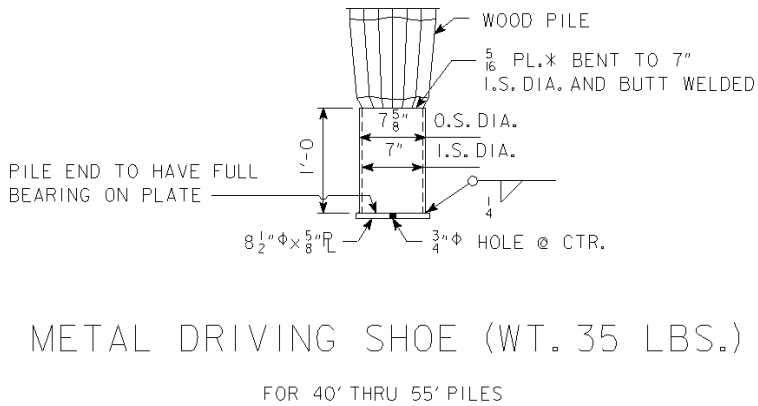

Figure 6.2.6.3-2. Metal driving shoe for timber piles 40 to 55 feet in length

In the absence of special analysis the designer may assume the lateral resistances given in Table 6.2.6.3. The assumed resistances are intended only for the head of a fully embedded pile.

Table 6.2.6.3. Nominal assumed lateral resistance per embedded timber pile

Service limit state resistance (1)	Strength or extreme event limit state resistance (1)
4 kips	7 kips

Table notes:

(1) The designer may add the horizontal component of the resistance of a battered pile only if there is sufficient vertical load to develop the horizontal component.

6.2.6.4 Prestressed concrete

Prestressed concrete piles are feasible only in soils that permit displacement piles and soils that provide adequate geotechnical resistance through friction or a combination of friction and end bearing. Prestressed piles have proven to be difficult to drive in very firm glacial clay and very firm sandy glacial clay, and the designer shall consult with the Soils Design Unit before using prestressed piles in those soils. Prestressed concrete piles should not be driven in glacial clay with consistent N_{60}-values greater than 30 to 35. The soil layer at the tip of the pile shall have an N_{60}-value in the 25 to 35 range, with no boulders.

Prestressed concrete bearing piles shall meet the material, strength, and other requirements of the standard specifications [IDOT SS 2407].

The designer may consider 12-inch square prestressed concrete piles for support of piers and stub abutments but not for integral abutments [OBS SS 1046]. Prestressed concrete piles 14 or 16 inches square are an option for pile bents [BDM 6.6.4.2.1.2] as detailed and noted on the standard sheet for trestle pile bents [OBS SS P10L].

The structural design for 12-inch square piles detailed on the standard sheet [OBS SS 1046] shall follow the AASHTO LRFD Specifications. The maximum nominal structural resistance to be used in design shall be 200 kips.

The geotechnical design to determine pile contract length and driving target shall follow the procedures in this manual [BDM 6.2.4].

The maximum length of an individual 12-inch foundation pile section shall be 55 feet. When piles longer than 55 feet are required, pile splices shall be used to fasten pile sections together. Only one splice will be allowed for overall pile lengths in the 56 to 110-foot range. Pile sections shall be welded together at the splice after the first section is driven.

Standard sheets [OBS SS 1046] require a steel splice plate on the driving end of the pile. Pile suppliers can be expected to provide 5-foot and 10-foot extensions for splicing a pile that does not achieve required bearing at the expected depth.

The designer shall consult with the Soils Design Unit regarding the need for steel driving points.

Top portions of 12 inch prestressed concrete piles to be embedded in stub abutment or pier footing concrete shall be roughened, after driving, by sandblasting or other approved methods to improve bond between piles and footing [OBS SS 1046 and IDOT SS 2403.03, I].

6.2.7 Nominal geotechnical resistances

The following charts, Tables 6.2.7-1 and 6.2.7-2, give nominal, unit geotechnical resistance values for end bearing and friction bearing piles. These LRFD charts have been extrapolated from the 1994 Blue Book charts [BDM 6.2.1.5] by removing the presumed safety factor of two and by converting units from tons or pounds to the kip units used in the AASHTO LRFD Specifications. Thus most values in these LRFD charts are four times the values in the 1994 charts. The charts also were modified for written statements in the Blue Book and past Bureau practice for timber and prestressed concrete piles.

The unit geotechnical resistance values in the Blue Book evidently were developed without adjustment for the water table. In most cases the recent LRFD statistical calibration for resistance factors covers the fluctuations in load test results that would be attributable to the water table, but that may not always be true for soil conditions at river bridges. In non-cohesive soil, groundwater can significantly reduce the effective stress and resulting nominal pile bearing resistance. This is of particular concern for a river bridge that is founded on friction piles driven in granular soil below the phreatic surface. In that case, the designer should consider performing a separate analysis that accounts for the effective overburden pressure, to verify that the estimated pile length based on the unit resistance values is reasonable.

Further discussion about effective stress methods of analysis to estimate required pile lengths is presented in *Design and Construction of Driven Pile Foundations, Volume I, FHWA NHI-05-042* [BDM 6.2.1.5]. The impact of effective stress on the nominal pile bearing resistance can be checked with the DRIVEN computer program available from FHWA. The DRIVEN Program User's Manual (Mathias and Cribbs 1998) and software Version 1.2, released in March 2001, can be downloaded from: http://www.fhwa.dot.gov/engineering/geotech/software.cfm.

Table 6.2.7-1. LRFD driven pile nominal unit geotechnical resistances for end bearing

SOIL DESCRIPTION	BLOW COUNT N_{60}-VALUE (8)		ESTIMATED NOMINAL RESISTANCE VALUES FOR END BEARING PILE IN KIPS [KSI]										
			WOOD PILE (1), (3)	STEEL "H" GRADE 50			PRESTRESSED CONCRETE (2)			STEEL PIPE (4)			
	MEAN	RANGE		10	12	14	12	14	16	10	12	14	18
Granular material													
	<15	---	(5)	(5)	(5)	(5)	(5)	(5)	(5)	(5)	(5)	(5)	(5)
Fine or medium sand	15	---	32	(5)	(5)	(5)	60	84	108	32	48	64	108
Coarse sand	20	---	44	(5)	(5)	(5)	84	116	148	44	64	88	144
Gravelly sand	21	---	44	(5)	(5)	(5)	84	116	148	44	64	88	144
	25	---	56	(5)	(5)	(5)	(7)	(7)	(7)	(7)	(7)	(7)	(7)
	---	25-50	(6)	[2-4]	[2-4]	[2-4]	(6), (7)	(6), (7)	(6), (7)	(7)	(7)	(7)	(7)
	---	50-100	(6)	[4-8]	[4-8]	[4-8]	(6)	(6)	(6)	(7)	(7)	(7)	(7)
	---	100-300	(6)	[8-16]	[8-16]	[8-16]	(6)	(6)	(6)	(7)	(7)	(7)	(7)
	---	>300	(6)	[18]	[18]	[18]	(6)	(6)	(6)	(7)	(7)	(7)	(7)
Bedrock													
	---	100-200	(6)	[12]	[12]	[12]	(6)	(6)	(6)	(7)	(7)	(7)	(7)
	---	>200	(6)	[18]	[18]	[18]	(6)	(6)	(6)	(7)	(7)	(7)	(7)
Cohesive material													
	12	10-50	16	(5)	(5)	(5)	28	40	52	16	24	32	52
	20	---	24	[1]	[1]	[1]	44	64	84	28	36	52	84
	25	---	32	[2]	[2]	[2]	60	84	108	32	48	64	108
	50	---	(6)	[4]	[4]	[4]	116 (6)	164 (6)	212 (6)	56	96	128	212
	100	---	(6)	[7]	[7]	[7]	(6)	(6)	(6)	(6)	(6)	(6)	(6)

Table notes:

(1) Wood piles shall not be driven through soils with N > 25.
(2) With prestressed concrete piles the preferred N for soil at the tip ranges from 25 to 35. Prestressed concrete piles have been proven to be difficult to drive in very firm glacial clay and very firm sandy glacial clay. Prestressed concrete piles should not be driven in glacial clay with consistent N > 30 to 35.
(3) End bearing resistance values for wood piles are based on a tip area of 72 in^2. Values shall be adjusted for a different tip area.
(4) Steel pipe piles should not be driven in soils with consistent N > 40. See the 1994 soils information chart [BDM 6.2.1.5] for end bearing when a conical driving point is used.
(5) Do not consider end bearing.
(6) Use of end bearing is not recommended for timber piles when N > 25 or for prestressed concrete piles when N > 35 or for any condition identified with this note.
(7) End bearing resistance shall be 0.0389 x "N" value [ksi].
(8) Use uncorrected N-values until N_{60}-values are available.

Table 6.2.7-2. LRFD driven pile nominal unit geotechnical resistances for friction bearing

SOIL DESCRIPTION	BLOW COUNT		ESTIMATED NOMINAL RESISTANCE VALUES FOR FRICTION PILE IN KIPS/FOOT										
	N_{60}-VALUE (5)		WOOD PILE	STEEL "H" GRADE 50			PRESTRESSED CONCRETE			STEEL PIPE			
	MEAN	RANGE		10	12	14	12	14	16	10	12	14	18
Alluvium or Loess													
Very soft silty clay	1	0 - 1	0.8	0.4	0.8	0.8	0.8	0.8	0.8	0.4	0.4	0.4	0.8
Soft silty clay	3	2 - 4	1.2	0.8	1.2	1.2	0.8	0.8	0.8	0.8	0.8	0.8	1.2
Stiff silty clay	6	4 - 8	1.6	1.2	1.6	2.0	1.2	1.6	2.0	1.2	1.2	1.6	2.0
Firm silty clay	11	7 - 15	2.4	2.0	2.4	2.8	2.4	2.8	3.2	1.6	2.0	2.4	2.8
Stiff silt	6	3 - 7	1.6	1.2	1.6	1.6	1.6	1.6	1.6	1.2	1.2	1.6	1.6
Stiff sandy silt	6	4 - 8	1.6	1.2	1.6	1.6	1.6	1.6	1.6	1.2	1.2	1.6	1.6
Stiff sandy clay	6	4 - 8	1.6	1.2	1.6	2.0	2.0	2.0	2.4	1.2	1.6	1.6	2.0
Silty sand	8	3 - 13	1.2	1.2	1.2	1.6	1.6	1.6	1.6	0.8	0.8	1.2	1.6
Clayey sand	13	6 - 20	2.0	1.6	2.0	2.8	2.4	2.4	2.8	1.6	2.0	2.4	2.8
Fine sand	15	8 - 22	2.4	2.0	2.4	2.8	2.4	2.8	3.2	1.6	2.0	2.4	2.8
Coarse sand	20	12 - 28	3.2	2.8	3.2	3.6	3.2	3.6	4.0	2.0	2.4	2.8	3.6
Gravely sand	21	11 - 31	3.2	2.8	3.2	3.6	3.6	3.6	4.0	2.0	2.4	2.8	3.6
Granular material	> 40	---	(2)	4.0	4.8	5.6	(2)	(2)	(2)	(2)	(2)	(2)	(2)
Glacial Clay													
Firm silty glacial clay	11	7 - 15	2.8	2.4	2.8	3.2	2.8	3.2	3.6	2.0	2.4	2.4	3.2
Firm clay (gumbotil)	12	9 - 15	2.8	2.4	2.8	3.2	2.8	3.2	3.6	2.0	2.4	2.4	3.2
Firm glacial clay(1)	11	7 - 15	2.4 [3.2]	2.8 [3.2]	3.2 [4.0]	3.6 [4.4]	3.2 [4.0]	3.6 [4.4]	4.0 [4.8]	2.0 [2.4]	2.4 [2.8]	2.8 [3.2]	3.6 [4.4]
Firm sandy glacial clay(1)	13	9 - 15	2.4 [3.2]	2.8 [3.2]	3.2 [4.0]	3.6 [4.4]	3.2 [4.0]	3.6 [4.4]	4.0 [4.8]	2.0 [2.4]	2.4 [2.8]	2.8 [3.2]	3.6 [4.4]
Firm - very firm glacial clay(1)	14	11 - 17	2.8 [3.6]	2.8 [4.0]	3.2 [4.8]	3.6 [5.6]	4.0 [4.8]	4.4 [5.2]	4.8 [5.6]	2.4 [3.2]	2.8 [3.6]	3.2 [4.0]	4.0 [5.2]
Very firm glacial clay(1)	24	17 - 30	2.8 [3.6]	2.8 [4.0]	3.2 [4.8]	3.6 [5.6]	3.2 (3) [4.8]	3.6 (3) [5.6]	4.4 (3) [6.4]	2.4 [3.2]	2.8 [3.6]	3.2 [4.0]	4.0 [5.2]
Very firm sandy glacial clay(1)	25	15 - 30	3.2 [4.0]	2.8 [4.0]	3.2 [4.8]	3.6 [5.6]	3.2 (3) [4.8]	3.6 (3) [5.6]	4.4 (3) [6.4]	2.4 [3.2]	2.8 [3.6]	3.2 [4.0]	4.0 [5.2]
Cohesive or glacial material(1)	> 35	---	(2)	2.8 [4.0]	3.2 [4.8]	3.6 [5.6]	(2)	(2)	(2)	2.0 (4) [3.2]	2.4 (4) [4.0]	2.8 (4) [4.4]	3.6 (4) [5.6]

Table notes:

(1) For double entries the upper value is for an embedded pile within 30 feet of the natural ground elevation, and the lower value [ ] is for pile depths more than 30 feet below the natural ground elevation.

(2) Do not consider use of this pile type for this soil condition, wood with N > 25, prestressed concrete with N > 35, or steel pipe with N > 40.

(3) Prestressed concrete piles have proven to be difficult to drive in these soils. Prestressed piles should not be driven in glacial clay with consistent N > 30 to 35.

(4) Steel pipe piles should not be driven in soils with consistent N > 40. (5) Use uncorrected N-values until N_{60}-values are available.

6.2.8 Soil categories

Geotechnical resistance factors [BDM 6.2.9] for design (contract length) and for construction (target driving resistance) were statistically calibrated by Iowa State University researchers for three generalized soil categories based on a 70% rule. Therefore the designer will need to use these same categories when selecting geotechnical resistance factors for design:

- Cohesive: Along the pile length in contact with soil, 70% or more of the length is through soils classified as cohesive according to Table 6.2.8.
- Mixed: Along the pile length in contact with soil, 31% to 69% of the length is through soils classified as cohesive according to Table 6.2.8 (or 31% to 69% of the length is through soils classified as non-cohesive according to Table 6.2.8).
- Non-Cohesive: Along the pile length in contact with soil, 70% or more of the length is through soils classified as non-cohesive according to Table 6.2.8.

Table 6.2.8. Soil category based on soil classification

Friction Pile Charts

BDM Table 6.2.7-2

Generalized Soil Category	Soil Classification Method			
	AASHTO	USDA Textural	BDM 6.2.7 Geotechnical Resistance Chart	
Cohesive	A-4, A-5, A-6 and A-7	Clay Silty clay Silty clay loam Silt Clay loam Silt loam Loam Sandy clay	Loess	Very soft silty clay
				Soft silty clay
				Stiff silty clay
				Firm silty clay
				Stiff silt
				Stiff sandy clay
			Glacial Clay	Firm silty glacial clay
				Firm clay (gumbotil)
				Firm glacial clay
				Firm sandy glacial clay
				Firm-very firm glacial clay
				Very firm glacial clay
				Very firm sandy glacial clay
				Cohesive or glacial material
Non-Cohesive	A-1, A-2 and A-3	Sandy clay loam Sandy loam Loamy sand Sand	Alluvium Or Loess	Stiff sandy silt
				Silty sand
				Clayey sand
				Fine sand
				Coarse sand
				Gravely sand
				Granular material (N>40)

The generalized soil category is dependent only on the soil considered to be in contact with the side of a pile for friction bearing, downdrag, or tension and is not affected by the soil in contact with the tip for end bearing. In some cases, for different design and construction conditions, different lengths of pile will need to be considered. For example, for determining the contract length for a pile affected by scour, only the pile length below design scour would be considered for friction bearing and contract length; whereas, for construction control and driving, the pile length in soil above and below design scour would be considered when determining soil category.
Therefore, the generalized soil category can change depending on which condition the designer is considering. Any of the following factors can affect the pile length assumed to be in contact with soil: excavation or preboring before driving, downdrag, scour, driving refusal at partial pile length, and pile extension. Site soil layering in combination with pile length in contact with soil may cause some unexpected changes in generalized soil category, and the designer should check multiple possible conditions and apply judgment.

6.2.9 Resistance factors

The designer needs to consider a driven pile at service, strength, and extreme event limit states, and the designer will need resistance factors for design conditions within those limit states. For typical projects the three most important considerations are at the strength limit state: structural resistance, geotechnical resistance, and target driving resistance.

For structural resistance factors at the strength limit state the Bureau requires that the designer use the factors given in the AASHTO LRFD Specifications for the appropriate pile material and design condition.

Iowa State University researchers developed geotechnical and target driving resistance factors from static load tests by statistical calibration, with adjustments based on engineering judgment. The Bureau also filled in gaps in the resistance factors based on experience. Use the resistance factors in Tables 6.2.9-1, 6.2.9-2, and 6.2.9-3 for timber, steel H, prestressed concrete, and steel pipe piles, <u>but</u> use the reductions for target driving resistance of timber piles given in the notes for Table 6.2.9-3.

For end bearing on rock at the strength limit state the designer shall use a resistance factor of 0.70. For friction and end bearing in soil at the strength limit state the designer shall use the resistance factors in the following two tables. The first table, Table 6.2.9-1, gives the factors for piles in axial compression.

Table 6.2.9-1. Geotechnical resistance factors (φ) for friction and end resistance at the strength limit state for a single pile in a redundant pile group

Theoretical Analysis (1)	Construction Control (Field Verification) (2) Axial Compression Resistance Factor for Design (3)									
	Driving Criteria Basis		PDA/ CAPWAP	Planned Retap Test 3-Days After EOD	Static Pile Load Test	Cohesive			Mixed	Non-Cohesive
	Iowa DOT ENR Formula	WEAP				φ	φ_{EOD}	φ_{SETUP}	φ	φ
Iowa Blue Book	Yes					0.60			0.60	0.50
		Yes (4)				0.65			0.65	0.55
		Yes (4)	Yes			0.70 (5)			0.70	0.60
		Yes (4)	Yes	Yes		0.80			0.70	0.60
		Yes (4)			Yes	0.80			0.80	0.80

Table notes:

(1) Use BDM Table 6.2.7-2 to estimate the theoretical nominal pile resistance for friction bearing. If soil or rock at the pile tip is capable of end bearing, estimate the theoretical end resistance from BDM Table 6.2.7-1. Resistance factors in this table apply for end bearing in soil; the resistance factor for end bearing in rock is 0.70.
(2) Use the construction control that will be specified on the plans. Except in unusual cases the construction control for state projects will be WEAP.
(3) These resistance factors are for redundant pile groups, which the Bureau defines as five piles minimum except four piles minimum for abutments.
(4) Use the Blue Book soil input procedure to complete WEAP analyses.
(5) Setup effect has been included when WEAP is used to establish driving criteria <u>and</u> CAPWAP is used as a construction control.

The second table, Table 6.2.9-2, gives the resistance factors for friction resistance for piles in axial tension. The factors for tension are 0.75 of the factors for compression in the first table, rounded to the nearest 0.05.

Table 6.2.9-2. Geotechnical resistance factors (φ_{UP}) for friction resistance under axial tension at the strength limit state for a single pile in a redundant pile group

Theoretical Analysis (1)	Construction Control (Field Verification) (2)					Axial Tension Resistance Factor for Design (3)				
	Driving Criteria Basis		PDA/ CAPWAP	Planned Retap Test 3-Days After EOD	Static Pile Load Test	Cohesive			Mixed	Non-Cohesive
	Iowa DOT ENR Formula	WEAP				φ	φ_{EOD}	φ_{SETUP}	φ	φ
Iowa Blue Book	Yes					0.45			0.45	0.40
		Yes (4)				0.50			0.50	0.40
		Yes (4)	Yes			0.55 (5)			0.55	0.45
		Yes (4)	Yes	Yes		0.60			0.55	0.45
		Yes (4)			Yes	0.80			0.80	0.80

Table notes:

(1) Use BDM Table 6.2.7-2 to estimate the theoretical nominal pile resistance for friction bearing.
(2) Use the construction control that will be specified on the plans. Except in unusual cases the construction control for state projects will be WEAP.
(3) These resistance factors are for redundant pile groups, which the Bureau defines as five piles minimum except four piles minimum for abutments.
(4) Use the Blue Book soil input procedure to complete WEAP analyses.
(5) Setup effect has been included when WEAP is used to establish driving criteria <u>and</u> CAPWAP is used as a construction control.

For lateral load on a single pile or a pile group at the strength limit state the designer shall use a resistance factor of 1.0 [AASHTO-LRFD Table 10.5.5.2.3-1].

The designer shall use the following table, Table 6.2.9-3, for target driving resistance factors at the strength limit state. For end bearing on rock at the strength limit state the designer shall use a driving resistance factor of 0.70.

Table 6.2.9-3. Target driving resistance factors (φ_{TAR}) at the strength limit state for a single pile in a redundant pile group

Theoretical Analysis (1)	Construction Control (Field Verification) (2)					Driving Resistance Factor for Construction				
	Driving Criteria Basis		PDA/ CAPWAP	Planned Retap Test 3-Days After EOD	Static Pile Load Test	Cohesive			Mixed	Non-Cohesive
	Iowa DOT ENR Formula	WEAP				φ	φ_{EOD}	φ_{SETUP}	φ	φ
Iowa Blue Book	Yes					0.55 (6)			0.55 (6)	0.50 (6)
		Yes (4)					0.65 (7)	0.20 (7)	0.65 (7)	0.55 (7)
		Yes (4)		Yes		0.70			0.65	0.55
		Yes (4)	Yes (5)				0.75	0.40	0.70	0.70
		Yes (4)	Yes (5)	Yes		0.80			0.70	0.70
		Yes (4)			Yes	0.80			0.80	0.80

Table notes:

(1) Use BDM Table 6.2.7-2 to estimate the theoretical nominal pile resistance for friction bearing.
(2) Use the construction control specified on the plans. Except in unusual cases the construction control for state projects will be WEAP.
(3) These resistance factors are for redundant pile groups, which the Bureau defines as five piles minimum except four piles minimum for abutments.
(4) Use the Blue Book soil input procedure to complete WEAP analyses.
(5) Use signal matching to determine nominal driving resistance.
(6) Based on historic timber pile test data, reduce the resistance factor to 0.35 for redundant groups of timber pile if the Iowa DOT ENR formula (modified for LRFD) is used for construction control.
(7) For redundant groups of timber pile, reduce the resistance factor to 0.40 without increase for setup if WEAP is used for construction control.

The resistance factors for the strength limit state account for resistance gain due to pile setup for friction piles driven in cohesive soil; and the resistance factors neglect pile setup for friction piles driven in non-cohesive and mixed soil types. Calibration of the resistance factors was based on the target nominal resistance that is achieved at seven days after EOD. To accommodate Iowa DOT construction practice, it was assumed that planned retap tests for construction control would be completed three days after EOD.

The designer shall take resistance factors for the service limit state as 1.0, except as provided for overall stability in the AASHTO LRFD Specifications [AASHTO-LRFD 11.6.2.3].

The designer shall take resistance factors at the extreme event limit state as 1.0 [AASHTO-LRFD 10.5.5.3], except that for uplift resistance of piles the designer shall use a resistance factor of 0.75.

6.2.10 Cohesive soil setup

For H-piles driven in cohesive soil, the setup chart in Figure 6.2.10 provides a means for estimating the increase in pile driving resistance due to setup after EOD with WEAP construction control. The chart shall not be used with Iowa DOT ENR Formula control and shall not be used with timber, prestressed concrete, or concrete-filled pipe piles.

The average SPT N_{60}-value (N_a) to use with the chart is determined as follows:

$$\mathbf{N_a} = \frac{\sum_{i=1}^{n} N_i l_i}{\sum_{i=1}^{n} l_i}$$

Where:

N = N_{60}-value for soil layer
l = thickness of soil layer

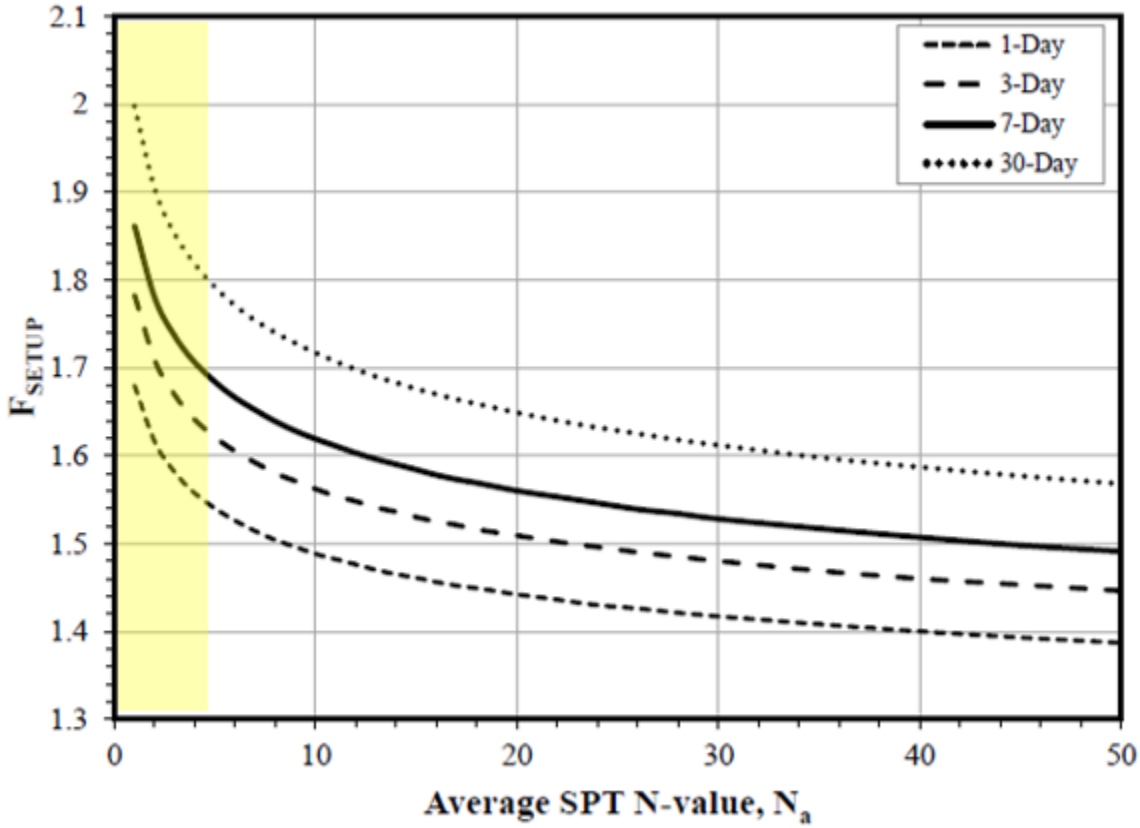

Figure 6.2.10. Setup factor chart for WEAP construction control

The designer should use the setup chart with caution for a soft clay layer with an SPT N_{60}-value less than 5 (the shaded region on the chart) or with an undrained shear strength (S_u) less than 1.04 ksf.

Pile setup has been observed above and below the water table as reported in *Development of LRFD Procedures for Bridge Pile Foundations in Iowa – Volume II: Field Testing of Steel H-Piles in Clay, Sand, and Mixed Soils and Data Analysis* [BDM 6.2.1.5]. At this time, no special treatment of the water table is suggested for pile design in cohesive soils.

C6.2 Piles

This commentary has been revised for the 2012 LRFD calibration.

C6.2.1.3 Definitions

Natural ground elevation

The Blue Book friction bearing chart has two values for some of the cohesive soil classifications. The value in ( ) is for "pile depths more than 30' below the natural ground elevation". Although natural ground elevation seems self-explanatory there is a question of interpretation for piles for bridge replacements that penetrate embankments placed for the original bridge many years earlier. The most conservative interpretation is to use the ground elevation before the embankment was placed, but the Bureau has no definitive policy at this time.

The Blue Book does not give an interpretation, but does indicate that the concept arose from work by Tomlinson published in 1979 for piles with two different lengths. The adhesion (an indication of friction bearing) was larger per square foot for the longer embedded piles. The Blue Book authors evidently developed the larger values in ( ) using 30 feet as a limit rather than pile length. Using this information, the designer could make a judgment depending on the type of embankment soil and the time elapsed since its placement. With construction control the pile resistance will be tested and, if the designer has made too liberal an interpretation, piles will need to be retapped or extended.

C6.2.1.4 Abbreviations and notation

Corrected N-values

There are two corrections that may be made to N-values: (1) a correction for hammer efficiency and (2) a correction for overburden pressure in sands. At this time the Iowa DOT is intending in the future to make the hammer efficiency correction in all cases but to make the overburden correction only in non-typical cases as advised by the Soils Design Unit.

Concerns regarding the efficiencies of different soil drilling rigs for the standard penetration test did not arise during the time period when most of the Iowa DOT pile static load tests were conducted. Based on industry estimates, the hammer efficiencies at that time averaged about 60%, but there is no way to determine the actual efficiencies of the soil borings associated with the pile tests.

In the calibrations for contract length and driving target, ISU researchers used uncorrected N-values in all cases, even with recent tests for which hammers are likely to have higher than 60% efficiencies. Most likely the range of hammer efficiencies introduced more variation in the calibration, and the resulting resistance (φ) factors are conservative.

Because hammer efficiencies most likely were about 60% for the majority of the tests used in calibration, and because the industry is moving toward N_{60} as a standard, the Iowa DOT is intending to require that N_{60} values be reported by Iowa DOT personnel and consultants. Until the time that N_{60} results are reported the designer may use uncorrected values. With modern automatic trip hammers reported N-values will be lower, which is likely to increase contract lengths slightly and decrease driving targets slightly.

Although N-values also can be corrected for overburden pressure in granular soils, at this time the Bureau does not intend to make the additional overburden correction, $N1_{60}$ [AASHTO LRFD 10.4.6.2.4], for typical projects.

However, when the designer is considering liquefaction of granular soils for seismic design or other appropriate special cases, the designer should make the correction.

C6.2.4.2 Pile length

22 January 2013 ~ Pile Group Resistance

Historically there have been many efforts to develop viable efficiency reduction factors for pile groups. Unfortunately, there have been few field tests [7] and limited model tests that at least one expert considers

problematic [5]. Generally, the AASHTO LRFD Specifications use efficiency reductions for certain conditions in cohesive soils proposed in NCHRP Report 343 [2]. The Canadian Highway Bridge Design Code [3], however, does not use efficiency reductions.

In Article 10.7.3.9 the AASHTO LRFD Specifications modify in two ways the nominal pile group resistance determined from the sum of the individual pile resistances in clay. The first modification is to require reduction of pile resistances by an efficiency factor in a limited case when piles are closely spaced and the cap is not in contact with the ground, and the second is to require an equivalent pier analysis that considers an overall block failure for the group.

According to the AASHTO LRFD Specifications the efficiency factors apply to a very limited case in soft cohesive soil

(undrained shear strength < 2 ksf [4], which approximately correlates with N < 16 [6]) where the cap (or footing) is not in contact with the soil.

Under the notation article [AASHTO LRFD 10.3] the specifications define the efficiency factor as "shaft efficiency reduction factor for axial resistance…". In the engineering literature "shaft" generally refers to friction resistance rather than end bearing resistance and, therefore, the Bureau requires the reduction, when it applies, only to the friction resistance.

The AASHTO LRFD Specifications do not define group, but the intent appears to be vertical piles in multiple rows [AASHTO LRFD C10.7.3.9] such as for frame pier and T-pier foundations without battered piles. The specifications do not give information for the typical Iowa pier foundations with perimeter battered piles that rapidly increase pile spacing with depth, and there is no indication at which depth a variable pile spacing should be measured. A 12-inch pile at the usual Iowa-specified 1:4 batter will go from a spacing of 2.5D adjacent to a vertical pile at its head to a spacing of 6D at a depth of 14 feet.

With the usual Iowa-required pile spacing and batter it seems unlikely that an equivalent pier failure could occur due to the large shear area surrounding the pile group, and tests reported in the engineering literature generally indicate that the equivalent pier failure only occurs when vertical piles are closely spaced at about 2D or less [5]. Because the Bureau specifies a minimum pile spacing of 2.5D and typically uses battered piles, the Bureau does not require efficiency reductions or an equivalent pier analysis for typical frame pier and T-pier foundations. However, for pier foundations with all-vertical piles that meet the conditions in the AASHTO LRFD Specifications, the designer is expected to use the appropriate AASHTO efficiency factors.

The AASHTO LRFD Specifications also do not give information for pile bents with a single row of piles. With a single row of piles there is no reasonable possibility of an equivalent pier failure and, in reported model tests, efficiencies generally were larger for a single row of piles than for multiple rows of piles [1]. For these reasons and the minimum 2.5D spacing discussed above, the Bureau does not require efficiency reductions or an equivalent pier analysis for typical, single row pile bents.

Integral abutments have a single row of piles and a cap in contact with the ground, and therefore the efficiency reductions do not apply. Stub abutments have battered piles and a cap in contact with the ground, and therefore the efficiency reductions also do not apply.

References

[1] Al-Mhaidib, Abdullah I. (2007) "Efficiency of Pile Groups in Clay under Different Loading Rates." *Proceedings of the Seventeenth (2007) International Offshore and Polar Engineering Conference,* Lisbon, Portugal, pp 1458-1463. (single and multiple row model tests without a footing)

[2] Barker, R.M, J.M. Duncan, K.B. Rojiani, P.S.K. Ooi, C.K. Tan, and S.G. Kim. (1991) *Manuals for the Design of Bridge Foundations, NCHRP Report 343.* Transportation Research Board, Washington, DC. (source of rules in present AASHTO LRFD Specifications with minor modifications)

[3] Canadian Standards Association. (2000) *Canadian Highway Bridge Design Code, CAN/CSA-S6-00 and Commentary.* CSA International, Toronto, Canada.

[4] Hannigan, P.J., G.G. Goble, G.E. Likins, and F. Rausche (2005) *Design and Construction of Driven Pile Foundations—Volume I.* Ryan R. Berg & Associates, Inc., Woodbury, MN. (This is the reference manual for NHI Courses No. 132021 and 132022.)

[5] O'Neill, Michael W. (1983) "Group Action in Offshore Piles." *Proceedings of the Conference on Geotechnical Practice in Offshore Engineering,* Austin, TX, pp 25-64. (considered to be a state-of-the-art summary for the early 1980s)

[6] Teng, Wayne C. (1964) *Foundation Design.* Prentice-Hall, Inc., Englewood Cliffs, NJ.

[7] Vesic, Aleksandar S. (1977) *Design of Pile Foundations, NCHRP Report 42.* Transportation Research Board, Washington, DC.

C6.2.4.3 Contract Length

2007 LRFD interim pile design practice superseded by the ISU calibration in 2012

As a temporary measure, in view of the October 2007 deadline for conversion of bridge design to LRFD, the Bridges and Structures Bureau calibrated pile design practice to LRFD by fitting with the 1994 soils information charts (Blue Book). In 2007, research at Iowa State University was initiated through the Iowa Highway Research Board (TR-573, TR-583, and TR-584) to examine pile design calibration with respect to reliability theory, as well as to examine present design and construction procedures. The research has been completed and is the basis for present pile design policy written into the manual.

The interim policy was based on the following:

- An average load factor, γ_{bar} , of 1.45, for a dead to live load ratio of 3:2.

- A minimum factor of safety of 2.0 in the 1994 soils information charts (Blue Book).
- An H-pile structural phi factor, φ_c, of 0.6 for axial compression in the lower part of the pile.
- An H-pile geotechnical phi factor, φ, of 0.725 obtained by fitting to the present soils charts with a formula commonly cited (Barker and Puckett 2007, Allen 2005).

References

Allen, T.M. (2005). *Development of Geotechnical Resistance Factors and Downdrag Load Factors for LRFD Foundation Strength Limit State Design, FHWA-NHI-05052.* National Highway Institute, Federal Highway Administration. Washington, DC.

Barker, R.M. and J.A. Puckett. (2007). *Design of Highway Bridges, an LRFD Approach, Second Edition.* John Wiley & Sons, Inc. New York, NY.

Dirks, K.L. and P. Kam. (1994). *Foundation Soils Information Chart, Pile Foundation*. Soils Survey Section, Highway Division, Iowa DOT. Ames, IA.

Origin of the LRFD downdrag load factor of 1.0

The major issue when designing for downdrag is computation of the downward load. In the third edition of the AASHTO LRFD Specifications two cases are identified: (1) piles driven to end bearing and (2) friction piles that experience settlement at the pile tip [AASHTO-LRFD 10.7.1.6.2]. In the first case, the specifications require that downdrag be considered at the strength and extreme event limit states. Because the extreme event limit state involves seismic design generally not required in Iowa, piles need only be designed at the strength limit state.

In the second case, the AASHTO LRFD Specifications add the service limit state because of the potential for settlement. In the past the Bridges and Structures Bureau has depended on the Soils Design Unit for settlement analysis and intends to continue doing so.

In both the AASHTO LRFD Specifications and Bureau practice the computation of the downdrag load has been made less conservative in recent years. In the second edition of the AASHTO LRFD Specifications, the downdrag load factor at the strength limit state was to be taken at 1.8. In the third edition, 2006 Interim, the downdrag load factor has been lowered to 1.05 and 1.40 depending on the method used to determine the force [AASHTO-LRFD

Table 3.4.1-2]. In the calibration of these load factors, analysis for specific conditions gave factors in the 1.00 to

1.65 range [Allen 2005].

In 2001 the Bureau indicated that the downdrag load should be computed by removing the safety factor of two from the pile chart. With that procedure, one foot of pile downdrag would be supported by two feet of friction bearing (in the same soil) or an equivalent amount of bearing. Evidently the procedure was too conservative and resulted in difficulty in designing for downdrag. Subsequently in 2004 the Bureau made the design procedure less conservative by eliminating the need to remove the safety factor from the load. Thus one foot of pile downdrag could be supported by one foot of friction bearing (in the same soil) or equivalent bearing. The rationale for the change was that uncertainty in the load would be balanced by uncertainty in the capacity, and the safety factor for downdrag could be reduced to 1.0.

To follow the latest Bureau practice in LRFD would require that the strength limit state load factor for downdrag in LRFD be reduced below 1.0 to about 0.75. The exact calibration depends on the percentage of the total load attributable to downdrag and other factors. To provide a minimum margin of safety the load factor will be taken as 1.0, which will result in numbers of piles closer to those resulting from the 2004 procedure than the 2001 procedure. The fact that the load factor is 1.0 does not mean that there is no margin of safety; the margin of safety is provided by the phi factor on pile resistance.

For a pile subject to downdrag, driving conditions will be more severe than usual. The pile will need to be driven initially through soil layers above the layer causing downdrag, as well as the layer itself, and then driven for bearing. In cases in which steel H-piles are designed at Structural Resistance Level 3 or 4 (SRL-3 or SRL-4), a pile drivability analysis should be completed by the Construction and Materials Bureau before the bridge substructure design is finalized.

Reference

Allen, T.M. (2005). *Development of Geotechnical Resistance Factors and Downdrag Load Factors for LRFD Foundation Strength Limit State Design, FHWA-NHI-05-052.* Federal Highway Administration, Washington, DC.

C6.2.4.4 Uplift

For pier piles, uplift often occurs under lateral loading at the top of the pier, and the pile tension caused by uplift needs to be transferred by friction to the soil and transferred by friction or anchorage devices to the pile footing.

Under allowable stress design (ASD) it was permissible in the Bridges and Structures Bureau (BSB) to use the full compression friction bearing values from the Blue Book in tension for a pile subjected to uplift. At least one source, however, indicates that in

practice at that time the allowable compression friction bearing value was commonly reduced by a factor of 0.75 for tension bearing [McVay et al. 1998]. The reduction for uplift is implemented in the AASHTO LRFD Specifications with a reduction in resistance factor, and ISU researchers followed that approach to determine specific, reduced resistance factors for use with nominal geotechnical resistances depending on construction control method [BDM Table 6.2.9-2].

In late 2016, at the request of BSB, ISU began conducting pile pullout tests. HP10 and HP14 piles were embedded into concrete blocks which were intended to represent typical footings used at the time. The blocks were reinforced in a manner consistent with Iowa's typical footing reinforcement practices. Piles with 12-inch and 24-inch embedment into the blocks were tested without any other anchorage. Additionally, piles with 12-inch embedment into the blocks were tested with various types of anchorages. The results for all pullout tests may be found in the research report [Iekel 2017].

The failure mode exhibited in tests for piles embedded 12 inches into the blocks without any other anchorage did not display a simple bond failure at the interface between the surface of the pile and the concrete. In general, the failure was brittle and sudden and due to concrete cracking leading to a loss of bond between the pile and concrete. HP10 and HP14 piles failed at approximately the same ultimate capacities which indicates failure is independent of surface area contact between the pile and the concrete.

Testing of piles with 24 inches of embedment into the blocks without any other anchorage displayed different failure modes for HP10 and HP14 piles. Even so, the ultimate capacity of the HP10 and HP14 piles had similar lower bound results. The results of the testing did indicate some ductility in the connection after the ultimate capacity was reached, but not consistently at or near the ultimate capacity. An important aspect of these tests was keeping the lower mat of reinforcing at 12 to 13 inches clear from the bottom of the footing (as is normally done in Iowa) with 12 inches of the 24-inch pile embedment extending above the bottom mat.

Testing of piles with 12 inches of embedment into the block and V-bars or U-bars as positive anchorage indicate that ultimate capacity is reached just before one leg of a bar fractures near the hole for the bar in the pile web. The length of the bar legs was long enough to fully develop the bar's yield strength. Ultimate capacity of these anchorages was generally a little higher than the theoretical bar yield capacity for the area of all the bar legs in the connection. The results of the testing did indicate some ductility in the connection after the ultimate capacity was reached, but not consistently at or near the ultimate capacity. The figure below depicts details of how the V-bars would typically be incorporated into a plan set. See the research report, when completed, for a schematic of the test specimens.

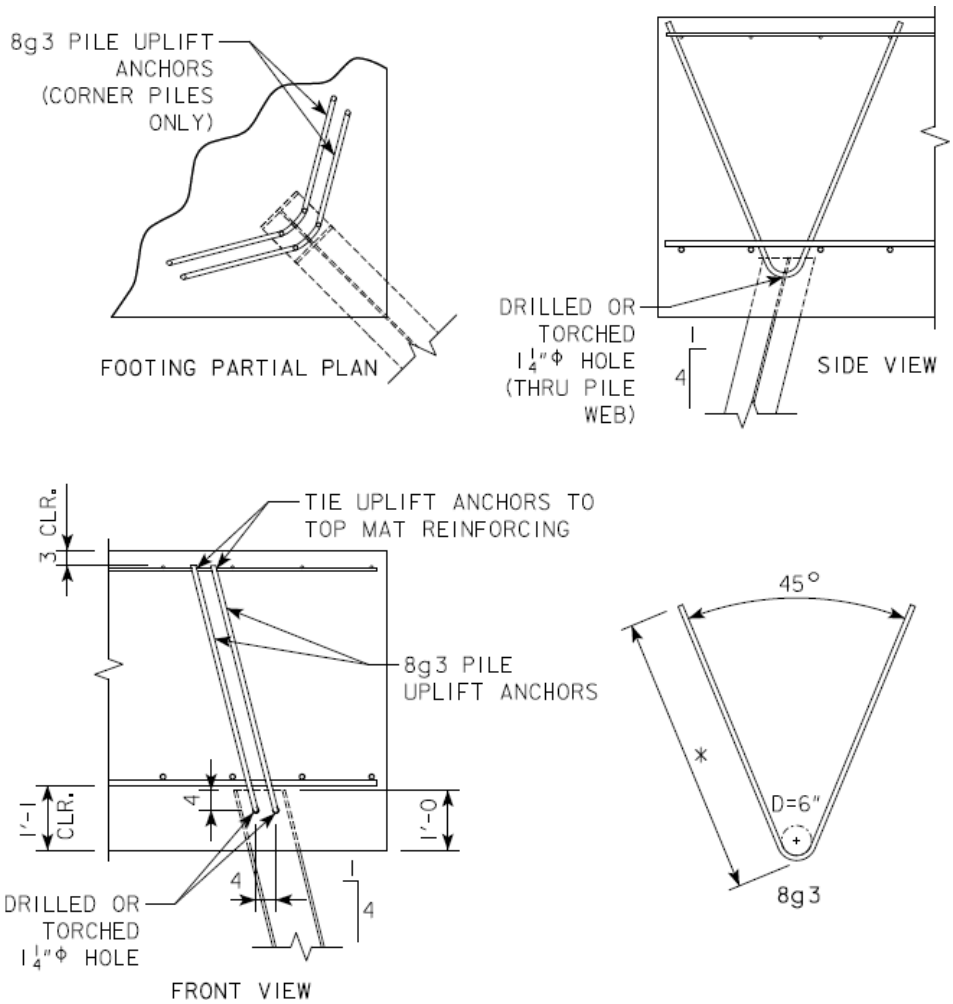

Figure note:

- The minimum V-bar leg length (*) shall be long enough to fully develop the No. 8g3 bars and to reach the top mat of reinforcing so that it can be tied to the top mat.

Figure C6.2.4.4-1. Pile Uplift Anchors using V-bars

<u>Anchorage Policy Prior to July 1, 2017</u>

For transfer of pile tension to a footing very limited data is available on the bond strength between an H-pile and a concrete footing [GAI 1982]. There is, however, related data on bond strength for encased steel columns [Griffis 1992], filled steel columns [AISC 2005], and embedded beam flanges [Watson et al. 1974]. The lowest of these bond strength values is 60 psi with an associated resistance factor of φ = 0.45 [AISC 2005]. With this bond strength and φ factor and an average AASHTO LRFD load factor of 1.45, an equivalent allowable stress would be 18.6 psi, very close to the 15 psi under ASD formerly used in the Bureau. Thus the 0.060 ksi bond resistance and φ = 0.45 have been adopted as Bureau policy [BDM 6.2.6.1].

References and Brief Summaries of Selected References

American Institute of Steel Construction (AISC). (2005). *Steel Construction Manual, 13th Edition.* AISC, Chicago, IL.

Commentary to the specification suggests a reasonable lower bound for bond strength of 60 psi for concrete-filled hollow structural section (HSS) steel columns. For LRFD the recommended resistance factor is 0.45. (Because AASHTO LRFD generally uses higher load and resistance factors than AISC LRFD, the AISC φ = 0.45 will be conservative if used with AASHTO factored loads.) The commentary also suggests that bond stress for an encased column be ignored, but acknowledges the reference below by Griffis, in which bond stress is considered.

GAI Consultants, Inc. (1982). *The Steel Pile, Pile Cap Connection.* American Iron and Steel Institute (AISI). Washington, DC.

The consulting firm, GAI Consultants, Inc. conducted 16 steel pile pull-out tests, most of which were designed to test tension anchors. One bare HP 10x42 test with the pile embedded 9 inches in concrete with a strength of at least 4300 psi indicated a bond failure at an average bond stress of 74 psi. A similar 10¾-inch diameter pipe pile test with 6-inch embedment indicated a bond failure at 143 psi. The authors recommended that bond stress not be considered in design.

Griffis, L.G. (1992). *Steel Design Guide No. 6, Load and Resistance Factor Design of W-Shapes Encased in Concrete.* American Institute of Steel Construction, Chicago, IL.

For shear connection, the author first considers bond based on a paper written by Roeder. The author considers only the flange area of an embedded wide flange shape and applies a safety factor of 5 to obtain the following:

average ultimate bond stress = $u = 0.9(0.09f'_c - 95)$

(The result from this formula for typical Iowa DOT 4.0 ksi concrete is 0.239 ksi.)

McVay, M.C., C.L. Kuo, and W.A. Singletary. (1998). *Calibrating Resistance Factors in the Load and Resistance Factor Design for Florida Foundations, Final Report.* Department of Civil Engineering, University of Florida, Gainesville, FL.

Watson, J., R. O'Neil, R. Barnoff, and E. Mead. (1974). "Composite Action without Shear Connectors."

Engineering Journal, 2nd Quarter, 1974. pp 29-33.

The authors conducted working-load flexural tests of two castellated beams with top flanges embedded in 4000 psi concrete slabs. At working loads, maximum bond stress was 82.8 and 88.0 psi. The authors also tested one beam for 750,000 cycles at a maximum bond stress of 25.4 psi and found no adhesion failure. For comparison, the 1963 ACI Code allowed a bond stress of 160 psi for plain bars.

C6.2.4.5 Lateral load

9 April 2001 ~ Battered Pile Capacity and Lateral Load Capacity for Pier Design

For allowable stress design (ASD) of abutment and pier piles the Bridges and Structures Bureau (BSB) in the past used simple guidelines for lateral load capacities. Without special analysis, for fully embedded steel H-piles the

allowable lateral load at the head was 6 kips [BDM 6.2.6.1]. For timber piles the allowable lateral load under the same conditions was 4 kips [BDM 6.2.6.3]. In each case, for a battered pile the designer was allowed to add the allowable horizontal component.

The nominal values used by the Bureau generally are conservative when compared with nominal values used by others and values associated with specific soil conditions, as the tables in Table C6.2.4.5 indicate and as examples for an H-pile in soft clay suggest [BDM C6.2.6.1].

In most cases, lateral loads for piles are governed by horizontal deflections at the service limit state. The ultimate load for a pile typically is in the range of 3 to 14 times the load that causes a 0.25-inch deflection [AISC 1973].

The allowable horizontal deflection often has been limited to 0.25 inch at the ground line for buildings, with more liberal limits for other structures [Teng 1962]. The second edition of the AASHTO LRFD Specifications had a limit of 1.5 inches for bridge piles [AASHTO LRFD-2 10.7.2.2], but that limit has been removed from the third and subsequent editions. Unless set conservatively, the allowable deflection should be set based on the type and configuration of the structure. For example, for the typical stub abutment, the pile head deflection represents the horizontal movement of the abutment, but at the top of a pier the deflection may be amplified by differential settlement and rotation, and that amplification should be considered.

The actual horizontal deflection at the head of a pile is governed by various factors: soil density or stiffness near the ground surface, water table in granular soils, fixity of pile head, pile size and stiffness, depth of pile penetration, group effects, and type of loading. Methods for estimating horizontal deflection generally take into account the soil properties and location of water table. The pile head condition is governed by details and pile material. Standard Bureau details provide a considerable amount of pile head fixity, and in most cases a steel or concrete pile head may be assumed to be fixed. A timber pile head, however, should be considered pinned.

Pile size is a factor, but the orientation of an H-pile is more significant because of the difference in stiffness and ultimate moment resistance from major to minor axis. Depth of pile penetration needs to be sufficient to meet assumptions for the method. Group effects are significant if piles will move in the shadows of other piles, and group effects can double or triple the horizontal deflection of a single pile. Generally long-term loading will have more effect than short-term loading.

For load and resistance factor design (LRFD) the design checks should include lateral deflection at the service limit state and moment at the strength limit state. The design could be accomplished by three methods: (a) conservative assumed nominal capacity at the service and strength limit states, (b) hand computation methods, or (c) software such as LPILE. Because the simple guidelines used by the Bureau in the past have worked well for typical bridges their use can be continued and supplemented with strength limit state guidelines.

For steel piles the minimum nominal lateral resistance of a pile at the strength limit state shown in Table C6.2.4.5 is 18 kips, which is three times the service limit state capacity used by the Bureau in the past. The simple guideline of 6 kips would be approximately equivalent to a nominal resistance of $\gamma*6/\varphi = (1.70)(6)/(1.0) = 10.2$ kips, assuming a relatively high average load factor. Thus it would seem reasonable to set the nominal resistance at the strength limit state at 10 kips or more. For steel piles the ultimate load generally is at least three times the load that causes a 0.25-inch deflection, and that observation can be used to set the strength limit at 18 kips. The LPILE example, Example (3), in the H-pile commentary [BDM C6.2.6.1] supports the

observation.

No comparable information is available for timber piles. Conservatively, for a 4-kip service limit, the strength limit

could be set at $\gamma*4/\varphi = (1.70)(4)/(1.0) = 6.8$, rounded to 7 kips.

Two hand computation methods are readily available in the Bureau: (a) a method based on work by Broms [Hannigan et al. 2005] and (b) a method based on work by Evans and Duncan [Brockenbrough 1997]. The Broms method will give working lateral loads based on deflection, pile structural and geotechnical capacity, pile length, and group effects. In some cases, however, the user may need to extrapolate beyond the limits of the charts provided for the method. The method covers steel and concrete piles. Results for steel piles seem not to compare well with results from LPILE software, as shown in Examples (2) and (3) given in the H-pile commentary [BDM C6.2.6.1].

The Evans and Duncan method seems easier to use and will give individual pile and group deflections and individual pile and group maximum moments. The charts provided for the method are limited to prestressed concrete piles and steel H-piles loaded with respect to the strong axis. Results seem to compare well with LPILE.

LPILE software available in the Bureau will give the deflection, moment, and shear with depth for a single pile. Input is relatively simple, and the program will handle a variety of pile types, soil types, and soil layers. Step by step instructions for use of the program for individual piles and general instructions for use of the results for pile groups are available to engineers in the Bureau who have attended the recent National Highway Institute (NHI) courses [Hannigan 2005 and Wilson et al. 2005].

The LPILE software supplier, Ensoft, Inc., also has a program, GROUP, that will analyze pile groups. At this time GROUP is not available to the Bureau.

Generally it appears that the most efficient design process is to use simple guidelines updated for LRFD for typical bridges and recommend that the designer use LPILE software for conditions requiring additional capacity or more rigorous analysis. The hand computation methods can provide checks on the software.

References

American Institute of Steel Construction (AISC) Marketing, Inc. (1973). *Highway Structures Design Handbook.*

AISC Marketing, Inc., Pittsburgh, PA.

Barker, R.M., S.G. Kim, J.M. Duncan, and K.B. Rojiani. (1991). *Manuals for the Design of Bridge Foundations, NCHRP Report 343.* Transportation Research Board, Washington, DC.

Bridge Office. (2004). *LRFD Bridge Design Manual.* Minnesota Department of Transportation, Oakdale, MN.

Brockenbrough, R.L. (1997) "Steel Piling, Vol. I, Chap. 10." *Highway Structures Design Handbook.* National Steel Bridge Alliance, Chicago, IL.

Design Office. (1998). *Bridge Manual.* Wisconsin Department of Transportation, Madison, WI. Hannigan, P.J., G.G.

Goble, G.E. Likins, and F. Rausche. (2005). *Design and Construction of Driven Pile*

Foundations – Volumes I and II. (Reference for NHI Courses 132021 and 132022). National Highway Institute, Federal Highway Administration, Washington, DC.

Teng, W.C. (1962). *Foundation Design.* Prentice-Hall, Inc., Englewood Cliffs, NJ.

U.S. Army Corps of Engineers (USACE). (1993). *Design of Pile Foundations.* American Society of Civil Engineers (ASCE), New York, NY.

Vanikar, S. N. (1986). *Manual on Design and Construction of Driven Pile Foundations, Report No. FHWA-DP-66-*

1. Federal Highway Administration, Washington, DC.

White, R.N. and C.G. Salmon, Editors. (1987). *Building Structural Design Handbook.* John Wiley & Sons, Inc., New York, NY.

Wilson, K.E., R.E. Kimmerling, G.C. Goble, P.J. Sabatini, S.D. Zang, J.Y. Zhou, W.A. Amrhein, J.W. Bouscher, and L.J. Danaovich. (2005). *LRFD for Highway Bridge Substructures and Earth Retaining Structures.* (Reference for NHI Course 130082A). Michael Baker Jr., Inc., Moon Township, PA.

Table C6.2.4.5. Summary of Permissible Lateral Loads at Heads of Embedded Piles

Timber pile lateral loads

Allowable Load, k	Conditions	Source	Date
1.5	¼-inch deflection, medium sand or medium clay, 12-inch diameter, free head	Vanikar, FHWA-DP-66-1 (McNulty)	1956
4	¼-inch deflection, medium clay, 12-inch diameter, fixed head	Vanikar, FHWA-DP-66-1 (McNulty)	1956
4	Poor soil	Wisconsin DOT	1998
5	¼-inch deflection medium sand, 12-inch diameter, fixed head	Vanikar, FHWA-DP-66-1 (McNulty)	1956
5	Average or good soil	Wisconsin DOT	1998
9	¼-inch deflection	Vanikar, FHWA-DP-66-1 (Feagin)	1953?
10		New York DOT	1977
14	½-inch deflection	Vanikar, FHWA-DP-66-1 (Feagin)	1953?

Concrete pile lateral loads

Allowable Load, k	Conditions	Source	Date
5	¼-inch deflection, medium clay, 16-inch diameter, free or fixed head	Vanikar, FHWA-DP-66-1 (McNulty)	1956
7	¼-inch deflection, medium sand, 16-inch diameter, free or fixed head	Vanikar, FHWA-DP-66-1 (McNulty)	1956
8	12-inch precast or cast-in-place, poor soil	Wisconsin DOT	1998
8	¼-inch deflection, sand, $\varphi = 30$, 10-inch prestressed	Barker, NCHRP Report 343	1991
11	12-inch precast or cast-in-place, average or good soil	Wisconsin DOT	1998
12	¼ inch deflection	Vanikar, FHWA-DP-66-1 (Feagin)	1953?
13	¼-inch deflection, sand, $\varphi = 40$, 10-inch prestressed	Barker, NCHRP Report 343	1991
13	¼-inch deflection, clay, undrained shear strength = 1 ksf, 10-inch prestressed	Barker, NCHRP Report 343	1991
15		New York DOT	1977
17	½ inch deflection	Vanikar, FHWA-DP-66-1 (Feagin)	1953?
34	¼-inch deflection, clay, undrained shear strength = 4 ksf, 10-inch prestressed	Barker, NCHRP Report 343	1991

General pile lateral loads

Allowable Load, k	Conditions	Source	Date
1	Soft clay	Teng	1962
2	3/8 inch deflection	New York City Building Code	1968
2	Modest deflection	White and Salmon, Building Structural Design Handbook	1987
10-20	Validated by tests	White and Salmon, Building Structural Design Handbook	1987

Steel pile lateral loads

Allowable Load, kips	Ultimate Load, kips	Conditions	Source	Date
	18	HP or steel pipe filled with concrete	Minnesota DOT LRFD manual	2004
2	20	HP 10x42, ¼-inch deflection, loose coarse-grained material below water table, free head, normal to flange	AISC, Highway Structures Design Handbook	1973
2	25	HP 10x42, ¼-inch deflection, medium stiff fine-grained material, free head, normal to flange	AISC, Highway Structures Design Handbook	1973
3	25	HP 10x42, ¼-inch deflection, loose coarse-grained material above water table, free head, normal to flange	AISC, Highway Structures Design Handbook	1973
4	50	HP 14x89, ¼-inch deflection, loose coarse-grained material below water table, free head, normal to flange	AISC, Highway Structures Design Handbook	1973
4	55	HP 14x89, ¼-inch deflection, medium stiff fine-grained material, free head, normal to flange	AISC, Highway Structures Design Handbook	1973
5	58	HP 14x89, ¼-inch deflection, loose coarse-grained material above water table, free head, normal to flange	AISC, Highway Structures Design Handbook	1973
7		HP, poor soil	Wisconsin DOT	1998
8	23	HP 10x42, ¼-inch deflection, dense coarse-grained material below water table, free head, normal to flange	AISC, Highway Structures Design Handbook	1973
8	48	HP 10x42, ¼-inch deflection, very stiff fine-grained material, free head, normal to flange	AISC, Highway Structures Design Handbook	1973
8		HP 10x42, ¼-inch deflection, sand, $\varphi = 30$ degrees, water table at ground surface	Barker, NCHRP Report 343 and NSBA V.I, Ch.10	1991 and 1997

Allowable Load, kips	Ultimate Load, kips	Conditions	Source	Date
10	30	HP 10x42, ¼-inch deflection, dense coarse-grained material above water table, free head, normal to flange	AISC, Highway Structures Design Handbook	1973
10		HP, average soil	Wisconsin DOT	1998
12	95	HP 14x89, ¼-inch deflection, very stiff fine-grained material, free head, normal to flange	AISC, Highway Structures Design Handbook	1973
13	50	HP 14x89, ¼-inch deflection, dense coarse-grained material below water table, free head, normal to flange	AISC, Highway Structures Design Handbook	1973
13		HP 10x42, ¼-inch deflection, clay, undrained shear strength = 1 ksf	Barker, NCHRP Report 343 and NSBA V.I, Ch.10	1991 and 1997
15		HP, good soil	Wisconsin DOT	1998
16		HP 10x42, ¼-inch deflection, sand, φ = 40 degrees, water table at ground surface	Barker, NCHRP Report 343 and NSBA V.I, Ch.10	1991 and 1997
19	70	HP 14x89, ¼-inch deflection, dense coarse-grained material above water table, free head, normal to flange	AISC, Highway Structures Design Handbook	1973
20			New York DOT	1977
40		HP 10x42, ¼-inch deflection, clay, undrained shear strength = 4 ksf	Barker, NCHRP Report 343 and NSBA V.I, Ch.10	1991 and 1997

C6.2.4.6 Target driving resistance

Because the LRFD target driving resistances are considerably larger than those used under allowable stress design (ASD) and interim LRFD before 2013, CADD Note E177 [now deleted from BDM 13.3.2] was developed and included with the project's general notes prior to January 1, 2015. The intent of the note was to give the contractor a comparison with past practice so that he/she would not select an oversized hammer. To determine the approximate target driving resistance for the note, a value was selected from the pier and abutment and pile bent tables below, or the value was determined from project computations. CADD Note E177 was deleted from the BDM on January 1, 2015 since it was determined that contractors were familiar enough with the LRFD target driving resistances. The information in this commentary article about past practices will be retained for a period of time.

Table C6.2.4.6-1. Approximate driving target values in tons for Grade 50 H-piles for piers and abutments prior to 2013

H-pile section	ASD Target Bearing Value at Structural Resistance Level – 1, tons (1) (2)	ASD Target Bearing Value at Structural Resistance Level – 2, tons (1) (2)	ASD Target Bearing Value at Structural Resistance Level – 3, tons (1) (2)	ASD Target Bearing Value at Structural Resistance Level – 4, tons (1) (2)
HP 10x42	37	56	74	93

H-pile section	ASD Target Bearing Value at Structural Resistance Level – 1, tons (1) (2)	ASD Target Bearing Value at Structural Resistance Level – 2, tons (1) (2)	ASD Target Bearing Value at Structural Resistance Level – 3, tons (1) (2)	ASD Target Bearing Value at Structural Resistance Level – 4, tons (1) (2)
HP 10x57	50	75	100	125
HP 12x53 (6)	47	70	93	116
HP 14x73 (6)	64	96	128	160
HP 14x117	103	155	206	258

Table note:

(1) Add 50% of the nominal axial driving resistance for scour, if pile is designed for scour.

(2) The designer may adjust values for rounding of the number of piles or intermediate SRL values.

Table C6.2.4.6-2. Approximate driving target values in tons for treated timber piles for piers and abutments prior to 2013

Pile length, feet (m)	ASD Target Bearing Value, tons (1)
20 – 30 or in integral abutment	20
35 – 55	25

Table note:

(1) The designer may adjust values for rounding of the number of piles.

Table C6.2.4.6-3. Approximate driving target values in tons for P10A or P10L pile bent piles prior to 2013

Pile type	ASD Target Bearing Value, tons (1) (2)
14-inch concrete-filled steel pipe (Type 1)	33
16-inch concrete-filled steel pipe (Type 1)	38
14-inch prestressed concrete (Type 2)	33
16-inch prestressed concrete (Type 2)	38
HP 10x42 (Type 3)	37
HP 10x57 (Type 3)	50
HP 12x53 (Type 3)	46
HP 14x73 (Type 3)	64
HP 14x89 (Type 3)	78

Table note:

(1) Add 50% of the nominal axial driving resistance for scour, if pile is designed for scour.

(2) The designer may adjust values for rounding of the number of piles.

C6.2.6.1 Steel H

Because of relatively high driving stresses the Construction and Materials Bureau initiated a change in the steel H-pile specification from ASTM A 36/A 36M to ASTM A 572/A 572M Grade 50. The change was effective in October 2005.

21 October 2014 ~ Structural Resistance Factor for Steel H Pile

For axial resistance of piles in compression and subject to damage due to severe driving conditions where use of a pile tip is necessary, AASHTO LRFD 6.5.4.2 requires the H-pile resistance factor, φ_c, to be decreased from 0.60 to

0.50. In general, a designer is not required to apply the more conservative reduction factor to H-piles designed according to the BDM. The structural capacity of H-piles designed according to the BDM has been limited based on geotechnical conditions. The actual structural capacity of an H-pile with F_y = 50 ksi in axial compression braced against buckling (as is the case for the end conditions of a pile driven in soil) is greater than that defined by SRL-1 to SRL-4 in BDM Table 6.2.6.1-1. This is the case even when $\varphi_c = 0.50$.

In order to illustrate the above consider an HP 14x73 with F_y = 50 ksi:

Axial compressive resistance of a pile is determined from AASHTO LRFD 6.15.3.1 which refers back to Article 6.9.2.1

$P_r = \varphi_c P_n$

$P_e = (A_g*E*\pi^2)/(Kl/r_s)^2 = \infty$ since the bottom of the pile is braced by the soil and will not buckle

$P_o = QF_yA_g = (0.973)*(50\text{ ksi})*(21.4\text{ in}^2) = 1041.11$ kips

Determine Q for flange (b = half width of flange) and web (b = clear web depth minus the corner radii):

Flange: $[b/t = b_f/2t_f = 14.4] > [k*(E/F_y)^{0.5} = (0.56)*((29{,}000\text{ ksi})/(50\text{ ksi}))^{0.5} = 13.49]$

Web: $[b/t = h/t_w = 22.6] < [k*(E/F_y)^{0.5} = (1.49)*((29{,}000\text{ ksi})/(50\text{ ksi}))^{0.5} = 35.88]$

The flange is slender. The web is non-slender.

Determine Q_s for flange:

$0.56*(E/F_y)^{0.5} = (0.56)*((29{,}000\text{ ksi})/(50\text{ ksi}))^{0.5} = 13.49$

$1.03*(E/F_y)^{0.5} = (1.03)*((29{,}000\text{ ksi})/(50\text{ ksi}))^{0.5} = 24.81$

Since $b/t = b_f/2t_f = 14.4$ is between the two limits above, Q_s, is equal to:

$Q_s = 1.415 - 0.74*(b/t)*(F_y/E)^{0.5} = 1.415 - 0.74*(14.4)*((50\text{ ksi})/(29{,}000\text{ ksi}))^{0.5} = 0.973$

Let $Q = Q_s = 0.973$

$P_e/P_o = (\infty)/(1041.11\text{ kips}) = \infty > 0.44$

$P_n = [0.658^{(P_o/P_e)}]*(P_o) = [0.658^0]*(1041.11\text{ kips}) = [1]*(1041.11\text{ kips}) = 1041.11$ kips

Note that $P_r = \varphi_c P_n = (0.50)*(1041.11\text{ kips}) = 520$ kips

From BDM Table 6.2.6.1-1:

P_n = 775 kips for SRL-4 is less than P_n =1041 kips calculated according to AASHTO-LRFD above.

Maximum $P_r = \varphi_c P_n = (0.60)*(775\text{ kips}) = 465$ kips for SRL-4 is also less than minimum P_r = 520 kips calculated according to AASHTO-LRFD above.

Since the factored structural capacities of SRL-1 to SRL-4 are below the minimum factored structural capacity of the pile calculated according to AASHTO-LRFD there is no need to reduce the nominal structural capacities of the piles in BDM Table 6.2.6.1-1 by a resistance factor, φ_c, of 0.50 for severe driving. However, it may be necessary to do so if the pile yield strength is less than 50 ksi or if there are other circumstances present which require a reduction.

5 November 2001 ~ Use of Higher Pile Capacities

Piles driven to rock

End bearing of 9 ksi at the service limit state is the same as 648 tsf. (The 9 ksi is extrapolated to Structural Resistance Level – 2 at the strength limit state.) Generally, this strength would be midrange for uniaxial compressive strength of limestone, mudstone, and sandstone and bottom range for granite [NAVFAC 1986].

In a recent paper [Serrano and Olalla 2002] the researchers surveyed the ultimate strengths of rock at pile tips proposed by several authors, developed a model, and compared it with tests. Ultimate strengths proposed by others ranged from 2.7 to 11 times the unconfined compression strength of the rock. (Generally these proposals parallel the principle that locally, when confined, concrete can withstand higher stresses than indicated by cylinder compression tests.) The researchers considered various factors in

their model and comparisons, including unconfined compressive strength, overburden pressure, length of pile embedment in rock, and fracturing and weathering of the rock.

Generally, the researchers' model worked well for soft rocks (to 4.35 ksi) but overestimated ultimate bearing capacities for hard rocks.

The second edition of the AASHTO LRFD Specifications, 2000 Interim includes a 1985 method from the Canadian Geotechnical Society for determining the nominal end bearing resistance [AASHTO-LRFD-2nd 10.7.3.5]. However, the commentary states: "When this method is applicable, the rocks are usually so sound that the structural capacity will govern the design." In the third edition, 2006 Interim, the AASHTO LRFD Specifications state: "The nominal resistance of piles driven to point bearing on hard rock where pile penetration into the rock formation is minimal is controlled by the structural limit state" [AASHTO-LRFD-3rd 10.7.3.2.3]. Also: "Soft rock that can be penetrated by pile driving shall be treated in the same manner as soil for the purpose of design for axial resistance" [AASHTO-LRFD-3rd 10.7.3.2.2]. The commentary relies on local experience for definition of hard rock.

"Except for soft weathered rock, the structural capacity of the pile will generally be lower than the capacity of the rock to support loads for toe bearing piles on rock of fair to excellent quality as described in Table 9-7 [Hannigan et al. 2005]." (Table 9-7 indicates "fair" is a Rock Quality Designation (RQD) of 50% or more.) "The structural capacity, which is based on the allowable stress for the pile material, will therefore govern the pile capacity in many cases…. Piles supported on soft weathered rock, such as shale or other types of very poor or poor quality, should be designed on the results of pile load tests" [Hannigan et al. 2005].

"AASHTO limits the maximum allowable design stress to $0.25f_y$ (which refers to the AASHTO Standard Specifications). In conditions where pile damage is unlikely, AASHTO allows the design stress to be increased to a maximum of $0.33f_y$ provided static and/or dynamic load tests confirming satisfactory results are performed"

[Hannigan et al. 2005]. For Grade 36 piles these stresses are 9 ksi and 12 ksi, and for Grade 50 piles these stresses are 12.5 ksi and 16.5 ksi.

References

Hannigan, P.J., G.G. Goble, G.E. Likins, and F. Rausche. 2005. *Design and Construction of Driven Pile Foundations—Volume I.* National Highway Institute (NHI), Washington, DC.

Naval Facilities Engineering Command (NAVFAC). 1986. *Soil Mechanics Design Manual 7.01*. Alexandria, VA. Serrano, A. and C.

Olalla. 2002. "Ultimate bearing capacity at the tip of a pile in rock—part 2: application."

International Journal of Rock Mechanics and Mining Sciences, Volume 39, Issue 7, 847-866.

9 April 2001 ~ Battered Pile Capacity and Lateral Load Capacity for Pier Design

Steel H-pile lateral load examples:

(1) Lateral load, assumed resistance, LRFD, strength and service limit states, for comparison with (2) and (3)

(2) Lateral load, Broms hand computation method, for comparison with (1) and (3)

(3) Lateral load, LPILE software, LRFD, strength and service limit states, for comparison with (1) and (2)

(1) Lateral load, assumed resistance, LRFD, service and strength limit states, for comparison with (2) and (3)

Examples (1), (2), and (3) make use of the following given information; however, not all of the information is needed for each example.

Given: Vertical pile, HP 10x57 embedded 12 inches into pier footing (fixed head)

Service limit state loads 6 kips lateral, not sustained; 100 kips vertical

Factored strength limit state loads 10 kips lateral; 145 kips vertical

Lateral load resisted by weak axis bending

Pile designed for end bearing on rock 28 feet below footing

Soft clay soil with average N = 3, single layer, no scour

Soil properties γ = 110 pcf, q_u = 0.75 ksf [Hannigan et al. 2005, C6.2.4.5]

Check vertical load at strength limit state: {145 k} < {$\varphi_c P_n$ = 0.6*243 = 145.8 k}, OK

The nominal pile resistance is taken from BDM Table 6.2.6.1-1.

Check lateral load at service limit state: {6 k} = {6 k}, OK

The lateral load limit is taken from BDM Table 6.2.6.1-2.

Check lateral load at strength limit state: {10 k} < {φP_n = 1.0*18 = 18 k}, OK

The lateral load limit is taken from BDM Table 6.2.6.1-2.

<u>All checks are satisfactory</u>.

(2) Lateral load, Broms hand computation method, for comparison with (1) and (3)

The Broms method is given in the NHI Reference for Course 132021 and 132022 [Hannigan et al. 2005, C6.2.4.5] (Note that the Evans and Duncan method [Brockenbrough 1997, C6.2.4.5] does not consider loads with respect to the weak axis and thus is not applicable for this example.)

Given: See Example (1).

Step 1: Soil type is cohesive (clay).

Step 2: Coefficient of horizontal subgrade reaction. Refer to Table 9-13 [Hannigan et al. 2005, C6.2.4.5].

$K_h = n_1 n_2 80 q_u/b = (0.32)(1.00)(80)(750)/(0.833)(1728) = 13.34$ pci

Step 3: No K_h adjustments are necessary. Step 4: Pile parameters

E = 29,000,000 psi, I = 101 in^4, S = 19.7 in^3, f_y = 50,000 psi

D = 336 in, C_s = 1.5, M_y = 1,477,500 in-lb

Step 5: Embedment factor

$\beta_h = (K_h b/4EI)^{0.25} = (13.34*9.99/4*29000000*101)^{0.25} = 0.0103$

Step 6: Dimensionless length factor

$\beta_h D = (0.0103)(336) = 3.47$

Step 7: Long or short pile?

{$\beta_h D$ = 3.47} > 2.25, therefore pile is long.

Step 8: Other soil parameters

$c_u = q_u/2 = 750/2 = 375$ psf

Step 9: Ultimate lateral load for a single pile

$M_y/c_u b^3 = 1477500/(375/144)(9.99^3) = 568$

Figure 9.38 [Hannigan et al. 2005, C6.2.4.5] extrapolated: $Q_u/c_u b^3 = 150$

$Q_u = (150)(375/144)(9.99^3) = 39031$ lb

Assuming Q_u is the same as P_n,

{φPn = (1.00)(39.03) = 39.03 kips} > {10 kips}, OK

Step 10: Maximum working load for a single pile

$Q_m = Q_u/2.5 = 39031/2.5 = 15{,}612$ lb, {15.61 k} > {6 k}, OK

Step 11: Working load for a single pile based on deflection

Figure 9.42 [Hannigan et al. 2005, C6.2.4.5]: $yK_h bD/Q_a = 3.5$ If y = 0.25 in, $Q_a = (0.25)(13.34)(9.99)(336)/3.5 = 3200$ lb,

Or if Q_a = 6 k, {y = (3.5)(6000)/(13.34)(9.99)(336) = 0.47 in} > {0.25 in}, NG

The Broms method predates LRFD and uses a factor of safety of 2.5, but the method obviously permits use of the pile under service or strength limit state lateral loads. It does not, however, give a deflection less than 0.25 inches, which would cause the pile to be <u>rejected</u>.

(3) Lateral load, LPILE software, LRFD, service and strength limit states, for comparison with Example (1) and (2)

Given: See Example (1).

Determine input quantities in lb and inch units

Unit weight = 110/1728 = 0.0637 lb/in^3

Undrained cohesion = (750/2)/144 = 2.60 lb/in^2

Soil strain = ε_{50} = 0.02 [Hannigan et al. 2005, C6.2.4.5]

Input title: HP 10x57 weak axis in soft silty clay, 28 feet to end bearing Input pile properties: 336, 100, 0, 0

Input pile sectional properties: 1: 0, 9.99, 101, 16.8, 29000000

2: 336, 9.99, 101, 16.8, 29000000

Input loading type: static

Input boundary conditions and loading: 1, shear and slope, 6000, 0, 100000

2, shear and slope, 10000, 0, 145000

Input soil layers: soft clay, 0, 336 Input soft clay:

1: 0.0637, 2.60, 0.02

2: 0.0637, 2.60, 0.02

Output: 0.249 inches lateral deflection at 6-kip service limit state load 564106 in-lb moment at 10-kip factored strength limit state load

Check lateral deflection at service limit state: {0.249 in} < {0.25 in}, OK Check pile head at strength limit state:

P_u = 145 k, M_{uy} = 564 in-k, V_u = 10 k

$P_r = \varphi_c P_n$ = (0.7)(0.66^0)(16.8)(50) = 588 k [AASHTO-LRFD 10.7.3.13.1, 6.9.4.1] $M_{ry} = \varphi_f M_{ny}$ = (1.0)(30.3)(50) = 1515 in-k

P_u/P_r = 145/588 = 0.247, therefore

$P_u/P_r + (8/9)(M_{ux}/M_{rx} + M_{uy}/M_{ry}) < 1.0$ [AASHTO-LRFD 6.9.2.2]

145/588 + (8/9)(564/1515) = 0.591 < 1.0, OK

$\varphi_v V_n = \varphi_v C V_p = \varphi_v C(0.58F_{yw}Dt_w$ Note that this assumes web will be in shear,

which is not true in this example for load causing y-axis bending. Actual resistance will be about twice this value, but AASHTO LRFD Specifications do not cover shear applied to flanges. This shear check is not likely to control even with the lower, incorrect resistance used above.

Check $D/t_w < 1.12(Ek/F_{yw})^{0.5}$ [AASHTO-LRFD 6.10.9.3.1]

9.99/0.565 < 1.12(29000*5.0/50)$^{0.5}$, 17.68 < 60.31, therefore C = 1.0 $\varphi_v C(0.58F_{yw}Dt_w$ = (1.0)(1.0)(0.58)(50)(9.99)(0.565) = 163.69 k > 10 k, OK

See note above regarding actual resistance.

The pile meets the applicable criteria at the service and strength limit states. If the lateral load were increased to the maximum that would meet the combined compression and flexure check, the load would be 22.79 k, more than three times the service load that causes a 0.25-inch deflection.

C6.2.6.2 Concrete-filled steel pipe

In 2009 the Soils Design Unit recommended that steel pipe piles generally not be used in soils with consistent N-values greater than 40.

C6.2.6.3 Timber

Carpet padding and plan note

For timber piles in integral abutment bridges 150 to 200 feet (45.700 to 61.000 m) in length, pile heads are to be wrapped in carpet padding. The basic detail and note regarding the padding probably were developed in 1965 at the

time the bridge on Stange Road just north of 13th Street in Ames was designed, but the detail and note were modified in later years (prior to 1979).

The 1979-detail showed the timber pile embedded 2’-0 (600 mm) in the abutment and 3’-0 (1000 mm) rug padding starting at 3 inches (75 mm) from the top of the pile. The top 3 inches (75 mm) of the pile was embedded in the abutment concrete, but below the pile was padded. The pile head was encircled with a spiral with a note: “Spiral at top of each pile 7 turns of #2 bar, 21”

diameter, 3” pitch with 2-7/8” C0.69 spacers punched to hold spiral” (“Spiral at top of each pile 7 turns of W5 wire, 535 mm φ, 75 mm pitch with 2-L22 x 22 x 3.2 spacers punched to hold spiral”. This metric note is more recent and has a change in spacer.).

The separate 1979-note for the padding is as follows:

> AFTER PILES ARE CUT OFF, THE UPPER 3’, EXCEPT AS SHOWN, IS TO BE WRAPPED WITH A DOUBLE THICKNESS OF RUG PADDING HELD IN PLACE BY TACKING WITH GALVANIZED ROOFING NAILS AND WRAPPED WITH #14 GAGE GALVANIZED WIRE AT 4” PITCH. CARE IS TO BE TAKEN NOT TO DAMAGE PADDING WHEN PLACING CONCRETE. RUG PADDING MAY BE EITHER OF THE FOLLOWING:
>
> (1) HAIR AND JUTE RUG PADDING, RUBBERIZED ON BOTH SIDES, AND WEIGHING NOT LESS THAN 47 OZ. PER SQ. YD.
>
> (2) BONDED URETHANE OR BONDED POLYFOAM WITH A MINIMUM DENSITY OF 5 LBS. PER CU. FT. AND SHALL BE AT LEAST ½ IN. THICK. (MATERIAL LESS THAN ½ IN. IN THICKNESS MAY BE USED, BUT WILL REQUIRE ADDITIONAL WRAPS FOR A TOTAL OF AT LEAST ONE INCH.)

Driving limit of 160 tons

Prior to the conversion to LRFD the Iowa DOT had a service driving limit of 40 tons (which scales up to an LRFD target driving resistance of 160 tons) to avoid overdriving [IDOT SS, Series of 2012 and earlier, 2501.03, O, 2, c]. For one 1970s era western Iowa bridge, timber piles were driven to 40 tons or more, which was considered hard driving and, from the pile logs, seemed to be causing pile damage. At 40 tons formula-driven capacity, the penetration was about 0.22 inches per blow (or 55 blows/foot) for the last 10 blows. The number of blows per foot will vary based on several factors so 55 blows/foot is not necessarily an appropriate limit in all cases, and therefore the Bureau has retained a driving limit in tons.

The Pile Driving Contractors Association (PDCA) has developed Specification 102-07, “Installation Specification for Driven Piles”. C4.3.4 Practical Refusal states “In cases where the driving is easy until near the end of driving, a higher blow count may sometimes be satisfactory, but if a high blow count is required over a large percentage of the depth, even 10 blows per inch may be too large. Blow counts greater than 10 blows per inch should be used with care, particularly with concrete or timber piles.”

Prior to 2007 ~ Service load design for timber piles in piers and stub abutments

> [AASHTO …] refers to the AASHTO Standard Specifications.

The Iowa DOT Standard Specifications [IDOT SS 4165.03, H] give dimension specifications for timber piles ranging from less than 20 feet to over 60 feet. However, Bureau practice for bridge foundations has limited timber piles to lengths of 20 to 55 feet.

Past Bureau practice has implied that timber piles only need to be checked for geotechnical capacity by limiting the capacity for pier and stub abutment piles to 20 tons for piles 20 to 30 feet long and to 25 tons for piles 35 to 55 feet long. These capacities run counter to the axial structural capacity for an end bearing pile, which is based on the tip area of the pile and which decreases with pile length as the following computations show.

- 20- to 35-foot pile, minimum tip diameter = 8 inches [IDOT SS 4165.03, H], resulting tip area = 50.27 in^2, allowable working stress for douglas fir or southern pine = 1200 psi [AASHTO Table 4.5.7.3A], load duration factor for vehicle live load = 1.15 [AASHTO Table 13.5.5A], and capacity = 69.37 kips or 34.69 tons
- 40- to 55-foot pile, minimum tip diameter = 7 inches [IDOT SS 4165.03, H], resulting tip area = 38.48 in^2, allowable working stress for douglas fir or southern pine = 1200 psi [AASHTO Table 4.5.7.3A], load duration factor for vehicle live load = 1.15 [AASHTO Table 13.5.5A], and capacity = 53.10 kips or 26.55 tons

Within the design rules and specifications, the structural capacity for pier and stub abutment piles should not control. (The piles also should be checked for dead load alone with a load duration factor of 0.90. Because of the relative magnitudes of live and dead load this dead-load case typically does not control.)

It is interesting to note that *Foundation Soils Information Chart, Pile Foundation* (Blue Book) assumes a relatively large end area of 72 in^2, which correlates with a tip diameter of 9.57 inches, more than required by the standard specifications [IDOT SS 4165.03, H]. A note requires that geotechnical bearing be adjusted for a different tip dimension, which generally would require reduction of the tabulated values. In Appendix B, Table 5 of the Blue Book the average wood pile diameter is given as 10 inches, and after Table 9 the timber pile design bearing is given as 900 psi. Even though the average timber pile diameter is about 10 inches it would appear that the Blue Book is not consistent with the present Iowa DOT Standard Specifications.

Based on the example for downdrag in Appendix A of the Blue Book it appears that downdrag could easily cause overstress of a timber pile during driving. To avoid overstress the Bureau in the past had a 40-ton driving limit [IDOT SS 2501.03, O, 2, c]. Generally, it would seem inadvisable to use timber piles when they will be subjected to downdrag.

Prior to 2007 ~ Service load design for piles for integral abutments in prebored holes

Past Bureau practice limited timber piles for integral abutments to 20 tons. The reason stated for this limit was indeterminate

bending stresses (which are likely to occur for bridges less than 150 feet long for which the pile heads are not wrapped in carpet padding).

Another possible reason for the limit is reduction in capacity due to lack of lateral support in a prebored hole. Prebored holes are required for bridges longer than 130 feet. At the time the 20-ton rule was instituted the typical prebore was 8 feet. If one makes a few assumptions, the column stability factor reduction can be estimated for a pile in an 8-foot prebored hole.

- Assume pile is fixed 4 feet below bottom of prebore. This distance will vary depending on stiffness of soil but generally is in the range of 2.5 to 4 feet. The equations for preliminary design in the AASHTO LRFD Specifications indicate that the distance would exceed 4 feet only for very loose submerged sand [AASHTO-LRFD C10.7.3.13.4].
- Assume K-factor for slenderness is 0.8. This assumption is more liberal than a flagpole assumption (K=2.1), but reasonable considering the overall superstructure, fixity at one pier, and embankment restraints due to pavement and wing walls. This assumption also is consistent with the ISU research report on which design for integral abutment piles is based [Greimann et al 1987].
- Assume average pile diameter for the top 12 feet of pile is 8.7 inches (interpolated from Southern Pine Foundation Piling—Specified Tip Circumferences with Corresponding Minimum Butt Circumferences, ASTM D25). The equivalent square area of the pile then would have a side dimension of 7.71 inches.
- Assume Service Load Group I, and therefore load duration factor = 1.15 for vehicle live load [AASHTO

  Table 13.5.5A].
- Assume F_c = 1200 psi for Douglas fir or southern pine under wet or dry conditions [AASHTO 4.5.7.3].
- Assume K_{cE} = 0.418 as for glulam timber [AASHTO 13.7.3.3]. The AASHTO Standard Specifications do not specifically cover timber piles, but the AASHTO LRFD Specifications list the same value of K_{cE} for glulam and round piles [AASHTO-LRFD 8.8.2].

With the assumptions above, the column stability reduction is about 0.89, which would reduce the pile minimum structural capacity to 23.63 tons but not less than 20 tons. The additional capacity provides some margin for bending stresses that occur as the bridge expands or contracts. Additionally, the AASHTO Service Load Groups that include temperature loads have a stress increase of 125% or 140%.

A separate check with the assumptions above but with a 10-foot prebored hole, a 200-foot long bridge, and a moment due to thermal expansion under Load Group IV gave a performance ratio of 0.542, indicating that a timber pile would be acceptable considering column stability and bending.

2007 and later ~ LRFD geotechnical design

The traditional maximum limits for geotechnical capacity of timber foundation piles have served well, and there appeared to be no reason to alter the limits in 2007 for the interim pile design method. Therefore, to fit the service load design limits to LRFD, the Bureau adjusted service limits with an average load factor, γ, of 1.45 divided by a resistance factor, φ, of 0.725 [BDM C6.2.4.3]. The adjustment computes to 2.00. For stub abutments and piers the maximum LRFD nominal resistance then was 80 kips for piles 20 to 30 feet long and 100 kips for piles 35 to 55 feet long. Also, the maximum LRFD nominal resistance for timber piles in integral abutments was 80 kips. As a general check on these limits, the Blue Book states that the majority of the timber pile load tests experienced yield at no more than 75 tons (150 kips) and that the ultimate load (used in design) should not exceed 60 tons (120 kips), both of which are greater than the interim LRFD policy limits.

With the ISU 2012 calibration the geotechnical φ-values vary with soil type and construction control and usually are less than 0.725. Thus the same nominal geotechnical resistances no longer will give consistent design results. To use the traditional resistances it was necessary to consider the structural rather than geotechnical resistance. For a nominal geotechnical resistance of 80 kips and φ of 0.725, the factored geotechnical resistance is 58 kips. If the factored structural resistance also were 58 kips, the nominal structural resistance using a parallel-with-grain φ of 0.9 would be 58/0.9 = 64 kips, and that nominal resistance has been written into the manual for integral abutment piles and 20-30-foot piles. For 35-55-foot piles the comparable nominal structural resistance is about 80 kips.

To determine the contract length and target driving resistance the designer should follow the latest guidelines in the manual.

2007 and later ~ LRFD structural design

For fully embedded, end-bearing piles the usual design procedure is to check axial compression at the pile tip. The various factors necessary for the check are given in the AASHTO LRFD Specifications [AASHTO-LRFD 8.4 and 8.5.2.2]. For friction-bearing or friction- and end-bearing piles a cross section at the butt or elsewhere along the pile may control.

In cases where a timber pile is unsupported over some length, the pile should be checked structurally using the information in Chapter 8 of the AASHTO LRFD Specifications.

If the 64-kip limit for maximum nominal structural resistance for an integral abutment pile is followed, the designer need not check an integral abutment timber pile in a prebored hole 10 feet deep or less.

Driving limits

Damage due to hard driving has been a concern for timber piles. When the Bureau often used treated timber piles in the1970s (and earlier) timber piles were not to be used in glacial clays with N greater than or equal to 30. In 1982 the guideline was revised downward so that timber piles were not to be used in any soils in which N exceeded 25. Since 1964 the Standard Specifications have required that timber piles not be driven in excess of 40 tons. That guideline exceeded the maximum allowable design load and thus was a limit used in the field to prevent overdriving. At this time, for LRFD no comparable maximum driving limit has been set. However, the Pile Driving Contractors Association (PDCA) recommends that blow counts above 10 blows/inch (120 blows/foot) be used with care, especially for concrete or timber piles.

References

American Forest and paper Association (AF&PA) (2001). *National Design Specification, ANSI/AF&PA NDS-2001.*

AF&PA, American Wood Council. Washington, DC.

ASTM International (2005). "Standard Specification for Round Timber Piles, D 25." ASTM International. West Conshohocken, PA.

Collin, J.G. (2002). *Timber Pile Design and Construction Manual.* Timber Piling Council, American Wood Preservers Institute. Fairfax, VA.

Dirks, K.L. and P. Kam. (1994). *Foundation Soils Information Chart, Pile Foundation*. Soils Survey Section, Highway Division, Iowa DOT. Ames, IA. (Blue Book)

Greimann, L.F., R.E. Abendroth, D.E. Johnson., and P.B. Ebner. (1987). *Pile Design and Tests for Integral Abutments, Final Report.* Department of Civil Engineering, Iowa State University. Ames, IA.

Pile Driving Contractors Association (2007). "Installation Specification for Driven Piles, PDCA Specification 102-07." PDCA, Orange Park, FL.

C6.2.6.4 Prestressed concrete

The Bureau has relaxed limitations for use of prestressed concrete piles since the 1970s. In 1975 a memo recommended that concrete piles not be used in very firm glacial clay or very firm sandy glacial clay when N values exceed 20. The limit was set due to driving experience. Since the late 1980s the rule has been revised to not drive prestressed piles more than 10 feet through soils with N values greater than 40. In 1995 a memo advised that prestressed piles should tip out in soils with N values from 25 to 40 and which do not contain boulders. In 2009 the Soils Design Unit recommended that prestressed concrete piles generally not be used in soils with consistent N-values greater than 30 to 35.

In 1995 the Bureau set a service load design bearing capacity of 50 tons (which a few years earlier had been 40 tons) for a 12-inch square prestressed concrete pile. It was unclear as to whether the limit was structural or geotechnical; it has been assumed to be structural. The limit has been fitted to a LRFD nominal structural resistance using an average load factor of 1.45 and a resistance factor of 0.75 for a compression controlled section [AASHTO-LRFD 5.5.4.2] as follows:

(50)(2)(1.45)/0.75 = 193 kips, round to 200 kips.

LRFD Pile Design Examples

Iowa DOT ~ Bridges and Structures Bureau ~ July 2026

Overview

These examples in customary U.S. (or English) units have been extracted and revised from the following publication:

> Green, Donald, Kam W. Ng, Kenneth F. Dunker, Sri Sritharan, and Michael Nop. (2012). *Development of LRFD Procedures for Bridge Pile Foundations in Iowa - Volume IV: Design Guide and Track Examples.* IHRB Projects TR-573, TR-583, and TR-584. Institute for Transportation, Iowa State University, Ames, Iowa.
>
> https://intrans.iastate.edu/app/uploads/2018/03/lrfd_vol_iv_final_w_cvr.pdf

In general, the revisions are intended to relate the examples specifically to Iowa Department of Transportation (Iowa DOT), Bridges and Structures Bureau (OBS) policy in the Bridge Design Manual (BDM). A summary of the revisions from Volume IV follows.

- Move the contract length and resistance and the driving and construction control notes from Volume IV Articles 2.4.1-2.4.4 to BDM 13.8.2 listing (of Bridge Substructure CADD Notes), E718, E719, E818, and E819.

- Edit and move all of the appendices except Appendix E (Derivation of Equations…) from Volume IV to the Bridge Design Manual.
    - Appendix A to BDM 6.2.7 Nominal geotechnical resistances
    - Appendix B to BDM 6.2.8 Soil categories
    - Appendix C to BDM 6.2.9 Resistance factors
    - Appendix D to BDM 6.2.10 Cohesive soil setup
    - Appendix F to BDM 6.2.4.2 Pile length
    - Appendix G and H to various BDM articles

- Add structural design to Step 3 of all examples.

Because the Iowa DOT pile load tests used in calibration were conducted at a time when Standard Penetration Test hammers averaged about 60% efficiency and because the industry is moving toward a 60% standard, in the future the Iowa DOT intends to use N_{60}-values from Standard Penetration Tests. Until N_{60}-values are available the designer may use uncorrected N-values as shown in these examples. Uncorrected N-values from drilling rigs with modern automatic trip hammers may increase pile contract length slightly and reduce target driving resistance slightly but are not expected to have significant effects. (For typical design situations the Iowa DOT does not intend to use the overburden correction [AASHTO LRFD 10.4.6.2.4].)

Setup in cohesive soils may be used to reduce the end-of-drive (EOD) driving target for steel H-piles with WEAP construction control, as shown in several examples. However, at this time setup should not be used with timber, steel pipe, or prestressed concrete piles or with Iowa DOT

ENR Formula construction control.

There are eleven design examples, which are arranged in three tracks as listed in the table below. The tracks are intended to fit different design and construction practice in Iowa as noted.

> Track 1: Standard Iowa DOT design and standard construction control with wave equation (WEAP) for ordinary projects on state, county, or city highways
>
> Track 2: Standard Iowa DOT design and alternate construction control with the Iowa DOT ENR Formula (from the Iowa DOT Standard Specifications for Highway and Bridge Construction, Series 2012 Revised for 2013, 2501.03, M, 2) for ordinary projects on county or city highways (but not on state highways)
>
> Track 3: Standard Iowa DOT design and alternate construction control with special methods for large and other special projects on state, county, or city highways

On the following page is a table summarizing characteristics of the examples, and following the table are brief descriptions of the examples.

Summary of characteristics of the track examples

Track Number	Pile Type	Example Number [Page]	Substructure Type	Soil Type	Special Consider-ations	Construction Controls Driving Criteria	Construction Controls Planned Retap 3 Days after EOD
1	H-Pile	1 [1]	Integral Abutment	Cohesive	---	WEAP	No
		2 [18]	Pier	Mixed	Scour		
		3 [29]	Integral Abutment	Cohesive	Downdrag		
		4 [41]	Pier	Non-Cohesive	Uplift		
		5 [51]	Integral Abutment	Cohesive	End Bearing in Bedrock		
	Pipe Pile	6 [60]	Pile Bent	Non-Cohesive	Scour		
	Prestressed Concrete Pile	7 [69]	Pile Bent	Non-Cohesive	Scour		
2	H-Pile	1 [78]	Integral Abutment	Cohesive	---	Iowa DOT ENR Formula	
	Timber Pile	2 [92]	Integral Abutment	Non-Cohesive	---		
3	H-Pile	1 [102]	Integral Abutment	Cohesive	---	PDA/ CAPWAP and WEAP	
		2 [116]	Integral Abutment	Cohesive	Planned Retap	WEAP	Yes

Abbreviations:

- CAPWAP, Case Pile Wave Analysis Program
- DOT, Department of Transportation
- ENR, Engineering News-Record
- EOD, end of drive
- PDA, Pile Driving Analyzer®
- WEAP, Wave Equation Analysis of Pile Driving (and successor programs such as GRLWEAP by GRL Engineers, Inc.), often referred to simply as "wave equation"

Each design example is a stand-alone document, but the first example in each track has the most extensive explanations and notes. A brief description of each design example is provided below.

Track 1, Example 1

As the first example in the Design Guide, this example provides detailed calculations that are not included in all other examples, such as:

- Selection of unit nominal resistance based on soil type and standard penetration test (SPT) N-value.
- Determination of setup factor for cohesive soil based on average SPT N-value.
- Determination of nominal driving resistance from blow count during construction.
- Determination of generalized soil category based on the ratio of pile penetration in cohesive and non-cohesive layers.
- Incorporation of setup into driving resistance estimation for cohesive soils.
- Discussion on pile retap 24 hours after EOD for piles with driving resistance at EOD less than the required nominal driving resistance.

Track 1, Example 2

This example illustrates that for a friction pile subject to scour, the contribution to side resistance from the soil above the scour interval should be neglected to estimate the nominal bearing resistance (Design Step 7), while this contribution should be included to estimate driving resistance (Design Step 8). The increase in the length of the friction pile to account for scour will result in additional driving resistance that must be accounted for when the piles are driven.

Track 1, Example 3

This example highlights the effects of downdrag on pile design: 1) the soil above the neutral plane does NOT contribute to side resistance; 2) downward relative movement of soil above the neutral plane exerts drag load to the pile. This example also demonstrates how prebored holes can be used to relieve part of the downdrag load.

Track 1, Example 4

This design example includes an uplift resistance calculation, in addition to the routine pile axial compression resistance calculation. Resistance factors for uplift are taken as 75% of the resistance factors for axial compression resistance.

Track 1, Example 5

This design example is for end bearing piles that are driven through cohesive soil and tipped out in rock. A resistance factor of 0.70 was used for end bearing in rock based on successful past practice with WEAP analysis and the general direction of Iowa LRFD pile testing and research. This design example presents the procedures to calculate pile resistance from a combination of side friction in soil and end bearing in rock. It also demonstrates how to consider the partial setup effect from the side resistance in cohesive soil.

Track 1, Example 6

This design example illustrates design of displacement pipe piles that develop frictional resistance in non-cohesive soil at a pile bent that is exposed to possible scour.

Track 1, Example 7

This design example is a companion to Example 6 and is for prestressed concrete friction piles that are driven in non-cohesive soil at a pile bent that is exposed to possible scour.

Track 2, Example 1

This design example demonstrates how to use the Iowa DOT ENR (Engineering News-Record) Formula to estimate nominal pile driving resistance from observed blow counts during pile driving. The only difference between this design example and Track 1, Example 1 is the construction control. It should be noted that the resistance factors used in this design example are lower than those in Track 1, Example 1, since more uncertainty is involved when using construction control based on the Iowa DOT ENR Formula instead of a wave equation analysis.

Track 2, Example 2

This design example is for timber piles that are driven in non-cohesive soil using the Iowa DOT ENR Formula for construction control.

Track 3, Example 1

This design example is basically the same as Track 1, Example 1, with additional construction control involving a pile driving analyzer® (PDA) and CAPWAP analyses. The purpose of this design example is to demonstrate that when more strict construction control is applied, fewer uncertainties are involved, since the pile resistance can be field-verified by PDA/CAPWAP tests. Therefore, higher resistance factors can be used; and this results in shorter pile length.

Track 3, Example 2

This design example is basically the same as Track 1, Example 1, with additional construction control involving pile retaps (or restrikes) at 3 days after EOD. It should be noted that the resistance factors with special consideration of pile setup are for 7-day retap. This design example demonstrates how to estimate the nominal driving resistance at 3 days after EOD using the setup factor chart. It also demonstrates that higher resistance factors can be used, when retap is planned, since the retap is used to verify the increase in geotechnical pile resistance as a result of pile setup.

In order to work through a design example the designer will need the AASHTO LRFD Specifications to determine the factored load and several sections from the Bridge Design Manual to determine resistance factors, resistances, and appropriate plan notes:

- 6.2 Piles
- 6.5 Abutments
- 6.6 Piers
- 13 CADD Notes

On the next page is a summary of the load factors, resistance factors, and resistances at the strength limit state and information sources for the four pile types that may be used by the Bridges and Structures Bureau. The Bureau most commonly uses H-piles.

Factor	Steel H-pile	Timber pile	Prestressed concrete pile	Concrete-filled pipe pile
Structural load factors, γ	AASHTO 3.4.1	AASHTO 3.4.1	AASHTO 3.4.1	AASHTO 3.4.1
Structural load factor for downdrag, γ_{DD}	BDM 6.2.4.3 $\gamma_{DD} = 1.0$	BDM 6.2.4.3 $\gamma_{DD} = 1.0$	BDM 6.2.4.3 $\gamma_{DD} = 1.0$	BDM 6.2.4.3 $\gamma_{DD} = 1.0$
Downdrag load, DD	BDM Table 6.2.7-2	BDM Table 6.2.7-2	BDM Table 6.2.7-2	BDM Table 6.2.7-2
Structural resistance factors, ϕ	AASHTO 6.5.4.2	AASHTO 8.5.2.2	AASHTO 5.5.4.2	AASHTO 6.5.4.2
Structural bearing resistance factor for pile bent, ϕ	BDM Table 6.6.4.2.1.1, $\phi = 0.70$		BDM Table 6.6.4.2.1.2, $\phi = 0.75$	BDM Table 6.6.4.2.1.3, $\phi = 0.80$
Structural bearing resistance, R_n	BDM 6.2.6.1 SRL-1, SRL-2, SRL-3, SRL-4	BDM 6.2.6.3 80 kips, 100 kips	AASHTO Section 5	AASHTO 6.9.5, 6.12.2.3
Structural bearing resistance for integral abutment, R_n	BDM Tables 6.5.1.1.1-1 and 6.5.1.1.1-2	BDM 6.2.6.3 64 kips		
Structural bearing resistance for pile bent, R_n	BDM Table 6.6.4.2.1.1 or P10L		BDM Table 6.6.4.2.1.2 or P10L	BDM Table 6.6.4.2.1.3 or P10L
Structural lateral resistance	BDM 6.2.6.1 18 kips	BDM 6.2.6.3 7 kips		
Geotechnical bearing resistance factor, ϕ	BDM Table 6.2.9-1	BDM Table 6.2.9-1	BDM Table 6.2.9-1	BDM Table 6.2.9-1
Geotechnical uplift resistance factor, ϕ	BDM Table 6.2.9-2	BDM Table 6.2.9-2	BDM Table 6.2.9-2	BDM Table 6.2.9-2
Geotechnical end resistance, R_n	BDM Table 6.2.7-1	BDM Table 6.2.7-1	BDM Table 6.2.7-1	BDM Table 6.2.7-1
Geotechnical friction resistance, R_n	BDM Table 6.2.7-2 and 6.2.7 discussion	BDM Table 6.2.7-2 and 6.2.7 discussion	BDM Table 6.2.7-2 and 6.2.7 discussion	BDM Table 6.2.7-2 and 6.2.7 discussion
Driving resistance factor, ϕ_{TAR}	BDM Table 6.2.9-3 Fig 6.2.10	BDM Table 6.2.9-3 0.35 or 0.40	BDM Table 6.2.9-3 Fig 6.2.10	BDM Table 6.2.9-3 Fig 6.2.10

CADD plan notes	BDM 13.8.2: E718, E719, E818, E819	BDM 13.8.2: E718, E719, E818, E819	BDM 13.8.2: E718, E719, E818, E819	BDM 13.8.2: E718, E719, E818, E819

Table 1-Load factors, resistance factors, resistances at strength limit state-AASHTO and BDM sources by pile type

Track 1, Example 1

Driven H-Pile in Cohesive Soil with Construction Control Based on Wave Equation and No Planned Retap

General design and construction steps to be modified for project conditions

Design Steps

Step 1 Develop bridge situation plan (or TS&L, Type, Size, and Location). (1)

Step 2 Develop soils package, including soil borings and foundation recommendations. (1)

Step 3 Determine pile layout, pile loads including downdrag, and other design requirements. (1) This step includes structural checks.

Step 4 Estimate nominal geotechnical resistance for friction and end bearing.

Step 5 Select resistance factor(s) to estimate pile length based on the soil profile and construction control.

Step 6 Calculate required nominal pile resistance, R_n .

Step 7 Estimate contract pile length, L, considering downdrag, scour, pile uplift, lateral loading, and unbraced length, if applicable.

Step 8 Estimate target nominal pile driving resistance, $R_{ndr\text{-}T}$.

Step 9 Prepare CADD notes for bridge plans.

Step 10 Check the design. (2)

Construction Steps

Step 11 Request and check contractor's hammer data, and prepare bearing graph for WEAP control or other necessary items for alternate methods of construction control.

Step 12 Observe construction, record driven resistance, and resolve any construction issues.

(1) These steps determine the basic information for geotechnical pile design and will vary depending on bridge project and Bureau practice.

(2) Checking will vary depending on bridge project and Bureau practice.

Within the Bridges and Structures Bureau at the Iowa DOT, the design steps that determine the basic information necessary for design of a steel H-pile generally follow as indicated in Steps 1-3. The steps involve communication among the preliminary design engineer, soils design engineer, and final design engineer. In other organizations the basic information may be determined differently, but that process generally should not affect the overall design of the pile.

Step 1 - Develop bridge situation plan (or TS&L, Type, Size, and Location)

For a typical bridge the preliminary design engineer plots topographical information, locates the bridge, determines general type of superstructure, location of substructure units, elevations of foundations, hydraulic information (if needed), and other basic information to characterize the bridge. The preliminary design engineer then prepares a TS&L sheet that shows a plan and longitudinal section of the bridge.

For this example for a state project, the TS&L gives the following information needed for design of abutment piles:

- 120-foot single span, prestressed concrete beam superstructure
- Zero skew

- Integral abutments (because these are standard practice for non-skewed concrete bridges less than 575 feet in length with end or single spans not exceeding the length of standard prestressed concrete beams) [BDM 6.5.1.1.1]
- Pile foundations, no prebored holes (because the bridge length is less than 130 feet) [BDM 6.5.1.1.1]
- Bottom of west abutment footing elevation 433 feet

Step 2 - Develop soils package, including soil borings and foundation recommendations
Based on location of the abutments the soils design engineer orders soil borings, typically at least one per substructure unit. When the engineer receives the boring logs he/she arranges for them to be plotted on a longitudinal section, checks any special geotechnical conditions on the site, and writes a recommendation for foundation type with any applicable special design considerations.

For this example, the recommendations are the following:

- Friction piles that tip out in the firm glacial clay layer
- Steel H-piles for the integral abutments
- Structural Resistance Level – 1 (which does not require a driving analysis by the Construction and Materials Bureau during design [BDM 6.2.6.1])
- Normal driving resistance (This will lead to $\varphi_c = 0.60$ for the structural check.)
- No special site considerations for stability, settlement, or lateral movement (Therefore the Service I load will not be required for design.)
- Standard construction control based on WEAP analysis with no planned retap

The soil profile includes the following soil boring at the west abutment. Generally below the bottom of footing elevation there are three soil layers: 6 feet of soft silty clay, 9 feet of silty sand, and firm glacial clay to the bottom of the boring at 95 feet. Layer 3 is subdivided at a depth of 30 feet because nominal friction resistance step-increases at that elevation [BDM Table 6.2.7-2]. No groundwater was encountered in the boring.

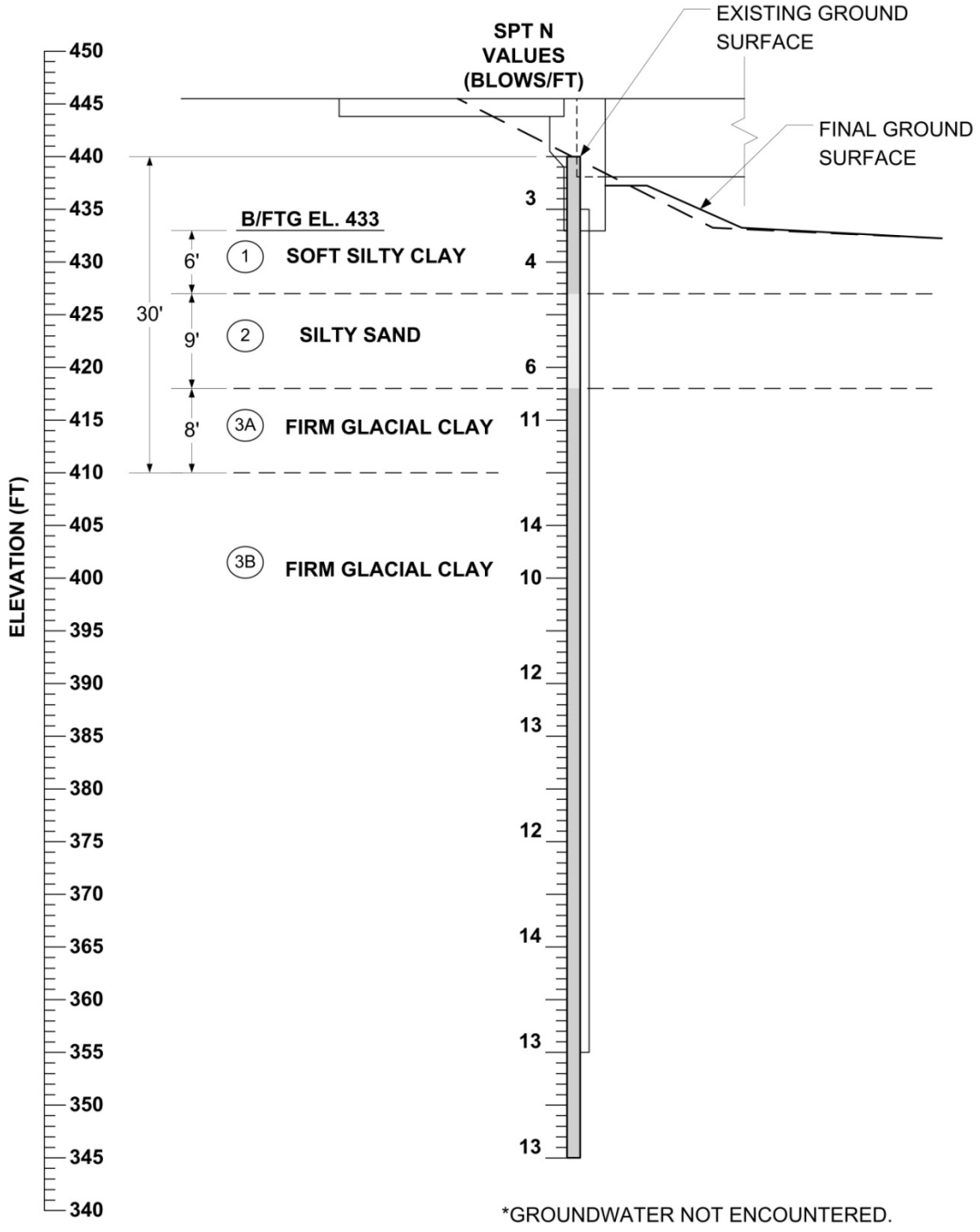

Track 1, Example 1-soil profile at west abutment

Step 3 - Determine pile layout, pile loads, and other design requirements. This step includes structural checks.

The final design engineer begins design of the abutment piles with the TS&L and the soils design package. Because the bridge has a prestressed concrete beam superstructure and integral abutments the engineer selects HP 10×57 piles, following Bridge Design Manual policy [BDM 6.5.1.1.1].

There is no uplift, downdrag, or scour. Because the bridge characteristics fall within integral abutment policy, the site has no unusual characteristics, the soils design engineer did not require further analysis, and construction will not be accelerated or delayed, there will be no need for lateral load or special analysis of the abutment piles. They may simply be designed for vertical load.

Notation: The same loads are designated in Step 3 with "P" (for structural checks) and in Steps 6 and 8 with "Q" (for geotechnical and driving checks).

For the west abutment

$$\Sigma\eta\gamma P + \gamma_{DD}DD = 895 + 0 = 895 \text{ kips} = P_u$$

The soils package indicates normal driving resistance, therefore

$$\varphi_c = 0.60$$

The soils engineer recommends SRL-1 for which

$$P_n = 243 \text{ kips [BDM Table 6.2.6.1-1]}$$

Considering the TS&L and other project factors the final design engineer selects BTC beams [BDM Table 5.4.1.1.1]. For integral abutments with BTC beams and prebored holes for the piles, the maximum P_n is 365 kips [BDM Table 6.5.1.1.1-1]. With the short span, the prebored holes are not necessary and, for this project, 365 kips would be the limit per integral abutment pile. The SRL-1 value controls, however.

Required number of piles

$$n = P_u/\varphi P_n = 895/(0.60)(243) = 6.14, \text{ round to 7 piles}$$

Each pile then must carry

$$P_u = 895/7 = 128 \text{ kips}$$

The pile layout will be seven piles under the abutment plus one pile for each wing extension as shown below. (For the number of beams the designer checks the minimum number of piles, and for the abutment dimensions the designer checks the pile spacing guidelines [BDM 6.2.4.1]. Those checks are not shown here.) In this case the wing extension piles are added for abutment stability and are moderately loaded so they need not be checked for structural resistance.

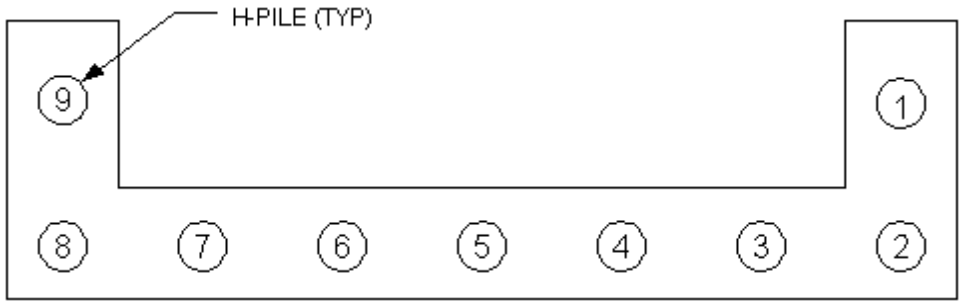

Track 1, Example 1-pile layout at west abutment

Step 4 – Estimate nominal geotechnical resistance for friction
Based on the west abutment soil boring and BDM Table 6.2.7-2, the final design engineer estimates the following nominal unit resistances for friction bearing.

Track 1, Example 1-estimated nominal unit geotechnical resistance

Soil Stratum	Soil Description		Stratum Thickness (ft)	Average SPT N Value (blows/ft)	Estimated Unit Nominal Resistance for Friction Pile (kips/ft)
1	Soft Silty Clay		6	4	0.8
2	Silty Sand		9	6	1.2
3A	Firm Glacial Clay	within 30 feet of natural ground elevation	8	11	2.8
3B		more than 30 feet below natural ground elevation	65	12	3.2

Abbreviation:

- SPT, standard penetration test

The firm glacial clay stratum has been divided into two parts, to delineate the embedded pile length that is within 30 feet of the natural ground surface as noted in the BDM geotechnical resistance chart [BDM Table 6.2.7-2]. Application of the chart to estimate the nominal resistance values is illustrated on the next page. Note that the SPT N values are too small for use of end bearing in Layer 3B [BDM Table 6.2.7-1].

Track 1, Example 1-geotechnical resistance chart [BDM Table 6.2.7-2]

SOIL DESCRIPTION	BLOW COUNT		ESTIMATED NOMINAL RESISTANCE VALUES FOR FRICTION PILE IN KIPS PER FOOT										
	N-VALUE		WOOD	STEEL "H"			PRESTRESSED			STEEL PIPE			
	MEAN	RANGE	PILE	10	12	14	12	14	16	10	12	14	18
Alluvium or Loess													
Very soft silty clay	1	0 - 1	0.8	0.4	0.8	0.8	0.8	0.8	0.8	0.4	0.4	0.4	0.8
Soft silty clay	3	2 - 4	1.2	0.8	1.2	1.2	0.8	0.8	0.8	0.8	0.8	0.8	1.2
Stiff silty clay	6	4 - 8	1.6	1.2	1.6	2.0	1.2	1.6	2.0	1.2	1.2	1.6	2.0
Firm silty clay	11	7 - 15	2.4	2.0	2.4	2.8	2.4	2.8	3.2	1.6	2.0	2.4	2.8
Stiff silt	6	3 - 7	1.6	1.2	1.6	1.6	1.6	1.6	1.6	1.2	1.2	1.6	1.6
Stiff sandy silt	6	4 - 8	1.6	1.2	1.6	1.6	1.6	1.6	1.6	1.2	1.2	1.6	1.6
Stiff sandy clay	6	4 - 8	1.6	1.2	1.6	2.0	2.0	2.0	2.4	1.2	1.6	1.6	2.0
Silty sand	8	3 - 13	1.2	1.2	1.2	1.6	1.6	1.6	1.6	0.8	0.8	1.2	1.6
Clayey sand	13	6 - 20	2.0	1.6	2.0	2.8	2.4	2.4	2.8	1.6	2.0	2.4	2.8
Fine sand	15	8 - 22	2.4	2.0	2.4	2.8	2.4	2.8	3.2	1.6	2.0	2.4	2.8
Coarse sand	20	12 - 28	3.2	2.8	3.2	3.6	3.2	3.6	4.0	2.0	2.4	2.8	3.6
Gravelly sand	21	11 - 31	3.2	2.8	3.2	3.6	3.6	3.6	4.0	2.0	2.4	2.8	3.6
Granular material	> 40	---	(2)	4.0	4.8	5.6	(2)	(2)	(2)	(2)	(2)	(2)	(2)
Glacial Clay													
Firm silty glacial clay	11	7 - 15	2.8	2.4	2.8	3.2	2.8	3.2	3.6	2.0	2.4	2.4	3.2
Firm clay (gumbotil)	12	9 - 15	2.8	2.4	2.8	3.2	2.8	3.2	3.6	2.0	2.4	2.4	3.2
Firm glacial clay(1)	11	7 - 15	2.4 [3.2]	2.8 [3.2]	3.2 [4.0]	3.6 [4.4]	3.2 [4.0]	3.6 [4.4]	4.0 [4.8]	2.0 [2.4]	2.4 [2.8]	2.8 [3.2]	3.6 [4.4]
Firm sandy glacial clay(1)	13	9 - 15	2.4 [3.2]	2.8 [3.2]	3.2 [4.0]	3.6 [4.4]	3.2 [4.0]	3.6 [4.4]	4.0 [4.8]	2.0 [2.4]	2.4 [2.8]	2.8 [3.2]	3.6 [4.4]
Firm - very firm glacial clay(1)	14	11 - 17	2.8 [3.6]	2.8 [4.0]	3.2 [4.8]	3.6 [5.6]	4.0 [4.8]	4.4 [5.2]	4.8 [5.6]	2.4 [3.2]	2.8 [3.6]	3.2 [4.0]	4.0 [5.2]
Very firm glacial clay(1)	24	17 - 30	2.8 [3.6]	2.8 [4.0]	3.2 [4.8]	3.6 [5.6]	3.2 (3) [4.8]	3.6 (3) [5.6]	4.4 (3) [6.4]	2.4 [3.2]	2.8 [3.6]	3.2 [4.0]	4.0 [5.2]
Very firm sandy glacial clay(1)	25	15 - 30	3.2 [4.0]	2.8 [4.0]	3.2 [4.8]	3.6 [5.6]	3.2 (3) [4.8]	3.6 (3) [5.6]	4.4 (3) [6.4]	2.4 [3.2]	2.8 [3.6]	3.2 [4.0]	4.0 [5.2]
Cohesive or glacial material(1)	> 35	---	(2)	2.8 [4.0]	3.2 [4.8]	3.6 [5.6]	(2)	(2)	(2)	2.0 (4) [3.2]	2.4 (4) [4.0]	2.8 (4) [4.4]	3.6 (4) [5.6]

Table notes:

(1) **For double entries the upper value is for an embedded pile within 30 feet of the natural ground elevation, and the lower value [ ] is for pile depths more than 30 feet below the natural ground elevation.**

(2) Do not consider use of this pile type for this soil condition, wood with N > 25, prestressed concrete with N > 35, or steel pipe with N > 40.

(3) Prestressed concrete piles have proven to be difficult to drive in these soils. Prestressed piles should not be driven in glacial clay with consistent N > 30 to 35.

(4) Steel pipe piles should not be driven in soils with consistent N > 40.

Gener-alized Soil Category	Soil Classification Method AASHTO	Soil Classification Method USDA Textural	Soil Classification Method BDM 6.2.7 Geotechnical Resistance Charts
Cohesive A-4, A-5, A-6 and A-7 Clay Silty clay	Silty clay loam Silt Clay loam	Silt loam Loam Sandy clay	Loess Very soft silty clay
			Loess Soft silty clay
			Loess Stiff silty clay
			Loess Firm silty clay
			Loess Stiff silt
			Loess Stiff sandy clay
			Glacial Clay Firm silty glacial clay
			Glacial Clay Firm clay (gumbotil)
			Glacial Clay Firm glacial clay
			Glacial Clay Firm sandy glacial clay
			Glacial Clay Firm-very firm glacial clay
			Glacial Clay Very firm glacial clay
			Glacial Clay Very firm sandy glacial clay
			Glacial Clay Cohesive or glacial material
Non-Cohesive	A-1, A-2 and A-3	Sandy clay loam Sandy loam Loamy sand Sand	Alluvium Or Loess Stiff sandy silt
			Alluvium Or Loess Silty sand
			Alluvium Or Loess Clayey sand
			Alluvium Or Loess Fine sand
			Alluvium Or Loess Coarse sand
			Alluvium Or Loess

			Gravely sand
			Alluvium Or Loess Granular material (N>40)

Track 1, Example 1-soil classification table [BDM Table 6.2.8]

Step 5 - Select resistance factor to estimate pile length based on the soil profile and construction control

In this step the final design engineer first characterizes the site as cohesive, mixed, or non-cohesive based on soil classification in the table and the soil profile.

Abbreviations:

- AASHTO, American Association of State Highway and Transportation Officials
- USDA, U.S. Department of Agriculture

Only the 9-foot Layer 2 of silty sand is classified as non-cohesive. The remainder of the profile is classified as cohesive, and most likely will represent more than 70% of the pile embedment length. Thus the soil is expected to fit the cohesive classification, and the resistance factor selection from the three available choices below is 0.65 [BDM Table 6.2.9-1].

φ = **0.65 for cohesive** soil, averaged over the full depth of estimated pile penetration
φ = **0.65 for mixed** soil, averaged over the full depth of estimated pile penetration
φ = **0.55 for non-cohesive** soil, averaged over the full depth of estimated pile penetration

Step 6 - Calculate required nominal pile resistance, R_n
The required nominal pile resistance is:

$$R_n = (\sum [\eta\gamma Q + \gamma_DD\ DD])/\varphi = (128 + 0)/0.65 = 197 \text{ kips/pile}$$

where

$\sum \eta\gamma Q = \gamma Q = 128$ kips (Step 3)

$\gamma_{DD} DD = 0$ (no downdrag)

$\varphi = 0.65$ (Step 5)

Step 7 – Estimate contract pile length, L
Based on the nominal resistance values in Step 4, the cumulative nominal geotechnical resistance, $R_{n\text{-}BB}$, per pile is calculated as follows, where D = depth in feet below the bottom of footing.

$D_0 = 0$ ft, $R_{n\text{-}BB0} = 0$
$D_1 = 6$ ft, $R_{n\text{-}BB1} = R_{n\text{-}BB0} + (0.8 \text{ kips/ft})(6 \text{ ft}) = 4.8$ kips
$D_2 = 6 + 9 = 15$ ft, $R_{n\text{-}BB2} = R_{n\text{-}BB1} + (1.2 \text{ kips/ft})(9 \text{ ft}) = 4.8 + 10.8 = 15.6$ kips
$D_3 = 15 + 8 = 23$ ft, $R_{n\text{-}BB3} = R_{n\text{-}BB2} + (2.8 \text{ kips/ft})(8 \text{ ft}) = 15.6 + 22.4 = 38.0$ kips
$D_4 = 23 + 65 = 88$ ft, $R_{n\text{-}BB4} = R_{n\text{-}BB3} + (3.2 \text{ kips/ft})(65 \text{ ft}) = 38.0 + 208.0 = 246.0$ kips

A graphic presentation of the estimated nominal geotechnical resistance per pile versus depth is presented below.

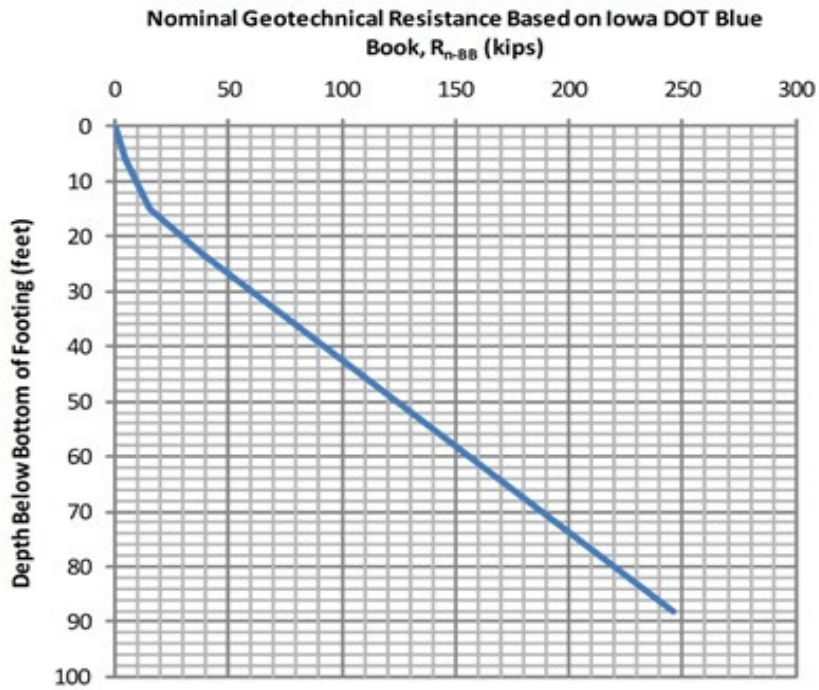

Track 1, Example 1-a plot of nominal geotechnical resistance versus depth

From the graph the depth below the footing necessary to achieve 197 kips is about 73 feet and may be computed as follows:

$D_L = 23 + (197\text{-}38.0)/3.2 = 72.7$ feet

The contract pile length includes a 2-foot embedment in the footing [BDM Table 6.2.5] and a 1-foot allowance for cutoff due to driving damage [BDM 6.2.4.2].

$L = 72.7 + 2 + 1 = 75.7$ feet

The length for steel H-piles is specified in 5-foot increments [BDM 6.2.4.2]. Therefore, the contract pile length is 75 feet, with 72 feet embedded.

At this point the embedded pile length is known, and it is necessary to check the resistance factor.

% cohesive soil = [(72-9)/72] (100) = 88% > 70%

Therefore, the resistance factor for cohesive soil is the correct choice. If the resistance factor were incorrect the engineer would need to repeat Steps 6 and 7 (although in this example the mixed soil classification would not result in numerical changes).

Step 8 - Estimate target nominal pile driving resistance, $R_{ndr\text{-}T}$

For a driven H-pile with no planned retap and use of a WEAP analysis for construction control, the following resistance factors, φ, are recommended to estimate the target nominal pile driving resistance [BDM Table 6.2.9-3].

> **φ_{EOD} = 0.65 for cohesive soil,** averaged over the full depth of estimated pile penetration
> **φ_{SETUP} = 0.20 for cohesive soil,** averaged over the full depth of estimated pile penetration
> **φ = 0.65 for mixed soil,** averaged over the full depth of estimated pile penetration
> **φ = 0.55 for non-cohesive soil,** averaged over the full depth of estimated pile penetration

The nominal pile resistance during construction, R_n, will be determined at end of drive by scaling back 7-day setup gain, and then adjusting retaps to account for setup.

$\Sigma\eta\gamma Q + \gamma_{DD}DD \leq \varphi R_n$ where η = load modifier = 1.0 from BDM 6.2.3.1

Let $R_n = R_T$ = nominal pile resistance at time T (days) after EOD.

$$R_EOD \geq (\sum [\eta\gamma Q + \gamma_DD\ DD])/(\varphi_EOD + \varphi_SETUP\ (F_SETUP - 1))$$

where

$\sum \eta\gamma Q = \gamma Q$ = 128 kips, (Step 2)

$\gamma_{DD}DD = 0$ (no downdrag)

F_{SETUP} = Setup Ratio = R_T/R_{EOD}

To determine the setup ratio the soil profile was used to calculate the average SPT N-value for the <u>cohesive</u> soil layers penetrated by the driven pile over the contract pile length, as follows.

Calculated average SPT N-value = [(6′)(4) + (8′)(11) + (72′-23′)(12)]/(72′-9′) = 11

The average SPT N-value of 11 yields a Setup Ratio, F_{SETUP}, of 1.47 for 1-day retap, 1.55 for 3-day retap and 1.61 for 7-day retap from the graph shown below [BDM Figure 6.2.10].

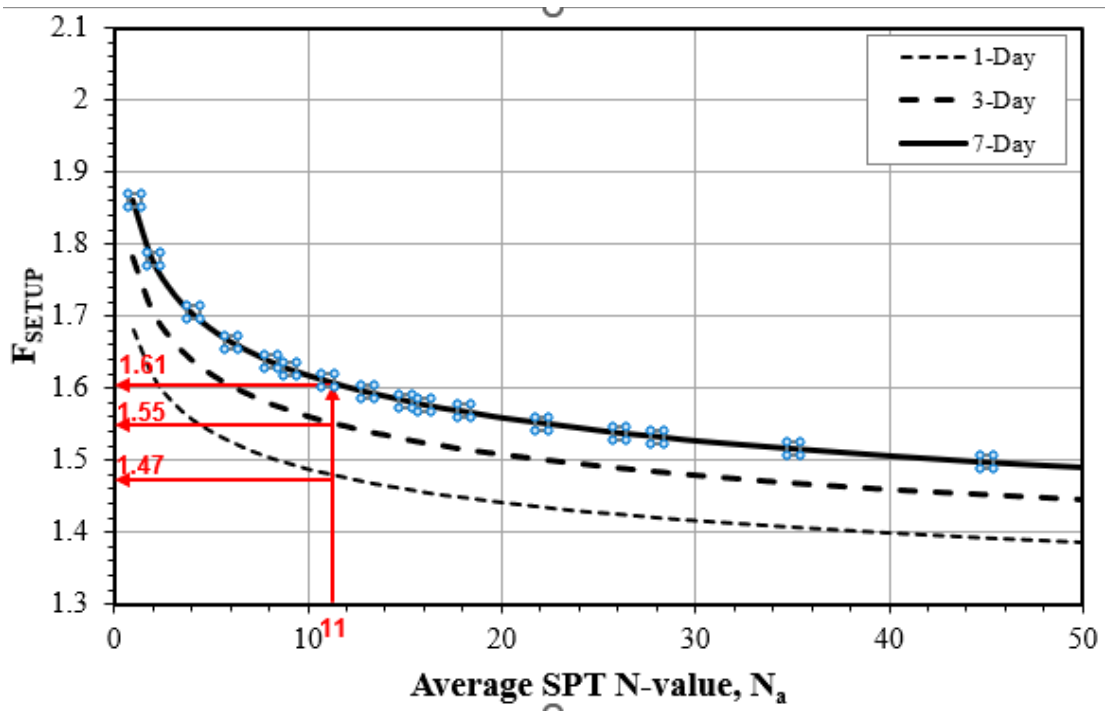

Track 1, Example 1-pile setup factor chart [BDM Figure 6.2.10]

Let φ_{TAR} = Resistance factor for target nominal resistance ≤ 1.00

$= \varphi_EOD + \varphi_SETUP\ (F_SETUP - 1),$

and $R_{ndr\text{-}T} = R_{EOD}$

The target pile driving resistance at end of drive is

$$R_(ndr - T) = R_EOD$$

$$\geq (\sum [\![\eta\gamma Q + \gamma_DD\ DD]\!])/\varphi_TAR$$

$$\geq (\sum [\![\eta\gamma Q + \gamma_DD\ DD]\!])/(\varphi_EOD + \varphi_SETUP\ (F_SETUP - 1)\ )$$

$$\geq (128 + 0)/((0.65) + (0.20)(1.61 - 1)\ ) = 128/0.77$$

Note that $\varphi_{TAR} < 1.00$, OK

= 166 kips = 83 tons

The target nominal geotechnical resistance at 1-day retap then is:

$R_{1\text{-day}}$ = (166.0)(1.47) = 244 kips = 122 tons, but not more than R_(ndr – T) computed with φ_{EOD} , not considering setup.

$R_{1\text{-day}} \leq$ (128 + 0)/0.65 = 197 kips = 99 tons

The 99 tons controls and also will control 3-day and 7-day retaps (which otherwise would be 129 tons and 134 tons, respectively).

Step 9 – Prepare CADD notes for the bridge plans
At this point the final design engineer selects the appropriate CADD notes for the abutment and pier plan sheets and adds the specific pile load values to the notes [BDM 13.8.2].

E818: Abutment piles, LRFD contract length and resistance

THE CONTRACT LENGTH OF 75 FEET FOR THE WEST ABUTMENT PILES IS BASED ON A COHESIVE SOIL CLASSIFICATION, A TOTAL FACTORED AXIAL LOAD PER PILE (P_U) OF 128 KIPS, AND A GEOTECHNICAL RESISTANCE FACTOR (PHI) OF 0.65.

THE NOMINAL AXIAL BEARING RESISTANCE FOR CONSTRUCTION CONTROL WAS DETERMINED FROM A COHESIVE SOIL CLASSIFICATION AND A GEOTECHNICAL RESISTANCE FACTOR (PHI) OF 0.77. PILES ARE ASSUMED TO BE DRIVEN FROM A START ELEVATION AT THE BOTTOM OF FOOTING.

E819: Abutment piles, driving and construction control

THE REQUIRED NOMINAL AXIAL BEARING RESISTANCE FOR WEST ABUTMENT PILES IS 83 TONS AT END OF DRIVE. IF RETAPS ARE NECESSARY TO ACHIEVE BEARING, THE REQUIRED NOMINAL AXIAL BEARING RESISTANCE IS 99 TONS AT ONE-DAY OR LATER RETAPS. THE PILE CONTRACT LENGTH SHALL BE DRIVEN AS PER PLAN UNLESS PILES REACH REFUSAL. CONSTRUCTION CONTROL REQUIRES A WEAP ANALYSIS WITH BEARING GRAPH.

Step 10 – Check the design
Within the Bridges and Structures Bureau at the Iowa DOT a final design engineer other than the bridge designer is assigned to give the bridge design an independent check at the time final plans are complete. During the checking process a final design engineer will review the soils package to ensure that all recommendations were followed and also will check structural, geotechnical, and drivability aspects of the design.

Other design organizations may perform checks at various stages of design rather than upon plan completion.

END DESIGN PHASE

BEGIN CONSTRUCTION PHASE

Step 11 – Request and check contractor's hammer data, and prepare bearing graph for WEAP control

After the bridge contract is let and prior to start of pile driving, the contractor completes Hammer Data sheets for the pile driving hammer that he/she plans to use. The Hammer Data sheets include all pertinent information including the cap (helmet) number and hammer identification information with details, hammer cushion, and pile cushion (where required), as well as pile size, pile length, and estimated pile driving resistance. The Construction and Materials Bureau uses the data received to complete a WEAP analysis for construction control during pile driving. Results from the WEAP analysis are then used to prepare an LRFD Bearing Graph (without the factor of safety used for allowable stress design). The Bearing Graph includes curves of nominal driving resistance versus blows per foot, and identifies specific driving conditions, where driving stress is a concern. The figure below is the LRFD Bearing Graph for the west abutment.

Special Driving Conditions	Stroke (ft)	Monitor at 10 Blow Increments	Do NOT Exceed	Project No:	Design Example DGT11	Graph No:	XX-XXXX-XX-XXX
				Design No:	XXX	Hammer No:	XXXXXX
	7	-----	-----	County:	XXXXX	Cap No:	XXX
	8	-----	-----	Location:	West Abutment	Pile Type:	HP 10x57
Blows per foot	9	-----	-----	Hammer:	Delmag D19-42	Pile Length:	75 feet

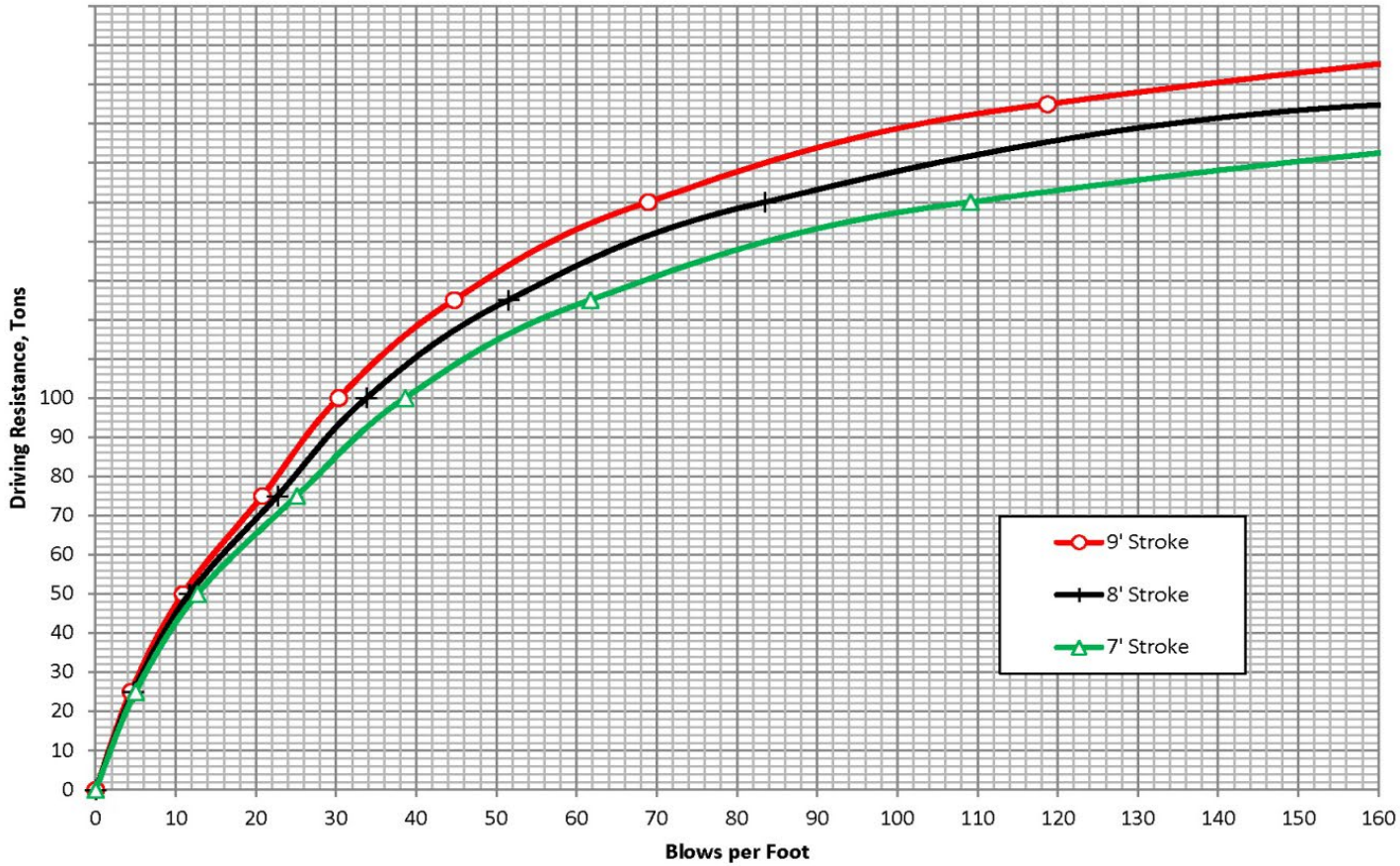

Track 1, Example 1-general WEAP bearing graph

Step 12 - Observe construction, record driven resistance, and resolve any construction issues

During pile driving, the construction inspector records the hammer stroke and number of blows to advance the pile an equivalent penetration of 1 foot, and then converts the recorded information with the Bearing Graph to record the driven resistance per pile at EOD. This information is shown for this example in the English Log of Piling Driven with Wave Equation below.

If the recorded pile driving resistance at EOD is less than the target pile nominal driving resistance, then the pile is retapped about 24 hours after EOD. (The retap is a remedial measure that makes use of setup for an individual pile. If the 24-hour retap does not indicate enough driven resistance, an extension will be added. An extension is expensive, and the designer should not overestimate the benefit of setup.)

For example, at EOD for the planned pile embedment length at Pile 1, the construction inspector recorded a hammer stroke of 7-1/2 feet and a blow count of 30 blows per foot for the last foot of pile penetration, as shown on the log below. Based on the Bearing Graph the construction inspector recorded a driving resistance of 88 tons, which is greater than the target driving resistance of 83 tons.

Pile 4 illustrates the use of pile retaps. At EOD at Pile 4, the construction inspector recorded a driving resistance of 69 tons, which is less than the target nominal pile driving resistance of 83 tons. Twenty-four hours after EOD, Pile 4 was retapped, with a retap target nominal driving resistance of 99 tons. The pile driving hammer was warmed up with 20 blows on another pile; and after two blows on Pile 4 to set the cap, Pile 4 was retapped 10 blows with a measured driven penetration distance of 3-1/2 inches ($10 \times 12/3.5 = 34$ blows per foot) at a stroke of 8-1/2 feet. The Pile 4 retap resulted in a retap driving resistance of 100 tons (or 103 tons depending on reading of the graph), which is greater than the retap target driving resistance of 99 tons. The driving log shows that all other piles reached the target resistance at contract length and EOD with relatively little variation.

If the production pile could not reach the target nominal pile driving resistance of 99 tons at the retap event, the production pile could be spliced with an extension pile, and redriving could be continued to avoid any delay in construction. At this point, the pile setup resistance initially developed is assumed none. The pile can be extended until the new field-measured pile driving resistance reaches the target nominal driving resistance at EOD of 83 tons estimated in Step 8 and described in the CADD note.

Form 630209(E) 9/06

Iowa Department of Transportation

ENGLISH LOG OF PILING DRIVEN WITH WAVE EQUATION

Project No. Someplace in Iowa
County XXX
Design No. 389
Contractor XXXX
Driving Graph No. XX-XXXX-XX-XXX
Nominal Driving Resistance 83 Tons

Pile (Type and Size) HP 10x57 (Wood, Steel or Concrete)
Hammer (Type & Model) Delmag D19-42 (Gravity or Diesel manufacturer and model)
Foundation Description West Abutment (North abut, Pier 1, etc.)
Station of Foundation C.L. 447+00

Sketch foundation below, number each pile and show steel H-pile orientation as installed. Note battered piles on sketch,and give the amount of batter. Place name and certificate number of welder below if welding was necessary. Forward copies, including driving graph, as outlined in the construction manual. Note on drawing which pile has been logged.

Batter Piling _____ in the direction shown.

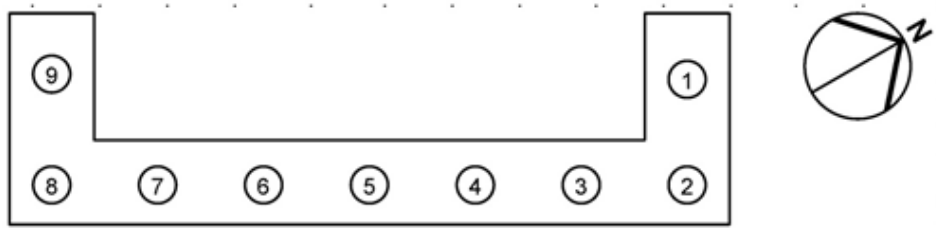

Pile No.	Date Driven	(1) Plan Length (ft.)	Length Cutoff (0.0 ft.)	Blows Per Foot	Ram Rise (ft.)	Driven Resistance (Tons)	RETAP (2) Date	RETAP Ram Rise (ft.)	RETAP Blows Per Foot	RETAP Driven Resistance (Tons)	PILE EXTENSIONS (3) Length Added (0.0 ft.)	PILE EXTENSIONS Length Cutoff (0.0 ft.)	PILE EXTENSIONS Ram Rise (ft.)	PILE EXTENSIONS Blows Per Foot	PILE EXTENSIONS Driven Resistance (Tons)	Welds (Count)
1	X-XX-XX	75	1.5	30	7.5	88										
2	X-XX-XX	75	4.5	32	8	96										
3	X-XX-XX	75	2.5	31	7	87										
4	X-XX-XX	75	1.0	20	8	69	X-XX-XX	8.5	34	100						
5	X-XX-XX	75	2.0	28	9	94										
6	X-XX-XX	75	2.0	26	8.5	86										
7	X-XX-XX	75	2.5	30	7.5	89										
8	X-XX-XX	75	4.0	35	7	94										
9	X-XX-XX	75	2.0	28	8.5	90										
---	---	---	---	---	---	---										

Total Welds: _____

(1) Record in the Remarks section below if the pile length is anything other than the plan length at the beginning of drive.
(2) Indicate date of retap in date column (1 day delay min.). List only pile actually checked.
(3) Additional pile length to be authorized by Construction Office.

Plan Length: _____ Feet
Extensions: _____ Feet
Total: _____ Feet

Welders Name: _____ Lab No.: _____ Exp. Date: _____

Remarks: _____

Inspector _____ Date _____ Project Engineer _____

Distribution: Construction (original), District, Project File

Track 1, Example 1-pile driving log

Track 1, Example 2

Driven H-Pile in Mixed Soil with Scour, and Construction Control Based on Wave Equation and No Planned Retap

General design and construction steps to be modified for project conditions

Design Steps

Step 1	Develop bridge situation plan (or TS&L, Type, Size, and Location). (1)
Step 2	Develop soils package, including soil borings and foundation recommendations. (1)
Step 3	Determine pile layout, pile loads including downdrag, and other design requirements. (1) This step includes structural checks.
Step 4	Estimate nominal geotechnical resistance for friction and end bearing.
Step 5	Select resistance factor(s) to estimate pile length based on the soil profile and construction control.
Step 6	Calculate required nominal pile resistance, R_n .
Step 7	Estimate contract pile length, L, considering downdrag, scour, pile uplift, lateral loading, and unbraced length, if applicable.
Step 8	Estimate target nominal pile driving resistance, $R_{ndr\text{-}T}$.
Step 9	Prepare CADD notes for bridge plans.
Step 10	Check the design. (2)

Construction Steps

Step 11	Request and check contractor's hammer data, and prepare bearing graph for WEAP control or other necessary items for alternate methods of construction control.
Step 12	Observe construction, record driven resistance, and resolve any construction issues.

(1) These steps determine the basic information for geotechnical pile design and will vary depending on bridge project and Bureau practice.

(2) Checking will vary depending on bridge project and Bureau practice.

Within the Bridges and Structures Bureau at the Iowa DOT, the design steps that determine the basic information necessary for design of a steel H-pile generally follow as indicated in Steps 1-3. The steps involve communication among the preliminary design engineer, soils design engineer, and final design engineer. In other organizations the basic information may be determined differently, but that process generally should not affect the overall design of the pile.

Step 1 - Develop bridge situation plan (or TS&L, Type, Size, and Location)

For a typical bridge the preliminary design engineer plots topographical information, locates the bridge, determines general type of superstructure, location of substructure units, elevations of foundations, hydraulic information (if needed), and other basic information to characterize the bridge. The preliminary design engineer then prepares a TS&L sheet that shows a plan and longitudinal section of the bridge.

For this example for a state project, the TS&L gives the following information needed for design of T-pier piles:

- 208-foot three span, prestressed concrete beam superstructure
- Zero skew

- T-piers
- Pile foundation
- Bottom of pier footing elevation 435 feet
- Design scour elevation of 425 feet and check scour elevation of 424 feet (This indicates 10 feet of scour to be considered at the strength limit state and 11 feet of scour to be considered at the extreme event limit state.)

Step 2 - Develop soils package, including soil borings and foundation recommendations
Based on location of the bridge abutments and piers the soils design engineer orders soil borings, typically at least one per substructure unit. When the engineer receives the boring logs he/she arranges for them to be plotted on a longitudinal section, checks any special geotechnical conditions on the site, and writes a recommendation for foundation type with any applicable special geotechnical design considerations.

For this example, the recommendations are the following:

- Friction piles with end bearing that tip out in the very firm glacial clay layer
- Steel H-piles for the T-piers
- Structural Resistance Level – 1 (which does not require a driving analysis by the Construction and Materials Bureau during design) [BDM 6.2.6.1]
- No downdrag
- Normal driving resistance (This will lead to $\varphi_c = 0.6$ for the structural check.)
- No special site considerations for stability, settlement, or lateral movement (Therefore a Service I load will not be required for design.)
- Standard construction control based on WEAP analysis with no planned retap

Subsurface conditions at Pier #1 have been characterized based on a representative test boring, as indicated in the soil profile on the next page. Below the bottom of footing elevation, subsurface conditions generally consist of three layers: about 33 feet of silty sand, 13 feet of firm silty clay, and deeper very firm glacial clay. The test boring was terminated at a depth of 95 feet below the existing ground surface, and ground water was encountered at Elevation 439.

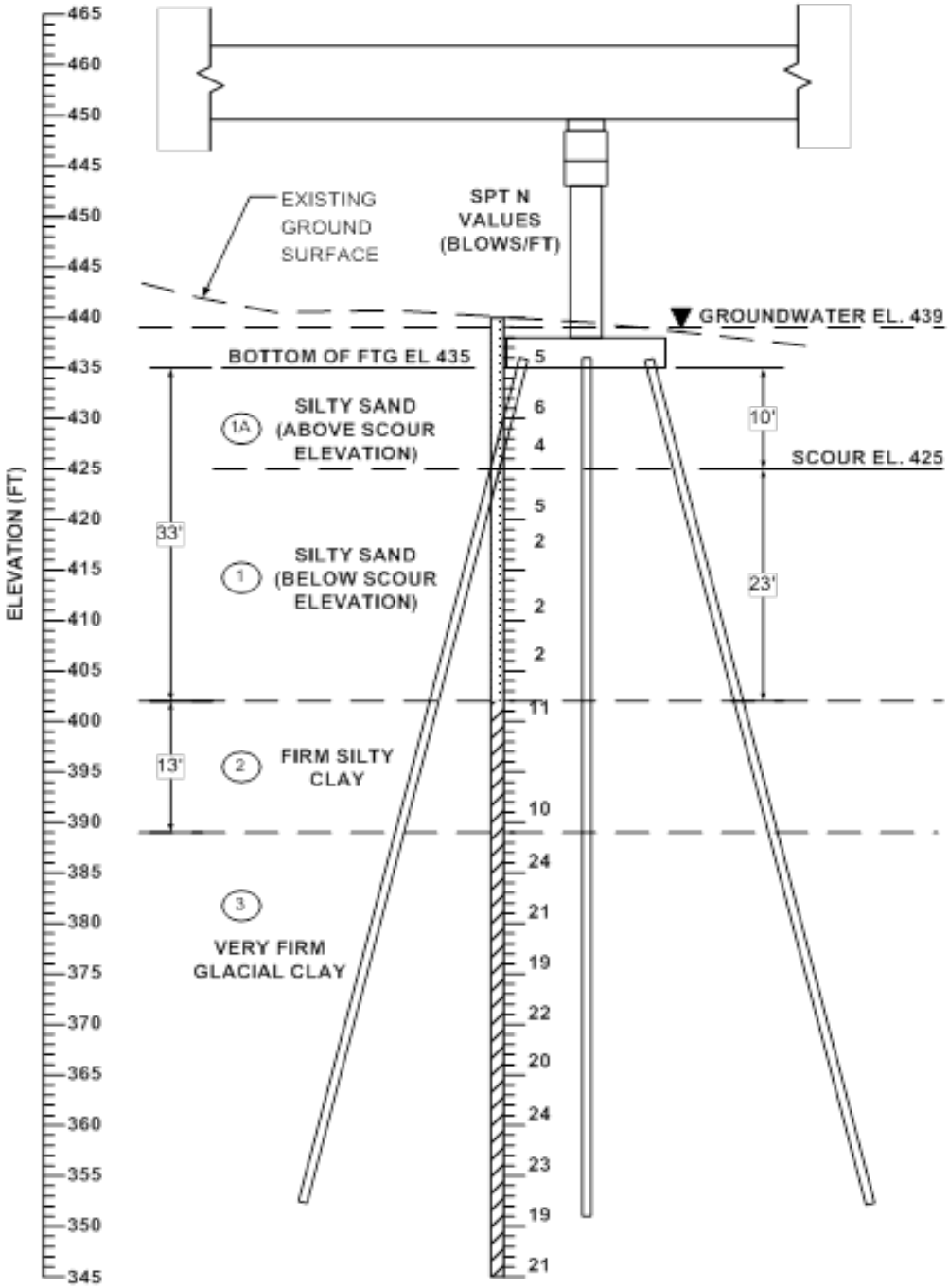

Track 1, Example 2-soil profile at Pier #1

Step 3 - Determine pile layout, pile loads, and other design requirements. This step includes structural checks.

The final design engineer begins design of the pier piles with the TS&L and the soils design package. Because the bridge has a prestressed concrete beam superstructure and integral abutments the engineer selects HP 10×57 piles for Pier #1 to match abutment piles, following Bridge Design Manual policy [BDM 6.5.1.1.1 and 6.2.1.1].

Based on RCPIER analysis at the strength limit state and Bridge Design Manual policy for pile

spacing and number of piles [BDM 6.5.4.1.1], the final design engineer determines the following:

- Eighteen Grade 50, HP 10×57 piles at 4′-6 spacing, arranged in three rows of six as shown below
- Perimeter piles battered at 1:4, as indicated by the arrows shown below
- Maximum factored, axial Strength I load for one pile = 143 kips
- Maximum factored, lateral Strength III load for one pile = 5 kips
- No uplift

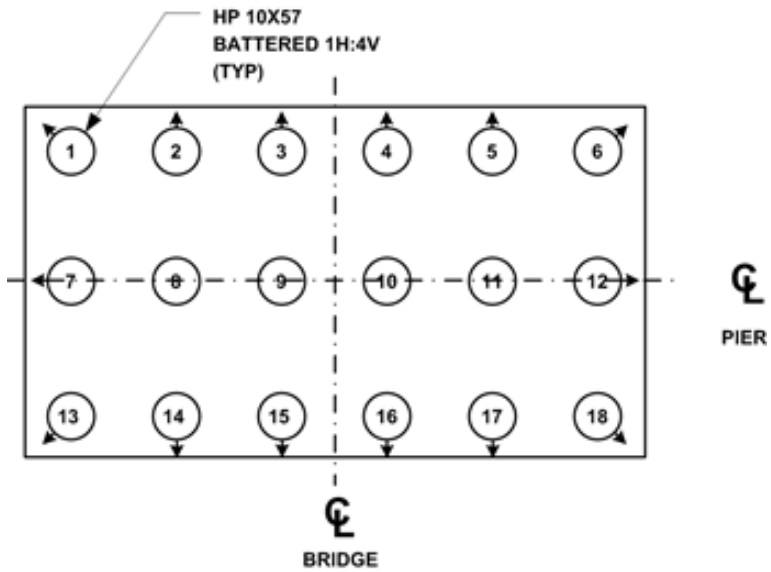

Track 1, Example 2-pile layout at Pier #1

Notation: The same loads are designated in Step 3 with "P" and in Steps 6 and 8 with "Q".

First, check Structural Resistance Level – 1 (SRL-1) recommended by the soils engineer [BDM Table 6.2.6.1-1].

For a HP 10x57, P_n = 243 kips

The soils package indicates normal driving resistance, therefore

$\varphi_c = 0.60$

Then

$\varphi_c P_n = (0.60)(243) = 146$ kips > [P_u = 143 kips] OK

(The second and third checks below are for illustration. They could be condensed to a simple check of the pile unsupported height against the appropriate value in BDM Table 6.6.4.1.3.1-2 as follows.

[10 + 4 = 14 feet < 16.0 feet OK)

Second, check the slenderness ratio of a pile under design scour [BDM 6.6.4.1.3.1]. A pile is assumed to be supported at the bottom of the footing and at 4 feet below the scour elevation, and K may be taken as 1.0. For design scour and SRL-1 the maximum slenderness ratio is 80 [BDM

Table 6.6.4.1.3.1-1]. For a HP 10x57, r_y = 2.45 inches.

$KL/r = (1.0)(10+4)(12)/2.45 = 68.6 < 80$ OK

Third, check the pile axial resistance considering the unsupported length after design scour and using the AASHTO LRFD Specifications.

$\varphi_c = 0.90$ [AASHTO-LRFD 6.5.4.2]

$P_o = QF_yA_g = (1.0)(50)(16.7) = 835$ kips [AASHTO-LRFD 6.9.4.1.1]

Note that the area of the HP 10x57 shape was reduced to 16.7 in^2 in the 14th Edition of *Steel Construction Manual.*

Where Q = slender element reduction factor, in this case for an HP 10x57 = 1.0. For some H-pile sections Q may be a reduction factor.

$KL/r_s = 68.6$ [AASHTO-LRFD 6.9.4.1.2]

$P_e = \pi^2EA_g/(KL/r_s)^2 = 1016$ kips [AASHTO-LRFD 6.9.4.1.2]

Torsional buckling does not apply because $K_zL_z = K_yL_y$ [AASHTO-LRFD Table 6.9.4.1.1-1].

$P_e/P_o = 1016/835 = 1.22$ [AASHTO-LRFD 6.9.4.1.1]

$P_n = [0.658^{(Po/Pe)}]P_o = 592$ kips [AASHTO-LRFD 6.9.4.1.1]

$\varphi_cP_n = (0.90)(592) = 533$ kips $>$ [P_u = 143 kips] OK

By inspection, the slenderness ratio after check scour and pile axial resistance will be acceptable at the Extreme Event II limit state.

The lateral load for a pile is within the limit set in BDM Table 6.2.6.1-2, and no further lateral analysis is required.

$V_u = 5$ kips $<$ [$\varphi_vV_n = (1.00)(18) = 18$ kips] OK

(The service limit state, not illustrated in this example, may control because of the traditional Bridges and Structures Bureau limit of 6 kips [BDM Table 6.2.6.1-2] combined with lateral loads in Service I and the 1.0 load factor on temperature. Lateral deflections and rotations also may need to be checked in some cases.)

These computations need to be modified for non-typical conditions such as absence of battered piles, significant water or ice loads, and very soft soils immediately below scour elevations.

Step 4 - Estimate nominal friction and end bearing geotechnical resistance

Based on the Pier #1 soil boring and BDM Tables 6.2.7-1 and 6.2.7-2, the final design engineer estimates the following nominal resistances for friction and end bearing as shown in the table below.

Track 1, Example 2-estimated nominal geotechnical resistance

Soil Stratum	Soil Description	Stratum Thickness (ft)	Average SPT N Value (blows/ft)	Estimated Nominal Resistance for Friction Pile (kips/ft)	Cumulative Nominal Friction Resistance at Bottom of Layer (1) (kips)	Estimated Nominal Resistance for End Bearing (ksi)
1A	Silty Sand above Scour Elevation	10	5	1.2	12	---
1	Silty Sand below Scour Elevation	23	3	1.2	40	---
2	Firm Silty Clay	13	10	2.0	66	---
3	Very Firm Glacial Clay (more than 30 feet below the natural ground elevation)	44	21	4.0	242	---
3	Very Firm Glacial Clay	---	21(2)	---	---	1

(1) This information is used to prepare the calculations in Step 7.
(2) The SPT N value for Layer 3 is near the lower limit for use of end bearing.

Step 5 - Select resistance factor to estimate pile length based on the soil profile and construction control

By inspection, more than 30 percent and less than 70 percent of the embedded pile length will be in non-cohesive soil, and hence the soil over the pile embedment length is generalized as a mixed soil.

For driven H-pile with construction control based on a WEAP analysis at EOD and no planned retap, the following resistance factor is recommended to estimate the contract pile length for mixed soil [BDM Table 6.2.9-1].

φ = **0.65 for mixed** soil, averaged over the full depth of estimated pile penetration

Step 6 - Calculate the required nominal pile resistance, R_n

The required nominal pile resistance can be calculated as:

$$R_n = (\sum [\eta\gamma Q + \gamma_DD\ DD])/\varphi = (143 + 0)/0.65 = 220 \text{ kips/pile}$$

where

$\sum \eta\gamma Q = \gamma Q = 143$ kips (Step 3)

$\gamma_{DD} DD = 0$ (no downdrag)

$\varphi = 0.65$ (Step 5)

Step 7 – Estimate contract pile length, L, considering scour

Based on the nominal resistance values in Step 4, the cumulative nominal geotechnical resistance, $R_{n\text{-}BB}$, per pile is calculated as follows, where D = depth in feet below the bottom of footing.

$D_0 = 0$ ft, $R_{n\text{-}BB0} = 0$ kips
$D_1 = 10$ ft, $R_{n\text{-}BB1} = R_{n\text{-}BB0} + 0 = 0$ kips because scour zone provides no support
$D_2 = 10 + 23 = 33$ ft, $R_{n\text{-}BB2} = R_{n\text{-}BB1} + (1.2 \text{ kips/ft})(23 \text{ ft}) = 0 + 27.6 = 27.6$ kips
$D_3 = 33 + 13 = 46$ ft, $R_{n\text{-}BB3} = R_{n\text{-}BB2} + (2.0 \text{ kips/ft})(13 \text{ ft}) = 27.6 + 26.0 = 53.6$ kips
End bearing in Layer 3 = (1 ksi)(16.8 in^2) = 16.8 kips, $R_{n\text{-}BB4} = R_{n\text{-}BB3} + 16.8 = 70.4$ kips
Required additional length in Layer 3 = (220 – 70.4)/4.0 = 37 feet
$D_4 = 46 + 37 = 83$ ft,
$R_{n\text{-}BB5} = R_{n\text{-}BB4} + (4.0 \text{ kips/ft})(37 \text{ ft}) = 70.4 + 148.0 = 218.4 \text{ kips} \approx 220$ kips

The contract pile length includes a 1-foot embedment in the footing [BDM Table 6.2.5] and a 1-foot allowance for cutoff due to driving damage [BDM 6.2.4.2].

L = 83 + 1 + 1 = 85 feet

The length for steel H-piles is specified in 5-foot increments [BDM 6.2.4.2]. Since the contract pile length is already at an even 5-foot increment, the contract pile length does not need to be rounded to the nearest 5-foot increment.

At this point the embedded pile length is known, and it is necessary to check the site classification for the resistance factor.

% non-cohesive soil below scour elevation = [23/(83-10)](100) =

31.5% > 30% and < 70%

Therefore, the resistance factor for mixed soil is the correct choice.

Step 8 - Estimate target nominal pile driving resistance, $R_{ndr\text{-}T}$

The complete embedment length below the bottom of footing will contribute to pile driving resistance, i.e., the soil resistance above scour elevation which was ignored in Step 4 should be considered in pile driving resistance, $R_{ndr\text{-}T}$.

The complete pile embedment length is 83 feet, which is equal to the 85-foot contract pile length minus the 1 foot of embedment length in the concrete footing and the 1 foot cutoff.

The H-pile will penetrate 33 feet of non-cohesive soil below the bottom of footing.

% non-cohesive soil = [33/83] (100) = 40% > 30%

Therefore, the generalized soil category for pile driving (construction stage) is also "mixed". It should be noted that it is possible for piles for a substructure to have different soil categories

during the design stage and during construction stage.

For driven H-pile with WEAP analysis construction control and no planned retap, the following resistance factor, φ_{TAR}, is recommended to estimate the target pile driving resistance at end of drive (EOD) for mixed soil [BDM Table 6.2.9-3].

> **φ_{TAR} = 0.65 for mixed soil,** averaged over the full depth of estimated pile penetration
>
> $R_SCOUR = (1.2\ \text{kip/ft})(10\ \text{ft}) = 12\ \text{kips}$
>
> $R_(ndr - T) = (\sum [\eta\gamma Q + \gamma_DD\ DD])/\varphi_TAR + R_SCOUR$
>
> $= (143 + 0)/0.65 + 12$
>
> = 220 + 12 = 232 kips/pile = 116 tons/pile

Step 9 – Prepare CADD notes for the bridge plans
At this point the final design engineer selects the appropriate CADD notes and adds the specific pile load values to the notes [BDM 13.8.2].

E718: Pier piles, LRFD contract length and resistance

> THE CONTRACT LENGTH OF 85 FEET FOR THE PIER #1 PILES IS BASED ON A MIXED SOIL CLASSIFICATION, A TOTAL FACTORED AXIAL LOAD PER PILE (P_U) OF 143 KIPS, AND A GEOTECHNICAL RESISTANCE FACTOR (PHI) OF 0.65 FOR SOIL.
>
> THE NOMINAL AXIAL BEARING RESISTANCE FOR CONSTRUCTION CONTROL WAS DETERMINED FROM A MIXED SOIL CLASSIFICATION AND A GEOTECHNICAL RESISTANCE FACTOR (PHI) OF 0.65 FOR SOIL. PILES ARE ASSUMED TO BE DRIVEN FROM A START ELEVATION AT THE BOTTOM OF FOOTING. DESIGN SCOUR (200-YEAR) WAS ASSUMED TO AFFECT THE UPPER 10 FEET OF EMBEDDED PILE LENGTH AND CAUSE 12 KIPS OF DRIVING RESISTANCE.

E719: Pier piles, LRFD driving and construction control

> THE REQUIRED NOMINAL AXIAL BEARING RESISTANCE FOR PIER #1 PILES IS 116 TONS AT END OF DRIVE OR RETAP. THE PILE CONTRACT LENGTH SHALL BE DRIVEN AS PER PLAN UNLESS PILES REACH REFUSAL. CONSTRUCTION CONTROL REQUIRES A WEAP ANALYSIS AND BEARING GRAPH.

Note that a statement about retaps was included in the driving note, since the piling will be driven in a mixed soil classification. Setup gain is ignored for mixed soil.

Step 10 – Check the design
Within the Bridges and Structures Bureau at the Iowa DOT a final design engineer other than the bridge designer is assigned to give the bridge design an independent check at the time final plans are complete. During the checking process a final design engineer will review the soils package to ensure that all recommendations were followed and also will check structural, geotechnical, and drivability aspects of the design.

Other design organizations may perform checks at various stages of design rather than upon plan completion.

END DESIGN PHASE

BEGIN CONSTRUCTION PHASE

Step 11 – Request and check contractor's hammer data, and prepare bearing graph for WEAP control

After the bridge contract is let and prior to start of pile driving, the contractor completes Hammer Data sheets for the pile driving hammer that he/she plans to use. The Hammer Data sheets include all pertinent information including the cap (helmet) number and hammer identification information with details, hammer cushion, and pile cushion (where required), as well as pile size, pile length, and estimated pile driving resistance. The Construction and Materials Bureau uses the data received to complete a WEAP analysis for construction control during pile driving. Results from the WEAP analysis are then used to prepare an LRFD Bearing Graph (without the factor of safety used for allowable stress design). The Bearing Graph includes curves of nominal driving resistance versus blows per foot, and identifies specific driving conditions, where driving stress is a concern.

Step 12 - Observe construction, record driven resistance, and resolve any construction issues

If the recorded pile driving resistance at EOD is less than the target pile nominal driving resistance, then the pile is retapped about 24 hours after EOD. (The retap is a remedial measure that makes use of setup for an individual pile. If the 24-hour retap does not indicate enough driven resistance, an extension will be added the same day rather than wait to retap another day.)

Track 1, Example 3

Driven H-Pile in Cohesive Soil with Downdrag, and Construction Control Based on Wave Equation and No Planned Retap (*)

(*) On January 1, 2016 per BDM 6.2.4.6 the Bureau recommended the beneficial effects of setup be neglected in the determination of the target nominal pile driving resistance when downdrag is present. This example was not updated to reflect that recommendation.

General design and construction steps to be modified for project conditions

Design Steps

Step 1 Develop bridge situation plan (or TS&L, Type, Size, and Location). (1)
Step 2 Develop soils package, including soil borings and foundation recommendations. (1)
Step 3 Determine pile layout, pile loads including downdrag, and other design requirements. (1) This step includes structural checks.
Step 4 Estimate nominal geotechnical resistance for friction and end bearing.
Step 5 Select resistance factor(s) to estimate pile length based on the soil profile and construction control.
Step 6 Calculate required nominal pile resistance, R_n .
Step 7 Estimate contract pile length, L, considering downdrag, scour, pile uplift, lateral loading, and unbraced length, if applicable.
Step 8 Estimate target nominal pile driving resistance, $R_{ndr\text{-}T}$.
Step 9 Prepare CADD notes for bridge plans.
Step 10 Check the design. (2)

Construction Steps

Step 11 Request and check contractor's hammer data, and prepare bearing graph for WEAP control or other necessary items for alternate methods of construction control.
Step 12 Observe construction, record driven resistance, and resolve any construction issues.

(1) These steps determine the basic information for geotechnical pile design and will vary depending on bridge project and Bureau practice.
(2) Checking will vary depending on bridge project and Bureau practice.

Within the Bridges and Structures Bureau at the Iowa DOT the design steps that determine the basic information necessary for design of a steel H-pile generally follow as indicated in Steps 1-3. The steps involve communication among the preliminary design engineer, soils design engineer, and final design engineer. In other organizations the basic information may be determined differently, but that process generally should not affect the overall design of the pile.

Step 1 - Develop bridge situation plan (or TS&L, Type, Size, and Location)

For a typical bridge the preliminary design engineer plots topographical information, locates the bridge, determines general type of superstructure, location of substructure units, elevations of foundations, hydraulic information (if needed), and other basic information to characterize the bridge. The preliminary design engineer then prepares a TS&L sheet that shows a plan and longitudinal section of the bridge.

For this example, for a state project, the TS&L gives the following information needed for design of abutment piles:

- 120-foot single span, prestressed concrete beam superstructure

- Zero skew
- Integral abutments (because these are standard practice for non-skewed concrete bridges less than 575 feet in length with end or single spans not exceeding the length of standard prestressed concrete beams) [BDM 6.5.1.1.1]
- Pile foundations
- Bottom of abutment footing elevation 435 feet

Step 2 - Develop soils package, including soil borings and foundation recommendations
Based on locations of the abutments the soils design engineer orders soil borings, typically at least one per substructure unit. When the engineer receives the boring logs he/she arranges for them to be plotted on a longitudinal section, checks any special geotechnical conditions on the site, and writes a recommendation for foundation type with any applicable special design considerations.

For this example, the recommendations are the following:

- Downdrag due to consolidation settlement in the soft silty clay layer, with neutral plane at the top of the firm silty clay layer
- Friction piles with end bearing that tip out in the very firm glacial clay layer
- Steel H-piles for the integral abutments
- Structural Resistance Level – 1 (which does not require a driving analysis by the Construction and Materials Bureau during design [BDM 6.2.6.1]) Beginning on January 1, 2016 designers may increase the nominal structural pile resistance from SRL-1 to SRL-1.5 for steel H-piles at abutments with downdrag. See BDM 6.2.2.2 and 6.2.6.1 for additional information. Note that this example was not updated to reflect this policy.
- Normal driving resistance (This will lead to $\varphi_c = 0.60$ for the structural check.)
- No special site considerations for stability, settlement, or lateral movement (Therefore a Service I load will not be required for design.)
- Standard construction control based on WEAP analysis with no planned retap

The soil profile shown below includes the soil boring at the west abutment. Generally below the bottom of footing elevation the three layers are: 33 feet of soft silty clay, 13 feet of firm silty sand, and very firm glacial clay to the bottom of the boring at 115 feet.

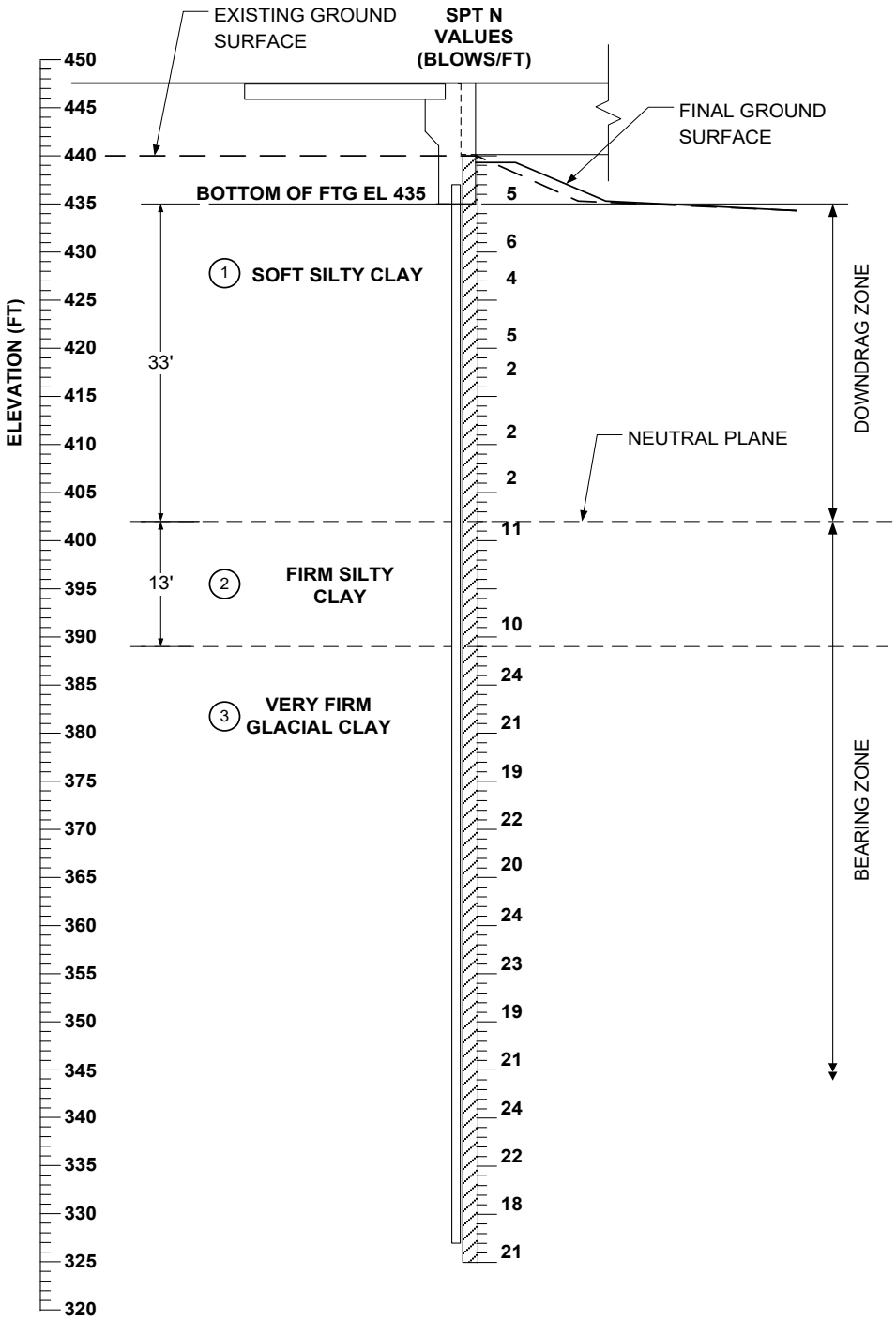

Track 1, Example 3-soil profile at west abutment

Step 3 - Determine pile layout, pile loads including downdrag, and other design requirements. This step includes structural checks.

The final design engineer begins design of the abutment piles with the TS&L and the soils design package. Because the bridge has a prestressed concrete beam superstructure and integral abutments the engineer selects HP 10×57 piles, following Bridge Design Manual policy [BDM 6.5.1.1.1].

Approximately 8 feet of embankment will be placed behind the abutment, and the soft silty clay layer is susceptible to consolidation settlement as noted by the soils design engineer. Therefore, the neutral plane is at the bottom of the soft silty clay. Soil above the neutral plane is in the "Downdrag Zone". Soil below the neutral plane is in the "Bearing Zone". Pile nominal resistance should be based on the resistance from the Bearing Zone, only. Soil in the Downdrag Zone induces downdrag load ($\gamma_{DD}DD$) on pile, in addition to the loads from the superstructure ($\sum\eta\gamma P$).

Although the bridge length is less than 130 feet and would not require prebored holes for the integral abutment piles [BDM 6.5.1.1.1], in this case the final design engineer has received permission to use 15-foot prebored holes to relieve part of the downdrag force. The permission involved consultation with the final bridge section leader.)

Notation: The same loads are designated in Step 3 with “P” and in Steps 6 and 8 with “Q”.

For the west abutment

$$\Sigma\eta\gamma P + \gamma_{DD}DD = 923 + (1.00)(DD) = P_u$$

Downdrag load (DD) in the Layer 1 soft silty clay will result from the clay below the bottom of the prebore over 33-15 = 18 feet. Average SPT N-value is about 3, and the unit nominal resistance is 1.2 kips/foot [BDM Table 6.2.7-2]. [Note - the unit nominal resistance for an HP10x57 pile in this soft silty clay layer with an average SPT N-value of 3 would be better approximated by 0.8 kips/foot; however, 1.2 kips/foot will continue to be used in this example.]

$$DD = (18)(1.2) = 22 \text{ kips (rounded)}$$

The soils package indicates normal driving resistance, therefore

$$\varphi_c = 0.60$$

The soils engineer recommends SRL-1 for which

$$P_n = 243 \text{ kips [BDM Table 6.2.6.1-1]}$$

Beginning on January 1, 2016 designers may increase the nominal structural pile resistance from SRL-1 to SRL-1.5 for steel H-piles at abutments with downdrag. See BDM 6.2.2.2 and 6.2.6.1 for additional information. Note that this example was not updated to reflect this policy.

Considering the TS&L and other project factors the final design engineer selects BTC beams [BDM Table 5.4.1.1.1]. For integral abutments with BTC beams and 15-foot prebored holes for the piles, the maximum P_n = 365 kips [BDM Table 6.5.1.1.1-1]. The SRL-1 recommendation controls, however.

Required number of piles with downdrag

$$n = P_u/\varphi P_n = (923 + n[1.00][22])/(0.60)(243),\ \ 123.8n = 923,\ \ n = 7.46$$

(If the soils information is not available at this point, the final designer may determine the number of piles at the SRL-1 limit without downdrag. Later when

the soils information is available, the designer may add the downdrag amount to each pile if the extra load is below the SRL-1.5 limit per BDM 6.2.2.2 and 6.2.6.1 or may add one or more piles to the abutment. The SRL-1.5 limit was introduced on January 1, 2016.)

Based on the overall project the final design engineer rounds down in this case to 7 piles and discusses the decision with the soils engineer and supervising section leader. The integral abutment maximum P_n = 365 kips is at SRL-2 so there is additional resistance available above SRL-1.

Without downdrag the Strength I load per pile (needed for Step 6) then is

P_u = 923/7 = 132 kips/pile

The pile layout will be seven piles under the abutment plus one pile for each wing extension as shown below. (For the number of beams the designer checks the minimum number of piles, and for the abutment dimensions the designer checks the pile spacing guidelines [BDM 6.2.4.1]. Those checks are not shown here.) In this case the wing extension piles are added for abutment stability and are moderately loaded so they need not be checked for structural resistance.

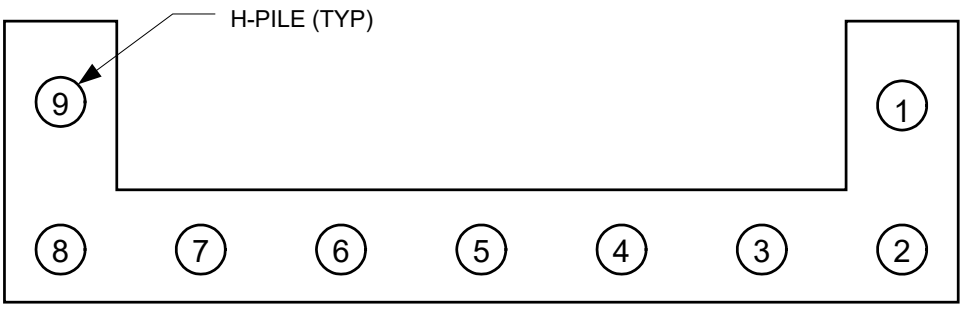

Track 1, Example 3-pile layout at west abutment

Step 4 - Estimate nominal geotechnical resistance for friction and end bearing
Based on the west abutment soil boring and BDM Tables 6.2.7-1 and 6.2.7-2, the final design engineer estimates the following nominal resistances for friction and end bearing as shown in the table below.

Track 1, Example 3-estimated nominal geotechnical resistance

Soil Stratum	Soil Description	Stratum Thickness (ft)	Average SPT N Value (blows/ft)	Estimated Nominal Resistance for Friction Pile (kips/ft)	Cumulative Nominal Friction Resistance at Bottom of Layer (1) (kips)	Estimated Nominal Resistance for End Bearing (kips/sq in)
1	Soft Silty Clay	18 below prebore	3	1.2	22	---
2	Firm Silty Clay	13	10	2.0	48	---
3	Very Firm Glacial Clay (30 feet below the natural ground elevation)	64	21	4.0	304	---
3	Very Firm Glacial Clay	---	21 (2)	---	---	1

(1) This information is used to develop the calculations in Step 7.
(2) The SPT N value for Layer 3 is near the lower limit for use of end bearing.

Step 5 - Select resistance factor to estimate pile length based on the soil profile and construction control
For a driven H-pile with construction control based on a WEAP analysis at EOD and no planned retap, the following resistance factor is recommended to estimate the contract pile length for cohesive soil [BDM Table 6.2.9-1]. Only cohesive soil was present below the west abutment.

φ = **0.65 for cohesive** soil, averaged over the full depth of estimated pile penetration

Step 6 - Calculate required nominal pile resistance, R_n

As mentioned in Step 3, in calculating required nominal pile resistance, downdrag load should be accounted for in addition to the loads from the superstructure. The required nominal pile resistance is:

$$R_n = (\sum \eta\gamma Q)/\varphi + (\gamma_DD\ DD)/\varphi$$

$$= 132/0.65 + (1.0)(22)/0.65$$

$$= 203 + 34$$

$$= 237 \text{ kips/pile}$$

where,

$\sum [\eta\gamma Q] = \gamma Q$ (Step 3)

with η =1.0 from BDM 6.2.3.1

γQ = 132 kips (Step 3)

γ_{DD} = 1.0 per BDM 6.2.4.3

DD = downdrag load caused by consolidation or deformation of a soft cohesive soil layer over a stiff layer, which is estimated using the BDM Table 6.2.7-2 as shown in Steps 3 and 4 = 22 kips

φ = 0.65 (Step 5)

Step 7 – Estimate contract pile length, L, considering downdrag

Based on the nominal resistance values in Step 4, the cumulative nominal geotechnical resistance, $R_{n\text{-}BB}$, per pile is calculated as follows, where D = depth in feet below the bottom of footing.

D_0 = 0 ft, $R_{n\text{-}BB0}$ = 0 kips
D_1 = 33 ft, $R_{n\text{-}BB1} = R_{n\text{-}BB0} + 0$ = 0 kips because downdrag zone provides no support
D_2 = 33 + 13 = 46 ft, $R_{n\text{-}BB2} = R_{n\text{-}BB1}$ + (2.0 kips/ft) (13 ft) = 0 + 26.0 = 26.0 kips
End bearing in Layer 3 = (1 ksi)(16.8 in^2) = 16.8 kips, $R_{n\text{-}BB3} = R_{n\text{-}BB2}$ + 16.8 = 42.8 kips
Required additional length in Layer 3 = (237 – 42.8)/4.0 = 49 feet
D_3 = 46 + 49 = 95 ft, $R_{n\text{-}BB4} = R_{n\text{-}BB3}$ + (4.0 kips/ft) (49 ft) = 42.8 + 196.0
= 238.8 kips > 237 kips

The contract pile length includes a 2-foot embedment in the footing and a 1-foot allowance for cutoff due to driving damage.

L = 95 + 2 + 1 = 98 feet

The length for steel H-piles is specified in 5-foot increments [BDM 6.2.4.2]. Therefore, the contract pile length is rounded to 100 feet.

Because the site has only cohesive soil within the embedded length of the pile, the resistance factor determined in Step 5 need not be checked for site classification.

Step 8 - Estimate target nominal pile driving resistance, $R_{ndr\text{-}T}$

The complete embedment length below the bottom of footing except for the prebored hole will contribute to pile driving resistance, i.e., resistance from the soil above the neutral plane needs to

be accounted for during pile driving. The pile embedment length is 82 feet, which is equal to the 100-foot contract pile length minus a 1-foot cutoff, 2 feet of embedment length in the concrete footing, and 15 feet of prebored hole.

On January 1, 2016 per BDM 6.2.4.6 the Bureau recommended the beneficial effects of setup be neglected in the determination of $R_{ndr\text{-}T}$ when downdrag is present. This example was not updated to reflect that recommendation.

For driven H-pile with WEAP analysis construction control and no planned retap, the following resistance factors, φ, are recommended to estimate the target nominal pile driving resistance for cohesive soils [BDM Table 6.2.9-3].

> **φ_{EOD} = 0.65 for cohesive soil,** averaged over the full depth of estimated pile penetration
> **φ_{SETUP} = 0.20 for cohesive soil,** averaged over the full depth of estimated pile penetration

It should be noted that the generalized soil category for both design stage and construction stage are the same, since only cohesive soils are encountered at this location. For piles penetrating both cohesive soils and non-cohesive soils, a separate generalized soil category is needed here, because the soil below prebored depth and above the neutral plane should be considered in pile driving resistance for construction stage, and this may result in a change in the generalized soil category and consequently the resistance factor.

At EOD, the factored target nominal resistance should overcome the factored target nominal resistance from the downdrag zone, in addition to the factored loads (loads from superstructure + downdrag load):

$$\sum \text{▒}\llbracket \eta\gamma Q + \gamma_DD\ DD = \varphi_TAR\ R_(ndr - T) - \varphi_TAR\ R_Sdd \rrbracket$$

where, R_{sdd} = Nominal driving resistance that accounts for the downdrag load estimated in Steps 4 and 6, which is equal to DD.

φ_{TAR} = Resistance factor for target nominal resistance

$$= \varphi_EOD + \varphi_SETUP\ (F_SETUP - 1) \quad \leq 1.00$$

and F_{SETUP} = Setup Factor.

The soil profile was used to calculate the average SPT N-value for cohesive soil penetrated by the driven pile over the contract pile length, as follows.

Calculated average SPT N-value = [(18′)(4) + (13′)(10) + (97′-33′-13′)(21)]/(97′-15′) = 16

Based on the pile setup factor chart shown below the average SPT N-value of 16 yields Setup Factors, F_{SETUP}, of 1.45 for 1-say retap, 1.53 for 3-day retap, and 1.58 for 7-day retap.

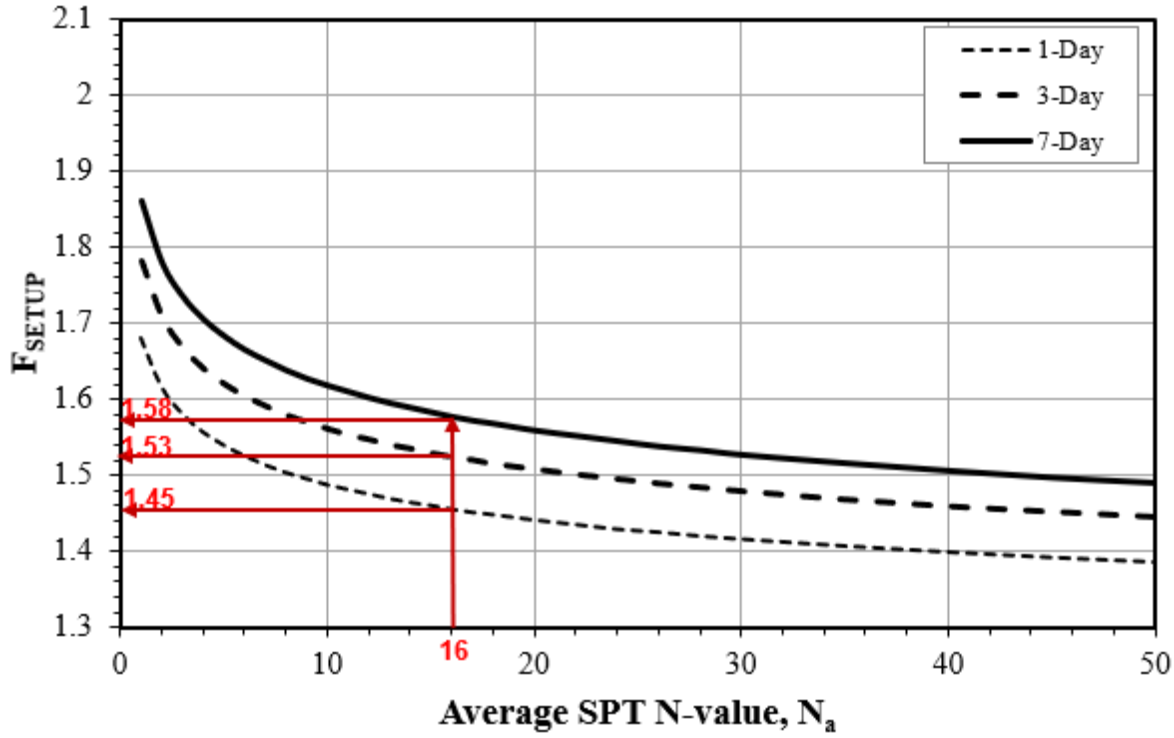

Track 1, Example 3-pile setup factor chart [BDM Figure 6.2.10]

The target pile driving resistance at End Of Drive is

$$R_(ndr - T) = (\sum \eta\gamma Q)/\varphi_TAR + (\gamma_DD\ DD)/\varphi_TAR + R_(Sdd, EOD)$$

$$= (\sum \eta\gamma Q)/(\varphi_EOD + \varphi_SETUP\ (F_SETUP - 1)\ ) + (\gamma_DD\ DD)/(\varphi_EOD + \varphi_SETUP\ (F_SETUP - 1)\ ) + R_Sdd$$

$$= 132/((0.65) + (0.20)(1.58 - 1)\ ) + (1.0)(22)/((0.65) + (0.20)(1.58 - 1)\ ) + 22$$

$$= 132/0.77 + 22/0.77 + 22$$

Note that $\varphi_{TAR} < 1.00$, OK

= 173 + 29 + 22

= 224 kips/pile = 112 tons/pile

The target nominal geotechnical resistance at 1-day retap then is:

$R_{1\text{-day}}$ = (173+29)(1.45)+22 = 314.9 kips = 157 tons, but not more than R_(ndr − T) computed with φ_{EOD} , not considering setup.

$R_{1\text{-day}} \leq$ (132 + 22)/0.65 + 22 = 258.9 kips = 129 tons

The 129 tons controls at 1-day retap.

The target nominal geotechnical resistance at 3-day retap then is:

$R_{3\text{-day}}$ = (173+29)(1.53)+22 = 331.1 kips = 166 tons, but not more than R_(ndr − T) computed with φ_{EOD} , not considering setup.

The 129 tons also controls at 3-day retap.

The target nominal geotechnical resistance at 7-day retap then is:

$R_{7\text{-day}}$ = (173+29)(1.58)+22 = 341.2 kips = 171 tons, but not more than R_(ndr − T) computed with φ_{EOD} , not considering setup.

The 129 tons also controls at 7-day retap.

Step 9 – Prepare CADD notes for the bridge plans
At this point the final design engineer selects the appropriate CADD notes and adds the specific pile load values to the notes [BDM 13.8.2].

E818: Abutment piles, LRFD contract length and resistance

THE CONTRACT LENGTH OF 100 FEET FOR THE WEST ABUTMENT PILES IS BASED ON A COHESIVE SOIL CLASSIFICATION, A TOTAL FACTORED AXIAL LOAD PER PILE (P_U) OF 154 KIPS, AND A GEOTECHNICAL RESISTANCE FACTOR (PHI) OF 0.65. TO ACCOUNT FOR SOIL CONSOLIDATION UNDER THE NEW FILL, THE FACTORED AXIAL LOAD INCLUDES A FACTORED DOWNDRAG LOAD OF 22 KIPS.

THE NOMINAL AXIAL BEARING RESISTANCE FOR CONSTRUCTION CONTROL WAS DETERMINED FROM A COHESIVE SOIL CLASSIFICATION AND A GEOTECHNICAL RESISTANCE FACTOR (PHI) OF 0.77. PILES ARE ASSUMED TO BE DRIVEN FROM A START ELEVATION AT THE BOTTOM OF PREBORE.

E819: Abutment piles, driving and construction control

THE REQUIRED NOMINAL AXIAL BEARING RESISTANCE FOR WEST ABUTMENT PILES IS 112 TONS AT END OF DRIVE (EOD). IF RETAPS ARE NECESSARY TO ACHIEVE BEARING, THE REQUIRED NOMINAL AXIAL BEARING RESISTANCE IS 129 TONS AT ONE-DAY OR LATER RETAP. THE PILE CONTRACT LENGTH SHALL BE DRIVEN AS PER PLAN UNLESS PILES REACH REFUSAL. CONSTRUCTION CONTROL REQUIRES A WEAP ANALYSIS WITH BEARING GRAPH.

Step 10 – Check the design
Within the Bridges and Structures Bureau at the Iowa DOT a final design engineer other than the bridge designer is assigned to give the bridge design an independent check at the time final plans are complete. During the checking process a final design engineer will review the soils package to ensure that all recommendations were followed and also will check structural, geotechnical, and drivability aspects of the design.

Other design organizations may perform checks at various stages of design rather than upon plan completion.

END DESIGN PHASE

BEGIN CONSTRUCTION PHASE

Step 11 – Request and check contractor's hammer data, and prepare bearing graph for WEAP control

After the bridge contract is let and prior to start of pile driving, the contractor completes Hammer Data sheets for the pile driving hammer that he/she plans to use. The Hammer Data sheets include all pertinent information including the cap (helmet) number and hammer identification information with details, hammer cushion, and pile cushion (where required), as well as pile size, pile length, and estimated pile driving resistance. The Construction and Materials Bureau uses the data received to complete a WEAP analysis for construction control during pile driving. Results from the WEAP analysis are then used to prepare an LRFD Bearing Graph (without the factor of safety used for allowable stress design). The Bearing Graph includes curves of nominal driving resistance versus blows per foot, and identifies specific driving conditions, where driving stress is a concern.

Step 12 - Observe construction, record driven resistance, and resolve any construction issues

During pile driving, the construction inspector records the hammer stroke and number of blows to advance the pile an equivalent penetration of 1 foot, and then converts the recorded information with the Bearing Graph to record the driven resistance per pile at EOD.

If the recorded pile driving resistance at EOD is less than the target pile nominal driving resistance, then the pile is retapped about 24 hours after EOD. (The retap is a remedial measure that makes use of setup for an individual pile. If the 24-hour retap does not indicate enough driven resistance, an extension will be added the same day rather than wait to retap another day.)

Track 1, Example 4
Driven H-Pile in Sand with Uplift Load, and Construction Control Based on Wave Equation and No Planned Retap

General design and construction steps to be modified for project conditions

Design Steps

Step 1	Develop bridge situation plan (or TS&L, Type, Size, and Location). (1)
Step 2	Develop soils package, including soil borings and foundation recommendations. (1)
Step 3	Determine pile layout, pile loads including downdrag, and other design requirements. (1) This step includes structural checks.
Step 4	Estimate nominal geotechnical resistance for friction and end bearing.
Step 5	Select resistance factor(s) to estimate pile length based on the soil profile and construction control.
Step 6	Calculate required nominal pile resistance, R_n .
Step 7	Estimate contract pile length, L, considering downdrag, scour, pile uplift, lateral loading, and unbraced length, if applicable.
Step 8	Estimate target nominal pile driving resistance, $R_{ndr\text{-}T}$.
Step 9	Prepare CADD notes for bridge plans.
Step 10	Check the design. (2)

Construction Steps

Step 11	Request and check contractor's hammer data, and prepare bearing graph for WEAP control or other necessary items for alternate methods of construction control.
Step 12	Observe construction, record driven resistance, and resolve any construction issues.

(1) These steps determine the basic information for geotechnical pile design and will vary depending on bridge project and Bureau practice.
(2) Checking will vary depending on bridge project and Bureau practice.

Within the Bridges and Structures Bureau at the Iowa DOT, the design steps that determine the basic information necessary for design of a steel H-pile generally follow as indicated in Steps 1-3. The steps involve communication among the preliminary design engineer, soils design engineer, and final design engineer. In other organizations the basic information may be determined differently, but that process generally should not affect the overall design of the pile.

Step 1 - Develop bridge situation plan (or TS&L, Type, Size, and Location)
For a typical bridge the preliminary design engineer plots topographical information, locates the bridge, determines general type of superstructure, location of substructure units, elevations of foundations, hydraulic information (if needed), and other basic information to characterize the bridge. The preliminary design engineer then prepares a TS&L sheet that shows a plan and longitudinal section of the bridge.

For this example, for a state project, the TS&L gives the following information needed for design of the frame pier piles:

- 208-foot three span, prestressed concrete beam superstructure
- Zero skew
- Frame piers
- Pile foundation
- Bottom of pier footing elevation 435 feet
- No stream near pier

Step 2 - Develop soils package, including soil borings and foundation recommendations
Based on location of the bridge abutments and piers the soils design engineer orders soil borings, typically at least one per substructure unit. When the engineer receives the boring logs he/she arranges for them to be plotted on a longitudinal section, checks any special geotechnical conditions on the site, and writes a recommendation for foundation type with any applicable special geotechnical design considerations.

For this example, the recommendations are the following:

- Friction piles with end bearing that tip out in the granular material layer
- Steel H-piles for the frame pier footings
- Structural Resistance Level – 1 (which does not require a driving analysis by the Construction and Materials Bureau during design) [BDM 6.2.6.1]
- Normal driving resistance (This will lead to $\varphi_c = 0.6$ for the structural check.)
- No special site considerations for stability, settlement, or lateral movement (Therefore a Service I load will not be required for design.)
- Standard construction control based on WEAP analysis with no planned retap

Subsurface conditions at Pier #1 shown on the next page have been characterized based on a representative test boring, as indicated in the soil profile. Below the bottom of footing elevation,

subsurface conditions generally consist of about 8 feet of fine sand, underlain by about 10 feet of coarse sand, 22 feet of gravelly sand, and deeper granular material. The test boring was terminated at a depth of 70 feet below the existing ground surface, and no ground water was reported to have been encountered at the test boring.

Note that for river bridges (not in this example) ground water may require additional analysis as discussed in BDM 6.2.7 as follows:

> …In non-cohesive soil, groundwater can significantly reduce the effective stress and resulting nominal pile bearing resistance. This is of particular concern for a river bridge that is founded on friction piles driven in granular soil below the phreatic surface. In that case, the designer should consider performing a separate analysis that accounts for the effective overburden pressure, to verify that the estimated pile length based on the unit resistance values is reasonable.

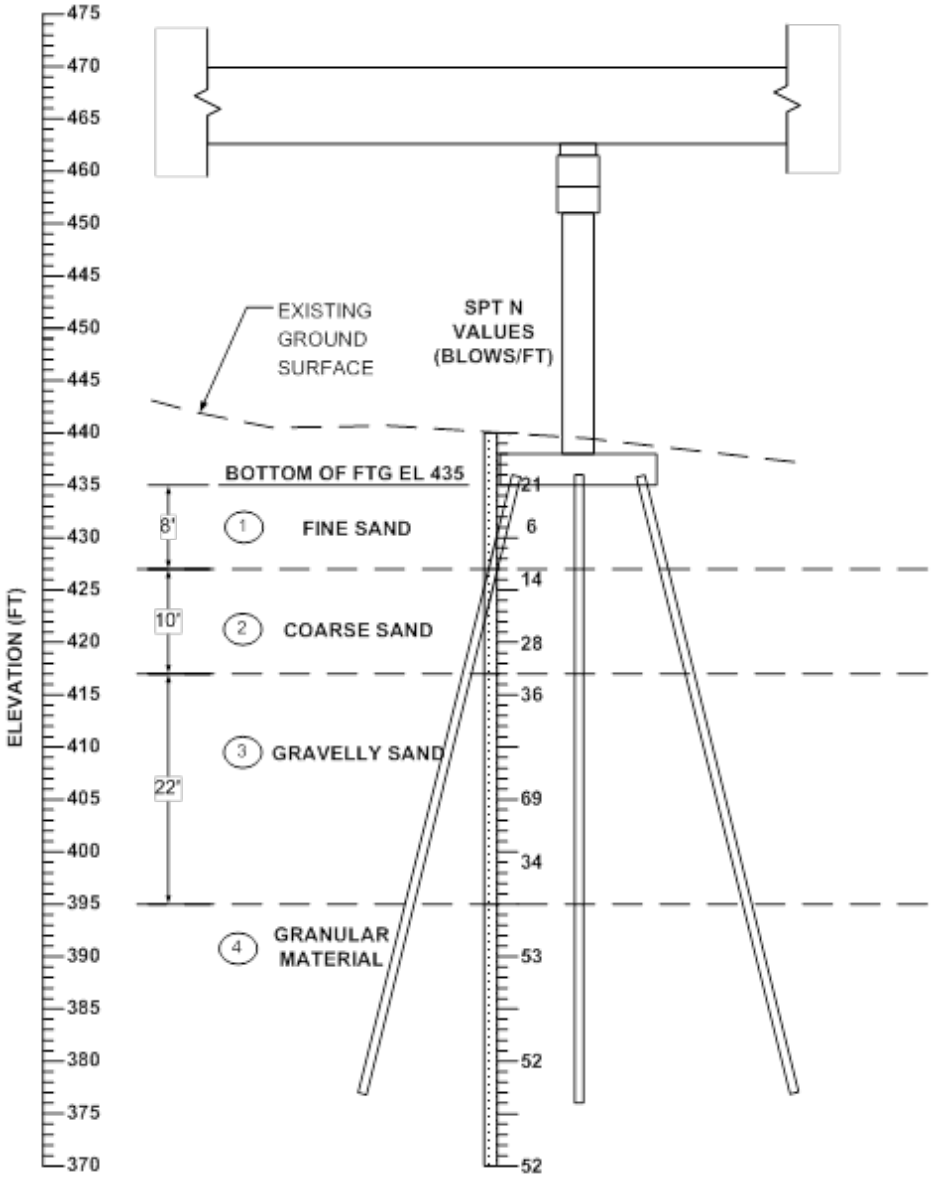

Track 1, Example 4-soil profile at Pier #1

Step 3 - Determine pile layout, pile loads, and other design requirements. This step includes structural checks.

The final design engineer begins design of the pier piles with the TS&L and the soils design package. Because the bridge has a prestressed concrete beam superstructure and integral abutments the engineer selects HP 10×57 piles for Pier #1 to match abutment piles, following Bridge Design Manual policy [BDM 6.5.1.1.1 and 6.2.1.1].

Based on RCPIER analysis at the strength limit state and Bridge Design Manual policy for pile spacing and number of piles [BDM 6.5.4.1.1], the final design engineer determines the following:

- Nine Grade 50, HP 10×57 piles per each of three column footings as shown below
- Selected perimeter piles battered at 1:4, as indicated by the arrows shown below
- Maximum factored, compression load for one pile at the Strength I limit state = 132 kips
- Maximum factored, uplift load for one pile at the Strength III limit state = 40 kips
- Maximum factored, lateral load at the Strength III limit state = 4 kips

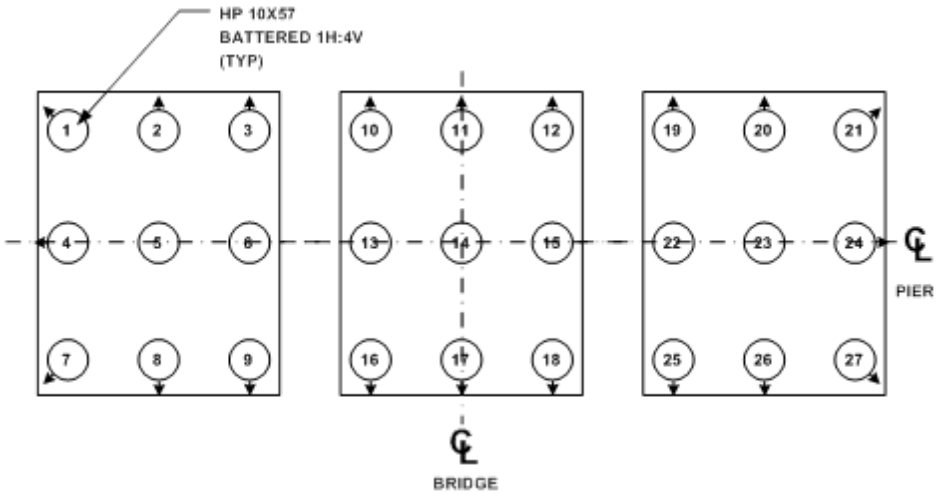

Track 1, Example 4-pile layout at Pier #1

Notation: The same loads are designated in Step 3 with "P" (for structural checks) and in Steps 6 and 8 with "Q" (for geotechnical and driving checks).

Check Structural Resistance Level – 1 (SRL-1) recommended by the soils engineer [BDM Table 6.2.6.1-1].

For a HP 10x57, P_n = 243 kips

The soils package indicates normal driving resistance, therefore

$\varphi_c = 0.60$

Then

$\varphi_c P_n = (0.60)(243) = 146$ kips > [P_u = 132 kips] OK

The lateral load for a pile is within the limit set in BDM Table 6.2.6.1-2, and no further lateral analysis is required.

$V_u = 4$ kips $<$ $[\varphi_v V_n = (1.00)(18) = 18$ kips$]$ OK

The simple lateral load check needs to be modified for non-typical conditions, such as large lateral load or stringent lateral deflection limit.

By inspection, an HP 10x57 will have sufficient resistance for a factored tension load of 40 kips.

In Step 7 there will be a check to ensure that the pile will not pull out of the ground, but will it pull out of the footing?

> The nominal resistance of an HP10 pile (or larger) with at least 12 inches of embedment in the concrete footing is 100 kips. The resistance factor for the strength limit state is φ = 0.25. [BDM 6.2.6.1]. The factored uplift resistance for pile embedment in the concrete footing is:
>
> (100 kips)(0.25) = 25 kips < 40 kips **NOT Good**.

Therefore, one foot of embedment into the concrete footing is not sufficient to provide the required uplift resistance. The preferred solution then will be to use an approved anchorage methodology as found in BDM 6.2.6.1.

Step 4 - Estimate nominal friction and end bearing geotechnical resistance
Based on the pier soil boring and BDM Tables 6.2.7-1 and 6.2.7-2, the final design engineer estimates the following nominal resistances for friction and end bearing as shown in the table below.

Track 1, Example 4-estimated nominal geotechnical resistance

Soil Stratum	Soil Description	Stratum Thickness (ft)	Average SPT-N Value (blows/ft)	Estimated Nominal Resistance Value for Friction Pile (kips/ft)	Estimated Nominal Resistance Value for End Bearing Pile (kips/in^2)
1	Fine Sand	8	13	2.0	--- (1)
2	Coarse Sand	10	21	2.8	--- (1)
3	Gravelly Sand	22	35	2.8	3
4	Granular Material	---	52	4.0	4

(1) End bearing is not considered for fine sand, coarse sand, or gravelly sand with SPT-N value less than 25 blows/ft, per BDM Table 6.2.7-1.

Step 5 - Select resistance factors to estimate pile length based on the soil profile and construction control
For driven H-pile with construction control based on a WEAP analysis and no planned retap, the following resistance factor, φ, is recommended for use to estimate the contract pile length in non-cohesive soil under axial compressive load [BDM Table 6.2.9-1].

> **φ = 0.55 for non-cohesive soil**

For driven H-pile in axial tension under uplift load, the following resistance factors, φ_{UP}, are

recommended for uplift check [BDM Table 6.2.9-2]. (Resistance factors for uplift are the resistance factors for compression with a reduction factor of 0.75.)

φ_{UP} = 0.40 for non-cohesive soils at strength limit state.
φ_{UP} = 0.45 for cohesive and mixed soils at strength limit state.
φ_{UP} = 0.75 for non-cohesive, cohesive and mixed soils at extreme event limit state.

Step 6 - Calculate required nominal pile resistance, R_n
The required nominal pile resistance in compression can be calculated as:

$$R_n = (\sum \llbracket \eta\gamma Q + \gamma_DD\ DD \rrbracket)/\varphi = (132 + 0)/0.55 = 240 \text{ kips/pile}$$

where

$\sum \llbracket \eta\gamma Q \rrbracket$ = 132 kips (Step 3)

$\gamma_{DD}DD$ = 0 (no downdrag)

φ = 0.55 (Step 5)

Step 7 – Estimate contract pile length, L, considering uplift
Based on the nominal resistance values in Step 4, the cumulative nominal compression geotechnical resistance, $R_{n\text{-}BB}$, per pile is calculated as follows, where D = depth in feet below the bottom of footing.

D_0 = 0 ft, $R_{n\text{-}BB0}$ = 0 kips
D_1 = 8 ft, $R_{n\text{-}BB1} = R_{n\text{-}BB0}$ + (2.0 kips/ft) (8 ft) = 16.0 kips
D_2 = 8 + 10 = 18 ft, $R_{n\text{-}BB2} = R_{n\text{-}BB1}$ + (2.8 kips/ft) (10 ft) = 16.0 + 28.0 = 44.0 kips
D_3 = 18 + 22 = 40 ft, $R_{n\text{-}BB3} = R_{n\text{-}BB2}$ + (2.8 kips/ft) (22 ft) = 44.0 + 61.6 = 105.6 kips
End bearing in Layer 4 = (4 ksi)(16.8 in^2) = 67.2 kips, $R_{n\text{-}BB4} = R_{n\text{-}BB3}$ + 67.2 = 172.8 kips
Required additional length in Layer 4 = (240 – 172.8)/4.0 = 17 feet
D_4 = 40 + 17 = 57 ft, $R_{n\text{-}BB5} = R_{n\text{-}BB4}$ + (4.0 kips/ft) (17 ft) = 172.8 + 68.0
= 240.8 kips > 240 kips needed

The contract pile length includes a 1-foot embedment in the footing [BDM Table 6.2.5] and a 1-foot allowance for cutoff due to driving damage [BDM 6.2.4.2].

L = 57 + 1 + 1 = 59 feet

The length for steel H-piles is specified in 5-foot increments [BDM 6.2.4.2]. Therefore, the contract pile length is rounded to 60 feet.

Uplift may be checked using the previous computations for pile length. Neglecting end bearing (which cannot provide uplift resistance) and including the additional one foot of pile due to round-up, the nominal resistance is

240.8 kips – 67.2 kips + (4.0 kips/ft) (1 ft) = 177.6 kips

With a resistance factor of φ_{UP} = 0.40 for non-cohesive soil (Step 5), the factored uplift resistance is:

$R_{UP} = \varphi_{UP}\ R_{n_UP}$ = (0.40)(177.6) = 71 kips > Factored Uplift Load = 40 kips OK

Minimum required pile driven length for uplift resistance is:

18 ft + [40 kips - (0.40)(44.0 kips)] / [(0.40)(2.8 kips/ft)] = 18 ft + 20 ft = 38 ft, say 40ft.

The final design engineer also should check group uplift resistance. For this design guide, it is assumed that the pile spacing is large enough so that group uplift resistance does not control.

The soil below the footing is entirely non-cohesive so there is no need to check the site classification.

Step 8 - Estimate target nominal pile driving resistance, $R_{ndr\text{-}T}$

The complete embedment length below the bottom of footing will contribute to pile driving resistance. Since there was no need to make allowance for pre-boring, downdrag load, or scour, the pile embedment length below bottom of footing will be the same as that considered to estimate R_n.

For driven H-pile with WEAP analysis construction control and no planned retap, the following resistance factor, φ, is recommended to estimate the target nominal pile driving resistance in non-cohesive soil [BDM Table 6.2.9-3].

φ_{TAR} = 0.55 for non-cohesive soil

Therefore, the target nominal pile driving resistance is

$$R_(ndr - T) = (\sum ▒ [\![\eta\gamma Q + \gamma_DD\ DD]\!])/\varphi_TAR = (132 + 0)/0.55 = 240 \text{ kips} = 120 \text{ tons}$$

Step 9 – Prepare CADD notes for the bridge plans

At this point the final design engineer selects the appropriate CADD notes and adds the specific pile load values to the notes [BDM 13.8.2].

E718: Pier piles, LRFD contract length and resistance

THE CONTRACT LENGTH OF 60 FEET FOR THE PIER #1 PILES IS BASED ON A NON-COHESIVE SOIL CLASSIFICATION, A TOTAL FACTORED AXIAL LOAD PER PILE (P_U) OF 132 KIPS, AND A GEOTECHNICAL RESISTANCE FACTOR (PHI) OF 0.55 FOR SOIL. PIER PILES ALSO WERE DESIGNED FOR A FACTORED TENSION FORCE OF 50 KIPS.

THE NOMINAL AXIAL BEARING RESISTANCE FOR CONSTRUCTION CONTROL WAS DETERMINED FROM A NON-COHESIVE SOIL CLASSIFICATION AND A GEOTECHNICAL RESISTANCE FACTOR (PHI) OF 0.55. PILES ARE ASSUMED TO BE DRIVEN FROM A START ELEVATION AT THE BOTTOM OF FOOTING.

E719: Pier piles, LRFD driving and construction control

THE REQUIRED NOMINAL AXIAL BEARING RESISTANCE FOR PIER #1 PILES IS 120 TONS AT END OF DRIVE OR RETAP. THE PILE CONTRACT LENGTH SHALL BE DRIVEN AS PER PLAN UNLESS PILES REACH REFUSAL. IN NO CASE SHALL A PILE BE EMBEDDED LESS THAN 40 FEET. CONSTRUCTION CONTROL REQUIRES A WEAP ANALYSIS AND BEARING GRAPH.

Step 10 – Check the design

Within the Bridges and Structures Bureau at the Iowa DOT a final design engineer other than the bridge designer is assigned to give the bridge design an independent check at the time final plans are complete. During the checking process a final design engineer will review the soils package to ensure that all recommendations were followed and also will check structural, geotechnical,

and drivability aspects of the design.

Other design organizations may perform checks at various stages of design rather than upon plan completion.

END DESIGN PHASE

BEGIN CONSTRUCTION PHASE

Step 11 – Request and check contractor's hammer data, and prepare bearing graph for WEAP control

After the bridge contract is let and prior to start of pile driving, the contractor completes Hammer Data sheets for the pile driving hammer that he/she plans to use. The Hammer Data sheets include all pertinent information including the cap (helmet) number and hammer identification information with details, hammer cushion, and pile cushion (where required), as well as pile size, pile length, and estimated pile driving resistance. The Construction and Materials Bureau uses the data received to complete a WEAP analysis for construction control during pile driving. Results from the WEAP analysis are then used to prepare an LRFD Bearing Graph (without the factor of safety used for allowable stress design). The Bearing Graph includes curves of nominal driving resistance versus blows per foot, and identifies specific driving conditions, where driving stress is a concern.

Step 12 - Observe construction, record driven resistance, and resolve any construction issues

If the recorded pile driving resistance at EOD is less than the target pile nominal driving resistance, then the pile is retapped about 24 hours after EOD. (The retap is a remedial measure that makes use of setup for an individual pile. If the 24-hour retap does not indicate enough driven resistance, an extension will be added the same day rather than wait to retap another day.) For the site in this example, however, retaps are unlikely to be helpful because of the cohesionless soil that usually will not have significant setup.

Track 1, Example 5

Driven H-Pile in Cohesive Soil to Bedrock, and Construction Control Based on Wave Equation with No Planned Retap

(*) On January 1, 2016 per BDM 6.2.4.6 the Bureau recommended the beneficial effects of setup be neglected in the determination of the target nominal pile driving resistance when piles are driven to bedrock. This example was not updated to reflect that recommendation.

General design and construction steps to be modified for project conditions

Design Steps

Step 1 Develop bridge situation plan (or TS&L, Type, Size, and Location). (1)

Step 2 Develop soils package, including soil borings and foundation recommendations. (1)

Step 3 Determine pile layout, pile loads including downdrag, and other design requirements. (1) This step includes structural checks.

Step 4 Estimate nominal geotechnical resistance for friction and end bearing.

Step 5 Select resistance factor(s) to estimate pile length based on the soil profile and construction control.

Step 6 Calculate required nominal pile resistance, R_n .

Step 7 Estimate contract pile length, L, considering downdrag, scour, pile uplift, lateral loading, and unbraced length, if applicable.

Step 8 Estimate target nominal pile driving resistance, $R_{ndr\text{-}T}$.

Step 9 Prepare CADD notes for bridge plans.

Step 10 Check the design. (2)

Construction Steps

Step 11 Request and check contractor's hammer data, and prepare bearing graph for WEAP control or other necessary items for alternate methods of construction control.

Step 12 Observe construction, record driven resistance, and resolve any construction issues.

(1) These steps determine the basic information for geotechnical pile design and will vary depending on bridge project and Bureau practice.

(2) Checking will vary depending on bridge project and Bureau practice.

Within the Bridges and Structures Bureau at the Iowa DOT the design steps that determine the basic information necessary for design of a steel H-pile generally follow as indicated in Steps 1-3. The steps involve communication among the preliminary design engineer, soils design engineer, and final design engineer. In other organizations the basic information may be determined differently, but that process generally should not affect the overall design of the pile.

Step 1 - Develop bridge situation plan (or TS&L, Type, Size, and Location)

For a typical bridge the preliminary design engineer plots topographical information, locates the bridge, determines general type of superstructure, location of substructure units, elevations of foundations, hydraulic information (if needed), and other basic information to characterize the bridge. The preliminary design engineer then prepares a TS&L sheet that shows a plan and longitudinal section of the bridge.

For this example for a state project, the TS&L gives the following information needed for design of abutment piles:

- 312-foot three span, prestressed concrete beam superstructure

- Seven BTC beam cross section
- Zero skew
- Integral abutments
- Pile foundations with 10-foot prebored holes
- Bottom of west abutment footing elevation 5 feet below natural ground elevation

Step 2 - Develop soils package, including soil borings and foundation recommendations
Based on locations of the abutments the soils design engineer orders soil borings, typically at least one per substructure unit. When the engineer receives the boring logs he/she arranges for them to be plotted on a longitudinal section, checks any special geotechnical conditions on the site, and writes a recommendation for foundation type with any applicable special design considerations.

For this example, the recommendations are the following:

- Piles driven to hard shale bedrock at 40 feet below natural ground elevation at west abutment
- Steel H-piles for the integral abutments
- Structural Resistance Level – 2 (which does not require a driving analysis by the Construction and Materials Bureau during design [BDM 6.2.6.1]. SRL-2 in this case allows the designer to consider both friction and end bearing.)
- Normal driving resistance (This will lead to $\varphi_c = 0.60$ for the structural check.)
- No special site considerations for stability, settlement, or lateral movement (Therefore a Service I load will not be required for design.)
- Standard construction control based on WEAP analysis with no planned retap

The soil profile is as follows. Stratum 3 is divided into 3A for soil above the elevation 30 feet below natural ground and 3B below 3A. The distinction is for different friction values.

- Stratum 1- Topsoil 4 feet;
- Stratum 2 - Firm glacial clay 14 feet, average N-value = 12;
- Stratum 3A - Very firm glacial clay 12 feet, average N-value = 21;
- Stratum 3B - Very firm glacial clay 10 feet, average N-value 21; and
- Stratum 4 - Hard shale, average SPT N-value = 162.

Step 3 - Determine pile layout, pile loads, and other design requirements. This step includes structural checks.
The final design engineer begins design of the abutment piles with the TS&L and the soils design package. Because the bridge has a prestressed concrete beam superstructure and integral abutments, the engineer selects HP 10×57 piles, following Bridge Design Manual policy [BDM 6.5.1.1.1].

Notation: The same loads are designated in Step 3 with “P” and in Steps 6 and 8 with “Q”.

Based on total Strength I abutment load and Bridge Design Manual policy for pile spacing and number of piles [BDM 6.5.4.1.1], the final design engineer determines the following:

- Strength I factored load for west abutment (not including wing extension) piles = 1330 kips
- Nominal structural resistance per pile at SRL-2 = 365 kips [BDM Table 6.2.6.1-1]
- Nominal maximum structural resistance for an integral abutment pile with 10-foot prebore = 365 kips [BDM Table 6.5.1.1.1-1]
- Minimum number of piles based on structural resistance = 1330/(0.6)(365) = 6.07, round to 7
- Minimum number of piles based on superstructure cross section: 7 beams, therefore 7 piles [BDM 6.2.4.1]. (The designer also needs to check minimum and maximum pile spacing guidelines in BDM 6.2.4.1.)
- Seven piles with two wing extension piles as shown in the figure below, if geotechnical resistance is sufficient
- Strength I factored load per abutment pile, P_u = 1330/7 = 190 kips

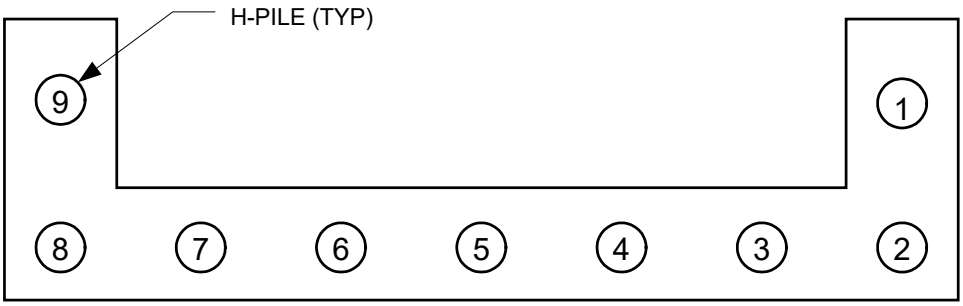

Track 1, Example 5-pile layout at an abutment

Because the bridge characteristics fall within integral abutment policy, the site has no unusual characteristics, the soils design engineer did not require further analysis, the project does not require staged construction, and construction will not be accelerated or delayed, there will be no need for lateral load or special analysis of the abutment piles. They may simply be designed for applied vertical load.

Step 4 - Estimate nominal geotechnical resistance for friction and end bearing
Based on the west abutment soil profile and BDM Tables 6.2.7-1 and 6.2.7-2, the final design engineer estimates the following nominal resistances for friction and end bearing as shown in the table below.

Track 1, Example 5-estimated nominal geotechnical resistance

Soil Stratum	Soil Description	Stratum Thickness (ft)	Average SPT N Value (blows/ft)	Estimated Nominal Resistance for Friction Pile (kips/ft)	Cumulative Nominal Friction Resistance at Bottom of Stratum (kips)	Estimated Nominal Resistance for End Bearing (kips)
1	Topsoil	4 below natural ground	---	---	---	---
2	Firm Glacial Clay	14 total, 3 below prebore	12	2.8	8.4	---
3A	Very Firm Glacial Clay	12	21	2.8	33.6 + 8.4 = 42.0	---
3B	Very Firm Glacial Clay (30 feet below the natural ground elevation)	10	21	4.0	40.0 + 42.0 = 82.0	---
4	Hard Shale	---	162	---	---	(16.8)(12) = 201.6

Step 5 - Select resistance factors to estimate pile length based on the soil profile and construction control

For a driven H-pile with construction control based on a WEAP analysis at EOD and no planned retap, the following resistance factor is recommended to estimate the contract pile length for friction bearing in cohesive soil [BDM Table 6.2.9-1]. Only cohesive soil was present below the west abutment.

φ = **0.65 for cohesive soil**, averaged over the full depth of estimated pile penetration

Based on successful past practice with WEAP analysis, the following resistance factor will be used for end bearing on bedrock [BDM 6.2.9].

φ = **0.70 for bedrock**

Step 6 – Calculate required nominal pile resistance, R_n

In this example the pile length and geotechnical resistance is determined by the location of bedrock. The designer may simply check the factored resistance, φR_n. Using the results from Steps 4 and 5 and adding friction and end bearing factored resistances

$\varphi R_n = (0.65)(82.0) + (0.70)(201.6) = 194.4$ kips

$[\varphi R_n = 194.4 \text{ kips}] > [\gamma Q = 190 \text{ kips}]$ OK

In this case with piles driven to bedrock, if the factored geotechnical resistance were insufficient the final design engineer would need to increase the number or size of piles.

Step 7 – Estimate contract pile length, L

With piles driven to bedrock the contract length can be determined from known elevations and an estimate of the length driven into bedrock [BDM Table 6.2.4.2-2]. The recommendation in the table is that piles be driven 4 to 8 feet into hard shale ($50 \leq N \leq 200$). Interpolating first for N = 162:

$L_{br} = 4 + (8-4)(162-50)/(200-50) = 7$ feet

L = cutoff + embedment in abutment + prebore + soil layers below prebore + embedment in bedrock = 1+2+10+25+7 = 45 feet

The length for steel H-piles is specified in 5-foot increments [BDM 6.2.4.2]. Therefore, there is no need to round the 45-foot length, but the final design engineer could add 5 feet just to ensure that pile extensions would not be required if the elevation of bedrock is expected to vary over the length of the abutment.

Because the site has only cohesive soil within the length of the pile embedded in soil, the resistance factor determined in Step 5 need not be checked for site classification.

Step 8 - Estimate target nominal pile driving resistance, $R_{ndr\text{-}T}$

The driving resistance will depend on both the friction and end bearing resistances. Because the friction resistance will be achieved before the end bearing resistance, assume that the full friction resistance will be achieved and the remainder of the resistance will be end bearing. The fraction of friction resistance is computed as follows.

$F_{fr} = (0.65)(82.0)/190 = 0.28$

The fraction for end bearing then is

$F_{eb} = 1 – 0.28 = 0.72$

(*) On January 1, 2016 per BDM 6.2.4.6 the Bureau recommended the beneficial effects of setup be neglected in the determination of the target nominal pile driving resistance when pile is driven to bedrock. This example was not updated to reflect that recommendation.

For driven H-piles with WEAP analysis construction control and no planned retap, the following resistance factors, φ, are recommended to estimate the target nominal pile driving resistance for friction in cohesive soils [BDM Table 6.2.9-3].

φ_{EOD} = 0.65 for cohesive soil, averaged over the full depth of estimated pile penetration

φ_{SETUP} = 0.20 for cohesive soil, averaged over the full depth of estimated pile penetration

Determine next the resistance factor for friction in the soil, including setup.

$N_a = [(3)(12) + (22)(21)]/25 = 20$

From the graph for seven-day setup, $F_{SETUP} = 1.55$

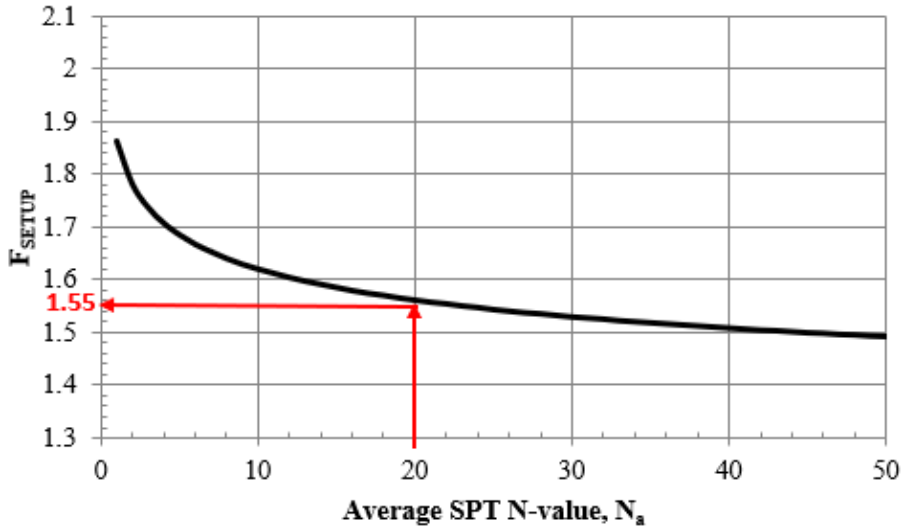

Track 1, Example 5-pile setup factor chart [BDM Figure 6.2.10]

Then determine the target resistance factor for friction in the soil.

φ_{TAR} = Resistance factor for target nominal resistance ≤ 1.00

$= \varphi_EOD + \varphi_SETUP\ (F_SETUP - 1)$

= 0.65 + (0.20)(1.55-1) = 0.76

Note that φ_{TAR} < 1.00, OK

With the estimated fractions of friction and end bearing, target resistance factor for friction, and the resistance factor of 0.70 for end bearing [BDM 6.2.9], compute the target pile driving resistance at End of Drive.

$R_{ndr\text{-}T}$ = 190/[(0.28)(0.76) + (0.72)(0.70)] = 265 kips = 133 tons

Step 9 – Prepare CADD notes for bridge plans

At this point the final design engineer selects the appropriate CADD note and adds the specific pile load values to the notes [BDM 13.8.2]. When driving to rock, retaps are ineffective and do not need to be mentioned in the driving and construction control note.

E818: Abutment piles, LRFD contract length and resistance

THE CONTRACT LENGTH OF 45 FEET FOR THE WEST ABUTMENT PILES IS BASED ON A COHESIVE SOIL CLASSIFICATION, A TOTAL FACTORED AXIAL LOAD PER PILE (P_U) OF 190 KIPS, AND A GEOTECHNICAL RESISTANCE FACTOR (PHI) OF 0.65 FOR SOIL AND 0.70 FOR ROCK END BEARING.

THE NOMINAL AXIAL BEARING RESISTANCE FOR CONSTRUCTION CONTROL WAS DETERMINED FROM A COHESIVE SOIL CLASSIFICATION AND A GEOTECHNICAL RESISTANCE FACTOR (PHI) OF 0.76 FOR SOIL AND 0.70 FOR ROCK END BEARING. PILES ARE ASSUMED TO BE DRIVEN FROM A START ELEVATION AT THE BOTTOM OF PREBORE.

E819: Abutment piles, driving and construction control

THE REQUIRED NOMINAL AXIAL BEARING RESISTANCE FOR WEST ABUTMENT PILES IS 133 TONS AT END OF DRIVE. THE PILE CONTRACT LENGTH SHALL BE DRIVEN AS PER PLAN UNLESS PILES REACH REFUSAL. CONSTRUCTION CONTROL REQUIRES A WEAP ANALYSIS WITH BEARING GRAPH.

Step 10 – Check the design

Within the Bridges and Structures Bureau at the Iowa DOT a final design engineer other than the bridge designer is assigned to give the bridge design an independent check at the time final plans are complete. During the checking process a final design engineer will review the soils package to ensure that all recommendations were followed and also will check structural, geotechnical, and drivability aspects of the design.

Other design organizations may perform checks at various stages of design rather than upon plan completion.

END DESIGN PHASE

BEGIN CONSTRUCTION PHASE

Step 11 – Request and check contractor's hammer data, and prepare bearing graph for WEAP control

After the bridge contract is let and prior to start of pile driving, the contractor completes Hammer Data sheets for the pile driving hammer that he/she plans to use. The Hammer Data sheets include all pertinent information including the cap (helmet) number and hammer identification information with details, hammer cushion, and pile cushion (where required), as well as pile size, pile length, and required (or target) nominal axial pile driving resistance. For state projects the Construction and Materials Bureau uses the data received to complete a WEAP analysis for construction control during pile driving. Results from the WEAP analysis are then used to prepare an LRFD Bearing Graph (without the factor of safety used for allowable stress design). The Bearing Graph includes hammer stroke height curves that relate blows per foot to nominal driving resistance, and identifies specific driving conditions, where driving stress is a concern.

Step 12 - Observe construction, record driven resistance, and resolve any construction issues

During pile driving, the construction inspector records the hammer stroke and number of blows to advance the pile an equivalent penetration of 1 foot, and then converts the recorded information with the Bearing Graph to record the driven resistance per pile at EOD.

If the recorded pile driving resistance at EOD is less than the required (or target) nominal axial pile driving resistance, then the pile typically is retapped about 24 hours after EOD. However, when driving to rock as in this case it is unlikely that retaps would be successful because the amount of friction resistance is only about one-quarter of the total resistance (In this case if EOD does not indicate enough driven resistance, an extension will be added.)

Track 1, Example 6

Driven Pipe Pile in Non-Cohesive Soil with Scour, and Construction Control Based on Wave Equation and No Planned Retap

General design and construction steps to be modified for project conditions

Design Steps

Step 1 Develop bridge situation plan (or TS&L, Type, Size, and Location). (1)

Step 2 Develop soils package, including soil borings and foundation recommendations. (1)

Step 3 Determine pile layout, pile loads including downdrag, and other design requirements. (1) This step includes structural checks.

Step 4 Estimate nominal geotechnical resistance for friction and end bearing.

Step 5 Select resistance factor(s) to estimate pile length based on the soil profile and construction control.

Step 6 Calculate required nominal pile resistance, R_n .

Step 7 Estimate contract pile length, L, considering downdrag, scour, pile uplift, lateral loading, and unbraced length, if applicable.

Step 8 Estimate target nominal pile driving resistance, $R_{ndr\text{-}T}$.

Step 9 Prepare CADD notes for bridge plans.

Step 10 Check the design. (2)

Construction Steps

Step 11 Request and check contractor's hammer data, and prepare bearing graph for WEAP control or other necessary items for alternate methods of construction control.

Step 12 Observe construction, record driven resistance, and resolve any construction issues.

(1) These steps determine the basic information for geotechnical pile design and will vary depending on bridge project and Bureau practice.

(2) Checking will vary depending on bridge project and Bureau practice.

Use of pipe piles in Iowa is unusual at the present time. However, within the Bridges and Structures Bureau at the Iowa DOT, the design steps that determine the basic information necessary for geotechnical design of a steel pipe pile generally would follow as indicated in Steps 1-3. The steps involve communication among the preliminary design engineer, soils design engineer, and final design engineer. In other organizations the basic information may be determined differently, but that process generally should not affect the overall design of the pile.

Step 1 - Develop bridge situation plan (or TS&L, Type, Size, and Location)

For a typical bridge the preliminary design engineer plots topographical information, locates the bridge, determines general type of superstructure, location of substructure units, elevations of foundations, hydraulic information (if needed), and other basic information to characterize the bridge. The preliminary design engineer then prepares a TS&L sheet that shows a plan and longitudinal section of the bridge.

For this example for a state project, the TS&L gives the following information needed for design of Pier #1 piles:

- 120-foot, three-span continuous concrete slab superstructure over a small stream
- 40-foot roadway width
- 25-degree skew

- P10L pile bents
- Bottom of pier cap elevation 907 feet
- Streambed elevation 895 feet
- Design scour elevation 888 feet (This indicates 7 feet of scour to be considered at the strength limit state.)
- Check scour elevation 887 feet (This indicates 8 feet of scour to be considered at the extreme event limit state.)
- Relatively constant ground elevation at Pier #1

Step 2 - Develop soils package, including soil borings and foundation recommendations
Based on location of the abutments and pile bents the soils design engineer orders soil borings, typically at least one per substructure unit. When the engineer receives the boring logs he/she arranges for them to be plotted on a longitudinal section, checks any special geotechnical conditions on the site, and writes a recommendation for foundation type with any applicable special design considerations.

Subsurface conditions at Pier #1 have been characterized based on representative test borings. The streambed is underlain by 5 feet of soft to stiff silty clay ($N_a = 4$), 15 feet of fine sand ($N_a = 16$), 40 feet of medium sand ($N_a = 20$), and bouldery gravel and hard shale.

For this example, the recommendations are the following:

- Displacement piles, either concrete-filled steel pipe or prestressed concrete, that tip out in the medium sand layer
- P10L nominal resistance (which does not require a driving analysis by the Construction and Materials Bureau during design)
- No downdrag
- Normal driving resistance
- No special site considerations for stability, settlement, lateral movement, or bearing below the stream [See BDM 6.2.7 with respect to river bridges.] (Therefore a Service I load will not be required for design.)
- Standard construction control based on WEAP analysis with no planned retap

Step 3 - Determine pile layout, pile loads, and other design requirements. This step includes structural checks.

Notation: The same loads are designated in Step 3 with "P" and in Steps 6 and 8 with "Q".

The final design engineer begins design of the pile bent piles with the TS&L and the soils design package and determines the total factored load at Pier #1.

$P_u = 1125$ kips

For the bridge configuration and pile bents in this example, which are quite typical, the engineer selects a monolithic cap as preferred by the Bureau [BDM 5.6.1.1.1 and 6.6.4.2.1].

The engineer then checks to ensure that the simplified method for design of pile bents is applicable [BDM 6.6.4.2.1].

- Bridge length = 120 feet < 250 feet OK
- Roadway width = 40 feet < 44 feet OK
- Skew = 25 degrees < 45 degrees OK
- Ground slope along Pier #1 is minimal, certainly < 1:10 OK
- By observation other guidelines for use of the simplified method are met, provided that pile spacing meets the minimum. Pile spacing will be checked below.

Based on the recommendation for displacement piles the engineer selects concrete-filled steel pipe piles. (In Track 1, Example 7 the engineer makes the alternate selection of prestressed concrete piles.)

The unbraced height of the pipe piles from bottom of monolithic cap to design scour is

907-888 = 19 feet

Based on the P10L Standard or BDM Table 6.6.4.2.1.3 the 19-foot height is too large for a 14-inch diameter pile and a 16-inch diameter pile is required.

19 feet > 18 feet maximum for 14-inch pile NG
19 feet < 22 feet maximum for 16-inch pile OK

In this example the 16-inch pile maximum height of 22 feet also exceeds the pile height of 20 feet at check scour. If that were not the case the engineer would need to use judgment and/or analysis to either accept the pile as adequate for design scour and adequate for check scour at the extreme event reduced load, or investigate a larger pipe pile.

Development of the P10L standard included analysis for various typical conditions involving moment at the top of a pile, and the nominal axial resistance given on the standard was limited accordingly. Thus, for typical bridges such as the one in this example, the piles may be designed for axial geotechnical resistance without additional consideration of typical eccentric and lateral loads.

From the P10L Standard or BDM Table 6.6.4.2.1.3 the 16-inch pipe pile has a nominal axial resistance of 137 kips. The BDM Table 6.6.4.2.1.3 footnote indicates that the nominal resistance is to be used with a resistance factor of 0.80, which is from the combined flexure and axial load analysis used in development of the simplified method [AASHTO-LRFD 6.5.4.2]. Thus the number of piles required for Pier #1 is the following:

$n = P_u/\varphi_c P_n = 1125/(0.80)(137) = 10.26$, use 11 piles

P_u per pile = 1125/11 = 102 kips

Pile spacing will be about 4.5 feet, which is larger than the minimum, (2.5) (1.33) = 3.33 feet OK [BDM 6.6.4.2.1]

End piles will be battered at 1:12 in keeping with Bureau policy [BDM 6.6.1.1.3].

Because the simplified method for design of pile bents is based on a combined moment and axial load analysis with consideration of slenderness near the top of the pile, the axial load without moment at the bottom of the pile does not control. To demonstrate, abbreviated computations for the bottom of the pile using the AASHTO LRFD Specifications for filled tube composite members follow [AASHTO-LRFD 6.9.5.1, 6.9.5.2, and 6.9.4.2].

$KL/r_s = 0$ and $\lambda = 0$ because there is no unbraced length at the bottom of the pile

$F_e = F_y + C_2 f'_c(A_c/A_s) = 35 + (0.85)(189.67/11.4) = 84.50$ ksi

$P_n = 0.66^{\lambda} F_e A_s = (0.66^0)(84.50)(11.4) = 963$ kips

For good driving conditions and pipe piles, $\varphi_c = 0.70$ [AASHTO-LRFD 6.5.4.2].

$\varphi_c P_n = (0.70(963) = 674$ kips >> $\varphi_c P_n = 110$ kips at the top of the pile (and less at the bottom of the pile), so the top controls as stated above. Even with a reduced φ_c for hard driving the top of the pile would control the structural design.

Use of pipe piles with the simplified method for pile bents has two additional guidelines, minimum height and minimum soil penetration [BDM Table 6.6.4.2.1.3].

12 feet above streambed without scour > 7 feet minimum OK

Check minimum soil penetration of 27 feet in Step 7.

For structural design in pile bent cases that do not fit the simplifications in BDM 6.6.4.2, see "Commentary Appendix for Technical Documents" available on the Bridges and Structures Bureau Bridge Design Manual web page or at:

https://iowadot.gov/bridge/policy/06-06-00PierLRFDCATD.pdf

Step 4 - Estimate nominal geotechnical resistance for friction and end bearing
Based on the subsurface information at the pile bents and BDM Tables 6.2.7-1 and 6.2.7-2, the final design engineer estimates the following nominal resistances for friction and end bearing as shown in the table.

Track 1, Example 6-estimated nominal geotechnical resistance

Soil Stratum	Soil Description	Stratum Thickness (ft)	Average SPT N Value (blows/ft)	Estimated Nominal Resistance for Friction Pile (1), (2) (kips/ft)	Cumulative Nominal Friction Resistance at Bottom of Layer (2) (kips)	Estimated Nominal Resistance for End Bearing (2) (kips)
1	Soft to Stiff Silty Clay above Scour Elevation	5	4	1.4	7.0	---
2A	Fine Sand above Scour Elevation	2	16	2.6	12.2	---
2	Fine Sand below Scour Elevation	13	16	2.6	46.0	---
3	Medium Sand	40	20	2.9	162.0	---
3	Medium Sand	---	20	---	---	86

(1) These values are the average for 14-inch and 18-inch pipe piles. Because the soil categories and N-values do not fit the geotechnical resistance charts exactly there also is some judgment involved.
(2) This information is used to prepare the calculations in Step 7.

Step 5 - Select a resistance factor to estimate pile length based on the soil profile and construction control

By inspection, more than 70 percent of the embedded pile length will be in non-cohesive soil, and 100 percent of the length below design scour elevation will be in non-cohesive soil. For driven pipe piles with construction control based on a WEAP analysis at EOD and no planned retap, the following resistance factor is recommended to estimate the contract pile length [BDM Table 6.2.9-1].

φ = **0.55 for non-cohesive** soil, averaged over the full depth of estimated pile penetration

Step 6 - Calculate required nominal pile resistance, R_n

For non-cohesive soil, there is no significant setup effect. Therefore, the required nominal pile resistance can be calculated as:

$$R_n = (\sum [\eta\gamma Q + \gamma_DD\ DD])/\varphi = (102 + 0)/0.55 = 185.5 \text{ kips/pile}$$

where

$\sum \eta\gamma Q = \gamma Q = 102$ kips (Step 3)

$\gamma_{DD} DD = 0$ (no downdrag)

$\varphi = 0.55$ (Step 5)

Step 7 – Estimate contract pile length, L, considering scour and unbraced length

Based on the nominal and cumulative resistance values in Step 4, the nominal geotechnical resistance, $R_{n\text{-}BB}$, per pile is calculated as follows, where D = depth in feet below the streambed.

$D_0 = 0$ ft, $R_{n\text{-}BB0} = 0$ kips
$D_1 = 5$ ft, $R_{n\text{-}BB1} = R_{n\text{-}BB0} + 0 = 0$ kips because scour zone provides no support
$D_2 = 5 + 2 = 7$ ft, $R_{n\text{-}BB2} = R_{n\text{-}BB1} + 0 = 0$ kips because scour zone provides no support
$D_3 = 7 + 13 = 20$ ft, $R_{n\text{-}BB3} = R_{n\text{-}BB2} + (2.6 \text{ kips/ft})(13 \text{ ft}) = 0 + 33.8 = 33.8$ kips
End bearing in Layer 3 = 86 kips, $R_{n\text{-}BB4} = R_{n\text{-}BB3} + 86 = 119.8$ kips
Required additional length in Layer 3 = (185.5 – 119.8)/2.9 = 22.7, rounded to 23 feet
$D_4 = 20 + 23 = 43$ ft, $R_{n\text{-}BB5} = R_{n\text{-}BB4} + (2.9 \text{ kips/ft})(23 \text{ ft}) = 119.8 + 66.7$
$= 186.5 \text{ kips} > 185.5 \text{ kips}$

gThe length for steel pipe piles should be specified to the nearest one-foot increment. (Pipe pile lengths should account for cutoff but not be rounded to the nearest 5-foot increment.)

The contract pile length includes 12 feet above stream bed, a 1-foot embedment in the cap, and a 1-foot cutoff for driving damage.

$L = 43 + 12 + 1 + 1 = 57$ feet

The minimum soil penetration below design scour is 27 feet for the simplified method of pile bent design [Step 3 and BDM Table 6.6.4.2.1.3].

L_E = 57 - 1 - 1 – 12 – 7 = 36 feet > 27 feet OK

The plan note should include a minimum embedment of 27 + 7 = 34 feet below streambed so that there is at least 27 feet at design scour.

Step 8 - Estimate target nominal pile driving resistance, $R_{ndr\text{-}T}$

The complete embedment length below the streambed will contribute to pile driving resistance, i.e., the soil resistance above scour elevation which was ignored in Step 4 should be considered in pile driving resistance, $R_{ndr\text{-}T}$.

The complete pile embedment length is 43 feet, which is equal to the 57-foot contract pile length minus the pile height above streambed, embedment length in the concrete cap, and cutoff estimate.

The pipe pile will penetrate 38 feet of non-cohesive soil below the streambed.

% non-cohesive soil = [38/43] (100) = 88% > 70%

Therefore, the generalized soil category for pile driving (construction stage) is also "non-cohesive". It should be noted that it is possible for piles for a substructure to have different soil categories during the design stage and during the construction stage.

For driven pipe pile with WEAP analysis construction control and no planned retap, the following resistance factor, φ_{TAR}, is recommended to estimate the target nominal pile driving resistance for non-cohesive soil [BDM Table 6.2.9-3].

φ_{TAR} = 0.55 for non-cohesive soil, averaged over the full depth of estimated pile penetration

$$R_(ndr - T) = (\sum ⟦\eta\gamma Q + \gamma_DD\ DD⟧)/\varphi_TAR + R_SCOUR$$

$$= (102 + 0)/0.55 + 12.2$$

= 185.5 + 12.2 = 197.7 kips/pile = 99 tons/pile

where R_{SCOUR} = 12.2 kips (Step 4)

Step 9 – Prepare CADD notes for bridge plans

At this point the final design engineer selects the appropriate CADD notes and adds the specific pile values to the notes.

E718: Pier piles, LRFD contract length and resistance

THE CONTRACT LENGTH OF 57 FEET FOR THE PIER #1 PILES IS BASED ON A NON-COHESIVE SOIL CLASSIFICATION, A TOTAL FACTORED AXIAL LOAD PER PILE (P_U) OF 102 KIPS, AND A GEOTECHNICAL RESISTANCE FACTOR (PHI) OF 0.55 FOR SOIL.

THE NOMINAL AXIAL BEARING RESISTANCE FOR CONSTRUCTION CONTROL WAS DETERMINED FROM A NON-COHESIVE SOIL CLASSIFICATION AND A GEOTECHNICAL RESISTANCE FACTOR (PHI) OF 0.55 FOR SOIL. PILES ARE ASSUMED TO BE DRIVEN FROM A START ELEVATION AT THE STREAMBED ELEVATION. DESIGN SCOUR (200-YEAR) WAS ASSUMED TO AFFECT 7 FEET OF EMBEDDED PILE LENGTH AND CAUSE 12 KIPS OF DRIVING RESISTANCE.

E719: Pier piles, LRFD driving and construction control

THE REQUIRED NOMINAL AXIAL BEARING RESISTANCE FOR PIER #1 PILES IS 99 TONS AT END OF DRIVE OR RETAP. THE PILE CONTRACT LENGTH SHALL BE DRIVEN AS PER PLAN UNLESS PILES REACH REFUSAL. IN NO CASE SHALL A PILE BE EMBEDDED LESS THAN 34 FEET BELOW THE STREAMBED. CONSTRUCTION CONTROL REQUIRES A WEAP ANALYSIS AND BEARING GRAPH.

Step 10 – Check the design

Within the Bridges and Structures Bureau at the Iowa DOT a final design engineer other than the bridge designer is assigned to give the bridge design an independent check at the time final plans are complete. During the checking process a final design engineer will review the soils package to ensure that all recommendations were followed and also will check structural, geotechnical, and drivability aspects of the design.

Other design organizations may perform checks at various stages of design rather than upon plan completion.

END DESIGN PHASE

BEGIN CONSTRUCTION PHASE

Step 11 – Prepare bearing graph

After the bridge contract is let and prior to start of pile driving, the contractor completes Hammer Data sheets for the pile driving hammer that he/she plans to use. The Hammer Data sheets include all pertinent information including the cap (helmet) number and hammer identification information with details, hammer cushion, and pile cushion (where required), as well as pile size, pile length, and estimated pile driving resistance. The Construction and Materials Bureau uses the data received to complete a WEAP analysis for construction control during pile driving. Results from the WEAP analysis are then used to prepare an LRFD Bearing Graph (without the factor of safety used for allowable stress design). The Bearing Graph includes curves of nominal driving resistance versus blows per foot, and identifies specific driving conditions, where driving stress is a concern.

Step 12 - Observe construction, record driven resistance, and resolve any construction issues

Usually if the recorded pile driving resistance at EOD is less than the target pile nominal driving resistance the pile is retapped about 24 hours after EOD. (The retap is a remedial measure that makes use of setup for an individual pile. If the 24-hour retap does not indicate enough driven resistance, an extension will be added the same day rather than wait to retap another day.) In this example it is unlikely that there would be a significant amount of setup because of the non-cohesive soil, and extensions would be required if the driving resistance did not meet the target driving resistance at EOD.

Track 1, Example 7

Driven Prestressed Concrete Pile in Non-Cohesive Soil with Scour, and Construction Control Based on Wave Equation and No Planned Retap

General design and construction steps to be modified for project conditions

Design Steps

Step 1 Develop bridge situation plan (or TS&L, Type, Size, and Location). (1)

Step 2 Develop soils package, including soil borings and foundation recommendations. (1)

Step 3 Determine pile layout, pile loads including downdrag, and other design requirements. (1) This step includes structural checks.

Step 4 Estimate nominal geotechnical resistance for friction and end bearing.

Step 5 Select resistance factor(s) to estimate pile length based on the soil profile and construction control.

Step 6 Calculate required nominal pile resistance, R_n .

Step 7 Estimate contract pile length, L, considering downdrag, scour, pile uplift, lateral loading, and unbraced length, if applicable.

Step 8 Estimate target nominal pile driving resistance, $R_{ndr\text{-}T}$.

Step 9 Prepare CADD notes for bridge plans.

Step 10 Check the design. (2)

Construction Steps

Step 11 Request and check contractor's hammer data, and prepare bearing graph for WEAP control or other necessary items for alternate methods of construction control.

Step 12 Observe construction, record driven resistance, and resolve any construction issues.

(3) These steps determine the basic information for geotechnical pile design and will vary depending on bridge project and Bureau practice.

(4) Checking will vary depending on bridge project and Bureau practice.

Use of prestressed concrete piles in Iowa is unusual at the present time. However, within the Bridges and Structures Bureau at the Iowa DOT, the design steps that determine the basic information necessary for geotechnical design of a prestressed concrete pile generally would follow as indicated in Steps 1-3. The steps involve communication among the preliminary design engineer, soils design engineer, and final design engineer. In other organizations the basic information may be determined differently, but that process generally should not affect the overall design of the pile.

Step 1 - Develop bridge situation plan (or TS&L, Type, Size, and Location)

For a typical bridge the preliminary design engineer plots topographical information, locates the bridge, determines general type of superstructure, location of substructure units, elevations of foundations, hydraulic information (if needed), and other basic information to characterize the bridge. The preliminary design engineer then prepares a TS&L sheet that shows a plan and longitudinal section of the bridge.

For this example for a state project, the TS&L gives the following information needed for design of Pier #1 piles:

- 120-foot, three-span continuous concrete slab superstructure over a small stream
- 40-foot roadway width

- 25-degree skew
- P10L pile bents
- Bottom of pier cap elevation 907 feet
- Streambed elevation 895 feet
- Design scour elevation 888 feet (This indicates 7 feet of scour to be considered at the strength limit state.)
- Check scour elevation 887 feet (This indicates 8 feet of scour to be considered at the extreme event limit state.)
- Relatively constant ground elevation at Pier #1

Step 2 - Develop soils package, including soil borings and foundation recommendations
Based on location of the abutments and pile bents the soils design engineer orders soil borings, typically at least one per substructure unit. When the engineer receives the boring logs he/she arranges for them to be plotted on a longitudinal section, checks any special geotechnical conditions on the site, and writes a recommendation for foundation type with any applicable special design considerations.

Subsurface conditions at Pier #1 have been characterized based on representative test borings. The streambed is underlain by 5 feet of soft to stiff silty clay ($N_a = 4$), 15 feet of fine sand ($N_a = 16$), 40 feet of medium sand ($N_a = 20$), and bouldery gravel and hard shale.

For this example, the recommendations are the following:

- Displacement piles, either concrete-filled steel pipe or prestressed concrete, that tip out in the medium sand layer
- P10L nominal resistance (which does not require a driving analysis by the Construction and Materials Bureau during design)
- No downdrag
- Normal driving resistance
- No special site considerations for stability, settlement, lateral movement, or bearing below the stream [See BDM 6.2.7 with respect to river bridges.] (Therefore a Service I load will not be required for design.)
- Standard construction control based on WEAP analysis with no planned retap

Step 3 - Determine pile layout, pile loads, and other design requirements. This step includes structural checks.
Notation: The same loads are designated in Step 3 with "P" and in Steps 6 and 8 with "Q".

The final design engineer begins design of the pile bent piles with the TS&L and the soils design package and determines the total factored load at Pier #1.

$P_u = 1125$ kips

For the bridge configuration and pile bents in this example, which are quite typical, the engineer selects a monolithic cap as preferred by the Bureau [BDM 5.6.2.1.1 and 6.6.4.2.1].

The engineer then checks to ensure that the simplified method for design of pile bents is

applicable [BDM 6.6.4.2.1].

- Bridge length = 120 feet < 250 feet OK
- Roadway width = 40 feet < 44 feet OK
- Skew = 25 degrees < 45 degrees OK
- Ground slope along Pier #1 is minimal, certainly < 1:10 OK
- By observation other guidelines for use of the simplified method are met, provided that pile spacing meets the minimum. Pile spacing will be checked below.

Based on the recommendation for displacement piles the engineer selects prestressed concrete piles. (In Track 1, Example 6 the engineer makes the alternate selection of concrete-filled steel pipe piles.)

The unbraced height of the prestressed concrete piles from bottom of monolithic cap to design scour is

907-888 = 19 feet

Based on the P10L Standard or BDM Table 6.6.4.2.1.3 the 19-foot height is too large for a 14-inch square pile and a 16-inch square pile is required.

19 feet > 18 feet maximum for 14-inch pile NG
19 feet < 22 feet maximum for 16-inch pile OK

In this example the maximum 16-inch pile height of 22 feet also exceeds the pile height of 20 feet at check scour. If that were not the case the engineer would need to use judgment and/or analysis to either accept the pile as adequate for design scour and adequate for check scour at the extreme event reduced load, or investigate a larger pipe pile.

Development of the P10L standard included analysis for various typical conditions involving moment at the top of a pile, and the nominal axial resistance given on the standard was limited accordingly. Thus, for typical bridges such as the one in this example, the piles may be designed for axial geotechnical resistance without additional consideration of eccentric and lateral loads.

From the P10L Standard or BDM Table 6.6.4.2.1.2 the 16-inch prestressed concrete pile has a nominal axial resistance of 146 kips. The BDM Table 6.6.4.2.1.2 footnote indicates that the nominal resistance is to be used with a resistance factor of 0.75, which is from the combined flexure and axial load analysis used in development of the simplified method [AASHTO-LRFD 5.5.4.2]. Thus the number of piles require for Pier #1 is the following:

$n = P_u/\varphi_c P_n = 1125/(0.75)(146) = 10.27$, use 11 piles

P_u per pile = 1125/11 = 102 kips

Pile spacing will be about 4.5 feet, which is larger than the minimum, (2.5)(1.33) = 3.33 feet OK [BDM 6.6.4.2.1]

End piles will be battered at 1:12 in keeping with Bureau policy [BDM 6.6.1.1.3].

Because the simplified method for design of pile bents is based on a combined moment and axial load analysis at the top of the pile, the axial load without moment at the bottom of the pile does not control.

Use of prestressed concrete piles with the simplified method for pile bents has two additional

guidelines, minimum height and minimum soil penetration [BDM Table 6.6.4.2.1.2].

12 feet above streambed without scour > 7 feet minimum OK

Check minimum soil penetration of 27 feet in Step 7.

For structural design in pile bent cases that do not fit the simplifications in BDM 6.6.4.2, see "Commentary Appendix for Technical Documents" available on the Bridges and Structures Bureau Bridge Design Manual web page or at:

https://iowadot.gov/bridge/policy/06-06-00PierLRFDCATD.pdf

Step 4 - Estimate nominal geotechnical resistance for friction and end bearing
Based on the subsurface information at the pile bents and BDM Tables 6.2.7-1 and 6.2.7-2, the final design engineer estimates the following nominal resistances for friction and end bearing as shown in the table.

Track 1, Example 7-estimated nominal geotechnical resistance

Soil Stratum	Soil Description	Stratum Thickness (ft)	Average SPT N Value (blows/ft)	Estimated Nominal Resistance for Friction Pile (1), (2) (kips/ft)	Cumulative Nominal Friction Resistance at Bottom of Layer (2) (kips)	Estimated Nominal Resistance for End Bearing (2) (kips)
1	Soft to Stiff Silty Clay above Scour Elevation	5	4	1.4	7.0	---
2A	Fine Sand above Scour Elevation	2	16	3.2	13.4	---
2	Fine Sand below Scour Elevation	13	16	3.2	55.0	---
3	Medium Sand	40	20	3.6	199.0	---
3	Medium Sand	---	20	---	---	108

(1) Because the soil categories and N-values do not fit the geotechnical resistance charts exactly there is some judgment involved in selecting and interpolating for these values.

(2) This information is used to prepare the calculations in Step 7.

Step 5 - Select a resistance factor to estimate pile length based on the soil profile and construction control

By inspection, more than 70 percent of the embedded pile length will be in non-cohesive soil, and 100 percent of the length below design scour elevation will be in non-cohesive soil. For driven prestressed concrete piles with construction control based on a WEAP analysis at EOD and no planned retap, the following resistance factor is recommended to estimate the contract pile length [BDM Table 6.2.9-1].

φ = **0.55 for non-cohesive** soil, averaged over the full depth of estimated pile penetration

Step 6 - Calculate required nominal pile resistance, R_n

For non-cohesive soil, there is no significant setup effect. Therefore, the required nominal pile resistance can be calculated as:

$$R_n = (\sum [\![\eta\gamma Q + \gamma_DD\ DD]\!])/\varphi = (102 + 0)/0.55 = 185.5 \text{ kips/pile}$$

where

$\sum\eta\gamma Q = \gamma Q = 102$ kips (Step 3)

$\gamma_{DD}DD = 0$ (no downdrag)

$\varphi = 0.55$ (Step 5)

Step 7 – Estimate contract pile length, L, considering scour and unbraced length
Based on the nominal and cumulative resistance values in Step 4, the nominal geotechnical resistance, $R_{n\text{-}BB}$, per pile is calculated as follows, where D = depth in feet below the streambed.

D_0 = 0 ft, $R_{n\text{-}BB0}$ = 0 kips
D_1 = 5 ft, $R_{n\text{-}BB1} = R_{n\text{-}BB0} + 0$ = 0 kips because scour zone provides no support
D_2 = 5 + 2 = 7 ft, $R_{n\text{-}BB2} = R_{n\text{-}BB1} + 0$ = 0 kips because scour zone provides no support
D_3 = 7 + 13 = 20 ft, $R_{n\text{-}BB3} = R_{n\text{-}BB2}$ + (3.2 kips/ft) (13 ft) = 0 + 41.6 = 41.6 kips
End bearing in Layer 3 = 108 kips, $R_{n\text{-}BB4} = R_{n\text{-}BB3}$ + 108 = 149.6 kips
Required additional length in Layer 3 = (185.5 – 149.6)/3.6 = 10.0 feet
D_4 = 20 + 10 = 30 ft, $R_{n\text{-}BB5} = R_{n\text{-}BB4}$ + (3.6 kips/ft) (10 ft) = 149.6 + 36.0
= 185.6 kips > 185.5 kips

The length for prestressed concrete piles is specified in one-foot increments [BDM 6.2.4.2], but extensions should be specified to the nearest 5 feet. In this example the pile is short enough that no initial extension is required, and the 43-foot length is the contract length. (Prestressed concrete pile lengths need not account for cutoff.)

The contract pile length includes 12 feet above stream bed and a 1-foot embedment in the cap.

L = 30 + 12 + 1 = 43 feet

The minimum soil penetration below design scour is 27 feet for the simplified method of pile bent design [Step 3 and BDM Table 6.6.4.2.1.2].

L_E = 43 - 1 – 12 – 7 = 23 feet < 27 feet NG, therefore increase contract length by 4 feet to 47 feet.

The plan note should include a minimum embedment of 27 + 7 = 34 feet below streambed so that there is at least 27 feet embedment at design scour. In this example the full contract length must be driven.

Step 8 - Estimate target nominal pile driving resistance, $R_{ndr\text{-}T}$
The complete embedment length below the streambed will contribute to pile driving resistance, i.e., the soil resistance above scour elevation which was ignored in Step 4 should be considered in pile driving resistance, $R_{ndr\text{-}T}$.

The complete pile embedment length is 34 feet, which is equal to the 47-foot contract pile length minus the pile height above streambed and embedment length in the concrete cap.

The pile will penetrate 27 feet of non-cohesive soil below the streambed.

% non-cohesive soil = [27/34] (100) = 79% > 70%

Therefore, the generalized soil category for pile driving (construction stage) is also "non-cohesive". It should be noted that it is possible for piles for a substructure to have different soil categories during the design stage and during the construction stage.

For driven prestressed concrete pile with WEAP analysis construction control and no planned retap, the following resistance factor, φ_{TAR}, is recommended to estimate the target nominal pile driving resistance for non-cohesive soil [BDM Table 6.2.9-3].

φ_{TAR} = 0.55 for non-cohesive soil, averaged over the full depth of estimated pile penetration

$$R_(ndr - T) = (\sum ▒ [\eta\gamma Q + \gamma_DD\ DD])/\varphi_TAR + R_SCOUR$$

$$= (102 + 0)/0.55 + 13.4$$

= 185.5 + 13.4 = 198.9 kips/pile = 100 tons/pile

where R_{SCOUR} = 13.4 kips (Step 4)

Step 9 – Prepare CADD notes for bridge plans
At this point the final design engineer selects the appropriate CADD notes and adds the specific pile values to the notes.

E718: Pier piles, LRFD contract length and resistance

THE CONTRACT LENGTH OF 47 FEET FOR THE PIER #1 PILES IS BASED ON A NON-COHESIVE SOIL CLASSIFICATION, A TOTAL FACTORED AXIAL LOAD PER PILE (P_U) OF 102 KIPS, AND A GEOTECHNICAL RESISTANCE FACTOR (PHI) OF 0.55 FOR SOIL.

THE NOMINAL AXIAL BEARING RESISTANCE FOR CONSTRUCTION CONTROL WAS DETERMINED FROM A NON-COHESIVE SOIL CLASSIFICATION AND A GEOTECHNICAL RESISTANCE FACTOR (PHI) OF 0.55 FOR SOIL. PILES ARE ASSUMED TO BE DRIVEN FROM A START ELEVATION AT THE STREAMBED ELEVATION. DESIGN SCOUR (200-YEAR) WAS ASSUMED TO AFFECT 7 FEET OF EMBEDDED PILE LENGTH AND CAUSE 13 KIPS OF DRIVING RESISTANCE.

E719: Pier piles, LRFD driving and construction control

THE REQUIRED NOMINAL AXIAL BEARING RESISTANCE FOR PIER #1 PILES IS 100 TONS AT END OF DRIVE OR RETAP. THE PILE CONTRACT LENGTH SHALL BE DRIVEN AS PER PLAN UNLESS PILES REACH REFUSAL. IN NO CASE SHALL A PILE BE EMBEDDED LESS THAN 34 FEET BELOW THE STREAMBED. CONSTRUCTION CONTROL REQUIRES A WEAP ANALYSIS AND BEARING GRAPH.

Step 10 – Check the design
Within the Bridges and Structures Bureau at the Iowa DOT a final design engineer other than the bridge designer is assigned to give the bridge design an independent check at the time final plans are complete. During the checking process a final design engineer will review the soils package to ensure that all recommendations were followed and also will check structural, geotechnical, and drivability aspects of the design.

Other design organizations may perform checks at various stages of design rather than upon plan completion.

END DESIGN PHASE

BEGIN CONSTRUCTION PHASE

Step 11 – Prepare bearing graph
After the bridge contract is let and prior to start of pile driving, the contractor completes Hammer Data sheets for the pile driving hammer that he/she plans to use. The Hammer Data sheets

include all pertinent information including the cap (helmet) number and hammer identification information with details, hammer cushion, and pile cushion (where required), as well as pile size, pile length, and estimated pile driving resistance. The Construction and Materials Bureau uses the data received to complete a WEAP analysis for construction control during pile driving. Results from the WEAP analysis are then used to prepare an LRFD Bearing Graph (without the factor of safety used for allowable stress design). The Bearing Graph includes curves of nominal driving resistance versus blows per foot, and identifies specific driving conditions, where driving stress is a concern.

Step 12 - Observe construction, record driven resistance, and resolve any construction issues

Usually if the recorded pile driving resistance at EOD is less than the target pile nominal driving resistance the pile is retapped about 24 hours after EOD. (The retap is a remedial measure that makes use of setup for an individual pile. If the 24-hour retap does not indicate enough driven resistance, an extension will be added the same day rather than wait to retap another day.) In this example it is unlikely that there would be a significant amount of setup because of the non-cohesive soil, and extensions would be required if the driving resistance did not meet the target driving resistance at EOD.

Track 2, Example 1

Driven H-Pile in Cohesive Soil with Construction Control Based on Iowa DOT ENR Formula and No Planned Retap

General design and construction steps to be modified for project conditions

Design Steps

Step 1 Develop bridge situation plan (or TS&L, Type, Size, and Location). (1)

Step 2 Develop soils package, including soil borings and foundation recommendations. (1)

Step 3 Determine pile layout, pile loads including downdrag, and other design requirements. (1) This step includes structural checks.

Step 4 Estimate nominal geotechnical resistance for friction and end bearing.

Step 5 Select resistance factor(s) to estimate pile length based on the soil profile and construction control.

Step 6 Calculate required nominal pile resistance, R_n .

Step 7 Estimate contract pile length, L, considering downdrag, scour, pile uplift, lateral loading, and unbraced length, if applicable.

Step 8 Estimate target nominal pile driving resistance, $R_{ndr\text{-}T}$.

Step 9 Prepare CADD notes for bridge plans.

Step 10 Check the design. (2)

Construction Steps

Step 11 Request and check contractor's hammer data, and prepare bearing graph for WEAP control or other necessary items for alternate methods of construction control

Step 12 Observe construction, record driven resistance, and resolve any construction issues.

(1) These steps determine the basic information for geotechnical pile design and will vary depending on bridge project and Bureau practice.

(2) Checking will vary depending on bridge project and Bureau practice.

Within the Bridges and Structures Bureau at the Iowa DOT the design steps that determine the basic information necessary for design of a steel H-pile generally follow as indicated in Track 1, Example 1. Because Track 2 will not be used by the Iowa DOT this example simply gives the basic information for the design. That information would be determined in various ways depending on the bridge owner (county or city) and any involved engineering consultants. The process generally should not affect the overall design of the pile. Because counties and cities typically follow state standards, this example contains references to the Bridge Design Manual [BDM].

Step 1 - Develop bridge situation plan (or TS&L, Type, Size, and Location)
An engineer involved in the bridge project plots topographical information, locates the bridge, determines general type of superstructure, location of substructure units, elevations of foundations, hydraulic information (if needed), and other basic information to characterize the bridge. The engineer then prepares a TS&L sheet that shows a plan and longitudinal section of the bridge.

For this example for a non-state project, the TS&L gives the following information needed for design of abutment piles:

- 120-foot single span, prestressed concrete beam superstructure
- Zero skew
- Integral abutments (because these are standard practice for non-skewed bridges less than 575 feet in length with end or single spans not exceeding the length of standard prestressed concrete beams) [BDM 6.5.1.1.1]
- Pile foundations, no prebored holes (because the bridge length is less than 130 feet) [BDM 6.5.1.1.1]
- Bottom of west abutment footing elevation 433 feet

Step 2 - Develop soils information, including soil borings and foundation recommendations
Based on location of the abutments an engineer involved in the bridge project orders soil borings, typically at least one per substructure unit. When the engineer receives the boring logs he/she arranges for them to be plotted on a longitudinal section, checks any special geotechnical conditions on the site, and develops recommendations for foundation type with any applicable special design considerations.

For this example, the recommendations are the following:

- Friction piles that tip out in the firm glacial clay layer
- Steel H-piles for the integral abutments
- Structural Resistance Level – 1 (which does not require a WEAP driving analysis during design for state projects [BDM 6.2.6.1]. It is likely then that construction control by formula, as in this example, would be adequate.)
- Normal driving resistance (This will lead to $\varphi_c = 0.6$ for the structural check.)
- No special site considerations for stability, settlement, or lateral movement (Therefore the Service I load will not be required for design.)
- Construction control based on the Iowa DOT ENR Formula (modified to remove factor of safety) with no planned retap

The soil profile shown below includes the following soil boring at the west abutment. Generally below the bottom of footing elevation there are three layers: 6 feet of soft silty clay, 9 feet of silty sand, and firm glacial clay to the bottom of the boring at 95 feet. Layer 3 is subdivided at a depth of 30 feet because nominal friction resistance step-increases at that elevation [BDM Table 6.2.7-2]. No groundwater was encountered in the boring.

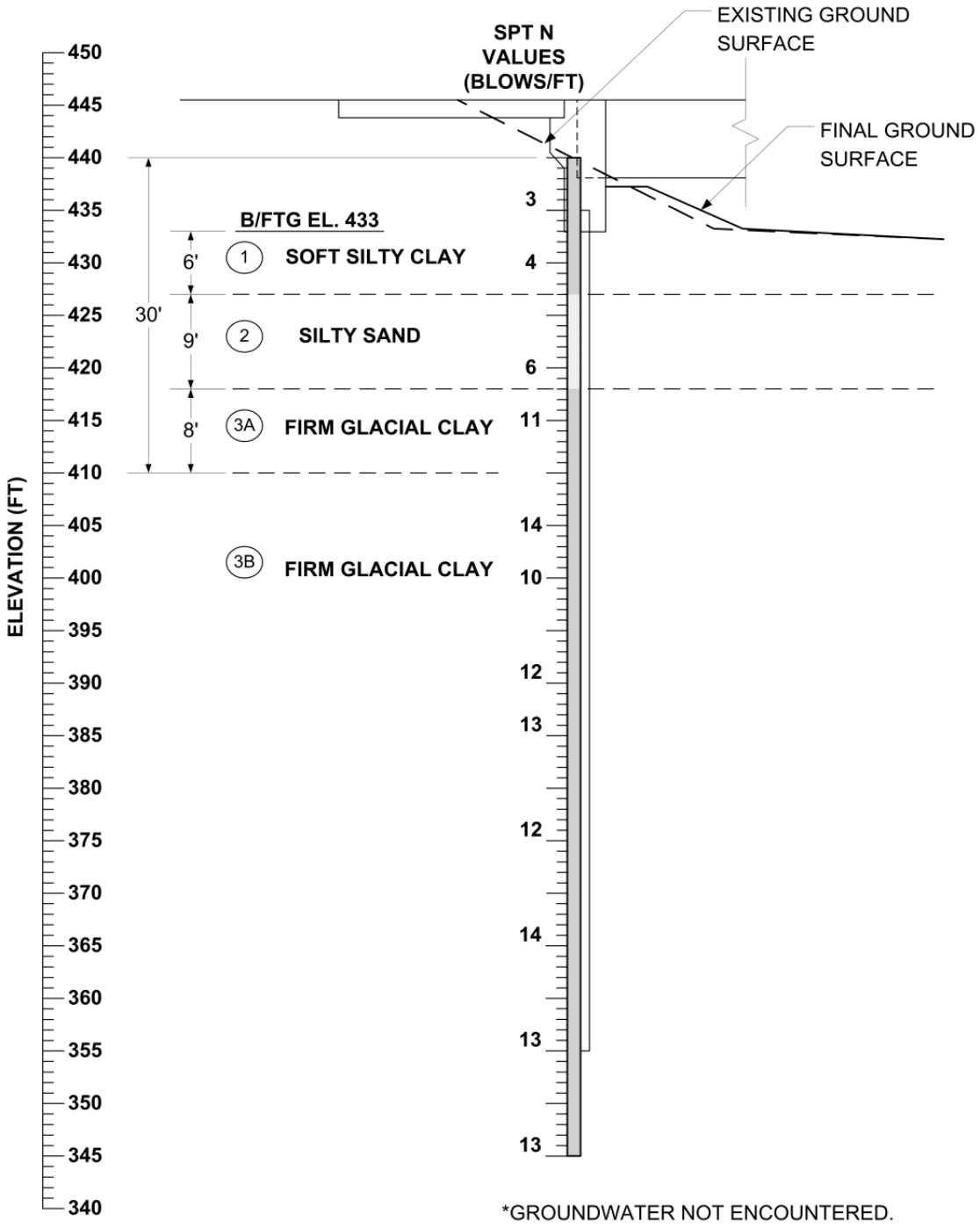

Track 2, Example 1-soil profile at west abutment

Step 3 - Determine pile layout, pile loads, and other design requirements. This step includes structural checks.

An engineer involved in the bridge project begins design of the abutment piles with the TS&L, boring logs, and foundation recommendations. Because the bridge has a prestressed concrete beam superstructure and integral abutments the engineer selects HP 10×57 piles, following Bridge Design Manual policy [BDM 6.5.1.1.1].

There is no uplift, downdrag, or scour. Because the bridge characteristics fall within integral abutment policy, the site has no unusual characteristics, the soils design engineer did not require further analysis, and construction will not be accelerated or delayed, there will be no need for lateral load or special analysis of the abutment piles. They may simply be designed for vertical load.

Notation: The same loads are designated in Step 3 with "P" and in Steps 6 and 8 with "Q".

For the west abutment

$$\Sigma\eta\gamma P + \gamma_{DD}DD = 895 + 0 = 895 \text{ kips} = P_u$$

The soils package indicates normal driving resistance, therefore

$$\varphi_c = 0.60$$

The soils engineer recommends SRL-1 for which

$$P_n = 243 \text{ kips [BDM Table 6.2.6.1-1]}$$

Considering the TS&L and other project factors the final design engineer selects BTC beams [BDM Table 5.4.1.1.1]. For integral abutments with BTC beams and prebored holes for the piles, the maximum P_n = 365 kips [BDM Table 6.5.1.1.1-1]. With the short span, the prebored holes are not necessary and, for this project, 365 kips would be the limit per integral abutment pile. The SRL-1 value controls, however.

Required number of piles

$$n = P_u/\varphi P_n = 895/(0.60)(243) = 6.14, \text{ round to 7 piles}$$

Each pile then must carry

$$P_u = 895/7 = 128 \text{ kips}$$

The pile layout will be seven piles under the abutment plus one pile for each wing extension as shown below. (For the number of beams the designer checks the minimum number of piles, and for the abutment dimensions the designer checks the pile spacing guidelines [BDM 6.2.4.1]. Those checks are not shown here.) In this case the wing extension piles are added for abutment stability and are moderately loaded so they need not be checked for structural resistance.

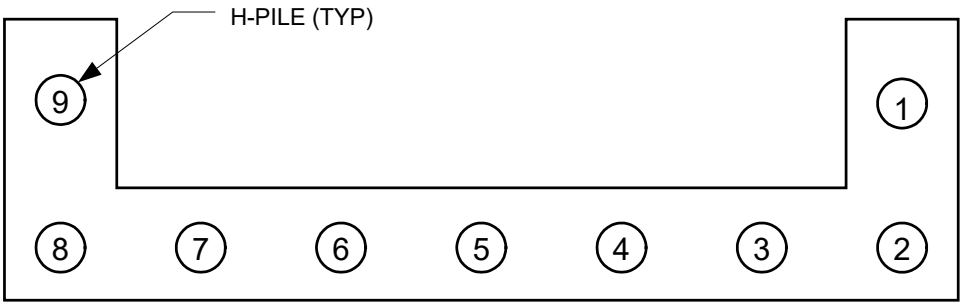

Track 2, Example 1-pile layout at west abutment

Step 4 - Estimate nominal geotechnical resistance for friction
Based on the west abutment soil boring and BDM Table 6.2.7-2, the engineer estimates the following unit nominal resistances for friction bearing.

Track 2, Example 1-estimated nominal unit geotechnical resistance

Soil Stratum	Soil Description		Stratum Thickness (ft)	Average SPT N Value (blows/ft)	Estimated Unit Nominal Resistance for Friction Pile (kips/ft)
1	Soft Silty Clay		6	4	0.8
2	Silty Sand		9	6	1.2
3A	Firm Glacial Clay	within 30 feet of natural ground elevation	8	11	2.8
3B		more than 30 feet below natural ground elevation	65	12	3.2

The firm glacial clay stratum has been divided into two parts, to delineate the embedded pile length that is within 30 feet of the natural ground surface as noted in the BDM geotechnical resistance chart [BDM Table 6.2.7-2]. Application of the chart to estimate the nominal resistance values is illustrated on the next page. Note that the SPT N values are too small for use of end bearing in Layer 3B [BDM Table 6.2.7-1].

Track 2, Example 2-BDM geotechnical resistance chart [BDM Table 6.2.7-2]

SOIL DESCRIPTION	BLOW COUNT		ESTIMATED NOMINAL RESISTANCE VALUES FOR FRICTION PILE IN KIPS PER FOOT										
	N-VALUE		WOOD	STEEL "H"			PRESTRESSED			STEEL PIPE			
	MEAN	RANGE	PILE	10	12	14	12	14	16	10	12	14	18
Alluvium or Loess													
Very soft silty clay	1	0 - 1	0.8	0.4	0.8	0.8	0.8	0.8	0.8	0.4	0.4	0.4	0.8
Soft silty clay	3	2 - 4	1.2	0.8	1.2	1.2	0.8	0.8	0.8	0.8	0.8	0.8	1.2
Stiff silty clay	6	4 - 8	1.6	1.2	1.6	2.0	1.2	1.6	2.0	1.2	1.2	1.6	2.0
Firm silty clay	11	7 - 15	2.4	2.0	2.4	2.8	2.4	2.8	3.2	1.6	2.0	2.4	2.8
Stiff silt	6	3 - 7	1.6	1.2	1.6	1.6	1.6	1.6	1.6	1.2	1.2	1.6	1.6
Stiff sandy silt	6	4 - 8	1.6	1.2	1.6	1.6	1.6	1.6	1.6	1.2	1.2	1.6	1.6
Stiff sandy clay	6	4 - 8	1.6	1.2	1.6	2.0	2.0	2.0	2.4	1.2	1.6	1.6	2.0
Silty sand	8	3 - 13	1.2	1.2	1.2	1.6	1.6	1.6	1.6	0.8	0.8	1.2	1.6
Clayey sand	13	6 - 20	2.0	1.6	2.0	2.8	2.4	2.4	2.8	1.6	2.0	2.4	2.8
Fine sand	15	8 - 22	2.4	2.0	2.4	2.8	2.4	2.8	3.2	1.6	2.0	2.4	2.8
Coarse sand	20	12 - 28	3.2	2.8	3.2	3.6	3.2	3.6	4.0	2.0	2.4	2.8	3.6
Gravelly sand	21	11 - 31	3.2	2.8	3.2	3.6	3.6	3.6	4.0	2.0	2.4	2.8	3.6
Granular material	> 40	---	(2)	4.0	4.8	5.6	(2)	(2)	(2)	(2)	(2)	(2)	(2)
Glacial Clay													
Firm silty glacial clay	11	7 - 15	2.8	2.4	2.8	3.2	2.8	3.2	3.6	2.0	2.4	2.4	3.2
Firm clay (gumbotil)	12	9 - 15	2.8	2.4	2.8	3.2	2.8	3.2	3.6	2.0	2.4	2.4	3.2
Firm glacial clay(1)	11	7 - 15	2.4 [3.2]	2.8 [3.2]	3.2 [4.0]	3.6 [4.4]	3.2 [4.0]	3.6 [4.4]	4.0 [4.8]	2.0 [2.4]	2.4 [2.8]	2.8 [3.2]	3.6 [4.4]
Firm sandy glacial clay(1)	13	9 - 15	2.4 [3.2]	2.8 [3.2]	3.2 [4.0]	3.6 [4.4]	3.2 [4.0]	3.6 [4.4]	4.0 [4.8]	2.0 [2.4]	2.4 [2.8]	2.8 [3.2]	3.6 [4.4]
Firm - very firm glacial clay(1)	14	11 - 17	2.8 [3.6]	2.8 [4.0]	3.2 [4.8]	3.6 [5.6]	4.0 [4.8]	4.4 [5.2]	4.8 [5.6]	2.4 [3.2]	2.8 [3.6]	3.2 [4.0]	4.0 [5.2]
Very firm glacial clay(1)	24	17 - 30	2.8 [3.6]	2.8 [4.0]	3.2 [4.8]	3.6 [5.6]	3.2 (3) [4.8]	3.6 (3) [5.6]	4.4 (3) [6.4]	2.4 [3.2]	2.8 [3.6]	3.2 [4.0]	4.0 [5.2]
Very firm sandy glacial clay(1)	25	15 - 30	3.2 [4.0]	2.8 [4.0]	3.2 [4.8]	3.6 [5.6]	3.2 (3) [4.8]	3.6 (3) [5.6]	4.4 (3) [6.4]	2.4 [3.2]	2.8 [3.6]	3.2 [4.0]	4.0 [5.2]
Cohesive or glacial material(1)	> 35	---	(2)	2.8 [4.0]	3.2 [4.8]	3.6 [5.6]	(2)	(2)	(2)	2.0 (4) [3.2]	2.4 (4) [4.0]	2.8 (4) [4.4]	3.6 (4) [5.6]

Table notes:

(1) **For double entries the upper value is for an embedded pile within 30 feet of the natural ground elevation, and the lower value [ ] is for pile depths more than 30 feet below the natural ground elevation.**

(2) Do not consider use of this pile type for this soil condition, wood with N > 25, prestressed concrete with N > 35, or steel pipe with N > 40.

(3) Prestressed concrete piles have proven to be difficult to drive in these soils. Prestressed piles should not be driven in glacial clay with consistent N > 30 to 35.

(4) Steel pipe piles should not be driven in soils with consistent N > 40.

Gener-alized Soil Category	Soil Classification Method	Soil Classification Method	Soil Classification Method	Soil Classification Method
	AASHTO	USDA Textural	BDM 6.2.7 Geotechnical Resistance Charts	BDM 6.2.7 Geotechnical Resistance Charts
Cohesive	A-4, A-5, A-6 and A-7	Clay Silty clay Silty clay loam Silt Clay loam Silt loam Loam Sandy clay	Loess	Very soft silty clay
				Soft silty clay
				Stiff silty clay
				Firm silty clay
				Stiff silt
				Stiff sandy clay
			Glacial Clay	Firm silty glacial clay
				Firm clay (gumbotil)
				Firm glacial clay
				Firm sandy glacial clay
				Firm-very firm glacial clay
				Very firm glacial clay
				Very firm sandy glacial clay
				Cohesive or glacial material
				Stiff sandy silt
				Silty sand

Non-Cohesive	A-1, A-2 and A-3	Sandy clay loam Sandy loam Loamy sand Sand	Alluvium Or Loess	Clayey sand
				Fine sand
				Coarse sand
				Gravely sand
				Granular material (N>40)

Track 2, Example 1-soil classification table [BDM Table 6.2.8]

Step 5 - Select resistance factor to estimate pile length based on the soil profile and construction control

In this step the engineer first characterizes the site as cohesive, mixed, or non-cohesive based on soil classification in the table and the soil profile.

Only the 9-foot Layer 2 of silty sand is classified as non-cohesive. The remainder of the profile is classified as cohesive, and most likely will represent more than 70% of the pile embedment length. Thus the soil is expected to fit the cohesive classification, and the resistance factor is selected from the choices below as 0.60 [BDM Table 6.2.9-1].

φ = **0.60 for cohesive** soil, averaged over the full depth of estimated pile penetration
φ = **0.60 for mixed** soil, averaged over the full depth of estimated pile penetration
φ = **0.50 for non-cohesive** soil, averaged over the full depth of estimated pile penetration

Step 6 - Calculate required nominal pile resistance, R_n
The required nominal pile resistance is:

$$R_n = (\sum \eta\gamma Q + \gamma_DD\ DD])/\varphi = (128 + 0)/0.60 = 213 \text{ kips/pile}$$

where,

$\sum \eta\gamma Q = \gamma Q = 128$ kips (Step 3)

$\gamma_{DD} DD = 0$ (no downdrag)

$\varphi = 0.60$ (Step 5)

Step 7 – Estimate contract pile length, L
Based on the nominal resistance values in Step 4, the cumulative nominal geotechnical resistance, $R_{n\text{-}BB}$, per pile is calculated as follows, where D = depth in feet below the bottom of footing.

$D_0 = 0$ ft, $R_{n\text{-}BB0} = 0$
$D_1 = 6$ ft, $R_{n\text{-}BB1} = R_{n\text{-}BB0} + (0.8 \text{ kips/ft})(6 \text{ ft}) = 4.8$ kips
$D_2 = 6 + 9 = 15$ ft, $R_{n\text{-}BB2} = R_{n\text{-}BB1} + (1.2 \text{ kips/ft})(9 \text{ ft}) = 4.8 + 10.8 = 15.6$ kips
$D_3 = 15 + 8 = 23$ ft, $R_{n\text{-}BB3} = R_{n\text{-}BB2} + (2.8 \text{ kips/ft})(8 \text{ ft}) = 15.6 + 22.4 = 38.0$ kips
$D_4 = 23 + 65 = 88$ ft, $R_{n\text{-}BB4} = R_{n\text{-}BB3} + (3.2 \text{ kips/ft})(65 \text{ ft}) = 38.0 + 208.0 = 246.0$ kips

A graphic presentation of the estimated nominal geotechnical resistance per pile versus depth is presented below.

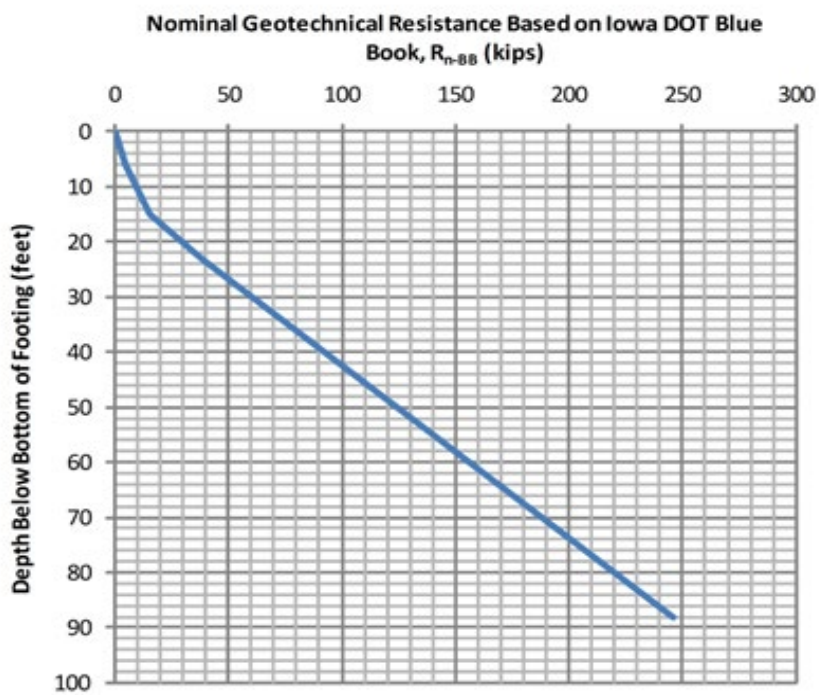

Track 2, Example 1-a plot of nominal geotechnical resistance versus depth

From the graph the depth below the footing necessary to achieve 213 kips is about 78 feet and may be computed as follows:

$D_L = 23 + (213-38.0)/3.2 = 78$ feet

The contract pile length includes a 2-foot embedment in the footing [BDM Table 6.2.5] and a 1-foot allowance for cutoff due to driving damage [BDM 6.2.4.2].

$L = 78 + 2 + 1 = 81$ feet

The length for steel H-piles is specified in 5-foot increments [BDM 6.2.4.2]. Therefore, the contract pile length is 80 feet, with 77 feet embedded.

At this point the embedded pile length is known, and it is necessary to check the resistance factor.

% cohesive soil = [(77-9)/77] (100) = 88% > 70%

Therefore, the resistance factor for cohesive soil is the correct choice.

The resistance factor, $\varphi = 0.60$, is confirmed for estimating the contract pile length. If the resistance factor were incorrect, the engineer would need to repeat Steps 6 and 7 (although in this example the mixed soil classification would not result in numerical changes).

Step 8 - Estimate target nominal pile driving resistance, $R_{ndr\text{-}T}$

The complete embedment length below the bottom of footing will contribute to pile driving resistance. In addition to the required embedment length to achieve the nominal pile resistance, driving resistance would need to be added if part of the embedment length had been ignored to account for downdrag load or scour. Since there was no need to make allowance for downdrag load or scour in this example, the pile embedment length below bottom of footing will be the same as that considered to estimate the required nominal pile resistance.

The soil embedment length is 77 feet, which is equal to the 80 foot contract pile length minus the 2 feet of embedment length in the concrete footing and 1-foot cutoff.

For a driven H-pile with construction control based on the Iowa DOT ENR Formula at EOD and no planned retap, the following resistance factor, φ, is recommended to estimate the target nominal pile driving resistance for cohesive soil [BDM Table 6.2.9-3].

φ_{TAR} = 0.55 for cohesive soil, averaged over the full depth of estimated pile penetration

The target pile driving resistance at End Of Drive (EOD) can be calculated as follows:

$$R_(ndr - T) = (\sum \text{▒}[\gamma Q + \gamma_DD\ DD])/\varphi_TAR = (128 + 0)/0.55 = 233 \text{ kips/pile}$$
$$= 117 \text{ tons/pile}$$

In Track 2, Example 1 in *Development of LRFD Procedures for Bridge Pile Foundations in Iowa – Volume IV: Design Guide and Track Examples* setup was included although the setup chart [BDM Figure 6.2.10] was developed for WEAP analysis only. Bureau policy is to consider setup only with H-piles in cohesive soils with WEAP construction control, and therefore setup should not be considered in this example.

It should be noted that construction control involving the Iowa DOT ENR Formula will require an increase in the target nominal driving resistance, $R_{ndr\text{-}T}$, over that required when a WEAP analysis is used for construction control. The target pile driving resistance at EOD here needed to

be increased from 166 kips/pile for WEAP analysis (Track 1, Example 1) to 233 kips/pile due to a reduction in the statistical reliability of the construction control.

Step 9 – Prepare CADD notes for the bridge plans
At this point the final design engineer selects the appropriate CADD note and adds the specific pile load values to the notes [BDM 13.8.2].

E818: Abutment piles, LRFD contract length and resistance

THE CONTRACT LENGTH OF 80 FEET FOR THE WEST ABUTMENT PILES IS BASED ON A COHESIVE SOIL CLASSIFICATION, A TOTAL FACTORED AXIAL LOAD PER PILE (P_U) OF 128 KIPS, AND A GEOTECHNICAL RESISTANCE FACTOR (PHI) OF 0.60.

THE NOMINAL AXIAL BEARING RESISTANCE FOR CONSTRUCTION CONTROL WAS DETERMINED FROM A COHESIVE SOIL CLASSIFICATION AND A GEOTECHNICAL RESISTANCE FACTOR (PHI) OF 0.55. PILES ARE ASSUMED TO BE DRIVEN FROM A START ELEVATION AT THE BOTTOM OF FOOTING.

E819: Abutment piles, driving and construction control

THE REQUIRED NOMINAL AXIAL BEARING RESISTANCE FOR WEST ABUTMENT PILES IS 117 TONS AT END OF DRIVE (EOD) OR RETAP. THE PILE CONTRACT LENGTH SHALL BE DRIVEN AS PER PLAN UNLESS PILES REACH REFUSAL. CONSTRUCTION CONTROL REQUIRES AN IOWA DOT ENR FORMULA.

Step 10 – Check the design
Policies for performing checks during design and after completion of design will vary among counties, cities, and engineering consultants.

END DESIGN PHASE

BEGIN CONSTRUCTION PHASE

Step 11 – Request and check contractor's hammer data
The Contractor requested the Engineer's approval for a DELMAG D19-42 single-acting diesel hammer to install the HP10×57 friction piles and supplied the following manufacturer's information.

DELMAG D19-42

Minimum rated energy = 22,721 foot-pounds (setting 1)
Maximum rated energy = 31,715 foot-pounds (setting 2)
Maximum rated energy = 37,868 foot-pounds (setting 3)
Maximum rated energy = 47,335 foot-pounds (setting 4)
Maximum obtainable stroke = 12.5 feet
Ram weight = 4,189 pounds = 2.095 tons
Drive anvil (cap) weight = 749 pounds = 0.375 tons
Hammer weight (including trip device) = 8,400 pounds
Hammer operating efficiency = 80 percent

Based on the Iowa DOT's *Standard Specifications for Highway and Bridge Construction, Series 2012,* Appendix Table 2501.03-1, the minimum energy required for diesel hammers with 66 to 90-foot long HP10×57 piling is 29,000 foot-pounds; and the maximum energy allowed for diesel hammers is 40,000 foot-pounds for up to 65 foot long piles. Based on this information, the DELMAG D19-42 hammer was accepted, provided that the hammer was operated at fuel settings 2 or 3 (not 1 or 4).

Step 12 - Observe construction, record driven resistance, and resolve any construction issues

At EOD at the contract plan length, the construction inspector records the hammer stroke and number of blows per foot of pile penetration. This information is used with the following Iowa DOT ENR Formula to estimate driving resistance. The formula in *Standard Specifications for Highway and Bridge Construction, Series 2012,* Article 2501.03, M, 2, a, has been modified below (and will be revised accordingly in 2013) to remove the factor of safety so that the formula indicates nominal resistance.

$$R_ndr = 12E/(S + 0.1) \times W/(W + M)$$

Where

R_{ndr} = nominal pile driving resistance, in tons.

W = weight of ram, in tons (unless the hammer has free fall, ram weight should be reduced IDOT SS 2501.03, M, 2, b, 1)).

M = weight of pile, drive cap (helmet, cushion, striker plate, and pile inserts if used), drive anvil, and follower (if applicable), in tons.

E = W x H = energy per blow, in foot-tons.

H = Hammer stroke, in feet.

S = average pile penetration in inches per blow for the last 10 blows.

12 = coefficient of 1 with feet-to-inch units conversion

For example, at EOD for the planned pile embedment length at an abutment pile, the construction inspector recorded a hammer stroke of 7-1/2 feet and a blow count of 31 blows/foot for the last foot of pile penetration.

Based on the guideline for the weight of ram in the Iowa DOT Standard Specifications noted above, the construction inspector reduced the weight of the ram to 4000 pounds or 2 tons. (The 189-pound reduction is an amount consistent with recent local practice. Note, however, the reduction recommended for WEAP analysis is 20%, which would amount to a larger, 838-pound reduction.)

For the D19-42 to drive HP10×57 piles,

Drive anvil weight = 749 pounds

Striker plate weight = 440 pounds

Helmet weight = 750 pounds

M = [(80 × 57) + 749 + 440 + 750] = 6,499 pounds = 3.25 tons

S = (1/31) (12 in/ft) = 0.39 inches/blow

$$\text{R_ndr} = 12WH/(S + 0.1) \times W/(W + M)$$
$$= (12)(2.00)(7.5)/((0.39 + 0.1)\,) \times ((2.00))/((2.00 + 3.25)\,)$$
$$= 180/0.49\ (0.38)$$

R_ndr = 140 tons > 117 tons, OK

(Considering the previous Iowa DOT ENR Formula that included a factor of safety of 4, R_{ndr} would equal 140/4 = 35 tons.)

Computations in Track 2, Example 1 in *Development of LRFD Procedures for Bridge Pile Foundations in Iowa – Volume IV: Design Guide and Track Examples* are based on an efficiency of 80% (20% reduction). There are a couple of errors in the driving computations, but they generally show that the reduced efficiency results in lower computed values for R_ndr and a need for retap of one of the abutment piles.

Track 2, Example 2

Driven Timber Pile in Non-Cohesive Soil with Construction Control Based on Iowa DOT ENR Formula and No Planned Retap

General design and construction steps to be modified for project conditions

Design Steps

Step 1 Develop bridge situation plan (or TS&L, Type, Size, and Location). (1)

Step 2 Develop soils package, including soil borings and foundation recommendations. (1)

Step 3 Determine pile layout, pile loads including downdrag, and other design requirements. (1) This step includes structural checks.

Step 4 Estimate nominal geotechnical resistance for friction and end bearing.

Step 5 Select resistance factor(s) to estimate pile length based on the soil profile and construction control.

Step 6 Calculate required nominal pile resistance, R_n .

Step 7 Estimate contract pile length, L, considering downdrag, scour, pile uplift, lateral loading, and unbraced length, if applicable.

Step 8 Estimate target nominal pile driving resistance, $R_{ndr\text{-}T}$.

Step 9 Prepare CADD notes for bridge plans.

Step 10 Check the design. (2)

Construction Steps

Step 11 Request and check contractor's hammer data, and prepare bearing graph for WEAP control or other necessary items for alternate methods of construction control.

Step 12 Observe construction, record driven resistance, and resolve any construction issues.

(1) These steps determine the basic information for geotechnical pile design and will vary depending on bridge project and Bureau practice.

(2) Checking will vary depending on bridge project and Bureau practice.

Within the Bridges and Structures Bureau at the Iowa DOT the design steps that determine the basic information necessary for design of a pile generally follow as indicated in Track 1, Example 1. Because Track 2 will not be used by the Iowa DOT this example simply gives the basic information for the design. That information would be determined in various ways depending on the bridge owner (county or city) and any involved engineering consultants. The process generally should not affect the overall design of the pile. Because counties and cities typically follow state standards, this example contains references to the Bridge Design Manual [BDM].

Step 1 - Develop bridge situation plan (or TS&L, Type, Size, and Location)

An engineer involved in the bridge project plots topographical information, locates the bridge, determines general type of superstructure, location of substructure units, elevations of foundations, hydraulic information (if needed), and other basic information to characterize the bridge. The engineer then prepares a TS&L sheet that shows a plan and longitudinal section of the bridge.

For this example for a non-state project, the TS&L gives the following information needed for design of the west abutment piles:

- 120-foot, three-span continuous concrete slab superstructure

- 30-foot roadway width
- 25-degree skew (custom designed, not a J-series bridge)
- Integral abutments which are standard practice for a bridge of this type and length [BDM 6.5.1.1.1]
- Pile foundation, no prebored holes (because the bridge length is less than 130 feet and there is no significant downdrag) [BDM 6.5.1.1.1]
- Bottom of west abutment footing elevation 922 feet

Step 2 - Develop soils information, including soil borings and foundation recommendations
Based on location of the abutments an engineer involved in the bridge project orders soil borings, typically at least one per substructure unit. When the engineer receives the boring logs he/she arranges for them to be plotted on a longitudinal section, checks any special geotechnical conditions on the site, and develops recommendations for foundation type with any applicable special design considerations.

Subsurface conditions at the abutment have been characterized based on a representative test boring. From the 922-foot elevation the abutment is underlain by 5 feet of soft to stiff silty clay ($N_a = 4$), 20 feet of fine sand ($N_a = 16$), 40 feet of medium sand ($N_a = 20$), and bouldery gravel and hard shale.

For this example, the recommendations are the following:

- Treated timber piles that tip out in the medium sand layer
- No significant downdrag
- Normal driving resistance
- No special site considerations for stability, settlement, or lateral movement (Therefore a Service I load will not be required for design.)
- Construction control based on the Iowa DOT ENR Formula (modified to remove factor of safety) with no planned retap

Step 3 - Determine pile layout, pile loads, and other design requirements. This step includes structural checks.
An engineer involved in the bridge project begins design of the abutment piles with the TS&L, boring logs, and foundation recommendations. The engineer selects treated timber piles for the county project.

There is no uplift, downdrag, or scour. Because the bridge characteristics fall within integral abutment policy, the site has no unusual characteristics, the soils design engineer did not require further analysis, and construction will not be accelerated or delayed, there will be no need for lateral load or special analysis of the abutment piles. They may simply be designed for vertical load.

Notation: The same loads are designated in Step 3 with “P” and in Steps 6 and 8 with “Q”.

For the west abutment

$$\Sigma\eta\gamma P + \gamma_{DD}DD = 565 + 0 = 565 \text{ kips} = P_u$$

Based on indeterminate bending stresses at an integral abutment the Bridge Design Manual

limits the nominal axial resistance for integral abutment piles. (A check of a typical pile cross section will give a larger nominal axial resistance.)

P_n = 64 kips [BDM 6.2.6.3]

The AASHTO LRFD Specifications give the following resistance factor for axial compression [AASHTO-LRFD 8.5.2.2]. The engineer chooses not to increase the factor for a "highly redundant foundation" [AASHTO-LRFD C8.5.2.2].

$\varphi = 0.90$

Required number of piles

$n = P_u/\varphi P_n = 565/(0.90)(64) = 9.81$, round to 10 piles

Each pile then must carry

$P_u = 565/10 = 56.5$ kips

The pile layout will be ten piles under the abutment plus one pile for each wing extension. (For the number of beams the designer checks the minimum number of piles, and for the abutment dimensions the designer checks the pile spacing guidelines [BDM 6.2.4.1]. Those checks are not shown here.) In this case the wing extension piles are added for abutment stability and are moderately loaded so they need not be checked for structural resistance.

Because the bridge characteristics fall within integral abutment policy, the site has no unusual characteristics, and construction will not be accelerated or delayed, there will be no need for lateral load or special analysis of the abutment piles. They may simply be designed for vertical load.

Step 4 - Estimate nominal geotechnical resistance per foot of pile embedment
Based on the west abutment soil boring and BDM Tables 6.2.7-1 and 6.2.7-2, the engineer estimates the following unit nominal resistances for end and friction bearing as shown in the table below.

Track 2, Example 2-estimated nominal geotechnical resistance

Soil Stratum	Soil Description	Stratum Thickness (ft)	Average SPT N Value (blows/ft)	Estimated Unit Nominal Resistance for Friction Pile (1), (2) (kips/ft)	Cumulative Nominal Friction Resistance at Bottom of Stratum (2) (kips)	Estimated Nominal Resistance for End Bearing (1), (2) (kips)
1	Soft to Stiff Silty Clay	5	4	1.4	7.0	---
2	Fine Sand	20	16	2.4	55.0	---
3	Medium Sand	40	20	2.8	167.0	32

(1) Because the soil categories and N-values do not fit the geotechnical resistance charts exactly there is some judgment involved in selecting and interpolating for these values.
(2) This information is used to prepare the calculations in Step 7.

Step 5 - Select a resistance factor to estimate pile length based on the soil profile and construction control

Only the 5-foot Layer 1 of soft to stiff silty clay is classified as cohesive. The remainder of the profile is classified as non-cohesive, and most likely will represent more than 70% of the pile embedment length. Thus the soil is expected to fit the non-cohesive classification, and the resistance factor is selected from the choices below as 0.50 [BDM Table 6.2.9-1].

φ = **0.60 for cohesive** soil, averaged over the full depth of estimated pile penetration
φ = **0.60 for mixed** soil, averaged over the full depth of estimated pile penetration
φ =**0.50 for non-cohesive** soil, averaged over the full depth of estimated pile penetration

Step 6 - Calculate required nominal pile resistance, R_n

The required nominal pile resistance is:

$$R_n = (\sum [\eta\gamma Q + \gamma_DD\ DD])/\varphi = (56.5 + 0)/0.50 = 113 \text{ kips/pile}$$

where,

$\sum \eta\gamma Q = \gamma Q = 56.5$ kips (Step 3)

$\gamma_{DD} DD = 0$ (no downdrag)

$\varphi = 0.50$ (Step 5)

The Blue Book, which summarized Iowa pile load tests, notes that in the majority of (static) load tests of timber piles, the piles yielded (began to settle more than the allowed amount) at no more than 75 tons (150 kips). The Blue Book also suggests that the "ultimate load" (nominal resistance) should not exceed 60 tons (120 kips) for short to medium piles. The required nominal resistance of 113 kips in this example is within that limit.

Step 7 – Estimate contract pile length, L

Based on the nominal resistance values in Step 4, the cumulative nominal geotechnical resistance, $R_{n\text{-}BB}$, per pile is calculated as follows, where D = depth in feet below the bottom of footing.

$D_0 = 0$ ft, $R_{n\text{-}BB0} = 0$
$D_1 = 5$ ft, $R_{n\text{-}BB1} = R_{n\text{-}BB0} + (1.4 \text{ kips/ft})(5 \text{ ft}) = 7.0$ kips
$D_2 = 5 + 20 = 25$ ft, $R_{n\text{-}BB2} = R_{n\text{-}BB1} + (2.4 \text{ kips/ft})(20 \text{ ft}) = 7.0 + 48.0 = 55.0$ kips
End bearing in Layer 3 = 32 kips, $R_{n\text{-}BB3} = R_{n\text{-}BB2} + 32 = 87.0$ kips
Required additional length in Layer 3 = (113.0 – 87.0)/2.8 = 9.3 feet, round to 9 feet
$D_4 = 25 + 9 = 34$ ft, $R_{n\text{-}BB4} = R_{n\text{-}BB3} + (2.8 \text{ kips/ft})(9 \text{ ft}) = 87.0 + 25.2$
$= 112.2 \text{ kips} \approx 113.0$ kips

The contract pile length includes a 2-foot embedment in the footing and a 1-foot allowance for cutoff due to driving damage.

$L = 34 + 2 + 1 = 37$ feet

The length for timber piles is specified in 5-foot increments [BDM 6.2.4.2]. Therefore, the

contract pile length is rounded to 35 feet.

At this point the embedded pile length is known, and it is necessary to check the site classification for the resistance factor.

% non-cohesive soil = [(32-5)/32] (100) = 84% > 70%

Therefore, φ = 0.50 is confirmed for estimating the contract pile length. If the resistance factor were incorrect, the engineer would need to repeat Steps 6 and 7 (and in this example the change to mixed soil classification would increase the resistance factor and result in a shorter pile).

Step 8 - Estimate target nominal pile driving resistance, $R_{ndr\text{-}T}$

The complete embedment length below the bottom of footing will contribute to pile driving resistance. In addition to the required embedment length to achieve the nominal pile resistance, driving resistance would need to be added if part of the embedment length had been ignored to account for downdrag load or scour. Since there was no need to make allowance for downdrag load or scour in this example, the pile embedment length below bottom of footing will be the same as that considered to estimate the required nominal pile resistance.

The soil embedment length is 32 feet, which is equal to the 35-foot contract pile length minus the 2 feet of embedment length in the concrete footing and 1-foot cutoff.

For a driven timber pile with construction control based on the Iowa DOT ENR Formula at EOD and no planned retap, the following resistance factor, φ, is recommended to estimate the target nominal pile driving resistance for cohesive soil [BDM Table 6.2.9-3, Table note (6)].

φ_{TAR} = 0.35 for all soil types

Therefore, the target nominal pile driving resistance can be calculated as follows:

$$R_(ndr - T) = (\sum \text{▒}[\![\gamma Q + \gamma_DD\ DD]\!])/\varphi_TAR = (56.5 + 0)/0.35 = 161 \text{ kips/pile} = 81 \text{ tons/pile}$$

It should be noted that construction control involving the Iowa DOT ENR Formula will require an increase in the target nominal driving resistance, $R_{ndr\text{-}T}$, over that required when a WEAP analysis is used for construction control. WEAP analysis would give (56.5 + 0) / 0.40 = 141 kips/pile or 71 tons/pile.

There also should be consideration of a driving limit less severe than the Iowa DOT definition of refusal, 160 blows/foot. The Iowa DOT has had a service driving limit of 40 tons to avoid overdriving [IDOT SS 2501.03, O, 2, c]. That limit with the Iowa DOT ENR Formula scales up to 160 tons. For one western Iowa bridge with soil conditions similar to this example, timber piles were driven to 40 tons or more, which was considered hard driving and, from the pile logs, seemed to be causing pile damage. At 40 tons formula-driven capacity, the penetration was about 0.22 inches per blow (or 55 blows/foot) for the last 10 blows. The number of blows per foot will vary based on several factors so 55 blows/foot is not necessarily an appropriate limit in all cases, and the Bureau now specifies a limit of 160 tons [BDM 6.2.6.3].

The Pile Driving Contractors Association (PDCA) has developed Specification 102-07, "Installation Specification for Driven Piles". C4.3.4 Practical Refusal states "In cases where the driving is easy until near the end of driving, a higher blow count may sometimes be satisfactory, but if a high blow count is required over a large percentage of the depth, even 10 blows per inch (or 120 blows/foot) may be too large. Blow counts greater than 10 blows per inch should be used

with care, particularly with concrete or timber piles."

Step 9 – Prepare CADD note for bridge plans
At this point the final design engineer selects the appropriate CADD notes and adds the specific pile values to the notes.

E818: Abutment piles, LRFD contract length and resistance

THE CONTRACT LENGTH OF 35 FEET FOR THE WEST ABUTMENT PILES IS BASED ON A NON-COHESIVE SOIL CLASSIFICATION, A TOTAL FACTORED AXIAL LOAD PER PILE (P_U) OF 56.5 KIPS, AND A GEOTECHNICAL RESISTANCE FACTOR (PHI) OF 0.50 FOR SOIL.

THE NOMINAL AXIAL BEARING RESISTANCE FOR CONSTRUCTION CONTROL WAS DETERMINED FROM A NON-COHESIVE SOIL CLASSIFICATION AND A GEOTECHNICAL RESISTANCE FACTOR (PHI) OF 0.35 FOR SOIL. PILES ARE ASSUMED TO BE DRIVEN FROM A START ELEVATION AT THE BOTTOM OF FOOTING.

E819: Abutment piles, driving and construction control

THE REQUIRED NOMINAL AXIAL BEARING RESISTANCE FOR WEST ABUTMENT PILES IS 81 TONS AT END OF DRIVE OR RETAP. THE PILE CONTRACT LENGTH SHALL BE DRIVEN AS PER PLAN UNLESS PILES REACH A DRIVING LIMIT OF 160 TONS. CONSTRUCTION CONTROL REQUIRES AN IOWA DOT ENR FORMULA.

Step 10 – Check the design
Policies for performing checks during design and after completion of design will vary among counties, cities, and engineering consultants.

END DESIGN PHASE

BEGIN CONSTRUCTION PHASE

Step 11 – Request and check contractor's hammer data
The Contractor requested the Engineer's approval for a DELMAG D19 single-acting diesel hammer to install the timber piles and supplied the following manufacturer's information.

<u>DELMAG D19-42</u>

Minimum rated energy = 22,721 foot-pounds (setting 1)
Maximum rated energy = 31,715 foot-pounds (setting 2)
Maximum rated energy = 37,868 foot-pounds (setting 3)
Maximum rated energy = 47,335 foot-pounds (setting 4)
Maximum obtainable stroke = 12.13 feet
Ram weight = 4,015 pounds = 2.007 tons
Drive anvil (cap) weight = 753 pounds = 0.377 tons
Driving cap weight = 1200 pounds = 0.60 tons
Hammer weight (including trip device) = 8,715 pounds
Hammer operating efficiency = 80 percent

Based on the Iowa DOT's *Standard Specifications for Highway and Bridge Construction, Series 2012,* Appendix Table 2501.03-1, the minimum energy required for diesel hammers with 35-foot long timber piling is 17,000 foot-pounds; and the maximum energy allowed for diesel hammers is 24,000 foot-pounds. Based on this information, the DELMAG D19 hammer was accepted at setting 1 (but not 2, 3, and 4). Note that gravity hammers can be used to install the timber piles. However, the minimum energy required for gravity hammers with 35-foot long timber piling is 15,000 foot-pounds; and the maximum energy allowed for gravity hammers is 25,000 foot-pounds.

Step 12 - Observe construction, record driven resistance, and resolve any construction issues

At EOD at the contract plan length, the construction inspector records the hammer stroke and number of blows per foot of pile penetration. This information is used with the following Iowa DOT ENR Formula to estimate driving resistance. The formula in *Standard Specifications for Highway and Bridge Construction, Series 2012,* Article 2501.03, M, 2, a, has been modified below (and will be revised accordingly in 2013) to remove the factor of safety so that the formula indicates nominal resistance.

$$R_ndr = 12E/(S + 0.1) \times W/(W + M)$$

Where

R_{ndr} = nominal pile driving resistance, in tons.

W = weight of ram, in tons (unless the hammer has free fall, ram weight should be reduced IDOT SS 2501.03, M, 2, b, 1)).

M = weight of pile, drive cap (helmet, cushion, striker plate, and pile inserts if used), drive anvil, and follower (if applicable), in tons.

E = W x H = energy per blow, in foot-tons.

H = Hammer stroke, in feet.

S = average pile penetration in inches per blow for the last 10 blows.

12 = coefficient of 1 with feet-to-inch units conversion

For example, at EOD for the planned pile embedment length at Pile 1 in the Log of Piling Driven (not copied for this example), the construction inspector recorded a hammer stroke of 7-1/2 feet and a blow count of 20 blows/foot for the last foot of pile penetration.

Based on the guideline for the weight of ram in the Iowa DOT Standard Specifications noted above, the construction inspector reduced the weight of the ram to 3800 pounds or 1.90 tons. (The 215-pound reduction is an amount consistent with recent local practice. Note however, the reduction recommended for WEAP analysis is 20%, which would amount to a larger, 803-pound reduction.)

The construction inspector used the formula to calculate a driving resistance of 133 tons as indicated below, which is greater than the target driving resistance of 81 tons.

W = 4015 - 215 = 3800 pounds or 1.90 tons

M = pile + cap + anvil = (1246 + 1200 + 753) /2000 = 1.60 tons

S = (1/20) (12 in/ft) = 0.60 inches/blow

$$R_ndr = 12WH/(S + 0.1) \times W/(W + M)$$
$$= (12)(1.90)(7.5)/((0.60 + 0.1)\ ) \times 1.90/((1.90 + 1.60)\ )$$

= 133 tons > 81tons, OK

(Considering the previous Iowa DOT ENR Formula that included a factor of safety of 4, R_{ndr} would equal 133/4 = 33 tons, more than the 20 tons required and therefore acceptable. Note that the required resistance is achieved by about the same overage factor for both LRFD and ASD. In this case then, under LRFD, it would require about the same blows per foot to achieve bearing as in the past.)

Track 3, Example 1

Driven H-Pile in Cohesive Soil with Construction Control Based on PDA/CAPWAP and Wave Equation with No Planned Retap

General design and construction steps to be modified for project conditions

Design Steps

Step 1 Develop bridge situation plan (or TS&L, Type, Size, and Location). (1)

Step 2 Develop soils package, including soil borings and foundation recommendations. (1)

Step 3 Determine pile layout, pile loads including downdrag, and other design requirements. (1) This step includes structural checks.

Step 4 Estimate nominal geotechnical resistance for friction and end bearing.

Step 5 Select resistance factor(s) to estimate pile length based on the soil profile and construction control.

Step 6 Calculate required nominal pile resistance, R_n .

Step 7 Estimate contract pile length, L, considering downdrag, scour, pile uplift, lateral loading, and unbraced length, if applicable.

Step 8 Estimate target nominal pile driving resistance, $R_{ndr\text{-}T}$.

Step 9 Prepare CADD notes for bridge plans.

Step 10 Check the design. (2)

Construction Steps

Step 11 Request and check contractor's hammer data, and prepare bearing graph for WEAP control or other necessary items for alternate methods of construction control.

Step 12 Observe construction, record driven resistance, and resolve any construction issues.

(1) These steps determine the basic information for geotechnical pile design and will vary depending on bridge project and Bureau practice.

(2) Checking will vary depending on bridge project and Bureau practice.

Within the Bridges and Structures Bureau at the Iowa DOT the design steps that determine the basic information necessary for design of a steel H-pile generally follow as indicated in Steps 1-3. The steps involve communication among the preliminary design engineer, soils design engineer, and final design engineer. In other organizations the basic information may be determined differently, but that process generally should not affect the overall design of the pile.

Step 1 - Develop bridge situation plan (or TS&L, Type, Size, and Location)

For a typical bridge the preliminary design engineer plots topographical information, locates the bridge, determines general type of superstructure, location of substructure units, elevations of foundations, hydraulic information (if needed), and other basic information to characterize the bridge. The preliminary design engineer then prepares a TS&L sheet that shows a plan and longitudinal section of the bridge.

For this example for a state project with special construction control, the TS&L gives the following information needed for design of abutment piles:

- 120-foot single span, prestressed concrete beam superstructure
- Zero skew

- Integral abutments (because these are standard practice for non-skewed concrete bridges less than 575 feet in length with end or single spans not exceeding the length of standard prestressed concrete beams) [BDM 6.5.1.1.1]
- Pile foundations, no prebored holes (because the bridge length is less than 130 feet) [BDM 6.5.1.1.1]
- Bottom of abutment footing elevation 433 feet

Step 2 - Develop soils package, including soil borings and foundation recommendations
Based on location of the abutments the soils design engineer orders soil borings, typically at least one per substructure unit. When the engineer receives the boring logs he/she arranges for them to be plotted on a longitudinal section, checks any special geotechnical conditions on the site, and writes a recommendation for foundation type with any applicable special design considerations.

For this example, the soils design engineer recommends the following:

- Friction piles that tip out in the firm glacial clay layer
- Steel H-piles for the integral abutments
- Structural Resistance Level – 1 (which does not require a driving analysis by the Construction and Materials Bureau during design [BDM 6.2.6.1])
- Normal driving resistance (This will lead to $\varphi_c = 0.60$ for the structural check.)
- No special site considerations for stability, settlement, or lateral movement (Therefore the Service I load will not be required for design.)
- Construction control based on PDA/CAPWAP and wave equation with no planned retap

The soil profile shown below includes the following soil boring at the west abutment. Generally below the bottom of footing elevation there are three layers: 6 feet of soft silty clay, 9 feet of silty sand, and firm glacial clay to the bottom of the boring at 95 feet. Layer 3 is subdivided at a depth of 30 feet because of a step-increase in nominal friction resistance at that elevation [BDM Table 6.2.7-2]. No groundwater was encountered in the boring.

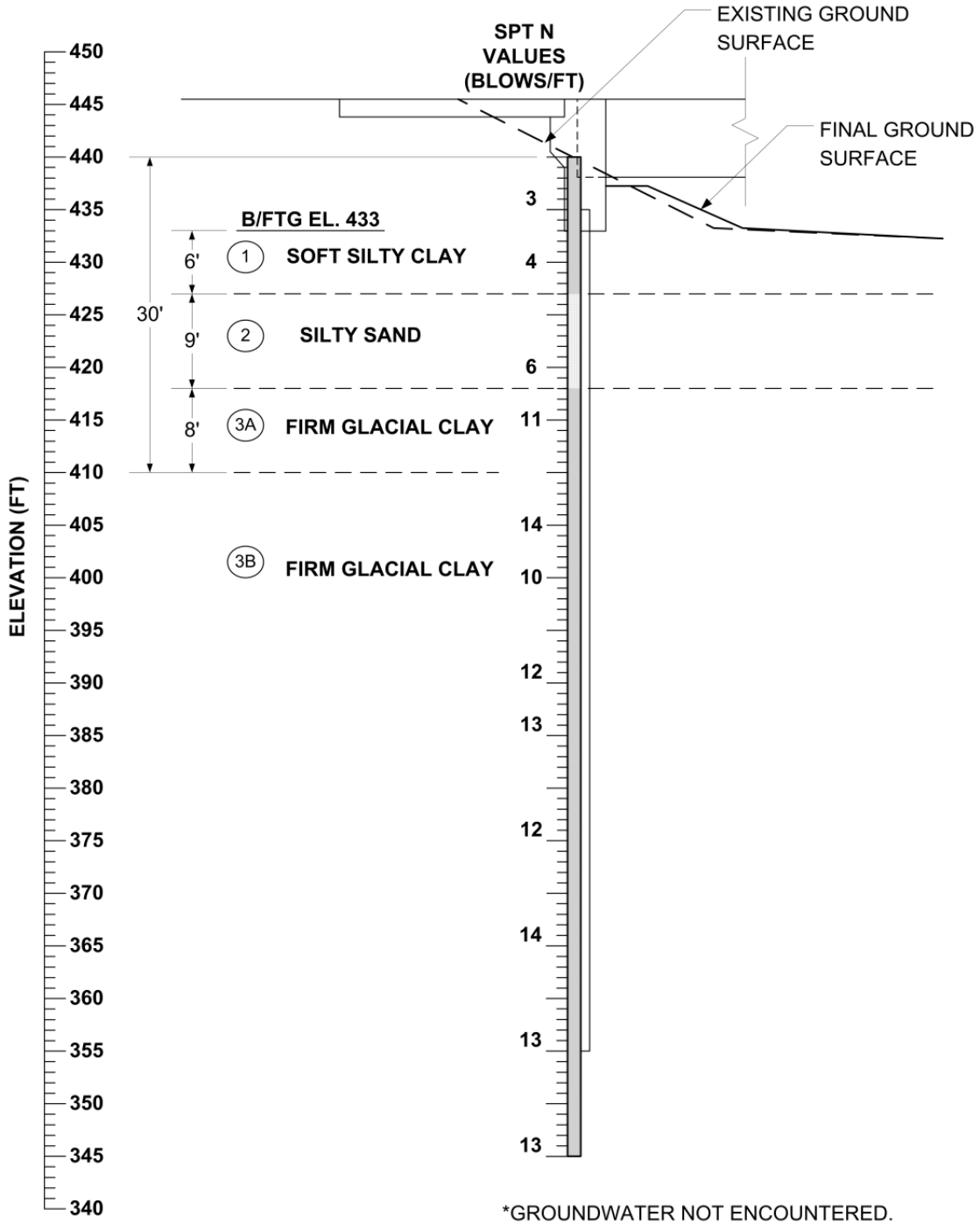

Track 3, Example 1-soil profile at west abutment

Step 3 - Determine pile layout, pile loads, and other design requirements. This step includes structural checks.

The final design engineer begins design of the abutment piles with the TS&L and the soils design package. Because the bridge has a prestressed concrete beam superstructure and integral abutments the engineer selects HP 10×57 piles, following Bridge Design Manual policy [BDM 6.5.1.1.1].

There is no uplift, downdrag, or scour. Because the bridge characteristics fall within integral abutment policy, the site has no unusual characteristics, the soils design engineer did not require further analysis, and construction will not be accelerated or delayed, there will be no need for lateral load or special analysis of the abutment piles. They may simply be designed for vertical load.

Notation: The same loads are designated in Step 3 with "P" and in Steps 6 and 8 with "Q".

For the west abutment

$$\Sigma\eta\gamma P + \gamma_{DD}DD = 895 + 0 = 895 \text{ kips} = P_u$$

The soils package indicates normal driving resistance, therefore

$$\varphi_c = 0.60$$

The soils engineer recommends SRL-1 for which

$$P_n = 243 \text{ kips [BDM Table 6.2.6.1-1]}$$

Considering the TS&L and other project factors the final design engineer selects BTC beams [BDM Table 5.4.1.1.1]. For integral abutments with BTC beams and prebored holes for the piles, the maximum P_n = 365 kips [BDM Table 6.5.1.1.1-1]. With the short span, the prebored holes are not necessary and, for this project, 365 kips would be the limit per integral abutment pile. The SRL-1 value controls, however.

Required number of piles

$$n = P_u/\varphi P_n = 895/(0.60)(243) = 6.14, \text{ round to 7 piles}$$

Each pile then must carry

$$P_u = 895/7 = 128 \text{ kips}$$

The pile layout will be seven piles under the abutment plus one pile for each wing extension as shown below. (For the number of beams the designer checks the minimum number of piles, and for the abutment dimensions the designer checks the pile spacing guidelines [BDM 6.2.4.1]. Those checks are not shown here.) In this case the wing extension piles are added for abutment stability and are moderately loaded so they need not be checked for structural resistance.

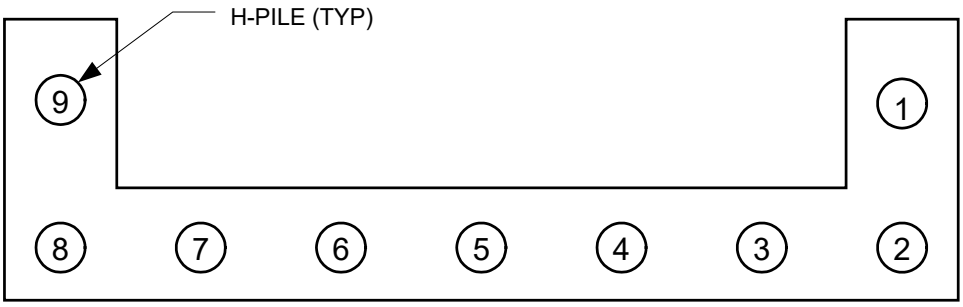

Track 3, Example 1-pile layout at west abutment

Step 4 - Estimate nominal geotechnical resistance for friction
Based on the west abutment soil boring and BDM Table 6.2.7-2, the final design engineer estimates the following nominal unit resistances for friction bearing.

Track 3, Example 1-estimated nominal unit geotechnical resistance

Soil Stratum	Soil Description		Stratum Thickness (ft)	Average SPT N Value (blows/ft)	Estimated Unit Nominal Resistance for Friction Pile (kips/ft)
1	Soft Silty Clay		6	4	0.8
2	Silty Sand		9	6	1.2
3A	Firm Glacial Clay	within 30 feet of natural ground elevation	8	11	2.8
3B		more than 30 feet below natural ground elevation	65	12	3.2

The firm glacial clay stratum has been divided into two parts, to delineate the embedded pile length that is within 30 feet of the natural ground surface as noted in the BDM geotechnical resistance chart [BDM Table 6.2.7-2]. Application of the chart to estimate the nominal resistance values is illustrated on the next page. Note that the SPT N values are too small for use of end bearing in Layer 3B [BDM Table 6.2.7-1].

Track 3, Example 1-BDM geotechnical resistance chart [BDM Table 6.2.7-2]

SOIL DESCRIPTION	BLOW COUNT		ESTIMATED NOMINAL RESISTANCE VALUES FOR FRICTION PILE IN KIPS PER FOOT										
	N-VALUE		WOOD	STEEL "H"			PRESTRESSED			STEEL PIPE			
	MEAN	RANGE	PILE	10	12	14	12	14	16	10	12	14	18
Alluvium or Loess													
Very soft silty clay	1	0 - 1	0.8	0.4	0.8	0.8	0.8	0.8	0.8	0.4	0.4	0.4	0.8
Soft silty clay	3	2 - 4	1.2	0.8	1.2	1.2	0.8	0.8	0.8	0.8	0.8	0.8	1.2
Stiff silty clay	6	4 - 8	1.6	1.2	1.6	2.0	1.2	1.6	2.0	1.2	1.2	1.6	2.0
Firm silty clay	11	7 - 15	2.4	2.0	2.4	2.8	2.4	2.8	3.2	1.6	2.0	2.4	2.8
Stiff silt	6	3 - 7	1.6	1.2	1.6	1.6	1.6	1.6	1.6	1.2	1.2	1.6	1.6
Stiff sandy silt	6	4 - 8	1.6	1.2	1.6	1.6	1.6	1.6	1.6	1.2	1.2	1.6	1.6
Stiff sandy clay	6	4 - 8	1.6	1.2	1.6	2.0	2.0	2.0	2.4	1.2	1.6	1.6	2.0
Silty sand	8	3 - 13	1.2	1.2	1.2	1.6	1.6	1.6	1.6	0.8	0.8	1.2	1.6
Clayey sand	13	6 - 20	2.0	1.6	2.0	2.8	2.4	2.4	2.8	1.6	2.0	2.4	2.8
Fine sand	15	8 - 22	2.4	2.0	2.4	2.8	2.4	2.8	3.2	1.6	2.0	2.4	2.8
Coarse sand	20	12 - 28	3.2	2.8	3.2	3.6	3.2	3.6	4.0	2.0	2.4	2.8	3.6
Gravelly sand	21	11 - 31	3.2	2.8	3.2	3.6	3.6	3.6	4.0	2.0	2.4	2.8	3.6
Granular material	> 40	---	(2)	4.0	4.8	5.6	(2)	(2)	(2)	(2)	(2)	(2)	(2)
Glacial Clay													
Firm silty glacial clay	11	7 - 15	2.8	2.4	2.8	3.2	2.8	3.2	3.6	2.0	2.4	2.4	3.2
Firm clay (gumbotil)	12	9 - 15	2.8	2.4	2.8	3.2	2.8	3.2	3.6	2.0	2.4	2.4	3.2
Firm glacial clay(1)	11	7 - 15	2.4 [3.2]	2.8 [3.2]	3.2 [4.0]	3.6 [4.4]	3.2 [4.0]	3.6 [4.4	4.0 [4.8]	2.0 [2.4]	2.4 [2.8]	2.8 [3.2]	3.6 [4.4]
Firm sandy glacial clay(1)	13	9 - 15	2.4 [3.2]	2.8 [3.2]	3.2 [4.0]	3.6 [4.4]	3.2 [4.0]	3.6 [4.4	4.0 [4.8]	2.0 [2.4]	2.4 [2.8]	2.8 [3.2]	3.6 [4.4]
Firm - very firm glacial clay(1)	14	11 - 17	2.8 [3.6]	2.8 [4.0]	3.2 [4.8]	3.6 [5.6]	4.0 [4.8]	4.4 [5.2	4.8 [5.6]	2.4 [3.2]	2.8 [3.6]	3.2 [4.0]	4.0 [5.2]
Very firm glacial clay(1)	24	17 - 30	2.8 [3.6]	2.8 [4.0]	3.2 [4.8]	3.6 [5.6]	3.2 (3) [4.8]	3.6 (3) [5.6]	4.4 (3) [6.4]	2.4 [3.2]	2.8 [3.6]	3.2 [4.0]	4.0 [5.2]
Very firm sandy glacial clay(1)	25	15 - 30	3.2 [4.0]	2.8 [4.0]	3.2 [4.8]	3.6 [5.6]	3.2 (3) [4.8]	3.6 (3) [5.6]	4.4 (3) [6.4]	2.4 [3.2]	2.8 [3.6]	3.2 [4.0]	4.0 [5.2]
Cohesive or glacial material(1)	> 35	---	(2)	2.8 [4.0]	3.2 [4.8]	3.6 [5.6]	(2)	(2)	(2)	2.0 (4) [3.2]	2.4 (4) [4.0]	2.8 (4) [4.4]	3.6 (4) [5.6]

Table notes:

(1) For double entries the upper value is for an embedded pile within 30 feet of the natural ground elevation, and the lower value [ ] is for pile depths more than 30 feet below the natural ground elevation.

(2) Do not consider use of this pile type for this soil condition, wood with N > 25, prestressed concrete with N > 35, or steel pipe with N > 40.

(3) Prestressed concrete piles have proven to be difficult to drive in these soils. Prestressed piles should not be driven in glacial clay with consistent N > 30 to 35.

(4) Steel pipe piles should not be driven in soils with consistent N > 40.

Gener-alized Soil Category	Soil Classification Method	Soil Classification Method	Soil Classification Method	Soil Classification Method
#	**AASHTO**	**USDA Textural**	**BDM 6.2.7 Geotechnical Resistance Charts**	**BDM 6.2.7 Geotechnical Resistance Charts**
Cohesive	A-4, A-5, A-6 and A-7	Clay Silty clay Silty clay loam Silt Clay loam Silt loam Loam Sandy clay	Loess	Very soft silty clay
				Soft silty clay
				Stiff silty clay
				Firm silty clay
				Stiff silt
				Stiff sandy clay
			Glacial Clay	Firm silty glacial clay
				Firm clay (gumbotil)
				Firm glacial clay
				Firm sandy glacial clay
				Firm-very firm glacial clay
				Very firm glacial clay
				Very firm sandy glacial clay
				Cohesive or glacial material
				Stiff sandy silt
				Silty sand
				Clayey sand

Non-Cohesive	A-1, A-2 and A-3 Sandy clay loam Sandy loam	Loamy sand Sand	Alluvium Or Loess	Fine sand
				Coarse sand
				Gravely sand
				Granular material (N>40)

Step 5 - Select resistance factor to estimate pile length based on the soil profile and construction control

In this step the final design engineer first characterizes the site as cohesive, mixed, or non-cohesive based on soil classification in the table below and the soil profile.

Track 3, Example 1-soil classification table [BDM Table 6.2.8]

Only the 9-foot Layer 2 of silty sand is classified as non-cohesive. The remainder of the profile is classified as cohesive, and most likely will represent more than 70% of the pile embedment length. Thus the soil is expected to fit the cohesive classification, and the resistance factor selection from the three available choices below is 0.70 [BDM Table 6.2.9-1].

φ = 0.70 for cohesive soil, averaged over the full depth of estimated pile penetration
φ = 0.70 for mixed soil, averaged over the full depth of estimated pile penetration
φ = 0.60 for non-cohesive soil, averaged over the full depth of estimated pile penetration

Step 6 - Calculate the required nominal pile resistance, R_n
The required nominal pile resistance is:

$$R_n = (\sum [\eta\gamma Q + \gamma_DD\ DD])/\varphi = (128 + 0)/0.70 = 183 \text{ kips/pile}$$

where,

$\sum \eta\gamma Q = \gamma Q = 128$ kips (Step 3)

$\gamma_{DD} DD = 0$ (no downdrag)

$\varphi = 0.70$ (Step 5)

Step 7 – Estimate contract pile length, L
Based on the nominal resistance values in Step 4, the cumulative nominal geotechnical resistance, $R_{n\text{-}BB}$, per pile is calculated as follows, where D = depth in feet below the bottom of footing.

$D_0 = 0$ ft, $R_{n\text{-}BB0} = 0$
$D_1 = 6$ ft, $R_{n\text{-}BB1} = R_{n\text{-}BB0} + (0.8 \text{ kips/ft})(6 \text{ ft}) = 4.8$ kips
$D_2 = 6 + 9 = 15$ ft, $R_{n\text{-}BB2} = R_{n\text{-}BB1} + (1.2 \text{ kips/ft})(9 \text{ ft}) = 4.8 + 10.8 = 15.6$ kips
$D_3 = 15 + 8 = 23$ ft, $R_{n\text{-}BB3} = R_{n\text{-}BB2} + (2.8 \text{ kips/ft})(8 \text{ ft}) = 15.6 + 22.4 = 38.0$ kips
$D_4 = 23 + 65 = 88$ ft, $R_{n\text{-}BB4} = R_{n\text{-}BB3} + (3.2 \text{ kips/ft})(65 \text{ ft}) = 38.0 + 208.0 = 246.0$ kips
(The 246.0 kips is for graphing purposes only and exceeds the required nominal resistance of a pile.)

A graphic presentation of the estimated nominal geotechnical resistance per pile versus depth is presented below.

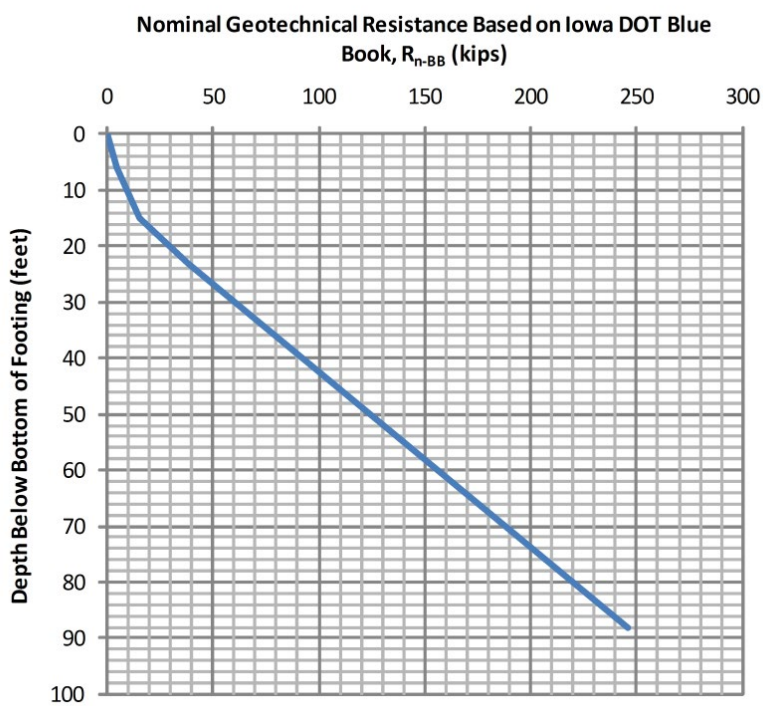

Track 3, Example 1-a plot of nominal geotechnical resistance versus depth

From the graph the depth below the footing necessary to achieve 183 kips is about 68 feet and may be computed as follows:

$D_L = 23 + (183-38.0)/3.2 = 68$ feet

The contract pile length includes a 2-foot embedment in the footing [BDM Table 6.2.5] and a 1-foot allowance for cutoff due to driving damage [BDM 6.2.4.2].

$L = 68 + 2 + 1 = 71$ feet

The length for steel H-piles is specified in 5-foot increments [BDM 6.2.4.2]. Therefore, the contract pile length is 70 feet, with 67 feet embedded.

At this point the embedded pile length is known, and it is necessary to check the for resistance factor.

% cohesive soil = [(67-9)/67] (100) = 87% > 70%

Therefore, the resistance factor for cohesive soil is the correct choice. If the resistance factor were incorrect, the engineer would need to repeat Steps 6 and 7 (although in this example the mixed soil classification would not result in numerical changes).

Step 8 - Estimate target nominal pile driving resistance, $R_{ndr\text{-}T}$

For a driven H-pile with no planned retap and use of PDA/CAPWAP and WEAP analysis for construction control, the following resistance factors, φ, are recommended to estimate the target nominal pile driving resistance [BDM Table 6.2.9-3].

φ_{EOD} = 0.75 for cohesive soil, averaged over the full depth of estimated pile penetration
φ_{SETUP} = 0.40 for cohesive soil, averaged over the full depth of estimated pile penetration
φ = 0.70 for mixed soil, averaged over the full depth of estimated pile penetration
φ = 0.70 for non-cohesive soil, averaged over the full depth of estimated pile penetration

For a normal construction schedule, pile setup at one day is the most appropriate choice. Therefore, the nominal pile resistance during construction, R_n, will be determined at end of drive by scaling back setup gain, and then adjusting retaps to account for setup.

$\Sigma\eta\gamma Q + \gamma_{DD}DD \leq \varphi R_n$ where η = load modifier = 1.0 from BDM 6.2.3.1

Let $R_n = R_T$ = nominal pile resistance at time T (days) after EOD.

$$R_EOD \geq (\sum \eta\gamma Q + \gamma_DD\ DD)/(\varphi_EOD + \varphi_SETUP\ (F_SETUP - 1))$$

where,

$\Sigma\eta\gamma Q = \gamma Q = 128$ kips, (Step 2)

$\gamma_{DD}DD = 0$ (no downdrag)

F_{SETUP} = Setup Ratio = R_T/R_{EOD}

To determine the setup ratio the soil profile was used to calculate the average SPT N-value for <u>cohesive</u> soil penetrated by the driven pile over the contract pile length, as follows.

Calculated average SPT N-value = [(6′)(4) + (8′)(11) + (67′-23′)(12)]/(67′-9′) = 11

The average SPT N-value of 11 yields a Setup Ratio, F_{SETUP}, of 1.61 for 1-day retap, 1.55 for 3-dat retap, and 1.61 for 7-day retap from the graph shown below [BDM Figure 6.2.10].

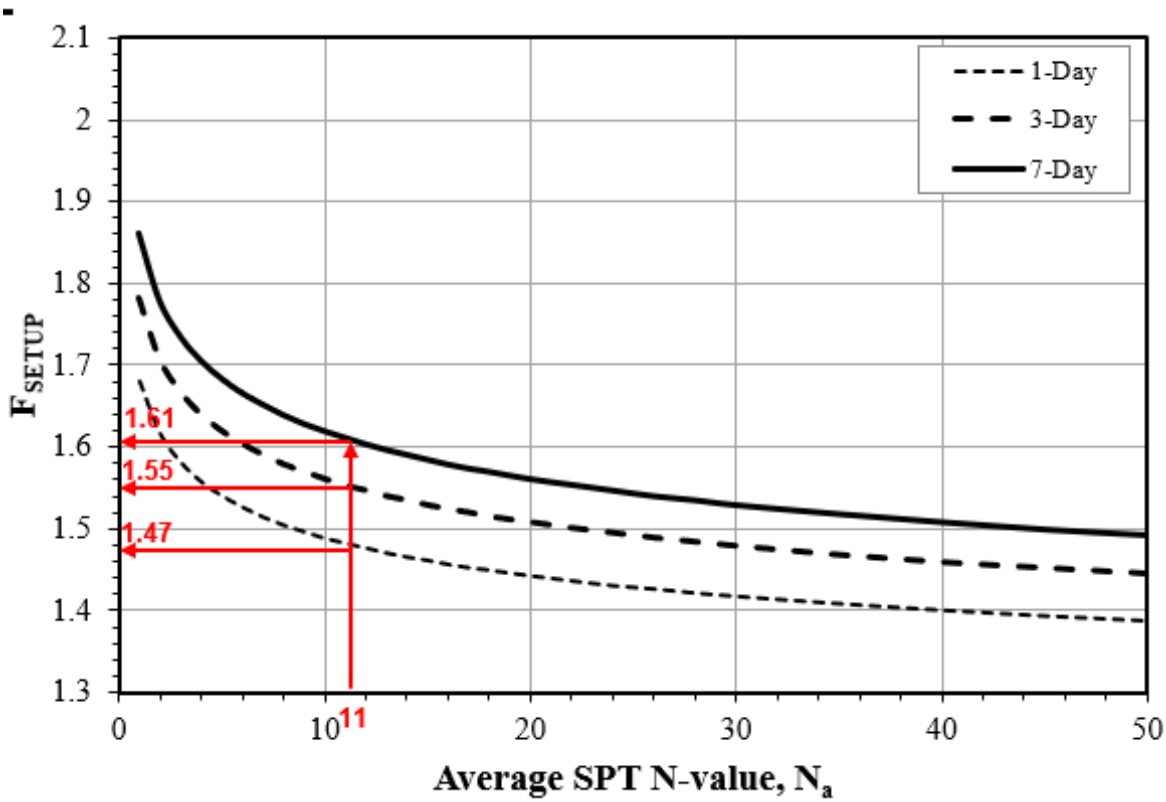

Track 3, Example 1-pile setup factor chart [BDM Figure 6.2.10]

Let φ_{TAR} = Resistance factor for target nominal resistance ≤ 1.00

$= \varphi_EOD + \varphi_SETUP\ (F_SETUP - 1)$

and $R_{ndr\text{-}T} = R_{EOD}$

The target pile driving resistance at End Of Drive is

$$R_(ndr - T) = R_EOD$$

$$\geq (\sum [\![\eta\gamma Q + \gamma_DD\ DD]\!])/\varphi_TAR$$

$$\geq (\sum [\![\eta\gamma Q + \gamma_DD\ DD]\!])/(\varphi_EOD + \varphi_SETUP\ (F_SETUP - 1)\ )$$

$$\geq (128 + 0)/((0.75) + (0.40)(1.61 - 1)\ ) = 128/0.99$$

= 129 kips/pile = 65 tons/pile

Note that $\varphi_{TAR} < 1.00$, OK

The target nominal geotechnical resistance at 1-day retap then is:

$R_{1\text{-}day}$ = (129.0)(1.47) = 189.6 kips = 95 tons, but not more than $R_(ndr - T)$ computed with φ_{EOD} , not considering setup.

$R_{1\text{-}day} \leq (128 + 0)/0.75 = 170.7$ kips = 85 tons

The 85 tons controls and also will control 3-day and 7-day retaps (which otherwise would be 100 tons and 104 tons, respectively).

Step 9 – Prepare CADD notes for the bridge plans
At this point the final design engineer selects the appropriate CADD note and adds the specific pile load values to the notes [BDM 13.8.2].

E818: Abutment piles, LRFD contract length and resistance

THE CONTRACT LENGTH OF 70 FEET FOR THE WEST ABUTMENT PILES IS BASED ON A COHESIVE SOIL CLASSIFICATION, A TOTAL FACTORED AXIAL LOAD PER PILE (P_U) OF 128 KIPS, AND A GEOTECHNICAL RESISTANCE FACTOR (PHI) OF 0.75.

THE NOMINAL AXIAL BEARING RESISTANCE FOR CONSTRUCTION CONTROL WAS DETERMINED FROM A COHESIVE SOIL CLASSIFICATION AND A GEOTECHNICAL RESISTANCE FACTOR (PHI) OF 0.99. PILES ARE ASSUMED TO BE DRIVEN FROM A START ELEVATION AT THE BOTTOM OF FOOTING.

E819: Abutment piles, driving and construction control

THE REQUIRED NOMINAL AXIAL BEARING RESISTANCE FOR WEST ABUTMENT PILES IS 65 TONS AT END OF DRIVE. IF RETAPS ARE NECESSARY TO ACHIEVE BEARING, THE REQUIRED NOMINAL AXIAL BEARING RESISTANCE IS 85 TONS AT ONE-DAY OR LATER RETAPS. THE PILE CONTRACT LENGTH SHALL BE DRIVEN AS PER PLAN UNLESS PILES REACH REFUSAL. CONSTRUCTION CONTROL REQUIRES PDA/CAPWAP AND A WEAP ANALYSIS WITH BEARING GRAPH.

Step 10 – Check the design
Within the Bridges and Structures Bureau at the Iowa DOT a final design engineer other than the bridge designer is assigned to give the bridge design an independent check at the time final plans are complete. During the checking process a final design engineer will review the soils package to ensure that all recommendations were followed and also will check structural, geotechnical, and drivability aspects of the design.

Other design organizations may perform checks at various stages of design rather than upon plan completion.

END DESIGN PHASE

BEGIN CONSTRUCTION PHASE

Step 11 – Request and check contractor's hammer data, and prepare bearing graph
After the bridge contract is let and prior to start of pile driving, the contractor completes Hammer Data sheets for the pile driving hammer that he/she plans to use. The Hammer Data sheets include all pertinent information including the cap (helmet) number and hammer identification information with details, hammer cushion, and pile cushion (where required), as well as pile size, pile length, and estimated pile driving resistance. The Construction and Materials Bureau uses the data received to complete a WEAP analysis for construction control during pile driving. Results from the WEAP analysis are then used to prepare an LRFD Bearing Graph (without the factor of safety used for allowable stress design). The Bearing Graph includes curves of nominal driving resistance versus blows per foot, and identifies specific driving conditions, where driving stress is a concern.

Step 12 - Observe construction, record driven resistance, and resolve any construction issues

During pile driving, the construction inspector performs PDA analysis with CAPWAP signal processing. Pile stress and movement are monitored, and driving resistance is calculated in real time to verify that the pile reaches target driving resistance. The construction inspector enters the EOD information on the driving log.

If the recorded pile driving resistance at EOD is less than the target pile nominal driving resistance, the pile is retapped with PDA/CAPWAP about 24 hours after EOD. (The retap is a remedial measure that makes use of setup for an individual pile. If the 24-hour retap does not indicate enough driven resistance, an extension will be added the same day rather than wait to retap another day.)

Track 3, Example 2

Driven H-Pile in Cohesive Soil and Construction Control Based on Wave Equation and Planned Retap at 3 Days

General design and construction steps to be modified for project conditions

Design Steps

Step 1 Develop bridge situation plan (or TS&L, Type, Size, and Location). (1)

Step 2 Develop soils package, including soil borings and foundation recommendations. (1)

Step 3 Determine pile layout, pile loads including downdrag, and other design requirements. (1) This step includes structural checks.

Step 4 Estimate nominal geotechnical resistance for friction and end bearing.

Step 5 Select resistance factor(s) to estimate pile length based on the soil profile and construction control.

Step 6 Calculate required nominal pile resistance, R_n .

Step 7 Estimate contract pile length, L, considering downdrag, scour, pile uplift, lateral loading, and unbraced length, if applicable.

Step 8 Estimate target nominal pile driving resistance, $R_{ndr\text{-}T}$.

Step 9 Prepare CADD notes for bridge plans.

Step 10 Check the design. (2)

Construction Steps

Step 11 Request and check contractor's hammer data, and prepare bearing graph for WEAP control or other necessary items for alternate methods of construction control.

Step 12 Observe construction, record driven resistance, and resolve any construction issues.

(1) These steps determine the basic information for geotechnical pile design and will vary depending on bridge project and Bureau practice.

(2) Checking will vary depending on bridge project and Bureau practice.

Within the Bridges and Structures Bureau at the Iowa DOT the design steps that determine the basic information necessary for design of a steel H-pile generally follow as indicated in Steps 1-3. The steps involve communication among the preliminary design engineer, soils design engineer, and final design engineer. In other organizations the basic information may be determined differently, but that process generally should not affect the overall design of the pile.

Step 1 - Develop bridge situation plan (or TS&L, Type, Size, and Location)

For a typical bridge the preliminary design engineer plots topographical information, locates the bridge, determines general type of superstructure, location of substructure units, elevations of foundations, hydraulic information (if needed), and other basic information to characterize the bridge. The preliminary design engineer then prepares a TS&L sheet that shows a plan and longitudinal section of the bridge.

For this example for a state project with special construction control, the TS&L gives the following information needed for design of abutment piles:

- Three span, 240-foot prestressed concrete beam superstructure
- Seven D-beam cross section

- Zero skew
- Integral abutments
- Pile foundations with 10-foot prebored holes
- Bottom of west abutment footing at natural ground elevation

Step 2 - Develop soils package, including soil borings and foundation recommendations
Based on locations of the abutments the soils design engineer orders soil borings, typically at least one per substructure unit. When the engineer receives the boring logs he/she arranges for them to be plotted on a longitudinal section, checks any special geotechnical conditions on the site, and writes a recommendation for foundation type with any applicable special design considerations.

For this example, the soils design engineer recommends the following:

- Piles driven into very firm glacial clay
- Steel H-piles for the integral abutments
- Structural Resistance Level – 1 (which does not require a driving analysis by the Construction and Materials Bureau during design [BDM 6.2.6.1]. SRL-1 in this case allows the designer to consider both friction and end bearing.)
- Normal driving resistance (This will lead to $\varphi_c = 0.60$ for the structural check.)
- No special site considerations for stability, settlement, or lateral movement (Therefore a Service I load will not be required for design.)
- Standard construction control based on WEAP analysis with 3-day planned retap (At present the planned retap is not usual Iowa DOT practice.)

The soil profile is as follows. Note that the top of Stratum 3 falls at the elevation of 30 feet below natural ground. Below 30 feet the friction resistance increases [BDM Table 6.2.7-2].

- Stratum 1, topsoil 3 feet;
- Stratum 2, firm glacial clay 27 feet, average N-value = 11; and
- Stratum 3, very firm glacial clay 50 feet, average N-value = 25.

Step 3 - Determine pile layout, pile loads, and other design requirements. This step includes structural checks.
The final design engineer begins design of the abutment piles with the TS&L and the soils design package. Because the bridge has a prestressed concrete beam superstructure and integral abutments, the engineer selects HP 10×57 piles, following Bridge Design Manual policy [BDM 6.5.1.1.1].

Notation: The same loads are designated in Step 3 with “P” and in Steps 6 and 8 with “Q”.

Based on total Strength I abutment load and Bridge Design Manual policy for pile spacing and number of piles [BDM 6.5.4.1.1], the final design engineer determines the following:

- Strength I factored load for abutment (not including wing extension) piles = 900 kips
- Nominal structural resistance per pile at SRL-1 = 243 kips [BDM Table 6.2.6.1-1]

- Nominal maximum structural resistance for an integral abutment pile with 10-foot prebore = 365 kips [BDM Table 6.5.1.1.1-1], but the SRL-1 nominal resistance of 243 kips controls
- Minimum number of piles based on structural resistance = 900/(0.6)(243) = 6.17, rounded up to 7
- Minimum number of piles based on superstructure cross section: 7 beams, therefore 7 piles [BDM 6.2.4.1]. (The designer also needs to check minimum and maximum pile spacing guidelines in BDM 6.2.4.1.)
- Seven piles with two wing extension piles as shown in the figure, if geotechnical resistance is sufficient
- Strength I factored load per abutment pile, P_u = 900/7 = 129 kips

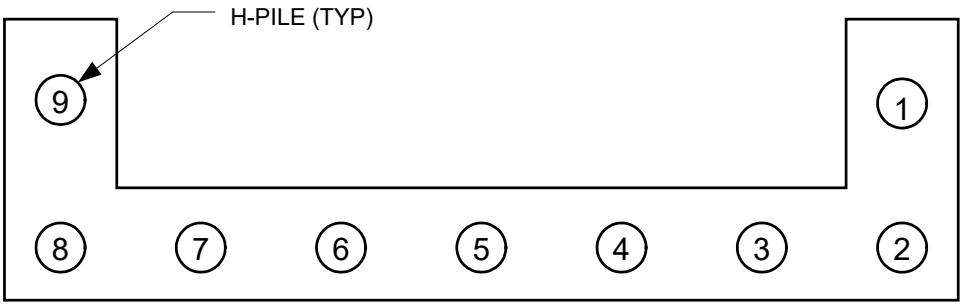

Track 3, Example 2-pile layout at an abutment

Because the bridge characteristics fall within integral abutment policy, the site has no unusual characteristics, the soils design engineer did not require further analysis, the project does not require staged construction, and construction will not be accelerated or delayed, there will be no need for lateral load or special analysis of the abutment piles. They may simply be designed for applied vertical load.

Step 4 - Estimate nominal geotechnical resistance for friction and end bearing
Based on the west abutment soil profile and BDM Tables 6.2.7-1 and 6.2.7-2, the final design engineer estimates the following nominal resistances for friction and end bearing as shown in the table below.

Track 3, Example 2-estimated nominal geotechnical resistance

Soil Stratum	Soil Description	Stratum Thickness (ft)	Average SPT N Value (blows/ft)	Estimated Nominal Resistance for Friction Pile (kips/ft)	Estimated Nominal Resistance for End Bearing (ksi)
1	Topsoil	3 below natural ground	---	---	---
2A	Firm Glacial Clay	7 remainder of prebore	---	---	---
2B	Firm Glacial Clay	20 below prebore	11	2.8	---
3	Very Firm Glacial Clay (30 feet below the natural ground elevation)	50	25	4.0	2

Step 5 - Select resistance factor to estimate pile length based on the soil profile and construction control

For a driven H-pile with construction control using WEAP, the following resistance factor is recommended to estimate the contract pile length for friction bearing in cohesive soil [BDM Table 6.2.9-1]. Only cohesive soil was present below the west abutment.

φ = **0.65 for cohesive soil**, averaged over the full depth of estimated pile penetration

Step 6 - Calculate required nominal pile geotechnical resistance, R_n

Using the results from Steps 4 and 5, the required nominal pile resistance is

$R_n = 129/0.65 = 198$ kips/pile

Step 7 – Estimate contract pile length, L

Based on the nominal resistance values in Step 4, the cumulative nominal geotechnical resistance, $R_{n\text{-}BB}$, per pile is calculated as follows, where D = depth in feet below the bottom of footing (which in this example also is the depth below natural ground elevation).

$D_0 = 0$ ft, $R_{n\text{-}BB0} = 0$
$D_1 = 10$ ft, $R_{n\text{-}BB1} = R_{n\text{-}BB0} + 0 = 0$
$D_2 = 10 + 20 = 30$ ft, $R_{n\text{-}BB2} = R_{n\text{-}BB1} + (2.8 \text{ kips/ft})(20 \text{ ft}) = 0 + 56.0 = 56.0$ kips
$D_3 = 30 + x$ ft, $R_{n\text{-}BB3} = R_{n\text{-}BB2} + (2.0 \text{ ksi})(16.8 \text{ in}^2) = 56.0 + 33.6 = 89.6$ kips
$D_4 = 30 + x$ ft, $x = (198 \text{ kips} - 89.6 \text{ kips})/4.0 \text{ kips/ft} = 27.1$ ft, $D_4 = 30 + 27.1 = 57.1$ ft

The contract pile length includes a 2-foot embedment in the abutment footing and a 1-foot allowance for cutoff due to driving damage.

$L = 57.1 + 2 + 1 = 60.1$ feet

The length for steel H-piles is specified in 5-foot increments [BDM 6.2.4.2]. Therefore, the contract pile length is rounded to 60 feet.

Step 8 - Estimate target nominal pile driving resistance, $R_{ndr\text{-}T}$
During the construction stage the pile will be retapped at 3 days, however, the basic retap information was developed a seven-day retap. Therefore, the target nominal pile driving resistance for a three-day retap was corrected based on the seven-day information.

First, select the construction resistance factor [BDM Table 6.2.9-3].

φ_{TAR} **= 0.70 for cohesive soil,** with required retap test after EOD

Then determine the nominal geotechnical bearing resistance per pile.

$R_n = 129/0.70 = 184$ kips

The average SPT N-value over the length of estimated pile embedment is needed for the setup factor chart.

$N_a = [(20)(11) + (27)(25)]/47 = 19$

From the 7-day retap curve in the graph below [partial BDM Figure 6.2.10],

$R_n/R_{EOD} = 1.57$

The target nominal geotechnical resistance at EOD is:

$R_{EOD} = 184/1.57 = 117$ kips = 59 tons

Determine the nominal resistance at 3 days. From the 3-day curve in the graph below,

$R_n/R_{EOD} = 1.52$

The target nominal geotechnical resistance at the 3-day retap then is:

$R_{3\text{-}day} = (117)(1.52) = 178$ kips = 89 tons

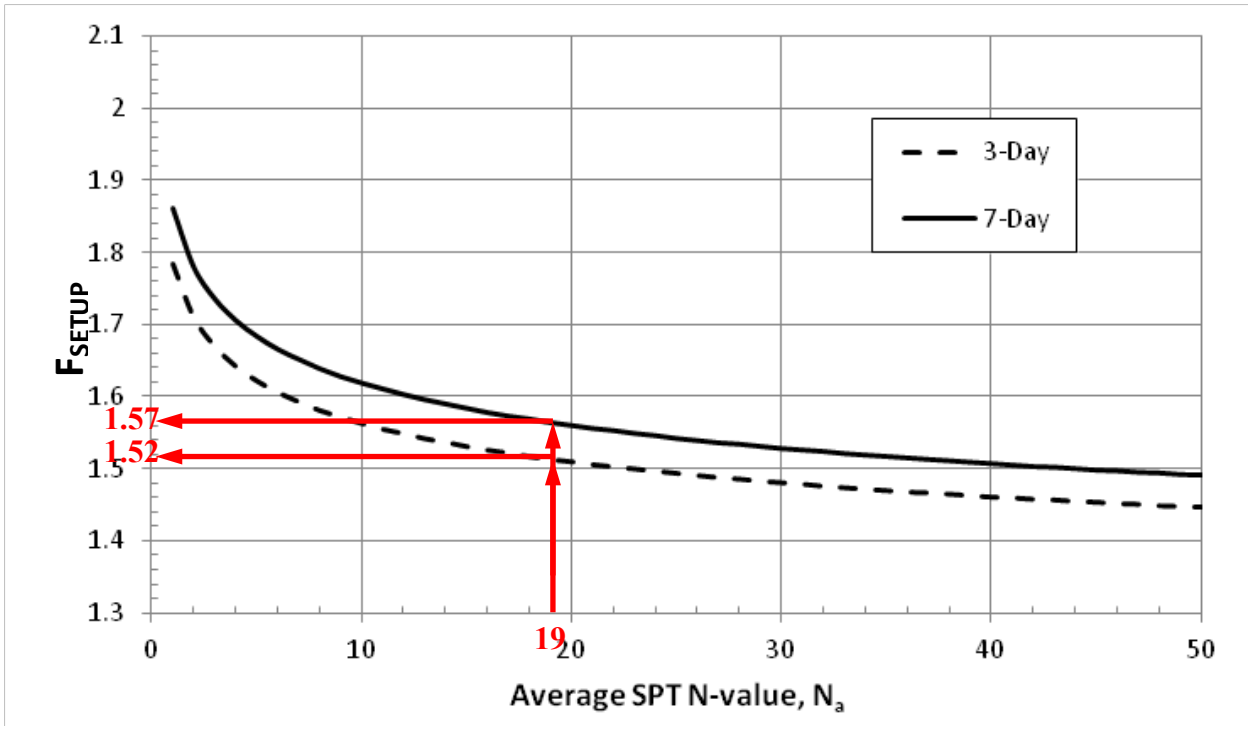

Track 3, Example 2-pile setup factor chart [partial BDM Figure 6.2.10]

Step 9 – Prepare CADD note for bridge plans

At this point the final design engineer selects the appropriate CADD notes and adds the specific pile load values to the notes [BDM 13.8.2].

E818: Abutment piles, LRFD contract length and resistance

THE CONTRACT LENGTH OF 60 FEET FOR THE WEST ABUTMENT PILES IS BASED ON A COHESIVE SOIL CLASSIFICATION, A TOTAL FACTORED AXIAL LOAD PER PILE (P_U) OF 129 KIPS, AND A GEOTECHNICAL RESISTANCE FACTOR (PHI) OF 0.65.

THE NOMINAL AXIAL BEARING RESISTANCE FOR CONSTRUCTION CONTROL WAS DETERMINED FROM A COHESIVE SOIL CLASSIFICATION AND A GEOTECHNICAL RESISTANCE FACTOR (PHI) OF 0.70. PILES ARE ASSUMED TO BE DRIVEN FROM A START ELEVATION AT THE BOTTOM OF PREBORE.

E819: Abutment piles, driving and construction control

THE REQUIRED NOMINAL AXIAL BEARING RESISTANCE FOR WEST ABUTMENT PILES IS 59 TONS AT END OF DRIVE. PILES SHALL BE RETAPPED AT THREE DAYS WITH A REQUIRED NOMINAL AXIAL BEARING RESISTANCE OF 89 TONS. THE PILE CONTRACT LENGTH SHALL BE DRIVEN AS PER PLAN UNLESS PILES REACH REFUSAL. CONSTRUCTION CONTROL REQUIRES A WEAP ANALYSIS WITH BEARING GRAPH AND A RETAP AT THREE DAYS AFTER EOD.

Step 10 – Check the design

Within the Bridges and Structures Bureau at the Iowa DOT a final design engineer other than the

bridge designer is assigned to give the bridge design an independent check at the time final plans are complete. During the checking process a final design engineer will review the soils package to ensure that all recommendations were followed and also will check structural, geotechnical, and drivability aspects of the design.

Other design organizations may perform checks at various stages of design rather than upon plan completion.

END DESIGN PHASE

BEGIN CONSTRUCTION PHASE

Step 11 – Request and check contractor's hammer data and prepare bearing graph for WEAP control

After the bridge contract is let and prior to start of pile driving, the contractor completes Hammer Data sheets for the pile driving hammer that he/she plans to use. The Hammer Data sheets include all pertinent information including the cap (helmet) number and hammer identification information with details, hammer cushion, and pile cushion (where required), as well as pile size, pile length, and required (or target) nominal axial pile driving resistance. For state projects the Construction and Materials Bureau uses the data received to complete a WEAP analysis for construction control during pile driving. Results from the WEAP analysis are then used to prepare an LRFD Bearing Graph as shown in the figure below (without the factor of safety used for allowable stress design). The Bearing Graph includes hammer stroke height curves that relate blows per foot to nominal driving resistance, and identifies specific driving conditions, where driving stress is a concern.

Special Driving Conditions	Stroke (ft)	Monitor at 10 Blow Increments	Do NOT Exceed	Project No:	Design Example DGT32	Graph No:	XX-XXXX-XX-XXX
				Design No:	XXX	Hammer No:	XXXXXX
	7	-----	-----	County:	XXXXX	Cap No:	XXX
	8	-----	-----	Location:	West Abutment	Pile Type:	HP 10x57
Blows per foot	9	-----	-----	Hammer:	Delmag D19-42	Pile Length:	60

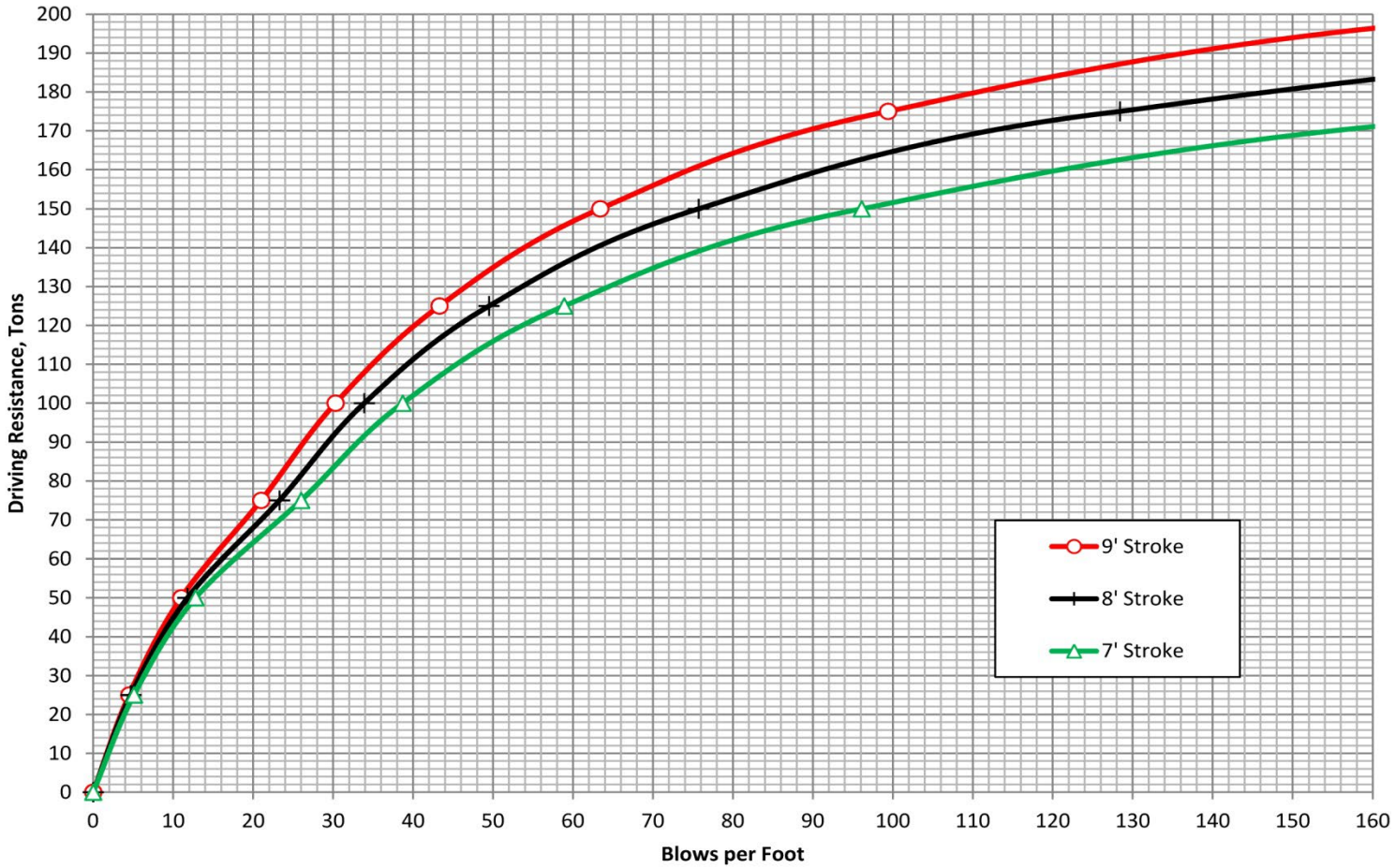

Track 3, Example 2-WEAP bearing graph for the west abutment

Step 12 - Observe construction, record driven resistance, and resolve any construction issues

During pile driving, the construction inspector records the hammer stroke and number of blows to advance the pile an equivalent penetration of 1 foot, and then converts the recorded information with the Bearing Graph to record the driven resistance per pile at EOD. This information is shown in the driving log below.

In this example the inspector would record the EOD values and observe and record retaps three days after EOD. Unless otherwise noted on the plans the number of retaps required would follow Iowa DOT policy in the standard specifications [IDOT SS 2501.03, M, 5].

At EOD at Pile 8, the construction inspector recorded a driving resistance of 56 tons (There is a slight error in the log; at 14 blows per foot the graph reads about 53 tons.), which is less than the target nominal pile driving resistance of 59 tons at EOD. However, no immediate pile extension is needed for Pile 8, since the construction control is based on planned retap at 3 days. Three days after EOD, Pile 8 was retapped, and the construction inspector recorded a driving resistance of 92 tons, which is greater than the target nominal pile driving resistance of 90 tons for 3-day retap. Therefore, Pile 8 meets the design requirement and no pile extension is needed.

Form 830209(E) 9/06

Iowa Department of Transportation

ENGLISH LOG OF PILING DRIVEN WITH WAVE EQUATION

Project No. Someplace in Iowa

County XXX

Design No. XXX

Contractor XXXX

Driving Graph No. XX-XXXX-XX-XXX

Nominal Driving Resistance 59 (EOD) / 89 (3-Day Restrike) Tons

Pile (Type and Size) HP 10x57
(Wood, Steel or Concrete)

Hammer (Type & Model) Delmag D19-42
(Gravity or Diesel, manufacturer and model)

Foundation Description West Abutment
(North abut, Pier 1, etc.)

Station of Foundation C.L. XXX+XX

Sketch foundation below, number each pile and show steel H-pile orientation as installed. Note battered piles on sketch,and give the amount of batter. Place name and certificate number of welder below if welding was necessary. Forward copies, including driving graph, as outlined in the construction manual. Note on drawing which pile has been logged.

Batter Piling _____ in the direction shown.

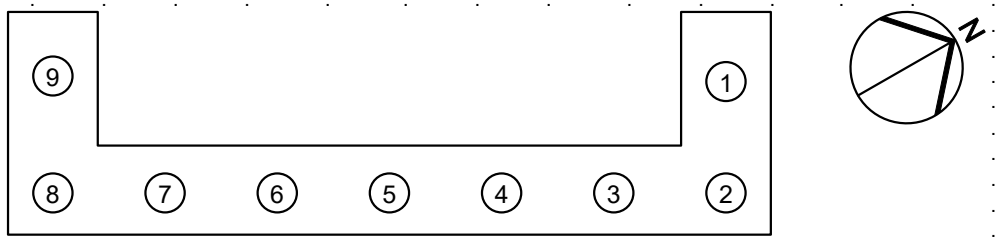

Pile No.	Date Driven	(1) Plan Length (ft.)	Length Cutoff (0.0 ft.)	Blows Per Foot	Ram Rise (ft.)	Driven Resistance (Tons)	RETAP (2) Date	Ram Rise (ft.)	Blows Per Foot	Driven Resistance (Tons)	PILE EXTENSIONS (3) Length Added (0.0 ft.)	Length Cutoff (0.0 ft.)	Ram Rise (ft.)	Blows Per Foot	Driven Resistance (Tons)	Welds (Count)
1	05-17-10	60	1.0	18	7.5	62	05-20-10	8	34	100						
2	05-17-10	60	1.0	21	8	68	05-20-10	7	36	95						
3	05-17-10	60	1.0	20	7	63	05-20-10	7.5	39	105						
4	05-17-10	60	1.0	25	8	78	05-20-10	8.5	40	115						
5	05-17-10	60	1.0	16	9	62	05-20-10	9	32	103						
6	05-18-10	60	1.0	20	8.5	70	05-21-10	8.5	38	111						
7	05-18-10	60	1.0	17	7.5	60	05-21-10	7	39	100						
8	05-18-10	60	1.0	14	7	56	05-21-10	7.5	32	92						
9	05-18-10	60	1.0	19	8.5	67	05-21-10	8	33	98						
---	---	---	---	---	---	---										

Total Welds: _____

(1) Record in the Remarks section below if the pile length is anything other than the plan length at the beginning of drive.

(2) Indicate date of retap in date column (1 day delay min.). List only pile actually checked.

(3) Additional pile length to be authorized by Construction Office.

Plan Length: _____ Feet

Extensions: _____ Feet

Total: _____ Feet

Welders Name: _____ Lab No.: _____ Exp. Date: _____

Remarks: _____

Inspector _____ Date _____ Project Engineer _____

Distribution: Construction (original), District, Project File

Track 3, Example 2-west abutment pile driving log

TABLE OF CONTENTS ~ DRILLED SHAFTS

6.3 Drilled shafts
6.3.1 General
6.3.1.1 Policy overview
6.3.1.2 Design information
6.3.1.3 Definitions
6.3.1.4 Abbreviations and notation
6.3.1.5 References
6.3.2 Loads
6.3.3 Load application
6.3.3.1 Load modifier
6.3.3.2 Limit states
6.3.4 Analysis and design
6.3.5 Detailing

6.3 Drilled shafts

6.3.1 General

Drilled shafts directly support bridge substructure components, light towers, sign structures, and other transportation structures. In addition to this series of articles the designer should review the design manual articles for specific substructure components and sign supports: abutments [BDM 6.5], piers [BDM 6.6], and sign supports [BDM 10.2].

With few exceptions the Bureau has used drilled shafts only for highway bridge foundations, and those foundations now are being designed by load and resistance factor design (LRFD). In the future the Bureau may use drilled shafts for light tower and sign structure foundations more often, but the AASHTO specifications for those structures and their foundations presently are based on allowable stress design (ASD). Those ASD specifications, however, are being rewritten for LRFD. In view of the present Bureau use of drilled shafts and the coming changes, the more general articles [BDM 6.3.1.1 - 6.3.1.5] are written to cover both LRFD and ASD drilled shaft foundations, but the remaining articles [BDM 6.3.2 through 6.3.5] cover only LRFD drilled shafts for highway bridges.

6.3.1.1 Policy overview

Although the Bureau most commonly supports bridge substructure components on piles, bridge piers are supported on drilled shafts where drilled shafts are economical and advantageous. In most cases the Bureau does not support abutments on drilled shafts because the Bureau routinely uses integral abutments, for which drilled shafts do not have the lateral flexibility necessary to accommodate the thermal movements. In one special case, however, the Bureau successfully experimented with integral abutments supported on H-piles inserted in drilled shafts. For situations involving shallow rock, where semi-integral abutments or stub abutments are used and where piles or spread footings on rock are not a good option, drilled shafts may be used.

Drilled shafts are reinforced concrete columns poured in relatively large diameter holes drilled into soil and rock. For support of bridge substructures drilled shafts provide compact foundations that are more likely than pile foundations to fit within divided highway medians and adjacent to existing structures. Drilled shafts can be installed relatively quickly with less noise and vibration than pile foundations, which often is an important consideration for urban sites or sites adjacent to buildings or sensitive structures. For waterways, drilled shafts with permanent casings in a single shaft per frame pier column arrangement may be more economical in a shallow rock situation than a pier on pile footings or spread footings on rock since it may eliminate the need for coffer dams. Drilled shafts are also preferred over spread footings in

cases where the Soils Design Unit has determined that shallower depth shales may degrade when exposed to air. Compared to piles, drilled shafts have relatively large lateral load resistances.

Drilled shafts may function as bridge supports without or with separate footings. Without footings, drilled shafts may simply be extensions of the columns of frame piers or narrow column T-piers. A drilled shaft should be about 6 inches larger in diameter than a column above to accommodate construction tolerances. In cases where drilled shafts need to be grouped it is necessary to provide footings as for piles. Closely spaced drilled shafts require consideration of loss of capacity and increased settlement due to group effects.

Multi-span bridge replacement projects whether using traditional construction or ABC have occasionally constructed drilled shafts for the replacement bridge just outside the footprint of the existing bridge before demolishing the existing bridge to allow the road to remain open to traffic for a longer period of time. In these situations, it is preferred the designer supply at least 18 inches of clearance between the perimeter of the drilled shaft and the closest edge of the existing superstructure, but a minimum clearance of 12 inches is acceptable. In some cases, it may be possible to increase clearance by removing a portion of the existing superstructure near the proposed shaft (e.g. remove a portion of a curb overhang on an existing bridge which is not structurally necessary).

Although a demonstration shaft typically is required for a bridge project involving drilled shafts to check the equipment and methods of the contractor, the requirement is waived for experienced contractors. In cases where soil design parameters need to be confirmed, a demonstration or production shaft may be instrumented with an Osterberg Load Cell. The designer should consult with the Soils Design Unit and the supervising Unit Leader when Osterberg Load Cell instrumentation is required.

Typically, the Bureau requires that drilled shafts for bridge support be socketed into rock. Exceptions to tip-out in soil shall be approved by the Soils Design Unit and the Chief Structural Engineer. For ordinary bridges, drilled shafts may be considered when bedrock is within 40 to 75 feet of the existing ground surface. In the most common design condition, a drilled shaft is designed to carry load by side friction in a rock socket. The rock socket should have a diameter 6 inches less than the shaft diameter and may be grooved or smooth depending on the type of rock encountered. If estimated settlements are small, end bearing capacity on bedrock may be added to the side friction capacity. Otherwise, the drilled shaft should be extended into the rock for additional side friction capacity. To minimize the effects of construction issues, drilled shafts socketed into rock shall extend an additional 12” into the rock beyond what is required for geotechnical capacity.

The Iowa DOT has accumulated test data for drilled shafts socketed in shale and limestone. The test data currently are available to designers from the Soils Design Unit.

Drilled shafts should not be battered because construction of non-vertical drilled shafts is difficult. In cases where lateral loads are large, drilled shafts may be thickened to increase lateral load capacity. If thicker shafts have insufficient lateral load capacity, more shafts should be placed and tied together with a footing to carry the lateral loads.

Bureau policy is to reinforce drilled shafts over the full height, and the designer should note that a reinforcing cage will require splicing of longitudinal bars if the cage is more than 60 feet in length. The typical reinforcing cage is similar to the cage for a round reinforced concrete column, with equally spaced vertical bars and a spiral. Ties, if used in place of the spiral, are developed with laps rather than hooks so that there are no obstructions within the cage.

Due to lack of redundancy in many applications, quality control of drilled shafts is important. The Bureau considers it necessary to test each drilled shaft used for support of bridges, light towers, and sign structures. The Bureau requires crosshole sonic log (CSL) testing, with at least four 2-inch diameter pipes equally spaced inside the reinforcing cage. The testing is covered in the Iowa DOT Standard Specifications [IDOT SS 2433], which are applicable for bridge foundations.

The Bureau generally permits use of cased or uncased shafts as appropriate for soil, water, and adjacent structure conditions at the site. Casing is required where soil conditions promote caving, where artesian conditions exist, and where caving would damage adjacent foundations. The clearance needed between drilled shafts for a replacement structure and the foundations of an existing structure must be carefully considered, particularly if the existing bridge is to remain in service during shaft construction. Interference between a shaft and battered pile should be avoided since it can affect both shaft constructability and battered pile capacity. Shafts installed near existing bridge foundations should ordinarily use temporary or permanent casing to prevent caving of the shaft hole and possible instability to existing adjacent foundations. Shafts installed through sand layers are particularly susceptible to caving and the designer should consult with the Soils Design Unit for guidance on how much clearance is needed between the shaft and existing foundation. For artesian conditions, the elevation of the top of the casing is increased until water no longer flows out of the top. Also, where drilled shafts are located within close proximity to rail lines the designer shall investigate the need for and depth of temporary casing.

Uncased shafts may be constructed dry or with slurry depending on soil conditions. The Iowa DOT Standard Specifications and the developmental specification permit use of either mineral or polymer slurry.

In all cases the designer shall consider existing foundations, utilities, and drainage when locating drilled shafts.

Structural design of drilled shafts for bridge foundations is governed by the *AASHTO LRFD Bridge Design Specifications*, and the designer should consult *Drilled Shafts: Construction Procedures and LRFD Design Methods* by Brown, et al. for design information [BDM 6.3.1.5]. However, structural design of drilled shafts for light tower and sign support foundations is governed by *Standard Specifications for Structural Supports for Highway Signs, Luminaires, and Traffic Signals, Fifth Edition*, which are based on allowable stress design. For those structures the designer should consult *Drilled Shafts: Construction Procedures and Design Methods* by O'Neil and Reese [BDM 6.3.1.5].

Currently the Bureau has no standard sheets available for drilled shaft foundations.

6.3.1.2 Design information

The soils design package provided for each bridge site by the Soils Design Unit contains the soil logs and rock coring information needed for bridge foundation design [BDM 6.1.2], and the preliminary situation plan locates the borings. Although crews make every effort to take borings at proposed drilled shaft locations, on some sites drilled shaft locations will be inaccessible. If the designer needs to interpolate between widely separated borings, the designer should recognize that actual site conditions may require deeper drilled shafts than the interpolation would suggest. The designer also may consult with and request recent local test data for drilled shafts socketed in shale and limestone from the Soils Design Unit. When using the data, the designer shall ensure that test shaft conditions are duplicated in the new design (for example, rock socket grooving).

Soils information for light tower and sign structure sites may be available in a less formal manner. As needed the designer shall consult with the Soils Design Unit for appropriate information.

For specification or construction information beyond the information in this manual the designer should consult the following sources.

- Contracts and Specifications Bureau, *Standard Specifications for Highway and Bridge Construction,* Section 2433. Concrete Drilled Shafts (Available on the Internet at: https://www.iowadot.gov/specifications/pdf/completebook.pdf)
- Construction and Materials Bureau, *Construction Manual* (Available on the Internet at: http://www.iowadot.gov/erl/current/CM/Navigation/nav.pdf)
- Construction and Materials Bureau, *New Bridge Construction Handbook* (Available on the Internet at:

https://iowadot.gov/construction_materials/structures_foundations/bridge_construction_handbook.pdf)

6.3.1.3 Definitions

Reserved.

6.3.1.4 Abbreviations and notation

ASD, allowable stress design
CSL, crosshole sonic logging
LRFD, load and resistance factor design

6.3.1.5 References

American Association of State Highway and Transportation Officials (AASHTO). *Standard Specifications for Structural Supports for Highway Signs, Luminaires, and Traffic Signals, Fifth Edition.* Washington: AASHTO, 2009.

Brown, D.A., J.P. Turner, and R.J. Castelli. *Drilled Shafts: Construction Procedures and LRFD Design Methods, Publication No. FHWA-NHI-10-016.* Washington: Federal Highway Administration (FHWA), 2010.

Construction and Materials Bureau. *Construction Manual.* Ames: Construction and Materials Bureau, Iowa Department of Transportation, 2006. (Available on the Internet at: http://www.iowadot.gov/erl/current/CM/Navigation/nav.pdf)

O'Neill, M.W. and L.C. Reese. *Drilled Shafts: Construction Procedures and Design Methods, Publication No. FHWA-IF-99-025.* Washington: Federal Highway Administration (FHWA), 1999.

Sunday, W. and K. Frame. *New Bridge Construction Handbook.* Ames: Construction and Materials Bureau, Iowa Department of Transportation, 2000. (Available on the Internet at: http://www.iowadot.gov/construction/structures/bridge_construction_handbook.pdf)

6.3.2 Loads

[AASHTO-LRFD 3.6.2.1]

Loads are transmitted directly to drilled shafts from bridge substructure components such as stub abutments, pier columns, and pier footings. Live, dead, and other loads transmitted to a drilled shaft shall be determined from the design manual articles for the component or structure supported by the footing as follows: abutments [BDM 6.5.2] and piers [BDM 6.6.2].

Lateral loads and eccentric loads applied to a bridge substructure component or structure, as well as frame action, will cause shear and moment, and those effects need to be considered in addition to axial loads in the design of the supporting drilled shafts.

For the design of drilled shafts entirely below ground, dynamic load allowance generally should be excluded from the vertical loads [AASHTO-LRFD 3.6.2.1]. However, if a column is integral with a drilled shaft that is entirely below ground, as a conservative design simplification the designer may choose to include the dynamic load allowance on the drilled shaft.

In cases where drilled shafts are placed below the water table, loads due to buoyancy shall be considered.

6.3.3 Load application

6.3.3.1 Load modifier

[AASHTO-LRFD 1.3.2, 3.4.1]

Load factors shall be adjusted by the load modifier, which accounts for ductility, redundancy, and operational importance [AASHTO-LRFD 1.3.2, 3.4.1]. For typical drilled shaft foundations for bridges the load modifier shall be taken as 1.0.

6.3.3.2 Limit states

[AASHTO-LRFD 3.4.1, 3.4.2]

For a typical drilled shaft foundation for a bridge, the designer shall consider the following load combinations for the supported structural component, as applicable [AASHTO-LRFD 3.4.1]. However, the designer should be alert to design conditions in which additional strength limit load combinations may control. For design of abutment foundations, the designer should use judgment to exclude any combinations that will not control.

- Strength I, superstructure with vehicles but without wind
- Strength IV, superstructure with very high dead to live load ratio, which often controls for long-span bridges
- Extreme Event II, superstructure with reduced vehicles and vehicular collision, ice, or hydraulic events
- Service I, superstructure with vehicles and with design 3-second gust wind speed at 70 mph

Except for unusual situations, such as eccentric loads during staged construction, the designer need not investigate construction load combinations for bridges [AASHTO-LRFD 3.4.2].

Design of the drilled shaft foundation shall be based on the resulting critical combinations for maximum axial force, maximum moment, and maximum shear.

6.3.4 Analysis and design

For structural and geotechnical design of drilled shafts for bridge foundations the designer shall use the LRFD method.

For geotechnical design of drilled shafts, the designer should use local information available from the Soils Design Unit, if the local information is appropriate for the project site and structure. Otherwise the designer shall use the information in the AASHTO LRFD Specifications.

The Bureau recommends that the designer use *Drilled Shafts: Construction Procedures and LRFD Design Methods, Publication No. FHWA-NHI-10-016* by Brown et al. as a design guide [BDM 6.3.1.5]. If any of the guidelines contained in the FHWA publication conflict with guidelines in this section [BDM 6.3] or the AASHTO LRFD Specifications, the designer shall consult with the supervising Unit Leader.

Drilled shafts used as supports for bridge substructure components will be subject to frame action that extends below the ground line into the shafts. The Bureau prefers that the frame action be considered by means of an iterative solution rather than by arbitrary selection of points of fixity. The designer shall consider the shear and moment caused by frame action in design of both the substructure component and drilled shafts. The designer shall envelope the stiffness of the soil and shaft for analyses involving soil-shaft interaction. Consult the Soils Design Unit for an appropriate range of soil properties. The range of 28-day concrete strengths for shaft stiffness may vary from 4.0 to 8.0 ksi. Note that the structural capacity of the shaft design shall be based on 4.0 ksi unless a higher strength is specified.

If the lateral load at the top of a drilled shaft is greater than the capacity of the shaft, the shaft should be thickened to provide the needed capacity, or additional shafts should be placed and tied together with a footing. Battered shafts are not permissible.

Drilled shafts for bridge foundations generally should be spaced no closer than three diameters center-to-center. If shafts are spaced less than six diameters center-to-center, the designer shall check interaction with adjacent shafts for vertical and lateral load. Depending on type of load, pile spacing, soil type, and other factors there may be a reduction in resistance for some or all of the shafts.

Unless a drilled shaft tipped in soil is approved by the Soils Design Unit and the Chief Structural Engineer, a drilled shaft for support of bridge substructure components shall be socketed into rock. The socket should have a diameter 6 inches smaller than the shaft diameter and should consider the development length for any reinforcing within the socket length. The depth of the rock socket shall be the maximum of the following two conditions:

- The depth of the rock socket shall be at least one and one-half shaft diameters.
- In order to minimize construction issues, the depth of the rock socket shall extend an additional 12” into the rock beyond what is required for geotechnical capacity.

Generally, the drilled shaft design for axial load will be based on the side friction capacity in the socket, but the contribution from end bearing may be added to the side friction capacity under the following two conditions:

- The estimated settlement does not exceed 0.25 inches at the service limit state, and
- The estimated settlement does not exceed 1 inch at the strength limit state, which is defined as a load 2.5 times the service load.

If either settlement limitation is exceeded, the needed bearing may be obtained by side friction from a deeper socket.

Grooving of the sidewalls of rock sockets for drilled shafts is typically desired and specified in softer rocks such as Pennsylvanian age shale, siltstone, mudstone, and sandstone, including Pennsylvanian age rocks that include limestone stringers, etc. The Soils Design Unit has several load tests on drilled shafts with grooved rock socket sidewalls in Pennsylvanian age rock material, and the results of those load tests are frequently used for design of drilled shafts in similar material. Therefore, grooving in Pennsylvanian age rock materials is necessary when previous load test results have been used as a basis for a current design.

However, grooving is not to be specified in harder rocks such as limestone or dolomite/dolostone because grooving in these harder materials is simply not possible. The designer always should consult the Soils Design Unit to discuss and determine grooving of the rock sockets in drilled shafts.

The Iowa DOT Standard Specifications [IDOT SS 2433.03, E] require grooving and brushing of the sidewalls of a rock socket, effective October 2011. Therefore, grooving and brushing is the standard, and the designer shall include a note on the project plans when grooving is not required [BDM 13.8.2, E740/M740]. All rock sockets, whether grooved or not, shall be brushed.

Grooving is not to be specified for any portion of a drilled shaft in soil.

If permanent or temporary casing is required, the designer shall not consider any side friction capacity over the length of the casing. Permanent casing shall not extend more than 1 foot into rock.

Contractors often use temporary casings in the soil at the top of the shaft that are 10 to 15 feet in length and 6 to 12 inches larger in diameter than the nominal shaft dimension at that location. These larger diameter temporary casings are filled with concrete when the shaft is poured which increases the dead load on the shaft and potentially increases any downdrag forces that may be acting on the larger diameter. The designer shall calculate the dead load of the shaft, for portions of the shaft above the rock socket, based on the nominal diameter of the shaft above the rock socket plus an additional 12 inches. If a drilled shaft penetrates consolidating soil layers, the designer shall consider the effect of downdrag. The designer shall calculate the downdrag force based on a drilled shaft diameter equal to the nominal shaft

diameter in and above the consolidating soil layers plus 12 inches. Include CADD Note E745 and E750 as necessary. The designer may also need to consider the effect that a change in diameter has on the stiffness of the drilled shafts and the potential effects on the design. In general, if a shaft diameter increase is introduced over a relatively short length of the shaft it is typically not necessary to meet the minimum longitudinal reinforcement requirement for the larger diameter shaft in that region.

Minimum drilled shaft diameter shall be 24 inches. Larger drilled shaft diameters should be selected in increments of 6 inches. Drilled shafts for bridge support shall be at least 36 inches in diameter to accommodate inspection. In cases where the drilled shaft is a direct extension of a bridge column, the diameter of the drilled shaft shall be a minimum of 6 inches larger than the diameter of the column.

The designer shall consider the permissible construction tolerance for the plan position of a drilled shaft. The current specifications for drilled shafts specify the plan tolerance as 3 inches [IDOT SS 2433.03, A, 1].

Drilled shaft concrete shall have a 28-day strength of 4.0 ksi, unless the supervising Unit Leader approves a higher value.

Drilled shaft reinforcement shall be Grade 60 with minimum yield strength of 60 ksi.

Drilled shafts shall be reinforced full height.

6.3.5 Detailing

[AASHTO-LRFD 10.8.3.9]

For drilled shafts used for bridge support, reinforcement cover, spacing, and development shall meet the AASHTO LRFD Specifications [AASHTO-LRFD 10.8.3.9]. Longitudinal bars shall be #8 or larger. When a large amount of longitudinal steel is required, the designer may use bundled bars. Longitudinal reinforcement should be a minimum of eight bars or bundles. The designer should avoid use of double cages. Longitudinal bar splices shall be staggered. The designer shall not splice more than 50% of the bars at any location, and splice locations shall be a minimum of 10 feet apart.

The Bureau prefers that a drilled shaft be designed as a tied column and detailed with both a spiral that has turns spaced at 12 inches and an alternate for ties at 12 inches anchored with laps to avoid reinforcement congestion and interference with concrete during placement. Spirals and ties shall be #4 or larger. An extra 1½ turns of the spiral shall be used at the top and bottom. At a spiral splice location, the splice length shall be the Class B splice length required for the bar size, minimum cover, top bar condition, and coating condition given in Table 6.3.5.

Under bent bar details, the tie alternate for the spiral shall be given. The tie size shall match the spiral bar size. The tie lap shall be the Class B splice length required for the bar size, minimum cover, top bar condition, and coating condition given in Table 6.3.5.

Table 6.3.5. Splice length for shaft spirals and ties

Spiral or Tie Bar Size	Minimum Concrete Cover Inches	Uncoated Bar Splice Length, Inches	Epoxy-coated Bar Splice Length, Inches
#4	1.5	25	30
#5	1.875 (1)	32	38

Table note:

(1) A cover larger than required for corrosion protection is necessary to reduce the #5 splice lengths shown in the table.

The tie lap shall be rotated 90 degrees from one tie to the next as indicated in Figure 6.3.5.

For aesthetic reasons, drilled shafts extending above the ground without permanent casing shall require a formed finish from the top of the shaft to at least 12 inches below the finished ground surface.

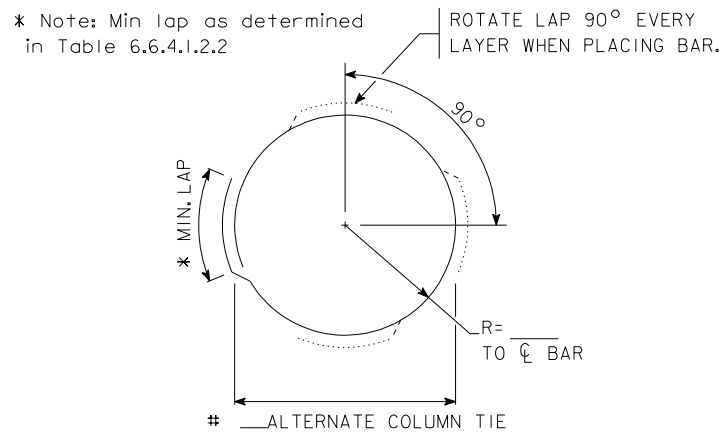

Figure note:

- Determine minimum lap from Table 6.3.5.

Figure 6.3.5. Alternate shaft tie detail

If a drilled shaft is placed with temporary or permanent casing, the outside diameter of the rebar cage should be at least 6 inches less than the diameter of the casing to provide for flow of concrete between the cage and hole and to provide for adequate cover. In cases where the rock socket diameter is 6 inches less than the cased shaft diameter, the full height rebar cage shall have an outside diameter 6 inches less than the rock socket diameter which, in turn, is 12 inches less than the cased shaft diameter.

Drilled shafts with a rock socket shall include the following plan details:

- Estimated top of competent bedrock elevation
- Minimum rock socket length in feet
- Estimated bottom of drilled shaft elevation

Note that friction in the first 12 inches of the rock socket is typically ignored if casing is used since the casing is assumed to penetrate up to 12 inches into the rock socket. The estimated top of competent bedrock elevation is the elevation at which the rock socket is assumed to begin and, when applicable, should not exclude the assumed 12 inches of casing penetration.

All drilled shafts shall have provisions for crosshole sonic logging (CSL), and the designer shall show on the plans a CSL access pipe layout for each unique drilled shaft. One 2-inch diameter access pipe shall be provided per 1 foot of shaft diameter, but there shall be a minimum of four access pipes per shaft. The access pipes shall be equally spaced around the inside perimeter of the reinforcing cage. The layout should provide adequate space around CSL access pipes for concrete consolidation. The layout should avoid congested areas, especially between column and drilled shaft reinforcing cages and should avoid placing reinforcing bars in a direct line between any two access pipes.

C6.3 Drilled shafts

C6.3.4 Analysis and design

2011 ~ Grooving of Drilled Shaft Rock Sockets

Whether grooving of the sidewalls of a rock socket is appropriate depends on the hardness of the rock. If the rock is soft, grooving is required; if the rock is hard, grooving is not feasible. Because grooving inadvertently was not specified for a few projects with soft rock sockets, the Office of Construction requested a specification change to make grooving (rather than not grooving) the standard. Thus, for hard rock sockets, the designer will need to include a note on the plans to omit grooving. The Soils Design Section will determine the need for grooving and provide the decision to the designer. All rock sockets, whether grooved or not, are intended to be brushed.

TABLE OF CONTENTS ~ SPREAD FOOTINGS

6.4 Spread footings
6.4.1 General
6.4.1.1 Policy overview
6.4.1.2 Design information
6.4.1.3 Definitions
6.4.1.4 Abbreviations and notation
6.4.1.5 References
6.4.2 Loads
6.4.3 Load application
6.4.3.1 Load modifier
6.4.3.2 Limit states
6.4.4 Footings on rock
6.4.4.1 Analysis and design
6.4.4.2 Detailing
6.4.5 Footings on soil
6.4.5.1 Analysis and design
6.4.5.2 Detailing

6.4 Spread footings

6.4.1 General

Footings may be supported on piles, on drilled shafts, on sound rock, or on soil. This article covers spread footings on rock for bridges and spread footings on rock or soil for other structures designed by the LRFD method. For footings on piles, see the pile article [BDM 6.2], the abutment articles [BDM 6.5.4.1, 6.5.4.2] or pier footing article [BDM 6.6.5.1.3] and, for footings on drilled shafts, see the drilled shaft article [BDM 6.3]. For spread footings for sign support structures, see the sign support structures article [BDM 10.2].

6.4.1.1 Policy overview

[AASHTO-LRFD 10.6.1.8]

For bridge projects the Bureau utilizes spread footings for abutments and piers only when the footings can be founded on sound bedrock. Those spread footings are designed for the appropriate service, strength, and extreme event limit states in accordance with the AASHTO LRFD Specifications. Based on site test data and analysis, the Soils Design Unit recommends the geotechnical parameters needed by the designer: the nominal rock bearing resistances at the service and strength limit states and the approximate footing elevations.

Spread footings for retaining walls, sign trusses, and other miscellaneous structures may be founded on soil unless rock is encountered at an elevation at or above normal footing depth. Spread footings for retaining walls shall be designed according to the AASHTO LRFD Specifications.

Spread footings for sign trusses and other structures covered by the AASHTO *Standard Specifications for Structural Supports for Highway Signs, Luminaires and Traffic Signals* [BDM 10.2] should be designed according to the AASHTO Standard Specifications. Spread footings for sign trusses and other structures covered by the AASHTO *LRFD Specifications for Structural Supports for Highway Signs, Luminaires and Traffic Signals* [BDM 10.2] should be designed according to the AASHTO LRFD Specifications.

In all cases the designer shall consider existing foundations, utilities, and drainage when locating new spread footings [AASHTO-LRFD 10.6.1.8].

6.4.1.2 Design information

The "Report of Bridge Soundings" provided for each project site by the Soils Design Unit contains recommendations for foundation type and the soil logs needed for design. If the report recommends spread footings on rock for abutments or piers, or spread footings on soil for other structures, the report also will recommend nominal bearing resistances at the service and strength limit states and elevations of bottoms of footings.

The designer need not investigate global stability because it will be checked by the Soils Design Unit.

Generally, the designer need not check sliding if the spread footing is notched into rock as shown in Figure 6.4.4.2. If the soils report indicates a variable or sloping rock surface the designer should check applied horizontal forces against the friction capacity of the footing on rock or on additional lateral force-resisting details. If a friction check is necessary, the designer shall contact the Soils Design Unit for friction values of the footing on rock at the strength limit state and discuss the situation with the supervising Unit Leader.

The designer shall consult the Soils Design Unit as necessary for additional information and interpretations of subsurface data.

6.4.1.3 Definitions

Mass concrete is defined by ACI as "any volume of concrete with dimensions large enough to require that measures be taken to cope with generation of heat from hydration of the cement and attendant volume change to minimize cracking."

6.4.1.4 Abbreviations and notation

M_u , factored moment applied to a footing
P_u , factored axial force applied to a footing
R_n , nominal bearing resistance of foundation material
Φ, resistance factor for nominal bearing resistance

6.4.1.5 References

American Association of State Highway and Transportation Officials (AASHTO). *Standard Specifications for Structural Supports for Highway Signs, Luminaires, and Traffic Signals,* 6th Edition. Washington: AASHTO, 2013.

American Association of State Highway and Transportation Officials (AASHTO). *LRFD Specifications for Structural Supports for Highway Signs, Luminaires, and Traffic Signals*, 1st Edition. Washington: AASHTO, 2015.

American Concrete Institute (ACI). Guide to Mass Concrete (ACI 207.1R-05) 2012.

6.4.2 Loads

[AASHTO-LRFD 3.6.2.1]

Loads are transmitted directly to spread footings from bridge substructure components such as abutments and piers and from other structures such as retaining walls. Dead (DC and DW), live (LL and PL), and other loads transmitted to a spread footing shall be determined from the design manual articles for the component or structure supported by the footing as follows: abutments [BDM 6.5.2], piers [BDM 6.6.2], and retaining walls [BDM 6.7, in process].

For the design of spread footings for abutments and piers, the dynamic load allowance (IM) shall be excluded from the vertical loads and the pressures transmitted to rock [AASHTO-LRFD 3.6.2.1].

In cases where spread footings are placed below the water table, loads due to buoyancy shall be considered.

If analysis indicates a moment magnifier at the bottom of a column greater than 25 percent, the magnifier from the column shall be applied to the footing moment.

Lateral loads and eccentric loads applied to a bridge substructure component or structure will cause moment and potential for overturning at the level of the spread footing. The designer shall consider the eccentric pressure resultant on the footing and apply the limitations stated in the spread footing analysis and design articles that follow [BDM 6.4.4.1, 6.4.5.1].

6.4.3 Load application

6.4.3.1 Load modifier

[AASHTO-LRFD 1.3.2, 3.4.1]

Load factors shall be adjusted by the load modifier, which accounts for ductility, redundancy, and operational importance [AASHTO-LRFD 1.3.2, 3.4.1]. For typical bridge spread footings, the load modifier shall be taken as 1.0.

6.4.3.2 Limit states

[AASHTO-LRFD 3.4.1, 3.4.2]

For a typical spread footing, the designer shall consider the following load combinations at the strength, extreme event, and service limit states for the supported structural component [AASHTO-LRFD 3.4.1]. For design of abutment footings, the designer should use judgment to exclude any combinations that are not critical.

- Strength I, superstructure with vehicles but without wind
- Strength III, superstructure with design 3-second gust wind speed at 115 mph
- Strength V, superstructure with vehicles and with design 3-second gust wind speed at 80 mph
- Extreme Event II, superstructure with reduced vehicles and vehicular collision, ice, or hydraulic events
- Service I, superstructure with vehicles and with design 3-second gust wind speed at 70 mph

Design of the footing shall be based on the resulting critical combinations.

Except for unusual situations, such as eccentric loads during staged construction, the designer will not need to investigate construction load combinations [AASHTO-LRFD 3.4.2].

6.4.4 Footings on rock

6.4.4.1 Analysis and design

[AASHTO-LRFD Section 5, 10.5.5, C10.6.3.2.1, 10.6.3.3]

For modeling typical pier cap and column structures, the designer should assume fixity at tops of footings. For footing analysis and design the designer should create a second structural model, conservatively assuming the pier columns extend to bottoms of footings. If a column moment is magnified more than 25 percent at the column bottom, the column magnification factor shall be applied to the moment on the footing.

Nominal bearing resistances (R_n) at the service and strength limit states shall be as recommended by the Soils Design Unit.

Resistance factors for the service, strength, and extreme event limit state shall be taken from the AASHTO LRFD Specifications [AASHTO-LRFD 10.5.5].

Spread footings for abutments and piers shall be founded on sound rock and notched into rock as shown in Figure 6.4.4.2. On hard rock, the excavation shall be at least 12 inches deep and to neat lines of the footing. On soft rock, a footing shall extend at least 18 inches into the rock, with the final 12 inches of the excavation to neat lines of the footing.

Limestone and cemented sandstone are considered hard rock. Shale, uncemented siltstone, and uncemented sandstone are considered soft rock. This classification is subject to the judgment of the Soils Design Unit. By standard penetration test blow count, rock generally is classified as hard when blow counts are above 200.

Spread footings should be sized for eccentric loading at the strength limit state and checked for bearing at the service and strength limit states [AASHTO-LRFD C10.6.3.2.1].

For spread footings on rock the eccentricity of the loading at the strength limit state shall not exceed 0.45 of the footing dimension in any direction [AASHTO-LRFD 10.6.3.3].

Spread footings shall be designed by the strength design method [AASHTO-LRFD Section 5].

A spread footing shall be sufficiently thick so that the footing does not require punching shear or beam shear reinforcement.

For punching shear, the designer shall use the maximum average pressure resulting from factored vertical load (P_u) at the strength limit state.

For beam shear or moment, the designer may deduct the appropriate factored downward forces of the soil and footing, considering buoyant effects if applicable, from the factored upward forces exerted by rock.

For beam shear the designer shall use the factored bearing resistance (φR_n) at the strength limit state applied uniformly over the projecting portion of the footing. In cases where this pressure is too severe a design condition the design pressure may be reduced to the trapezoidal distribution resulting from analysis, with approval of the supervising Unit Leader. Ordinarily the designer should determine the concrete shear resistance by the sectional design model Method 1 [AASHTO-LRFD 5.7.3.4.1] where the method is applicable. However, the designer shall use Method 2 [AASHTO-LRFD 5.7.3.4.2] if required and may use Method 2 if it provides a significant advantage in minimizing footing thickness.

For checking distribution of reinforcement for crack control the designer shall use the controlling service limit state moment and the Class 1 exposure factor [AASHTO-LRFD 5.6.7].

For design of moment steel in the bottom of the footing, the designer shall use the maximum footing toe pressure resulting from factored vertical load and moment (P_u, M_u) at the strength limit state and apply the pressure uniformly over the projecting portion of the footing.

Reinforcing shall be provided in the top of a spread footing subjected to uplift.

The designer need not provide shrinkage and temperature reinforcement or skin reinforcement on the surfaces of a footing that otherwise would be unreinforced unless the footing thickness exceeds 5 feet. If the footing thickness exceeds 5 feet, the designer shall provide shrinkage and temperature reinforcement for mass concrete on sides and top of the footing [AASHTO-LRFD 5.10.6].

Many factors such as mix design, mix placement temperatures, mix geometry, ambient conditions, and curing methods can affect the thermal behavior of concrete. Based on the Bureau's long-standing experience with mass concrete using typical mixes, materials, and construction practices in Iowa, the

designer shall apply IDOT Developmental Specifications for Mass Concrete – Control of Heat of Hydration, when the least dimension of any element exceeds 4.5 feet. The designer also shall consult with the supervising Unit Leader or Bridge Project Development Engineer regarding mass concrete notes to be placed on the plans for controlling and monitoring concrete mix temperatures.

The designer need not check fatigue of reinforcement in a spread footing on rock.

6.4.4.2 Detailing

For spread footings notched into rock the limits for Class 22 excavation shall be as given in the figure note in Figure 6.4.4.2.

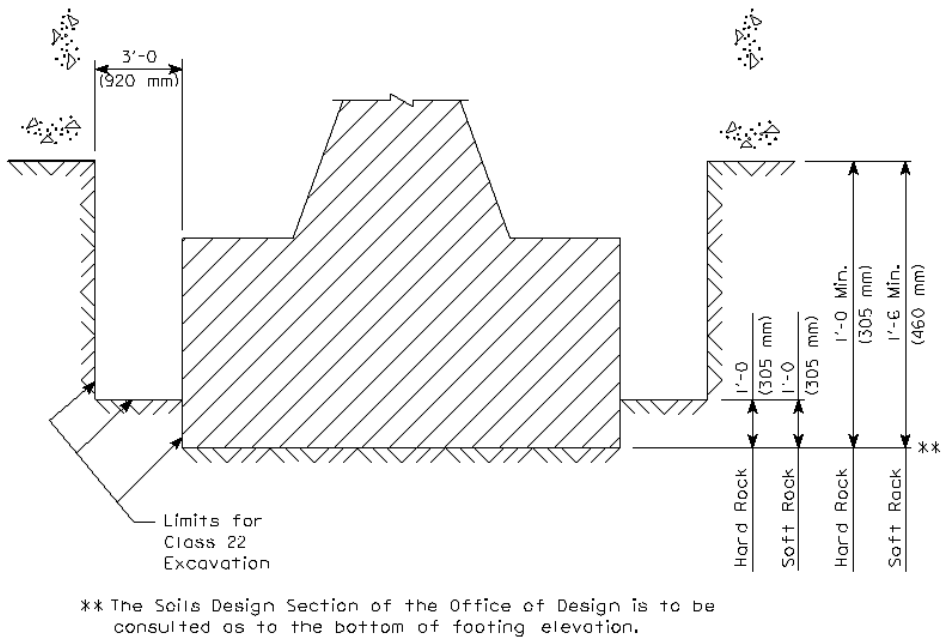

Figure notes:

- The lower portion of the notch into rock shall be to neat lines.

Figure 6.4.4.2. Footing placement on rock and limits for Class 22 excavation

The nominal bearing resistance at the service limit state and at the strength limit state shall be indicated in a note on the bridge plans.

The Bureau prefers that moment reinforcing in spread footings be developed with straight bar lengths rather than hooks. If straight bar lengths cause excessive enlargement of a footing the designer may consider hooks.

When detailing horizontal construction joints such as the joint between column and footing, the designer shall assume the ends of vertical bars rest on the construction joint and determine the bar lengths accordingly.

6.4.5 Footings on soil

6.4.5.1 Analysis and design

[AASHTO-LRFD 10.6.1.2, 10.6.3.3, Section 11]

Spread footings subject to frost heave shall have a bottom elevation a minimum of 4 feet below ground line [AASHTO-LRFD 10.6.1.2].
For spread footings on soil and designed by the AASHTO LRFD Specifications, the eccentricity of the resultant of pressure on the base of footing at the strength limit state shall not exceed one-third of the footing dimension in any direction [AASHTO-LRFD 10.6.3.3].

Spread footings on soil that support retaining walls shall be designed in accordance with the AASHTO LRFD Specifications section on retaining walls [AASHTO-LRFD Section 11].

6.4.5.2 Detailing

Reserved

C6.4 Spread footings

C6.4.4 Footings on rock

C6.4.4.1 Analysis and design

Historic Presumptive Bearing Capacities on Rock
Historically, Iowa specified the use of two separate presumptive bearing capacities for spread footings on rock based on the classification of the rock as soft rock or hard rock. Shale, uncemented siltstone, and uncemented sandstone were generally considered to be soft rock. Limestone and cemented sandstone were generally considered to be hard rock. By standard penetration test blow count, rock generally was classified as hard rock when blow counts were above 200. This classification was subject to the judgment of the Soils Design Unit. The ASD bearing capacities for soft rock, such as shale, were typically 5 tsf and for hard rock, such as limestone, were 10 tsf. These ASD capacities were presumptive values which have their origin in the AASHTO Standard Specifications (the 1983 specification and earlier lists presumptive values).

Around 2007 the Bureau moved to an interim LRFD procedure that fitted the ASD presumptive values to LRFD using an approximate average load factor of 1.45 and a strength resistance factor of 0.45 for spread footings on rock from AASHTO LRFD Table 10.5.5.2.2-1.

Conversion of bearing capacity from ASD to LRFD for soft rock:
LRFD Nominal Resistance = (5 tsf)*(1.45)/(0.45) = 16.1 tsf = 32.2 ksf
LRFD Factored Resistance = (0.45)*(32.2 ksf) = 14.5 ksf

Conversion of bearing capacity from ASD to LRFD for hard rock:
LRFD Nominal Resistance = (10 tsf)*(1.45)/(0.45) = 32.2 tsf = 64.4 ksf
LRFD Factored Resistance = (0.45)*(64.4 ksf) = 29.0 ksf

The spread footing designs contained in the H-standards are still based on the interim LRFD bearing resistance for soft rock per the plan note:

> The foundation rock shall have a minimum LRFD nominal bearing resistance of 30 kips per square foot (allowable service load bearing value of at least 10 kips per square foot).

2010 ~ Location of Fixity for Frame and T-Piers on Spread Footings
Column analysis and design is sensitive to slenderness, and the designer should not model a column taller than the structural configuration allows. Although it would be acceptable to model a pier column as fixed at 2 feet below top of footing or at mid-depth of footing, the column is restrained significantly at the top of footing, and the designer should assume fixity at that elevation to minimize slenderness. Available pier software makes it relatively easy to analyze alternate models, and for pile and footing design the designer should assume pier columns extend to bottoms of footings.

TABLE OF CONTENTS ~ ABUTMENTS

6.5 Abutments
6.5.1 General
6.5.1.1 Policy overview
6.5.1.1.1 Integral
6.5.1.1.2 Stub
6.5.1.2 Design information
6.5.1.3 Definitions
6.5.1.4 Abbreviations and notation
6.5.1.5 References
6.5.2 Loads
6.5.2.1 Dead
6.5.2.2 Live
6.5.2.3 Dynamic load allowance
6.5.2.4 Centrifugal
6.5.2.5 Braking force
6.5.2.6 Earth pressure
6.5.2.7 Live load surcharge
6.5.2.8 Earthquake
6.5.3 Load application
6.5.3.1 Limit states
6.5.3.2 Integral abutments
6.5.3.3 Stub abutments
6.5.4 Abutment analysis, design, and detailing
6.5.4.1 Integral abutments
6.5.4.1.1 Analysis and design
6.5.4.1.2 Detailing
6.5.4.2 Stub abutments
6.5.4.2.1 Analysis and design
6.5.4.2.2 Detailing
6.5.4.3 Wing walls
6.5.4.3.1 Analysis and design
6.5.4.3.2 Detailing

6.5 Abutments

6.5.1 General

Abutments for typical Iowa bridges are founded on piles driven to bearing in soil or rock, on drilled shafts, or on footings notched into rock. In addition to this series of articles, the designer should review information for the applicable foundation type: piles [BDM 6.2], drilled shafts [BDM 6.3], or spread footings [BDM 6.4]. The designer also should review the pier section [BDM 6.6] for load policies that affect abutments. BDM 6.1.6 should also be reviewed especially for situations where shallow bedrock is anticipated.

6.5.1.1 Policy overview

Abutments generally serve three purposes: to provide support for the bridge superstructure, to retain the road embankment, and to provide support for the end of the approach pavement. For support of typical superstructures the Bureau selects between three types of abutments: integral, semi-integral, and stub. Integral and semi-integral abutments with jointless bridge decks are preferred wherever feasible with integral abutments preferred over semi-integral abutments.

Integral abutments are placed on vertical piles with sufficient flexibility so that the superstructure can contract with shrinkage and expand or contract with changes in temperature. Similarly, semi-integral abutments allow for the superstructure movement to occur within the upper part of the abutment which slides on the fixed bottom portion that is placed on piles, drilled shafts, or footings on rock. Stub abutments also are placed on piles, drilled shafts, or footings on rock are relatively fixed in position, and superstructure movements must be accommodated with expansion bearings at the abutments and joints in the bridge deck. The standard integral, semi-integral and stub abutments retain soil only near the top of shallow-slope embankments and are not suitable for steep embankments.

For ordinary pretensioned prestressed concrete beam (PPCB), continuous welded plate girder (CWPG), continuous concrete slab (CCS), and rolled steel beam (RSB) bridges without special aesthetic requirements, the Bureau prefers integral abutments supported on vertical steel H-piles or timber piles. To facilitate the design of typical PPCB bridges the Bureau has prepared integral abutment designs with H-piles for skews from 0 to 30 degrees and makes those designs available on standard sheets. The standard sheet designs are applicable for bridge lengths and skews within the limits covered in this manual [BDM 6.5.1.1.1] and are based on the performance of Iowa integral abutments. Although the dimensions, reinforcing, details, and notes on the standard sheets generally are suitable for use, the designer shall check the information for each project and provide corrected and completed sheets for each bridge plan set. Use of integral abutments beyond the stated limits in this manual [BDM 6.5.1.1.1] requires approval of the Chief Structural Engineer.

In most cases where abutment foundations are placed directly on rock or are placed on drilled shafts, the Bureau prefers semi-integral abutments over stub abutments.

The Bureau has not set a formal policy on limits for semi-integral abutments. However, with designer verification, the maximum permissible length limit for semi-integral abutments for skews up to 45 degrees are generally assumed to be equivalent to those given for integral abutments at a 0-degree skew. Currently there are no published standard working details available for semi-integral abutments, however, the BSB does have a limited set of draft standards it can provide as a starting point.

For ordinary PPCB bridges for which integral or semi-integral abutments are not feasible due to bridge length, end span length, or skew, the Bureau provides standard sheets for stub abutments supported on H-piles to be used with expansion bearings and deck expansion joints. The standard stub abutments have two rows of piles, one row driven vertically and one row battered inward at a 1 horizontal to 4 vertical slope. Although the dimensions, reinforcing, details, and notes on the standard sheets generally are suitable for use, the designer shall check the information for each project and provide corrected and completed sheets for each bridge plan set.

For the typical Iowa bridge there is adequate space for a relatively shallow embankment slope, and the abutment will need to retain soil only near the top of the embankment. However, when clearances or site conditions require a steep elevation change at the end of the bridge, the bridge abutment must be designed to retain a considerable amount of embankment soil. In all cases the embankment stability needs to be considered along with the requirements for support of the bridge superstructure and approach pavement.

Although the Bureau follows AASHTO LRFD Specifications, the Bureau interprets the basic specifications when designing abutments and specifies rules for detailing of abutment components. Longitudinal and transverse loads need to be coordinated with the corresponding loads for piers, and the designer shall consult the pier articles in this manual [BDM 6.6.2 and 6.6.3] to ensure that loading is correct for the entire bridge substructure.

This series of articles on abutments covers most typical designs but does not cover special bridge designs for signature bridges or long-span bridges. The designer is cautioned that steep ground elevation changes, aesthetic requirements, and other factors may require abutments designed differently from the standard abutments.

6.5.1.1.1 Integral

In order to minimize construction and maintenance costs the Bureau prefers integral abutments.

Based on common Iowa soils, research conducted by Iowa State University under Iowa DOT Projects HR-273 and HR-399, and parameter studies [BDM C6.5.1.1.1], the Bureau has established the bridge length limits for use of standard integral abutments given in Tables 6.5.1.1.1-1 for PPCB bridges and 6.5.1.1.1-2 for CWPG bridges. The length limits and pile structural resistances in the tables are based on the following conditions.

- The bridge has approximately parallel abutments and piers at skews not exceeding 45 degrees.
- The bridge is straight or horizontally curved with straight beams or girders.
- The bridge is horizontally curved with curved steel girders subject to the following additional limits:
    - The minimum curve radius is 900 feet.
    - The maximum bridge width is 44 feet from gutter line to gutter line.
- Integral abutments are placed at both ends of the bridge. If a working integral abutment is feasible at only one end of a bridge, the maximum length for the bridge shall be one-half the limit in the table, with no change in maximum end span length.
- All abutment piles for typical projects are HP 10x57 of ASTM A 572/A 572M Grade 50 steel. If HP 10x57 piles have insufficient structural resistance the designer may substitute an alternate shape with $b_f/2t_f \leq 10.5$: HP 12x74, HP 12x84, HP 14x102 if available, or HP 14x117. The resistance for the alternate shape shall be extrapolated based on relative cross sectional area of alternate pile with respect to the area of an HP 10x57.
- For bridges with skews greater than 30 degrees, piles shall be oriented for weak axis bending with pile webs perpendicular to centerline of roadway. At lesser skews, pile webs should be oriented parallel with the abutment.
- The nominal structural resistance values in the table have been limited to Structural Resistance Level – 2 [BDM Table 6.2.6.1-1]. (The overall abutment pile design also may be limited by geotechnical resistance.)
- All abutment piles for bridges longer than 130 feet are placed in prebored holes a minimum of 10 feet deep and filled with bentonite slurry. (Prebored holes need not be used for bridges 130 feet or less in length.) Bentonite slurry is assumed to provide no bearing capacity or lateral support for the piles.
- Bedrock is not closer than 15 feet below bottom of abutment footing. Shorter piles require approval of the Chief Structural Engineer and may require rock coring and special details. See commentary for additional information.
- Setting factors of 1.50 for PPCB bridges and 1.33 for CWPG bridges magnify thermal movement. The setting factors provide for abutment construction temperatures of 25 to 75 degrees-F (-4 to 24 degrees-C).
- The controlling design condition is either (a) combined forces at the top of the pile at the strength limit state (F_y = 50 ksi) or (b) ductility. (The axial force at the bottom of the pile [BDM 6.2.6.1] also needs to be considered in the overall abutment pile design.)
- Because the limits in Tables 6.5.1.1.1-1 and 6.5.1.1.1-2 are more liberal than past limits, exceptions to these guidelines are not encouraged. For bridges that exceed these limits, request an exception from the Chief Structural Engineer.

Table 6.5.1.1.1-1. Maximum bridge length and axial structural resistance for Grade 50 HP 10x57 (HP 250x85) in PPCB bridges with integral abutments

Maximum multiple span bridge length, feet (7)	Bridge skew, degrees (3)	Prebore depth, feet (3)	Nominal HP 10x57 (6) axial structural resistance, kips				
				BTB beam, 105-foot end span (4) (5)	BTC beam, 120-foot end span (4) (5)	BTD beam, 135-foot end Span (4) (5)	BTE beam, 155-foot end span (4) (5)
575 (1)	0	10		324	365	365	365
		15		365	365	365	365
525	15	10		243	324	365	365
		15		324	365	365	365
475	30 (2)	10		203	243	324	324
		15		243	324	365	365
425	45 (2)	10		203	243	324	324
		15		243	324	365	365

Table notes:

(1) At this length and for a bridge fixed at mid-length, thermal movement at its ends will be limited to about 1.55 inches each way. A BE pavement expansion joint [DB SRP BR-series] will be required at each end of the bridge.

(2) At skews greater than 30 degrees, piles shall be oriented for weak axis bending, with webs perpendicular to centerline of roadway.

(3) The designer may interpolate for intermediate skews and prebore depths. (Prebored holes are not required for bridge lengths less than 130 feet.)

(4) For end spans shorter than the maximum, the designer may increase the resistance by the ratio of maximum end span/shorter end span, not to exceed 365 kips. The maximum beam length also is the maximum single span length.

(5) Based on site conditions the nominal geotechnical resistance per pile may be less than the nominal structural resistance per integral abutment pile given in this table. Both structural and geotechnical checks are required.

(6) Alternate H-pile shapes with $b_f/2t_f \leq 10.5$ may be used. Resistances may be extrapolated based on relative cross sectional area of alternate pile with respect to the area of an HP 10x57.

(7) Maximum bridge length in the table assumes the thermal origin of the bridge is at the center of the bridge. For bridges with thermal origins not located at the center of the bridge the designer shall compare a modified bridge length to the value in the table in order to determine if integral abutments may be used. The modified bridge length shall be calculated based on the following formula: 2 * (Distance from thermal origin to furthermost abutment).

An integral abutment example demonstrating use of the table above is given in the commentary [BDM C6.5.1.1.1].

Table 6.5.1.1.1-2. Maximum bridge length and axial structural resistance for Grade 50 HP 10x57 in straight and curved girder CWPG bridges with integral abutments

Maximum length, feet (7)	Bridge skew, degrees (3)	Prebore depth, feet (3)	Maximum end span, feet (4) (5)	Nominal HP 10x57 (6) axial structural resistance, kips
400 (1)	0	10	150	284
		15	150	324
367	15	10	145	243
		15	150	284
333	30 (2)	10	120	243
		15	140	243
300	45 (2)	10	120	243
		15	140	243

Table notes:

(1) At this length and for a bridge fixed at mid-length, thermal movement at its ends will be limited to about 1.55 inches each way. A BE pavement expansion joint [DB SRP BR-series] will be required at each end of the bridge. Narrower pavement expansion joints are appropriate for shorter bridge lengths.

(2) At skews greater than 30 degrees, piles shall be oriented for weak axis bending, with webs perpendicular to centerline of roadway.

(3) The designer may interpolate for intermediate skews and prebore depths. (Prebored holes are not required for bridge lengths less than 130 feet.)

(4) For end spans shorter than the maximum, the designer may increase the resistance by the ratio of maximum end span/shorter end span, not to exceed 365 kips.

(5) Based on site conditions the nominal geotechnical resistance per pile may be less than the nominal structural resistance per integral abutment pile given in this table. Both structural and geotechnical checks are required.

(6) Alternate H-pile shapes with $b_f/2t_f \leq 10.5$ may be used. Resistances may be extrapolated based on relative cross sectional area of alternate pile with respect to the area of an HP 10x57.

(7) Maximum bridge length in the table assumes the thermal origin of the bridge is at the center of the bridge. For bridges with thermal origins not located at the center of the bridge the designer shall compare a modified bridge length to the value in the table in order to determine if integral abutments may be used. The modified bridge length shall be calculated based on the following formula: 2 * (Distance from thermal origin to furthermost abutment).

For a single span welded plate girder bridge the maximum length is the maximum end span associated with the skew and prebore depth in the table above [BDM Table 6.5.1.1.1-2].

In cases where a mechanically stabilized earth (MSE) retaining wall is used near an integral abutment, each pile shall be sleeved with a corrugated metal pipe (CMP) to the bottom of the MSE wall to control compaction near the pile as the embankment and MSE wall are built. The CMP sleeve should be at least as long as the required prebore and, if longer than the prebore, shall be filled with sand to the elevation of the bottom of prebore and then with bentonite to the top of the CMP sleeve.

The CMP sleeve shall be spaced to allow for compaction between sleeves and shall have adequate clearance to the back of the MSE wall [BDM 6.2.4.1]. At the top, the CMP sleeve shall be blocked temporarily with framing lumber so that the pile remains at the center of the sleeve during placement and compaction of the backfill. The top of the CMP also shall be detailed to slip as the bottom of the abutment moves during the service life of the bridge.

If an integral abutment is situated within an MSE reinforced zone, the backfill shall be the same material as placed for the MSE wall, and it shall be placed in lifts and compacted in the same way as the MSE wall backfill material. Flooding as described on standard sheets [BSB SS 1007D, 1007E] shall not be used,

and the designer shall include a note on the plans prohibiting placement of the backfill by flooding. The geotextile fabric, porous backfill, and abutment subdrain shall be placed as usual.

If soils at an integral abutment are very soft (N_{60}-values less than 5 for granular soils or less than 3 for clay soils) for a depth of more than 20 feet below the abutment, the piles may have inadequate lateral support from the soil. For this soft soil condition the designer shall check to ensure that the abutment piles have sufficient resistance for the factored load at maximum thermal movement of the abutment and with consideration of any prebored holes. Iowa State University research reports [BDM 6.5.1.5] and software such as LPILE can facilitate the check.

Integral abutments for PPCB bridges detailed on standard sheets [BSB SS 2078-2091] include the following components:

- A continuous corbel for support of the approach slab;
- A note requiring protection for the end of the bridge deck or backwall during construction. If the approach slab will not be in the contract then a paving block detail shall be included in the bridge plans;
- Subdrains;
- A single line of piles, with an additional pile under each wing extension when wings extend more than 7 feet behind the abutment;
- A reinforced abutment cap beam-diaphragm to distribute superstructure loads to piles and resist active and passive earth pressures;
- Spiral reinforcing at each pile head;
- A seat for prestressed beams, steel girders, concrete slab, or rolled steel beams;
- Continuity reinforcement to provide a rigid connection between abutment and superstructure; and
- Wings for retaining soil at the top of a shallow-slope embankment.

See Figure 6.5.1.1.1 for a typical section through an integral abutment for a CWPG bridge. Note that for bridges with skews of 30 degrees or less, H-piles are rotated to align the pile webs with the centerline of abutment bearings. At skews above 30 degrees, piles shall be aligned with pile webs perpendicular to centerline of roadway.

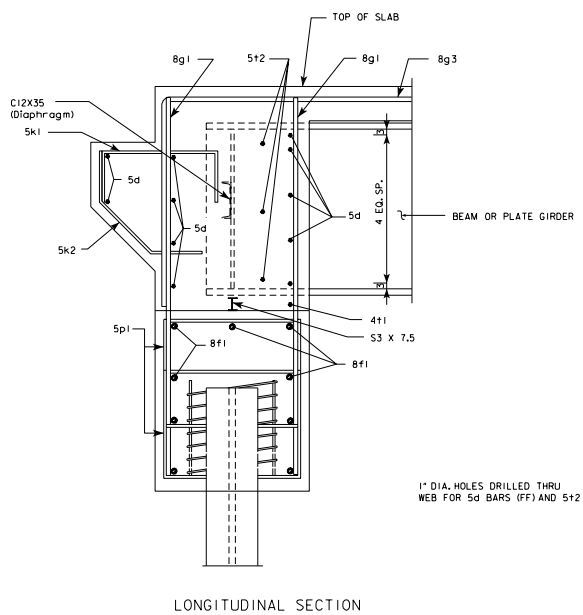

Figure 6.5.1.1.1. Integral abutment section for a steel girder bridge

Integral abutments also should be used with continuous concrete slab (CCS) bridges as indicated in the J-series standards. The J40-25 and J44-25 standards were updated on April 2016 to include an approach slab [OD SRP BR-205] which is tied to the integral abutment using stainless steel reinforcement. If the designer needs to alter a standard design or design a special CCS bridge, the designer shall follow these guidelines for the use of integral abutments:

- Use HP 10x42 piles, with 10-foot prebored holes for bridge lengths greater than 130 feet.
- Limit pile axial load to Structural Resistance Level – 1 [BDM Table 6.2.6.1-1].
- Limit end span length to 45.5 feet.
- At 0-degree skew, limit bridge length to 400 feet, and at 45-degree skew limit bridge length to 300 feet. The maximum length at intermediate skews may be interpolated, but the designer shall not use integral abutments for a CCS bridge skewed more than 45 degrees.

The Bureau policy of allowing timber piles in integral abutments for bridge lengths to 200 feet and skews to 30 degrees remains in effect for PPCB, CWPG, CCS, and rolled steel beam (RSB) bridges.

The Bureau has three-span CCS bridge standards. See those standards for the appropriate steel HP shape and integral abutment details. When altering any of the bridge standards for special integral abutment situations the designer shall consult with the supervising Unit Leader.

6.5.1.1.2 Stub

For relatively long or highly skewed bridges that do not meet the integral abutment guidelines in Tables 6.5.1.1.1-1 and 6.5.1.1.1-2 and that do not need to retain significant heights of embankment, and it has been determined that semi-integral abutments are not feasible, the Bureau has designed standard stub abutments. Stub abutments for PPCB bridges detailed on standard sheets [BSB SS 2092-2105] include the following components:

- A continuous corbel for support of the approach slab;
- A note requiring protection for the end of the bridge deck or backwall during construction. If the approach slab will not be included in the contract then a paving block detail shall be included in the bridge plans;
- Stainless steel dowels for tying the approach pavement to the bridge;
- Subdrains;
- A double line of piles, with an additional pile under each wing extension when wings extend more than 7 feet behind the abutment;
- A backwall (maskwall) to retain soil below the approach slab;
- Seats for prestressed beams, with wash sections for drainage between beam seats;
- A tapered lower section widened to accept vertical and battered piles; and
- Wings for retaining soil at the top of a shallow-slope embankment.

See Figure 6.5.4.2.1 for a section through a typical stub abutment.

The standard sheets detail steel piles, but the designer should note that if timber piles are used, spiral reinforcing should be placed at each timber pile head [BDM Table 6.2.5].

For bridge projects that require stub abutments with mechanically stabilized earth (MSE) retaining walls the designer shall use the following guidelines:

- The front row of piles shall be battered unless the batter increases the bridge length by more than five feet due to the interference with the MSE wall.
- The centerline of the piling shall be a minimum of three feet from the face of the MSE wall at the bottom of the MSE wall.
- Corrugated metal pipes (CMP) will not be required around the individual piles unless downdrag forces are a problem. CMP may be provided to reduce downdrag forces in these situations. Consult with the supervising Unit Leader.
- Provide CADD Note E55/M55 [BDM 13.2.2] in the plans requiring the contractor to tie the abutment piling group together and provide anchorage for the pile group to prevent shifting of the

piles during backfilling. The note may be modified for special cases, such as partial driving, addition of tie backs, or if additional rows of piles are required for the abutments.
- If possible, the front and back row of piles should be in alignment to provide more room for MSE straps.
- If a stub abutment is situated within an MSE reinforced zone, the backfill shall be the same material as placed for the MSE wall, and it shall be placed in lifts and compacted in the same way as the MSE wall backfill material. Flooding as described on standard sheets [BSB SS 1007D, 1007E] shall not be used, and the designer shall include a note on the plans prohibiting placement of the backfill by flooding. The geotextile fabric, porous backfill, and abutment subdrain shall be placed as usual.

6.5.1.2 Design information

The bridge soils design package provided for each bridge site by the Soils Design Unit contains recommendations for abutment foundation type and contains the soil logs needed for design. Most Iowa bridge abutments are placed on piles that derive support from friction and end bearing. Design of piles shall be in accordance with the Piles Section [BDM 6.2] and “LRFD Pile Design Examples ~ 2013”, as applicable.

Standard abutment footings supported by piles should have a bottom elevation 2 feet below berm elevation [BSB SS 2092-2105]. Abutment footings subject to frost heave are required to have a bottom elevation a minimum of 4 feet below ground line.

Generally, abutment foundations near streams and rivers are protected by riprap or other means but, for unprotected abutment foundations near stream or river channels, the Bureau requires the designer to consider scour and to check unsupported pile length as for piers [BDM 6.6.4.1.3.1].

6.5.1.3 Definitions

[AASHTO-LRFD 3.3.2]

Mass concrete is defined by ACI as “any volume of concrete with dimensions large enough to require that measures be taken to cope with generation of heat from hydration of the cement and attendant volume change to minimize cracking.”

Substructure is any construction below the bearing seats or, in the absence of bearings, below the soffit of the superstructure.

Unit Leader is the supervisor of the Bridges and Structures Bureau Preliminary Bridge Design Unit, Final Design Unit, or Consultant Coordination Unit.

6.5.1.4 Abbreviations and notation

[AASHTO-LRFD 3.3.2, C3.4.1, 3.10.4.2]

A_s, peak seismic ground acceleration coefficient modified by short-period site factor [AASHTO-LRFD 3.10.4.2]
CCS, continuous concrete slab
CE, vehicular centrifugal force [AASHTO-LRFD 3.3.2]
CMP, corrugated metal pipe
CWPG, continuous welded plate girder
DC1, non-composite dead load of structural components and nonstructural attachments such as girders, deck, haunches, diaphragms, and cross frames [AASHTO-LRFD 3.3.2].
DC2, composite dead load of structural components and nonstructural attachments such as barrier rails and sidewalks, curbs, and medians that are not part of the initial deck pour [AASHTO-LRFD 3.3.2].
DW, dead load of wearing surfaces and utilities [AASHTO-LRFD 3.3.2].
EH, horizontal earth pressure load [AASHTO-LRFD 3.3.2]

HPC, high performance concrete
IM, Vehicular dynamic load allowance [AASHTO-LRFD 3.3.2]
LL, vehicular live load [AASHTO-LRFD 3.3.2]. For abutments it is the HL-93 load arranged for maximum effect and multiplied by number of lanes and by multiple presence factor, applied vertically at center of bearings.
LS, live load surcharge [AASHTO-LRFD 3.3.2]

N_{60} or N_{60}-value, standard penetration test number of blows per foot corrected to a hammer efficiency of 60%. N_{60} also may be given as **SPT N_{60}-value.** The Iowa DOT is in the process of changing specifications and determining hammer calibrations so that N_{60} values will be reported. Until N_{60} values are available the designer may follow past practice and use uncorrected N-values. See the pile commentary discussion [BDM C6.2.1.4].
PPCB, pretensioned prestressed concrete beam
RSB, rolled steel beam
S_{D1}, horizontal response spectral acceleration coefficient at 1.0-sec. period modified by long-period site factor [AASHTO-LRFD 3.10.4.2]
γ_{EQ}, load factor for live load applied simultaneously with seismic loads [AASHTO-LRFD C3.4.1]

6.5.1.5 References

Abendroth, R.E. and Greimann, L.F. *Field Testing of Integral Abutments, Final Report HR-399,* Ames: Center for Transportation Research and Education (CTRE), Iowa State University, 2005. (Available online at https://iowadot.gov/research/reports/Year/2005/fullreports/hr399.pdf).

American Concrete Institute (ACI). Guide to Mass Concrete (ACI 207.1R-05) 2012.

Dirks, Kermit and Patrick Kam. *Foundation Soils Information Chart, Pile Foundation*. Ames: Iowa Department of Transportation, Office of Road Design, 1994. (a.k.a. **Blue Book**) Generally with the move to LRFD, the ASD-based Blue Book is out-of-date, and its contents have been revised and moved to the BDM. The Blue Book is available from the Soils Design Unit of the Design Bureau.

Greimann, L.F., B.P. Phares, Y. Deng, G. Shryack and J. Hoffman. *Field Monitoring of Curved Girder Bridges with Integral Abutments, Final Report,* FHWA Pooled Fund Study TPF-5(169), Iowa State University InTrans Project 08-323, January 2014. (Available online at https://intrans.iastate.edu/app/uploads/2018/03/curved_girder_integral_abutments_w_cvr.pdf).

Greimann, L.F., R.E. Abendroth, D.E. Johnson, and P.B. Ebner. *Final Report, Pile Design and Tests for Integral Abutment Bridges, HR-273, and Addendum.* Ames: Iowa Department of Transportation and College of Engineering, Iowa State University, 1987. (Available online at https://iowadot.gov/research/reports/Year/2003andolder/fullreports/hr273.pdf).

6.5.2 Loads

Load application to abutments must be considered with respect to the entire substructure. The pier section [BDM 6.6] covers the full range of loads in detail, and the designer should review that section in addition to the topics included under this article.

6.5.2.1 Dead

[AASHTO-LRFD 3.5.1]

The Bureau classifies dead load as follows.

- DC1 is noncomposite dead load including beams or girders, deck, haunches, diaphragms, and cross frames.
- DC2 is composite dead load including barrier rails and sidewalks, curbs, and medians that are not part of the initial deck pour.
- DW is composite dead load of wearing surfaces and utilities.

Unit weight of concrete shall be taken at 0.150 kcf regardless of concrete strength. Other weights not specified in this manual may be taken from the AASHTO LRFD Specifications [AASHTO-LRFD Table 3.5.1-1].

For a typical bridge the Bureau requires a future wearing surface load of 0.020 ksf, which is part of the DW load.

For determining typical bridge abutment loads the Bureau assumes that end spans are simply supported for PPCB DC1 load and assumes that end spans are continuous for PPCB DC2 and DW and all CWPG and RSB dead loads.

The Bureau makes no special transverse distribution rules for superstructure dead loads and simply places the total dead load on the group of abutment piles, excluding any wing extension piles.

In a change from past practice the Bureau now requires that the dead load from reinforced concrete approach pavement be included as an abutment load. For abutment design the approach pavement may be assumed to span a 12-foot void, which will result in 6 feet of DC1 approach pavement load to the abutment.

6.5.2.2 Live

[AASHTO-LRFD 3.6.1]

Unless special requirements govern the design, vehicular live load (LL) for abutments shall be HL-93 [AASHTO-LRFD 3.6.1.2]. It shall be applied as discussed in the AASHTO LRFD Specifications [AASHTO-LRFD 3.6.1.3].

In unusual situations identified by the Chief Structural Engineer, where a bridge will experience a high percentage of truck traffic, accumulation of trucks due to traffic flow control, or special industrial loads, the designer will need to consider additional loading as discussed in the AASHTO LRFD Specifications commentary [AASHTO-LRFD C3.6.1.2.1, C3.6.1.3.1]. In these situations the designer shall consult with the Chief Structural Engineer.

The number of design lanes shall be determined according to the AASHTO LRFD Specifications [AASHTO-LRFD 3.6.1.1.1].

For design of abutments in PPCB bridges, CWPG bridges, CCS bridges similar to J-series standards, and RSB bridges, the designer shall apply the live load for maximum effect assuming continuity of beams and girders, except at expansion joints [BDM Table 5.4.1.4.1.1, 5.5.2.4.1.1]. Modification due to multiple presence of live load also shall be considered [AASHTO-LRFD 3.6.1.1.2].

In a change from past practice the Bureau now requires that live load on reinforced concrete approach pavement be included as an abutment load. The approach pavement may be assumed to span a 12-foot void. In all cases the designer shall arrange the HL-93 lane and truck or tandem load for maximum effect. Except for uplift the maximum effect typically will be achieved with lane load on both the approach pavement and bridge but with truck or tandem on either the pavement or on the bridge.

Sidewalk and other live loads shall be added to the vehicular live load when applicable. A pedestrian live load (PL) of 0.075 ksf shall be applied to all sidewalks wider than 2.0 feet [AASHTO-LRFD 3.6.1.6] and considered simultaneously with the vehicular live loads.

The Bureau makes no special transverse distribution rules for superstructure live loads and simply places the total live load on the group of abutment piles, excluding any wing extension piles.

6.5.2.3 Dynamic load allowance

[AASHTO-3.6.2.1]

The dynamic load allowance (IM) shall be determined and applied to truck or tandem loads in accordance with the AASHTO LRFD Specifications [AASHTO-LRFD 3.6.2.1].

The IM shall be applied to the design of the following abutment components:

- The portion of an abutment above the cap beam or footing,
- The cap beam for an integral abutment when piles below are in prebored holes, and
- Piles in prebored holes for an integral abutment.

The IM shall not be applied to the design of the following abutment components:

- Cap beam or footing for a stub abutment,
- Piles in prebored holes for a stub abutment,
- Piles being checked for scour; and
- Drilled shafts below footings.

6.5.2.4 Centrifugal

[AASHTO-LRFD 3.6.3]

For a curved bridge the designer shall apply centrifugal force (CE) in any load combination that includes HL-93 live load and should not apply that live load without centrifugal force. Centrifugal force shall be determined according to the AASHTO-LRFD Specifications [AASHTO-LRFD 3.6.3] with the exceptions discussed below. In most cases the centrifugal force on an abutment for a horizontally curved bridge will be small and easily carried by the abutment foundation.

Design speed shall be taken as listed for the appropriate highway classification in Article 1C-1 of the Design Bureau's Design Manual unless otherwise given in specific bridge design criteria prepared by the Preliminary Bridge Design Unit or Consultant Coordination Unit. Depending on the highway classification the Design Manual gives design speeds from 70 mph to 30 mph.

The number of lanes loaded for CE shall be tied to the number of lanes loaded for live load. The force shall not be redistributed to another substructure component.

The supervising Unit Leader has the final authority for determining whether to apply centrifugal force for unusual bridge configurations.

6.5.2.5 Braking force

[AASHTO-LRFD 3.6.4]

The braking force (BR) shall be determined according to the AASHTO-LRFD Specifications [AASHTO-LRFD 3.6.4] and the guidelines in the pier braking force article [BDM 6.6.2.4].

Assign half of the adjacent span braking force to an integral abutment.

For a stub abutment with steel reinforced elastomeric bearings, half of the adjacent span braking force may be assigned to the abutment [BDM 6.6.3.3.1]. However, if the abutment has friction acting bearings, braking forces tributary to the abutment shall be assigned to fixed substructure units, not to the stub abutment [BDM 6.6.3.3.3].

6.5.2.6 Earth pressure

[AASHTO-LRFD 3.11.5]

For design of stub abutment piles, the horizontal earth pressure load (EH) shall be applied to the abutment backwall. The equivalent fluid dead load pressure shall be the active pressure from soil with a unit weight of 0.125 kcf and an effective angle of internal friction of 1 vertical to 1.5 horizontal (33.69 degrees).

For non-standard abutments with significant soil retaining functions, follow guidelines in the AASHTO LRFD Specifications [AASHTO-LRFD 3.11].

6.5.2.7 Live load surcharge

[AASHTO-LRFD 3.11.6.4]

Live load surcharge (LS) needs to be considered for stub abutments assuming that the approach pavement is not supported on the abutment due to pavement or corbel failure. Soil for the surcharge shall be assumed to have a unit weight of 0.125 kcf. The equivalent height of soil representing the surcharge shall be taken from the AASHTO LRFD Specifications [AASHTO-LRFD Table 3.11.6.4-1].

Live load surcharge need not be considered for design of integral abutments.

6.5.2.8 Earthquake

[AASHTO-LRFD 3.10, 4.7.4.1, 4.7.4.4]

Based on the acceleration coefficient S_{D1} [AASHTO-LRFD 3.10.4.2] for Site Class A though E [AASHTO-LRFD 3.10.3.1], all of Iowa shall be classified as Seismic Zone 1 [AASHTO-LRFD 3.10.6] for design of typical bridges. For unusual cases where the site is classified as Site Class F and for Missouri River and Mississippi River bridges the designer shall determine the Seismic Zone based on the specific site characteristics.

Bridges in Seismic Zone 1 need not be analyzed for seismic forces (EQ) [AASHTO-LRFD 4.7.4.1]. However, connections that attach the superstructure to an abutment to restrain relative movement shall be designed for horizontal connection forces. The acceleration coefficient A_S [AASHTO-LRFD 3.10.4.2] will vary below and above 0.05 in Iowa, generally below in northern Iowa and above in southern Iowa. Therefore, the horizontal design connection force in restrained directions shall be taken as either 0.15 (if $A_s < 0.05$) or 0.25 (if $A_s \geq 0.05$) times the vertical reaction due to the tributary permanent load [AASHTO-LRFD 3.10.9.2]. The Bureau neglects any live load in determining the connection force, consistent with $\gamma_{EQ} = 0.0$ [AASHTO-LRFD C3.4.1].

For stub abutment at a deck expansion joint the designer shall provide the minimum bridge seat width for the expansion bearings [AASHTO-LRFD 4.7.4.4].

6.5.3 Load application

[AASHTO-LRFD 1.3.2, 3.4.1]

Load factors shall be adjusted by the load modifier, which accounts for ductility, redundancy, and operational importance [AASHTO-LRFD 1.3.2, 3.4.1]. For typical bridges the load modifier shall be taken as 1.0.

6.5.3.1 Limit states

[AASHTO-LRFD 3.4.1, 3.4.2]

For a typical integral or stub abutment the designer shall consider the following load combinations as they apply [AASHTO-LRFD 3.4.1].

- Strength I, superstructure with vehicles but without wind
- Service I, superstructure with vehicles and with design 3-second gust wind speed at 70 mph

For unusual abutments the designer may need to consider additional load combinations.

Except for unusual situations such as staged construction, the designer need not investigate construction load combinations [AASHTO-LRFD 3.4.2].

6.5.3.2 Integral abutments

For determining loads for integral abutments, assume that the HL-93 lane load can be present on both the approach and bridge while the truck or tandem is present only at one of the two locations. Place the lane load and truck or tandem in all lanes for maximum downward load on the abutment.

6.5.3.3 Stub abutments

For determining loads for stub abutments assume that the HL-93 lane load can be present on both the approach and bridge while the truck or tandem is present only at one of the two locations. However, because maximum uplift will occur with live load on adjacent spans, for checking uplift the lane load may be omitted from the end span. To consider the abutment loading if the approach pavement or corbel breaks, replace the lane load on the approach pavement with a live load surcharge (LS). Note also the following guidelines:

- The standard double reinforced concrete approach slab [OD SRP BR-series] may be assumed to span 12 feet.
- Only the Strength I and Service I limit states need to be considered for typical projects.
- If the truck or tandem is present on the approach, the lane load also must be present on the approach. Lane load on the bridge may have several arrangements for maximum effects, including uplift.
- If the truck or tandem is present on the bridge, the lane load also must be present on the bridge. The lane load may be present on the approach.
- If live load is arranged for uplift at the abutment, (1) truck or tandem and lane load may act vertically on the approach slab or (2) live load surcharge (LS) may act horizontally from the approach.
- If live load surcharge (LS) acts horizontally from the approach, only lane load or uplift may be on the bridge. Dead load of the approach pavement (DC) cannot be present.
- The approach pavement does not cause a surcharge. Horizontal earth pressure (EH) and live load surcharge (LS), when active, apply pressure beginning at the top pavement surface.
- Horizontal earth pressure (EH) is always active, but the pressure may be used with minimum or maximum load factors.
- Friction forces (FR), when in effect, can act in either direction. Friction forces are determined from superstructure dead load (DC and DW) and are not adjusted for dead load, load factors. Dead load of the wearing surface (DW) is always present but may be used with maximum and minimum load factors.

Additional information is given in the analysis and design article [BDM 6.5.4.2.1], and example load cases are given in the commentary [BDM C6.5.4.2.1].

6.5.4 Abutment analysis, design, and detailing

6.5.4.1 Integral abutments

6.5.4.1.1 Analysis and design

[AASHTO-LRFD 5.10.6, 10.7.1.2]

The load and resistance factor design (LRFD) method shall be used for integral abutments.

The Soils Design Unit provides information regarding soils and recommended abutment support for each bridge. Standard integral abutments are supported on steel H-piles or timber piles but not on concrete

piles, pipe piles, drilled shafts, or footings founded on rock. For bridges with skews of 30 degrees or less, H-piles are rotated to align the pile webs with the centerline of abutment bearings. At skews above 30 degrees, piles shall be aligned with pile webs perpendicular to centerline of roadway. General guidelines for pile selection are given in Table 6.5.4.1.1.

Table 6.5.4.1.1. Guidelines for selection of integral abutment pile type

Bridge length	Pile Type	Remarks
150 feet or less	Timber	Use if soil conditions are suitable, but do not use carpet padding wrapping at top.
	Steel H-pile	Use if soil conditions are suitable, if point bearing is required, or if economical.
More than 150 to 200 feet	Timber	Use if soil conditions are suitable and use carpet padding wrapping at top [BDM 6.2.6.3 and C6.2.6.3].
	Steel H-pile	Use if soil conditions are suitable, if point bearing is required, or if economical.
More than 200 feet	Steel H-pile	Use if soil conditions are suitable.

For bridge lengths up to and including 130 feet prebored holes are not required, and pile loads need not include the dynamic load allowance. To facilitate bridge superstructure end movements for bridges greater than 130 feet in length, piles for those bridges are to be driven in prebored holes at least 10 feet deep. Prebored holes are to be sized, constructed, and filled with bentonite slurry as specified in the Iowa DOT Standard Specifications [IDOT SS 2501.03, Q].

Prebored holes greater than 10 feet deep may be required for soil layer penetration and to prevent downdrag forces in deep embankment fills. For steel H-piles within typical design conditions, prebored hole depths to 15 feet are permissible for integral abutments. When holes deeper than 10 feet are used, however, the designer shall verify use of the deep holes with the supervising Unit Leader.

For a typical project the number of piles shall be determined from the total abutment Strength I factored load divided by the factored structural resistance for one pile [BDM 6.2.6.1, 6.2.6.3, and 6.5.1.1.1]. See the commentary for an example [BDM C6.5.1.1.1]. The following rules also shall apply.

- The standard double reinforced concrete approach slab [OD SRP BR-series] may be assumed to span 12 feet.
- Include dead and live load from the approach slab on abutment piles.
- Assume that the HL-93 lane load can be present on both the approach and bridge while the truck or tandem is present only at one of the two locations.
- For integral abutments with additional wing extension piles shown on standard sheets [BSB SS 2085-2091], consider the wing extension piles for support of the wings only.
- Use at least one pile per PPCB or steel girder.
- Along the abutment use a maximum pile spacing of 8 feet and a minimum of the larger of 2.5 feet or 2.5 times the pile size [AASHTO-LRFD 10.7.1.2]. If piles are sleeved, allow 2 feet clear between sleeves.

Within the length and skew limits for bridges with integral abutments [BDM Tables 6.5.1.1.1-1 and 6.5.1.1.1.-2] pile bending and buckling need not be checked if prebored holes do not exceed a depth of 15 feet. Also, within the length limits and maximum PPCB depths, the abutment cap beam-diaphragm reinforcing steel shown on standard sheets [BSB SS 2078-2091] is adequate.
The designer shall determine the pile contract length based on geotechnical resistance and construction control method. In unusual cases, even though the structural resistance is sufficient, the designer may find it necessary to increase the number or size of abutment piles to achieve sufficient geotechnical resistance.

The designer also shall determine the target driving resistance based on construction control method and give the appropriate soil, resistance factor, contract length, driving target, and retap information on the

plans. For typical projects the designer shall use CADD Notes E818 and E819 [BDM 13.8.2]. See also "LRFD Pile Design Examples ~ 2013".

Many factors such as mix design, mix placement temperatures, mix geometry, ambient conditions, and curing methods can affect the thermal behavior of concrete. Based on the Bureau's long-standing experience with mass concrete using typical mixes, materials, and construction practices in Iowa, the designer shall apply IDOT Developmental Specifications for Mass Concrete – Control of Heat of Hydration, when the least dimension of any element exceeds 4.5 feet. The designer also shall consult with the supervising Unit Leader or the Bridge Project Development Engineer regarding mass concrete notes to be placed on the plans for controlling and monitoring concrete mix temperatures.

Regardless of abutment thickness the designer shall provide shrinkage and temperature reinforcement as required by the AASHTO LRFD Specifications [AASHTO-LRFD 5.10.6].

6.5.4.1.2 Detailing

For the usual bridge deck profile or a moderately superelevated deck profile the bottom of the integral abutment footing should be horizontal but, if the difference in bearing seat elevations is greater than 1.5 feet, the designer should consider sloping the bottom of the footing.

Use a standard spiral reinforcing hoop at the top of each embedded pile as detailed on standard sheets [BSB SS 2078-2091]. Hold the spacing for each spiral with three 7/8 x 7/8 x 1/8-inch steel angles.

Additional reinforcing in the form of p3 bars shall be placed in all integral abutments that are supported on steel H-piles and that support BTC, BTD, or BTE pretensioned prestressed concrete beams, continuous welded plate girders, or rolled steel beams. The p3 bars are bent and placed to surround each H-pile at the bottom of the abutment as detailed and listed on standard sheets [BSB SS 2085-2091]. The p3 bars are not required in PPCB bridges with BTB beams or CCS bridges.

Do not use paving notch dowels with integral abutments except for the J40-25 and J44-25 standards. These J-standards were updated on April 2016 to include an approach slab [OD SRP BR-205] which is tied to the integral abutment using stainless steel reinforcement.

The steel girder integral abutment details shown in Figures 6.5.4.1.2-1 and 6.5.4.1.2-2 are like those for PPCB integral abutments on standard sheets [BSB SS 2078-2091]. The steel girder details additionally incorporate a steel channel diaphragm bolted to girder stiffeners and bent 5t2 bars and front face 5d bars placed through one-inch holes drilled in girder webs.

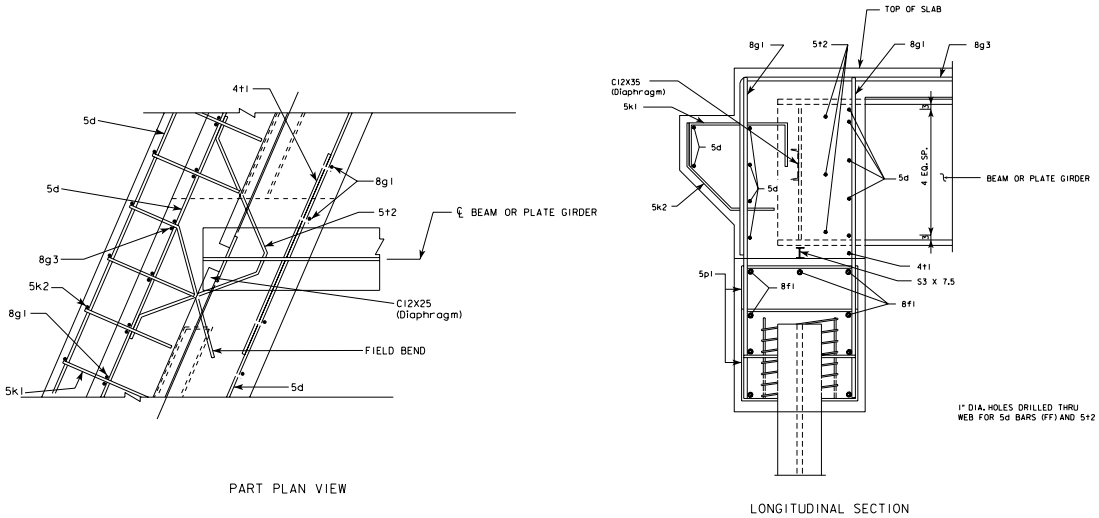

Figure 6.5.4.1.2-1. Integral abutment partial plan and section for a steel girder bridge

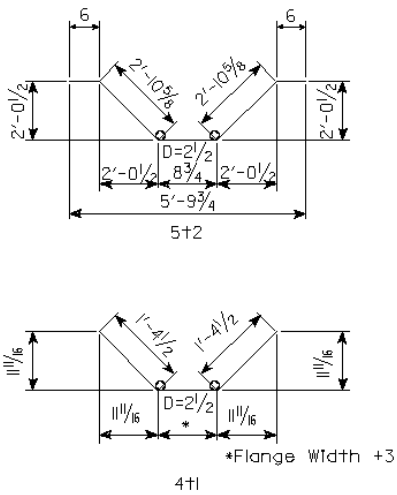

Figure 6.5.4.1.2-2. Special reinforcing for steel girder bridge integral abutment

Step elevations shall be detailed as for piers, but steps for integral abutments shall not be reinforced [BDM 6.6.4.1.1.2].

All barrier rail to bridge deck/wing reinforcement for interstate and primary bridges shall be stainless steel as well as the approach notch dowels used in the J40-25 and J44-25 standards. All other reinforcing bars in integral abutments shall be epoxy coated, including all bars in wing extensions, except for spirals.

When integral abutment piles are not designed for downdrag, approach pavement details shall be included with bridge plans. For projects completed in the Bridges and Structures Bureau, the Design Bureau will provide the approach pavement details.

When integral abutment piles are designed for downdrag, a paving block shall be included on the bridge plans, and approach pavement details shall be included with road plans. Including the approach pavement details with the road plans is intended to allow much of the settlement associated with pile downdrag to occur before placement of the pavement. Designers in the Bridges and Structures Bureau shall coordinate the approach pavement details with the Design Bureau.

Integral abutments shall be provided with subdrains as indicated on standard sheets for PPCB bridges [BSB SS 1007-1007E].

6.5.4.2 Stub abutments

6.5.4.2.1 Analysis and design

[AASHTO-LRFD 4.7.4.4, 5.10.6, 10.7.1.2, 11.6]

The load and resistance factor design (LRFD) method shall be used for stub abutments.

Stub abutments are intended for use on shallow-slope embankments if integral abutments are not feasible. A stub abutment is designed to resist longitudinal forces transmitted through expansion bearings from the superstructure. Between expansion bearing seats the abutment has formed wash sections for drainage.

Minimum stub abutment dimensions shall be those illustrated in Figure 6.5.4.2.1. The length of the expansion bearing seat shall meet the requirement for seismic zone given in the AASHTO LRFD Specifications [AASHTO-LRFD 4.7.4.4]. Except for sites classified as Site Class F or for Mississippi or Missouri River bridge sites seat length shall be determined for Seismic Zone 1.

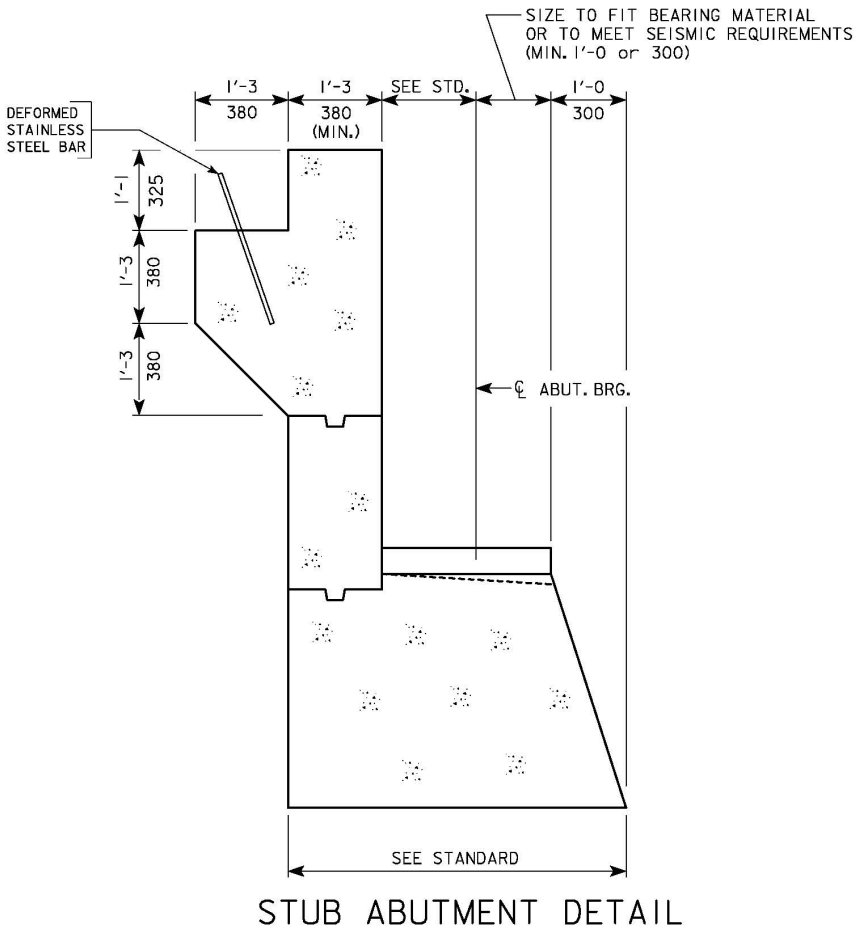

Figure note:

- See Design Bureau's standard road plan for approach pavement [DB SRP BR-series].

Figure 6.5.4.2.1. Standard stub abutment section with required minimum dimensions

Standard stub abutments for BTC-, BTD-, and BTE-beam, PPCB bridges are given on standard sheets [BSB SS 2092-2105].

A stub abutment shall be designed for the effects of vertical load, horizontal load, and moment. Load combinations should seek to do the following:

- Maximize axial load to toe pile,
- Maximize axial load to heel pile,
- Minimize axial load to toe pile,
- Minimize axial load to heel pile, and
- Maximize shear load to pile.

See the commentary [BDM C6.5.4.2.1] for typical load combinations.

The Bureau follows the additional guidelines listed below.

- Piles in the two rows are staggered.
- Along the abutment, use a maximum pile spacing of 8 feet and a minimum of the larger of 2.5 feet or 2.5 times the pile size [AASHTO-LRFD 10.7.1.2].
- For typical projects consider only Strength I and Service I limit states.
- Consider maximum and minimum load factors.
- Vertical loads on piles consist of dead and live load only; no dynamic load allowance is included.

- Consider dead and live load on the approach pavement.
- Consider superstructure live load uplift.
- Vertical loads are resisted by the back and front rows of piles.
- For resisting uplift, the nominal resistance between an H-pile and abutment concrete shall be as given in BDM 6.2.6.1.
- Horizontal loads are resisted by shear in all piles plus the horizontal components of the front battered row of piles.
- Lateral resistances at the service and strength limit states are as given in Table 6.2.6.1-2 for steel H-piles and as given in Table 6.2.6.3 for timber piles. Detailed analysis may determine larger lateral resistances.
- Superstructure temperature loading is reversible.
- Design of a tall backwall for nonstandard stub abutments shall be designed as a retaining wall to fully withstand soil pressures [AASHTO-LRFD 11.6], as well as vertical loads.

The designer shall determine the pile contract length based on geotechnical resistance and construction control method. In unusual cases, even though the structural resistance is sufficient, the designer may find it necessary to increase the number or size of abutment piles to achieve sufficient geotechnical resistance.

The designer also shall determine the target driving resistance based on construction control method and give the appropriate soil, resistance factor, contract length, driving target, and retap information on the plans. For typical projects the designer shall use CADD Notes E818 and E819 [BDM 13.8.2]. See also “LRFD Pile Design Examples”.

Many factors such as mix design, mix placement temperatures, mix geometry, ambient conditions, and curing methods can affect the thermal behavior of concrete. Based on the Bureau’s long-standing experience with mass concrete using typical mixes, materials, and construction practices in Iowa, the designer shall apply IDOT Developmental Specifications for Mass Concrete – Control of Heat of Hydration, when the least dimension of any element exceeds 4.5 feet. The designer also shall consult with the supervising Unit Leader or the Bridge Project Development Engineer regarding mass concrete notes to be placed on the plans for controlling and monitoring concrete mix temperatures.

Regardless of abutment thickness the designer shall provide shrinkage and temperature reinforcement as required by the AASHTO LRFD Specifications [AASHTO-LRFD 5.10.6].

6.5.4.2.2 Detailing

For the usual bridge deck profile or a moderately superelevated deck profile the bottom of the stub abutment footing should be horizontal but, if the difference in bearing seat elevations is greater than 2.5 feet, the designer should consider sloping the bottom of the footing.

Use a standard spiral reinforcing hoop at the top of each embedded timber pile (but not steel H-pile). Hold the spacing for each spiral with three 7/8 x 7/8 x 1/8-inch steel angles.

Use paving notch dowels as shown on standard sheets [BSB SS 2092-2098].

Because of the risk of leakage from or failure of the expansion joint at the abutment, provide wash sections for drainage between bearings as shown in Figures 6.5.4.2.2-1 and 6.5.4.2.2-2. Seal the wash sections and bearing seats with a concrete sealer specified in the Iowa DOT Standard Specifications [IDOT SS 2403.03, P, 3]. Provide a bar mat in each bearing seat as shown in Figure 6.5.4.2.2-2.

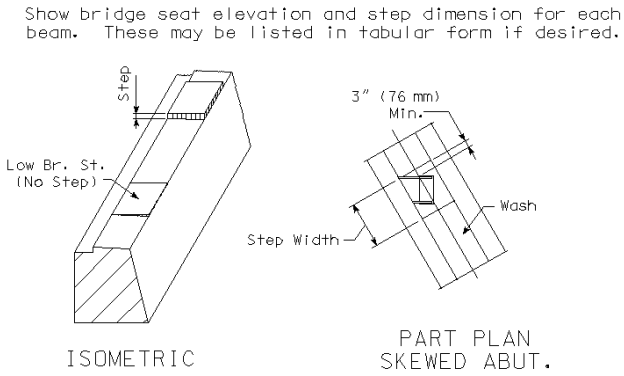

Figure 6.5.4.2.2-1. Wash section between bearing seats

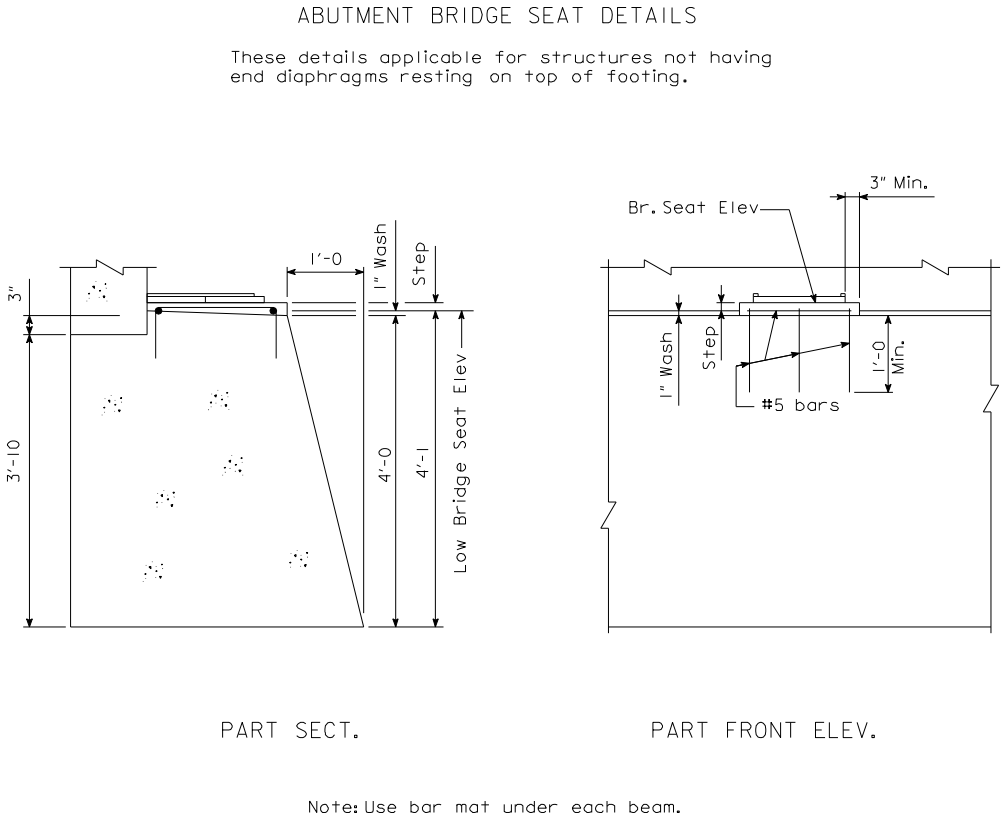

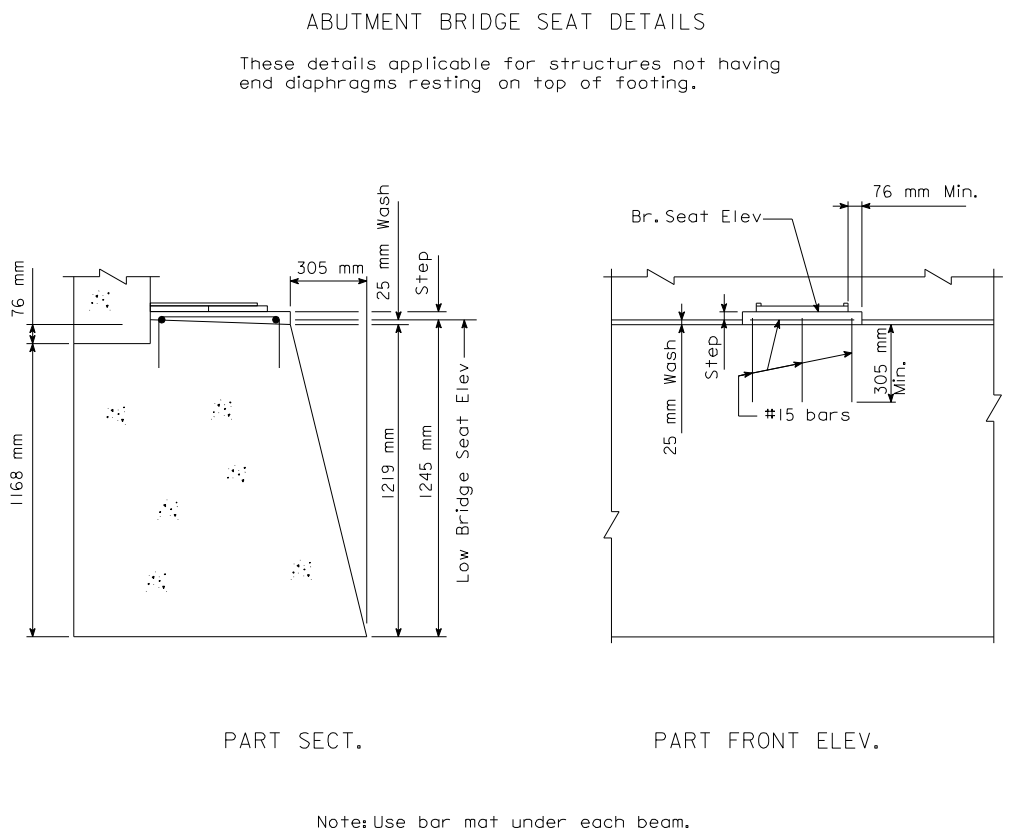

Figure 6.5.4.2.2-2. Bearing seat details

Provide a minimum distance of 6 inches between center of an anchor bolt and edge of a stub abutment.

All barrier rail to bridge deck/wing reinforcement and paving notch dowels for interstate and primary bridges shall be stainless steel. All other reinforcing bars in stub abutments shall be epoxy coated, including all bars in wing extensions.

When a stub abutment is adjacent to PCC approach pavement and abutment piles are not designed for downdrag, approach pavement details shall be included with bridge plans. For projects completed in the Bridges and Structures Bureau, the Design Bureau will provide the approach pavement details.

When a stub abutment is adjacent to PCC approach pavement and abutment piles are designed for downdrag, a paving block shall be included on the bridge plans, and approach pavement details shall be included with road plans. Including the approach pavement details with the road plans is intended to allow much of the settlement associated with pile downdrag to occur before placement of the pavement. Designers in the Bridges and Structures Bureau shall coordinate the approach pavement details with the Design Bureau.

Stub abutments shall be provided with subdrains as indicated on standard sheets for PPCB bridges [BSB SS 1007-1007E].

6.5.4.3 Wing walls

6.5.4.3.1 Analysis and design

The load and resistance factor design method shall be used for design of wing walls.

For typical bridges with wings and wing extensions shown on standard sheets no special design is required. In unusual cases when the wings need to be specially designed and high performance concrete (HPC) is specified for the bridge, the designer may take advantage of the higher strength concrete [IDOT Developmental Specification for High Performance Concrete for Structures.

Wings and extensions for typical bridges are shown on Bureau standard sheets as follows:

- Integral abutments with 7-foot standard abutment wings for BTB beams [BSB SS 2078-2084, 4500-4506],
- Integral abutments with 7-foot standard abutment wings and 6.50-foot (measured from centerline of abutment) standard abutment extensions and abutment diaphragm wing extensions for BTC, and BTD beams [BSB SS 2085-2091, 4507-4513],
- Integral abutments with 7-foot standard abutment wings and 8.50-foot (measured from centerline of abutment) standard abutment extensions and abutment diaphragm wing extensions for BTE beams [BSB SS 2085-BTE – 2091-BTE, 4507-BTE – 4513-BTE],
- Stub abutments with 7-foot standard wings and 6-foot (measured from front face of abutment) standard wing footings and wing extensions for BTC, and BTD beams [BSB SS 2092-2105, 4542-4548].
- Stub abutments with 7-foot standard wings and 8-foot (measured from front face of abutment) standard wing footings and wing extensions for BTE beams [BSB SS 2092-BTE - 2105-BTE, 4542-BTCDE – 4548-BTCDE].

Note that the standard sheets generally use the term “wing wall” in a collective sense to include wing extension and wing. On some stub abutment sheets [BSB SS 2099-2105] the term “wingwall” in the reinforcing table also refers specifically to the wing extension.

For typical PPCB or CWPG bridges there should be no need to change wing lengths, but for non-typical bridges the designer shall check the need to increase lengths. A bridge is considered non-typical if any of the following circumstances apply:

- Skew greater than 30 degrees,
- Superelevation, or
- Beam depth greater than 63 inches, the standard PPCB BTE beam depth.

To check wing lengths, assume the 1 vertical to 2.5 horizontal slope of the embankment extends from the berm underneath the bridge to road elevation, as shown in Section A-A of Figure 6.5.4.3.1-1. When flatter embankment slopes, such as a 1 to 3 slope, are used the wing lengths should still be checked based on a 1 to 2.5 slope unless a 1 to 3 slope is specifically called for by the Preliminary Bridge Design Unit. The wing length should be sufficient so that sloping soil will intersect the berm and not spill onto the bridge seat or around the ends of the wings. Although the Bureau prefers the 1 vertical to 2.5 horizontal slope, a steeper slope of 1 to 2 along the wings is permissible with approval of the supervising Unit Leader. If the 1 to 2 slope indicates the need to increase wing lengths, use a 1 to 2.5 slope to determine the extended lengths. For an example, see BDM C3.7.5.

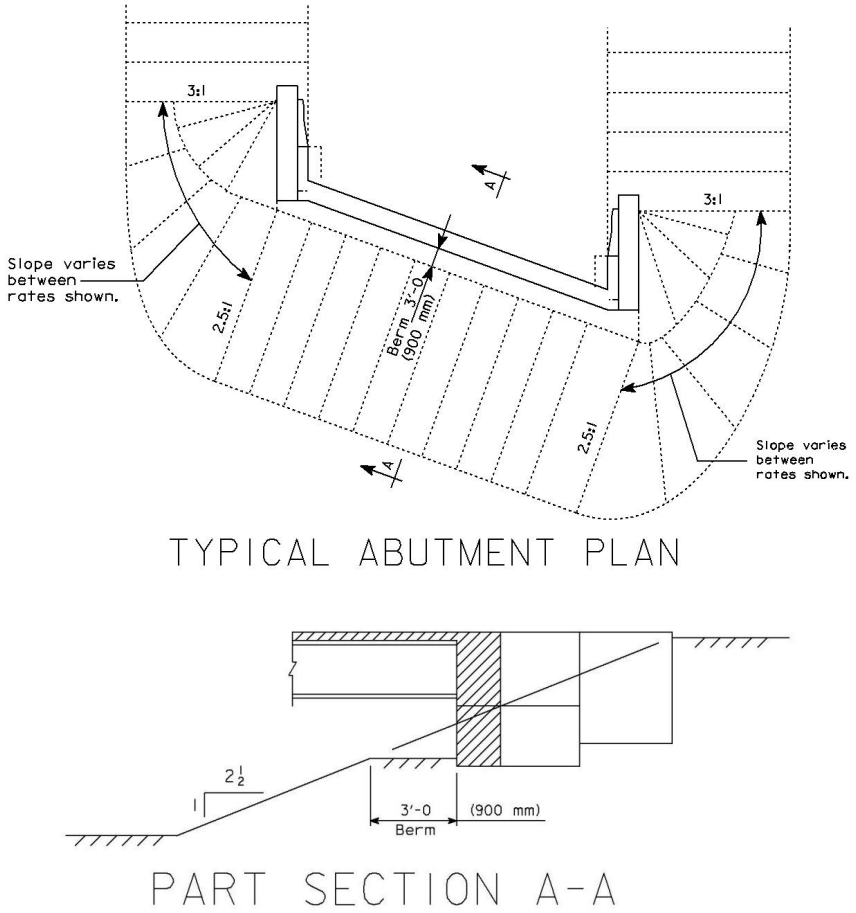

Figure 6.5.4.3.1-1 Abutment and embankment plan and abutment section
[Note: Top of wingwall in plan view is now rectangular.]

In general, keep wing lengths the same unless there would be greater than a 5-foot difference.

When a wing length for a stub abutment should be longer than the length shown on standard sheets, the designer shall consult the Chief Structural Engineer. Generally the designer will need to provide a long wing without wing footing but with a counterfort and footing supported on piles, as shown in Figures 6.5.4.3.1-2 and 6.5.4.3.1-3. The counterfort footing and piles will need to be designed for vertical and lateral loads, and the wing will need to be reinforced as a simply supported beam to support vertical dead load and lateral live and dead loads.

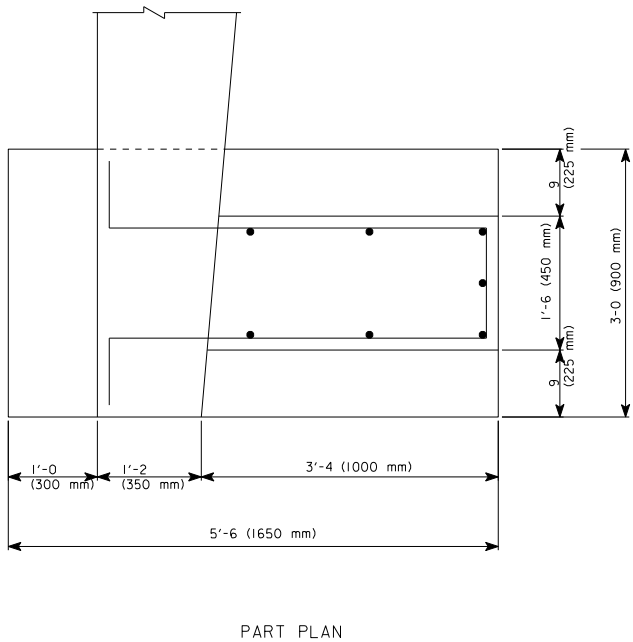

Figure 6.5.4.3.1-2. Plan of counterfort at end of extended wing for a stub abutment

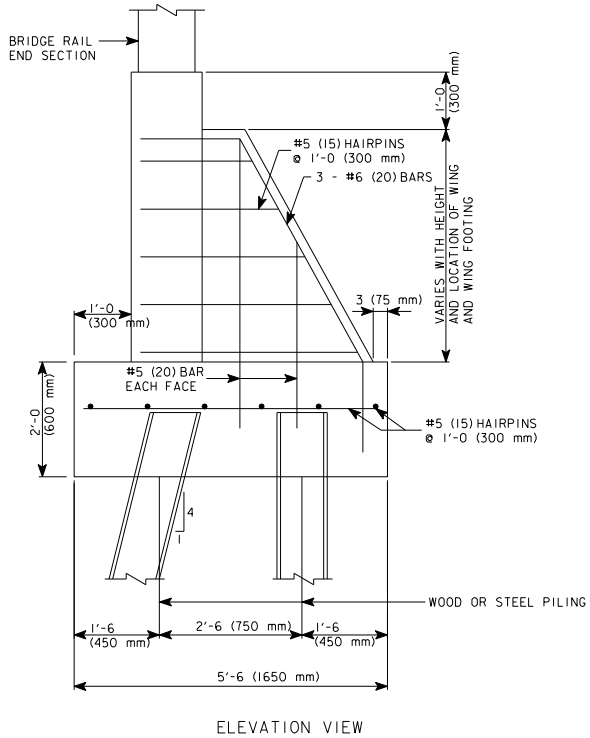

Figure note:

- This figure is at a smaller scale than Figure 6.5.4.3.1-2.

Figure 6.5.4.3.1-3. Elevation of counterfort at end of extended wing for a stub abutment

If the designer determines that a wing for an integral abutment needs to exceed the length available with a standard wing and extensions, the designer shall consult the Chief Structural Engineer. Generally, the

designer shall investigate a separate wall keyed to, but allowing movement of the integral abutment. Because of the expected movement of an integral abutment the designer shall not attach a wall supported by a counterfort directly to the abutment.

6.5.4.3.2 Detailing

All barrier rail to bridge deck/wing reinforcement for interstate and primary bridges shall be stainless steel. All other reinforcement in the wings, abutment wing extensions, abutment diaphragm wing extensions, and wing extensions shall be epoxy coated.

C6.5 Abutments

C6.5.1.1.1 Integral

20 October 2014 ~ Integral abutment limits for horizontally curved steel girder bridges

Integral abutment policy has been adjusted based on the latest ISU research (see report reference below). The purpose of the research was to investigate the behavior of horizontally curved bridges with integral abutment and semi-integral abutment bridges with a specific interest in the response to changing temperatures. This was done by monitoring and evaluating the behavior of six in-service, horizontally curved, steel-girder bridges with integral and semi-integral abutments. The six bridges are located at the intersection of I-80, I-35, and I-235 on the northeast side of Des Moines, also known as the northeast mix-master. The long-term objective of this effort is to establish guidelines for the use of integral abutments with curved girder bridges. In light of the monitored in-service bridge behavior and resulting discussion between IDOT and ISU, the integral abutment limits were extended to horizontally curved steel girder bridges with minimum radii of 900 feet and a maximum bridge width of 44 feet from gutter line to gutter line. These same parameters are applicable to horizontally curved girder bridges with semi-integrals abutments. The limits with respect to semi-integral abutments were not included in the main body of the BDM since these abutments types have not yet been addressed in the manual.

Greimann, L.F., B.P. Phares, Y. Deng, G. Shryack and J. Hoffman. *Field Monitoring of Curved Girder Bridges with Integral Abutments*, Final Report, FHWA Pooled Fund Study TPF-5(169), Iowa State University InTrans Project 08-323, January 2014. (Available online at https://intrans.iastate.edu/app/uploads/2018/03/curved_girder_integral_abutments_w_cvr.pdf).

16 August 2007 ~ Parameter study and discussion

In order to adjust integral abutment policy to LRFD and the latest ISU research (Abendroth and Greimann 2005) a parameter study was conducted to determine the effects of bridge length, end span length, skew, and prebore depth. For PPCB bridges the study specifically worked with the new A-D and BTB-BTD beams with an end span of maximum beam length. For CWPG members the basic condition was taken to be an end span of 150 feet or the maximum end span that would result in a pile structural resistance at Structural Resistance Level – 1, the LRFD equivalent to a 6 ksi axial stress under service load design.

In LRFD there is a single check for combined forces (axial load and bending) rather than the two (stability and yield) in service load design. The parameter study included the LRFD combined forces check and a ductility check (Abendroth and Greimann 2005). Generally the LRFD combined forces check gave results less conservative but similar to those from the stability and yield checks in service load design. A different, more conservative way of evaluating the effects of pile skew (similar to Abendroth and Greimann 2005), however, gave results essentially the same as those for past parameter studies.

With the latest ISU recommendations for ductility, the ductility check generally will not control the design, but use of the recommended seismic plate ratios requires that several H-pile shapes be avoided. Ratios for flange plates $b_f/2t_f$ above 11.0 do not work for Grade 50 steel, and the policy recommendation is to set an upper limit of 10.5, but either limit results in the same list of acceptable H-piles: HP 10x57, HP 12x74, HP 12x84, HP 14x102, and HP 14x117. The HP 14x102 shape should be avoided because it generally is not readily available.

Because of the less conservative biaxial bending and ductility checks, bridges with minimal skew may have greater lengths than present policy allows. Limits other than bridge length may be appropriate, however. Considering the type and performance of present pavement joints, the maximum bridge length for zero skew was set for approximately 1.55 inches maximum movement each way, assuming that the bridge is fixed at mid-length. At the maximum bridge length the pavement joints should be of the CF-3 type [OD SRP PV-101 and RK-20]. At shorter bridge lengths the CF-2 or CF-1 joints should be used within the guidelines on the standard road plan [OD SRP RK-20].

In general, the parameter study verified the previous study conducted for the service load design manual. The information for the Bridge Design Manual tables, however, was modified to better fit the LRFD format.

Reference

Abendroth, R.E. and Greimann, L.F. (2005) *Field Testing of Integral Abutments, Final Report HR-399.* Center for Transportation Research and Education (CTRE), Iowa State University, Ames, Iowa. Available online at <https://iowadot.gov/research/reports/Year/2005/fullreports/hr399.pd>.

01 January 2016 (Updated 01 July 2016) ~ Integral abutment piles with shallow bedrock requiring rock coring

Rock coring for integral abutment bridges shall be required for Case 1 and 2:

1. Short bridges of 130 feet or less without prebore per BDM 6.5.1.1.1 which have less than 10 feet of soil between the bottom of abutment footing and top of bedrock.
2. All bridges with 10 feet of prebore and 15 feet or less of soil between the bottom of abutment footing and top of bedrock.

Check with the Chief Structural Engineer regarding the feasibility of using integral abutments under these situations.

In the text below the term rock socket is specifically reserved for the bottom 3 feet of the rock core that is filled with concrete in order to lock the piles in place. Any rock coring above the bottom 3 feet is referred to as cored rock prebore. Any prebore of the soil above the top of bedrock is referred to as soil prebore.

Case 1: Because installation of piling requires rock coring these short bridges will be constructed with 10 feet of prebore as is typical for bridges longer than 130 feet. The soil prebore and any cored rock prebore extending to a depth of 10 feet below the bottom of abutment footing shall have a minimum diameter 4 inches greater than the maximum cross-sectional dimension of the pile. The rock socket shall have a minimum diameter 2 inches greater than the maximum cross-sectional dimension of the pile. [Example: For HP10 steel piles specify a minimum of 18 inches for the diameter of prebored holes in soil and rock and a minimum of 16 inches for the diameter of rock sockets.] The 10 feet deep prebored hole shall be filled with bentonite slurry.

Case 2: The minimum depth of prebore is 10 feet. The maximum depth of prebore is 15 feet per BDM 6.5.4.1.1. In general, it is advisable to set the depth of prebore to the top of bedrock when the depth of bedrock is between 10 and 15 feet, otherwise 10 feet shall be used. The soil prebore and any cored rock prebore extending to a depth of 10 feet below the bottom of abutment footing shall have a minimum diameter 4 inches greater than the maximum cross-sectional dimension of the pile. Any soil prebore below 10 feet shall also have a minimum diameter 4 inches greater than the maximum cross-sectional dimension of the pile. The rock socket shall have a minimum diameter 2 inches greater than the maximum cross-sectional dimension of the pile. [Example: For HP10 steel piles specify a minimum of 18 inches for the diameter of prebored holes in soil and rock and a minimum of 16 inches for the diameter of rock sockets.] The prebored hole shall be filled with bentonite slurry.

Where rock coring is required the minimum depth of the rock socket shall be 3 feet into rock. The piles shall be seated by driving the pile to the target driving resistance. A minimum of 3 feet of Class C structural concrete shall be placed in the bottom of the rock socket to lock the base of the piles in place. The concrete may be placed before or after the piles are seated. The contractor shall make a reasonable effort to clean the bottom of the socket before inserting pile or placing concrete. If piles are seated after the concrete is placed, then a retarder may be required to ensure the concrete remains plastic while the piles are driven. The contractor shall brace the piles in the correct position until the concrete achieves 4 ksi compressive strength. The required unsupported pile height, typically 10 feet to 15 feet below the bottom of the abutment footing, shall be maintained by filling the prebored hole with bentonite slurry according to IDOT SS 2501.03, Q. If necessary, the designer may require the contractor to place saturated sand from the top of the concrete in the rock socket to the bottom of the unsupported pile height.

When rock coring is required the designer shall generally indicate the following on the Longitudinal Section Along Centerline Approach Roadway of the Situation Plan sheet:

- Type, size, and length of pile
- Bottom of abutment footing elevation
- Bottom of prebored hole elevation, diameter of prebored hole, and length filled with bentonite slurry
- Anticipated top of rock elevation
- Minimum bottom of rock socket elevation, socket diameter, and length filled with concrete

Note E184 Prebored Holes in the General Notes shall reference rock coring notes on the abutment sheets. For example:

> THE BRIDGE CONTRACTOR SHALL PREBORE HOLES FOR ABUTMENT PILES. HOLES SHALL BE BORED TO THE ELEVATIONS SHOWN ON THE "LONGITUDINAL SECTION ALONG CENTERLINE APPROACH ROADWAY" ON DESIGN SHEET _____. SEE ABUTMENT PILING NOTES ON DESIGN SHEET _____ FOR SPECIAL ROCK CORING REQUIREMENTS.

The following notes or similar ones shall be included with the abutment plan sheets:

> THE _____ INCH DIAMETER PREBORED HOLE IN THE SOIL SHALL EXTEND FROM THE BOTTOM OF THE ABUTMENT FOOTING TO THE TOP OF THE _____ STRATUM AS SHOWN ON THE SOIL PROFILE SHEET WHICH IS ANTICIPATED AT ELEVATION _____. THE _____ INCH DIAMETER ROCK SOCKET SHALL BE CORED TO ELEVATION _____ OR LOWER SUCH THAT THE BOTTOM OF THE SOCKET SHALL BE AT LEAST 3 FEET INTO THE _____ STRATUM. THE CONTRACTOR SHALL CLEAN THE BOTTOM OF THE ROCK SOCKET BEFORE INSERTING PILES OR PLACING CONCRETE.
>
> SEAT THE PILING IN THE BEDROCK BY DRIVING IT TO THE TARGET DRIVING RESISTANCE. THE NUMBER OF HAMMER BLOWS SHALL BE LIMITED TO PREVENT DAMAGE TO THE PILING. THE SOCKET SHALL BE BACKFILLED WITH 3 FEET OF CLASS "C" STRUCTURAL CONCRETE BEFORE OR AFTER DRIVING PILES. CONCRETE PLACED BEFORE PILES ARE DRIVEN SHALL REMAIN PLASTIC UNTIL PILE DRIVING IS COMPLETE. RETARDER MAY BE REQUIRED AS DIRECTED BY THE ENGINEER. PILES SHALL BE BRACED IN THE CORRECT POSITION UNTIL CONCRETE HAS REACHED 4 KSI COMPRESSIVE STRENGTH.
>
> IF BEDROCK IS NOT ENCOUNTERED ABOVE ELEVATION _____, THEN NO ADDITIONAL PREDRILLING IN THE SOIL IS REQUIRED AND NO "CORING ROCK SOCKET" QUANTITY SHALL BE MEASURED FOR PAYMENT. THE LENGTH OF PREDRILLING SHALL BE MEASURED AND PAID FOR AT THE PRICE BID FOR "PREBORED HOLES".
>
> PREDRILLED HOLES SHALL BE FILLED WITH BENTONITE ABOVE ELEVATION _____.

When rock coring is specified designers shall include bid item 2599-999909 CORING ROCK SOCKET with units of linear feet. Designers shall include bid item 2501-6335010 PREBORED HOLES to account for predrilling in soil and placement of bentonite slurry. A rock coring bid item reference note similar to the following shall be included:

> THE QUANTITY OF "CORING ROCK SOCKET" IS BASED ON THE ANTICIPATED TOP OF ROCK ELEVATION AND CORING _____ FEET INTO THE ROCK FOR EACH PILE IN THE _____ ABUTMENT. THE NUMBER OF LINEAL FEET OF ROCK CORING WILL BE MEASURED IN THE FIELD AND PAID FOR AT THE CONTRACT UNIT PRICE BID PER LINEAL FOOT. THE PRICE BID INCLUDES THE COST OF PREDRILLING _____ INCH DIAMETER ROCK SOCKETS A MINIMUM _____ FEET INTO _____. THIS ITEM INCLUDES THE COST OF DISPOSAL OF EXCAVATED MATERIAL AND FURNISHING AND PLACING CLASS "C" STRUCTURAL CONCRETE TO BACKFILL THE SOCKET TO THE REQUIRED ELEVATION. [IT ALSO INCLUDES THE COST OF BACKFILLING THE HOLES FROM THE TOP OF SOCKET CONCRETE TO THE BOTTOM OF PREBORE ELEVATION WITH SATURATED SAND MEETING THE REQUIREMENTS OF STANDARD SPECIFICATION 4110, GRADATION 1.] IF ABUTMENT PILES CAN BE DRIVEN TO A MINIMUM _____ FEET OF LENGTH, NO MEASUREMENT OR PAYMENT WILL BE MADE FOR "CORING ROCK SOCKET".

LRFD Integral Abutment Example

Given: Four-span PPCB bridge, 105-120-120-105-foot spans, 450-foot length, 20-degree skew
Five-BTC cross section, beam spacing 9'-3
Integral abutments
Soils Design Unit recommendation: H-piles end bearing on rock
Total abutment factored vertical load (includes IM) = $\Sigma\eta_i\gamma_iP_i$ = 1200 kips
The thermal origin is assumed to be at the center of the bridge.

Select HP 10x57 for integral abutments for a PPCB bridge [BDM 6.5.1.1.1]. Nominal structural resistance for an HP 10x57 at SRL-2, maximum in end bearing: P_n = 365 kips [BDM Table 6.2.6.1-1]. Note, however, that this maximum may not be permissible based on integral abutment limits, which may be less than SRL-2 [BDM Table 6.5.1.1.1-1].

Check maximum bridge length. Interpolate for 20-degree skew [BDM Table 6.5.1.1.1-1].

L_{max} = 525 + [(20-15)/(30-15)](475-525) = 508 feet; 508 feet > 450 feet, OK

Check integral abutment limit on nominal structural resistance.

Table 6.5.1.1.1-1 indicates that interpolation will not lead to 365-kip resistance, but shorter-than-maximum end span will permit some increase in extrapolated value.

Try 10-foot prebore with interpolation for skew; extrapolate for resistance with 120-foot end span.

P_n = 324 + [(20-15)/(30-15)](243-324) = 297 kips

Increase P_n for shorter-than-maximum end span.

P_n = (120/105)(297) = 339 kips, which is close to 365 kips. (Using a 15-foot prebore would permit the full 365 kips but, as the next step shows, the additional prebore would not reduce the number of piles.)

Determine number of piles

Number of piles, n = $\Sigma\eta_i\gamma_iP_i/\varphi_cP_n$ = 1200/(0.6*339) = 5.9, use 6

Check minimum: 5 beams require 5 piles, OK; maximum pile spacing is 8 feet, <u>use 6.</u>

Factored load per pile, P_u = 1200/6 = 200 kips

This completes the structural check for the integral abutment. However, the complete design requires contract length and driving target for the piles. See "LRFD Pile Design Examples ~ 2013" for additional steps to complete a typical pile design considering site soil classification and construction control method.

2011 ~ Abutment Backfilling at MSE Walls

During construction of the I-235 overpasses the Soils Design Unit and Construction and Materials Bureau decided not to place the abutment backfill sand with the flooding method given on standard sheets [OBS SS 1007D, 1007E] when the abutment was near an MSE wall. The primary reason was that the flooding water did not flow through the abutment subdrain. In 2011 the question of backfill flooding again was asked for the Wesley Parkway Bridge over I-29. The decision reached for the bridge and for standard practice was that when the abutment is within the MSE reinforced zone, flooding should not be used. The usual geotextile fabric, porous backfill, and abutment subdrain should be placed to divert deicer chemicals from the MSE wall straps. The abutment backfill should be the same material as placed for the MSE wall, and it should be placed in lifts and compacted in the same way as the MSE wall backfill material. Site constraints may dictate that the abutment subdrain be tied into the MSE wall subdrain. The designer will need to include a note on the plans that prohibits flooding of the backfill.

C6.5.1.1.1 Stub

2011 ~ Abutment Backfilling at MSE Walls
During construction of the I-235 overpasses the Soils Design Unit and Construction and Materials Bureau decided not to place the abutment backfill sand with the flooding method given on standard sheets [OBS SS 1007D, 1007E] when the abutment was near an MSE wall. The primary reason was that the flooding water did not flow through the abutment subdrain. In 2011 the question of backfill flooding again was asked for the Wesley Parkway Bridge over I-29. The decision reached for the bridge and for standard practice was that when the abutment is within the MSE reinforced zone, flooding should not be used. The usual geotextile fabric, porous backfill, and abutment subdrain should be placed to divert deicer chemicals from the MSE wall straps. The abutment backfill should be the same material as placed for the MSE wall, and it should be placed in lifts and compacted in the same way as the MSE wall backfill material. Site constraints may dictate that the abutment subdrain be tied into the MSE wall subdrain. The designer will need to include a note on the plans that prohibits flooding of the backfill.

C6.5.4.1 Integral abutments

C6.5.4.1.1 Analysis and design

April 2013 ~ Guidelines for mass concrete
Previous guidelines for mass concrete have been misinterpreted due to aesthetic shapes and unusual configurations. The revised statement in this article

> "… when the least dimension of any element exceeds 4.5 feet".

is intended to identify the large volumes of concrete that need to be considered mass concrete. There may be cross sections along a tapered abutment that meet the above definition of mass concrete and those that do not, but the sections that meet the definition classify the abutment as mass concrete, and therefore require the mass concrete provisions.

C6.5.4.2 Stub abutments

C6.5.4.2.1 Analysis and design

April 2013 ~ Guidelines for mass concrete
Previous guidelines for mass concrete have been misinterpreted due to aesthetic shapes and unusual configurations. The revised statement in this article

> "… when the least dimension of any element exceeds 4.5 feet".

is intended to identify the large volumes of concrete that need to be considered mass concrete. There may be cross sections along a tapered abutment that meet the above definition of mass concrete and those that do not, but the sections that meet the definition classify the abutment as mass concrete, and therefore require the mass concrete provisions.

The following two figures for stub abutment load cases illustrate the typical cases that the designer should consider. The cases shown are not necessarily all the cases to be considered for a specific bridge, and the designer should be on the alert for load cases to add or remove based on the bridge under design.

SERVICE I LOADINGS

CASES B1 TO B5: MAXIMIZE LOADS TO FRONT PILES, MINIMIZE BACK PILES.
CASES B6 TO B8: MAXIMIZE LOADS TO BACK PILES, MINIMIZE FRONT PILES.
CASE B9: MINIMIZE LOADS TO FRONT PILES.
CASE B10: MAXIMIZE SHEAR & MINIMIZE LOADS TO FRONT PILES. (ALSO B4)

∴ LOAD FACTORS ARE 1.00

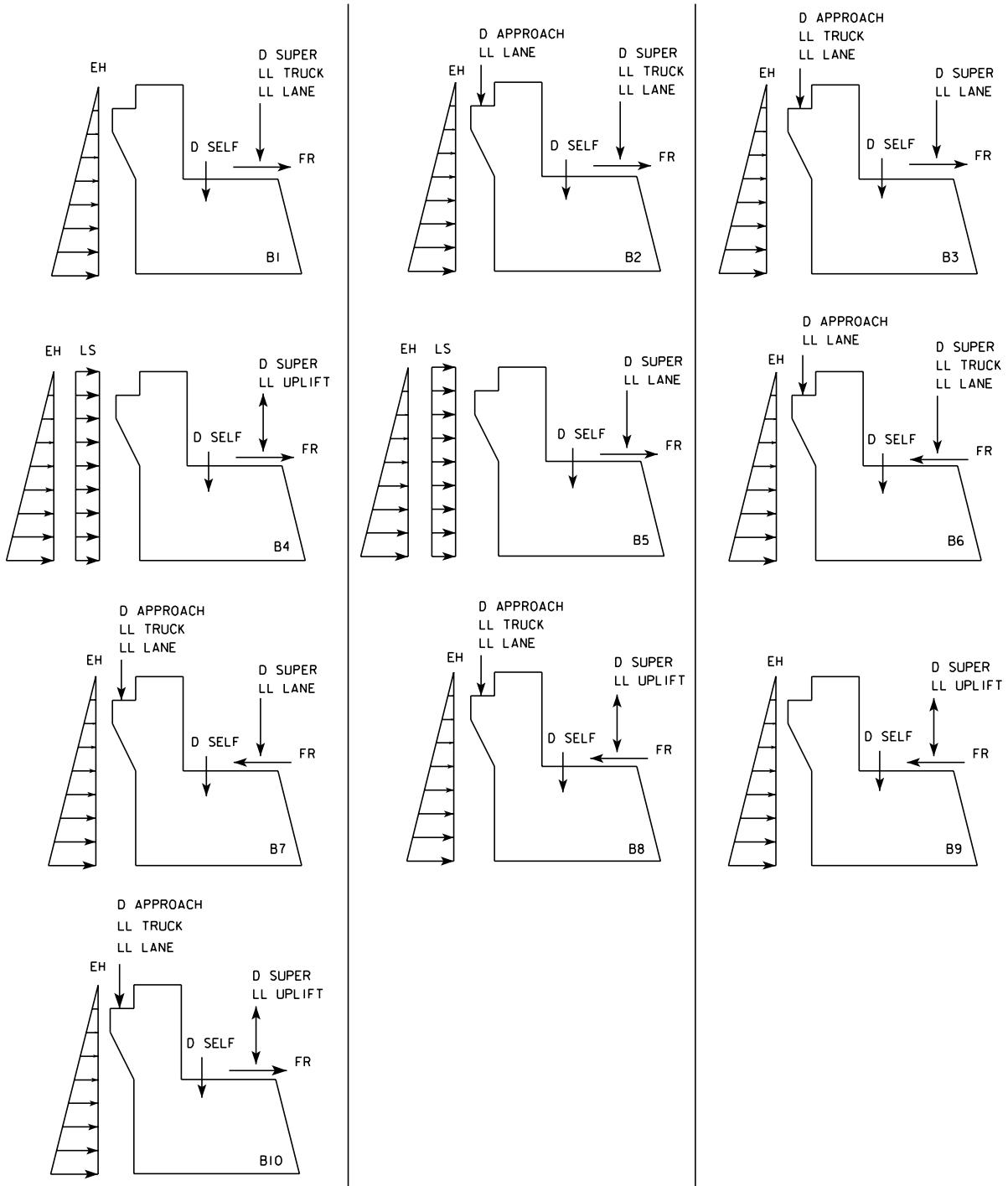

STRENGTH I LOADINGS

CASES A1 TO A5: MAXIMIZE LOAD TO FRONT PILES, MINIMIZE BACK PILES.
CASES A6 TO A8: MAXIMIZE LOAD TO BACK PILES, MINIMIZE FRONT PILES.
CASES A9 TO A10: MINIMIZE LOAD TO FRONT PILES
CASE A11: MAXIMIZE SHEAR & MINIMIZE LOAD TO FRONT PILES. (ALSO A4)

∴ MAX LOAD FACTORS USED UNLESS NOTED.

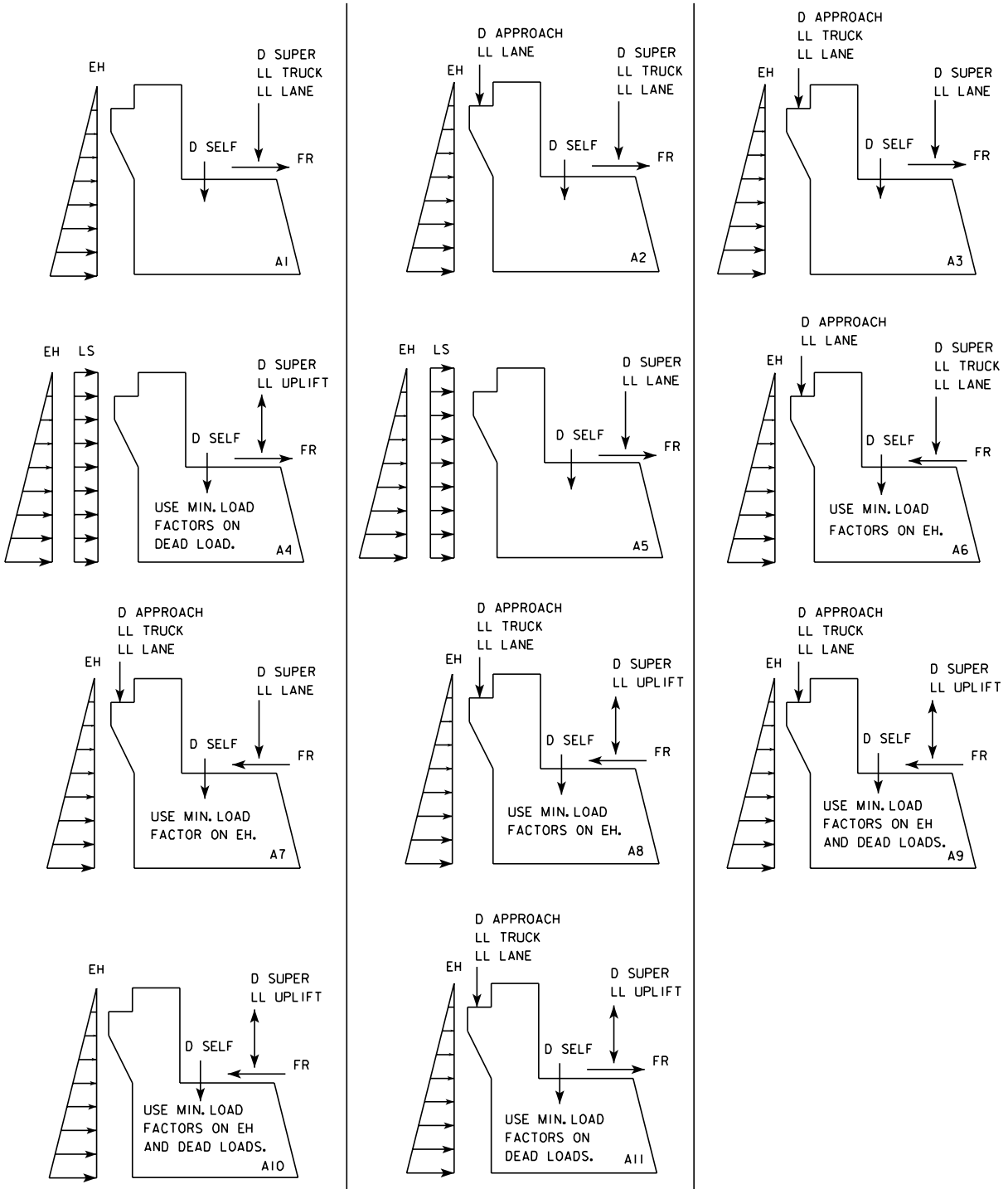

TABLE OF CONTENTS ~ PIERS

6.6 Piers
- 6.6.1 General
  - 6.6.1.1 Policy overview
    - 6.6.1.1.1 Frame pier
    - 6.6.1.1.2 T-pier
    - 6.6.1.1.3 Pile bent
    - 6.6.1.1.4 Diaphragm pier
  - 6.6.1.2 Design information
  - 6.6.1.3 Definitions
  - 6.6.1.4 Abbreviations and notation
  - 6.6.1.5 References
- 6.6.2 Loads
  - 6.6.2.1 Dead
  - 6.6.2.2 Live
  - 6.6.2.3 Dynamic load allowance
  - 6.6.2.4 Centrifugal force
  - 6.6.2.5 Braking force
  - 6.6.2.6 Vehicular collision force
  - 6.6.2.7 Water
  - 6.6.2.8 Wind
    - 6.6.2.8.1 Horizontal pressure on superstructure
    - 6.6.2.8.2 Horizontal pressure on substructure
    - 6.6.2.8.3 Vehicles on superstructure
    - 6.6.2.8.4 Vertical pressure on superstructure
  - 6.6.2.9 Ice
  - 6.6.2.10 Earthquake
  - 6.6.2.11 Earth pressure
  - 6.6.2.12 Uniform temperature
    - 6.6.2.12.1 General
    - 6.6.2.12.2 Design temperature changes
    - 6.6.2.12.3 Out-of-plane forces
    - 6.6.2.12.4 Unbalanced forces
      - 6.6.2.12.4.1 Bridges with integral abutments
      - 6.6.2.12.4.2 Bridges with stub abutments
    - 6.6.2.12.5 Skewed pier forces
    - 6.6.2.12.6 In-plane forces
  - 6.6.2.13 Temperature gradient
  - 6.6.2.14 Shrinkage
  - 6.6.2.15 Creep
  - 6.6.2.16 Locked-in force
  - 6.6.2.17 Settlement
  - 6.6.2.18 Friction
    - 6.6.2.18.1 Out-of-plane forces
    - 6.6.2.18.2 Unbalanced forces
      - 6.6.2.18.2.1 Bridges with integral abutments
      - 6.6.2.18.2.2 Bridges with stub abutments
    - 6.6.2.18.3 Skewed pier forces
  - 6.6.2.19 Vessel collision
- 6.6.3 Load application to structure
  - 6.6.3.1 Load modifier
  - 6.6.3.2 Limit states
  - 6.6.3.3 Longitudinal and transverse forces transmitted through bearings
    - 6.6.3.3.1 Elastomeric bearings
    - 6.6.3.3.2 Fixed bearings and keyed-in concrete diaphragms

6.6.3.3.3 Friction-acting bearings
6.6.3.4 Longitudinal and transverse forces for non-skewed piers
6.6.3.5 Parallel and perpendicular forces for skewed piers
6.6.4 Pier components and details
6.6.4.1 Frame piers and T-piers
6.6.4.1.1 Pier cap
6.6.4.1.1.1 Analysis and design
6.6.4.1.1.2 Detailing
6.6.4.1.2 Pier column
6.6.4.1.2.1 Analysis and design
6.6.4.1.2.2 Detailing
6.6.4.1.3 Pier footing
6.6.4.1.3.1 Analysis and design
6.6.4.1.3.2 Detailing
6.6.4.1.4 Seal coat
6.6.4.1.4.1 Analysis and design
6.6.4.1.4.2 Detailing
6.6.4.2 Pile bents and diaphragm piers
6.6.4.2.1 Analysis and design
6.6.4.2.1.1 Steel H-piles
6.6.4.2.1.2 Prestressed concrete piles
6.6.4.2.1.3 Concrete-filled steel pipe piles
6.6.4.2.2 Detailing

6.6 Piers

6.6.1 General

This series of articles on pier design is based on the AASHTO LRFD Specifications.

6.6.1.1 Policy overview

For typical pretensioned prestressed concrete beam (PPCB) or continuous welded plate girder (CWPG) road overpasses without special aesthetic requirements, the Bureau usually selects frame piers because of low construction cost. For PPCB or CWPG bridges over streams and rivers, the Bureau prefers T-piers to minimize potential damage from floating debris and flooding. T-piers also are the preferred choice for conditions where vehicle or railway collision or aesthetics are a design issue. Pile bents are the usual choice for short span continuous concrete slab (CCS), PPCB, or rolled steel beam (RSB) bridges.

For typical superstructure to pier connections the Bureau prefers an integral diaphragm or low profile fixed bearings, provided that a fixed connection will not subject a pier to excessive longitudinal forces. If longitudinal forces from a fixed connection are excessive the designer has the option of using expansion bearings, preferably steel reinforced elastomeric bearings.

Longitudinal forces on the superstructure—braking, wind, wind on vehicles, and thermal—are distributed to piers based on a set of rules depending on type of pier bearing or type of abutment. The longitudinal thermal movement applied to a pier is used in design of the pier with consideration of the stiffness of the bearings and pier columns. In most cases the Bureau considers a pier column base to be fixed, however, the designer may use spring connections representing footing rotations for a column requiring more detailed analysis.

Most Iowa pier foundations are supported on piles. If bedrock is close to the surface, spread footings for piers may be notched into the rock layer. Drilled shafts may be an option on some sites. The designer should review BDM 6.1.6 for situations where shallow bedrock is anticipated.

Any footings subject to potential frost heave are required to have a bottom elevation a minimum of 4 feet below ground line. For pier foundations within stream or river crossings the Bureau requires the designer to set the bottom of the footing a minimum of 6 feet below streambed elevation, to consider scour, and to check unsupported pile length [BDM 6.6.4.1.3.1] for all the piers, including any overbank piers. Exceptions for overbank pier foundation design based on streambed elevation and scour may be noted on the preliminary TS&L or may be obtained through coordination with the Preliminary Bridge Design Unit [BDM 3.7.4].

Early removal of pier cap formwork allows the contractor to reuse the same forms on multiple piers in a reduced time frame. As such, Bureau policy requires designers to check if the pier cap formwork for typical frame and T-piers can be removed when the concrete strength of the pier cap reaches 2.50 ksi. Pile bent, V-pier, abutment and other types of caps need not be considered. CADD Notes E735A and E735B shall be included on the pier sheets, as needed, in plan sets involving frame and T-piers. In general, designers shall not modify the pier design to accommodate early formwork removal. Exterior loads, such as superstructure beam load, will only be applied to the pier cap in accordance with IDOT SS 2403.03, N, 2. Additional details with respect to the load combinations and design checks required are given in BDM 6.6.4.1.1.1.

Selection criteria for pier type include the following:

- Roadway, railway, and waterway conditions;
- Subsurface conditions;
- Span length;
- Unsupported pier height;
- Vehicle or railway collision protection;
- Environmental conditions; and
- Aesthetics.

Standard Bureau pier types are described and illustrated in the articles that follow. Special corridor projects and signature bridges often have variations of the standard types or entirely unique pier designs.

For analysis and design of frame piers and T-piers the Bureau generally utilizes LEAP Bridge Concrete Substructure (formerly RC-Pier) software supplemented with Bureau-developed spreadsheets where needed for determination of loads. Special pier shapes and loads may be analyzed with STAAD software.

6.6.1.1.1 Frame pier

[AASHTO-LRFD 3.6.5]

A frame (pedestal) pier, as illustrated in Figure 6.6.1.1.1, has a lower construction cost than a T-pier. Thus frame piers are the usual selection for:

- Road overpasses if columns are not required to be designed for the vehicular collision force [BDM 6.6.2.6 and AASHTO-LRFD 3.6.5],
- Railroad overpasses if columns are not required to be designed for the vehicular collision force [BDM 6.6.2.6 and AASHTO-LRFD 3.6.5], and
- Stream or river crossings if piers are not placed in the waterway channel and debris or ice is not a concern.

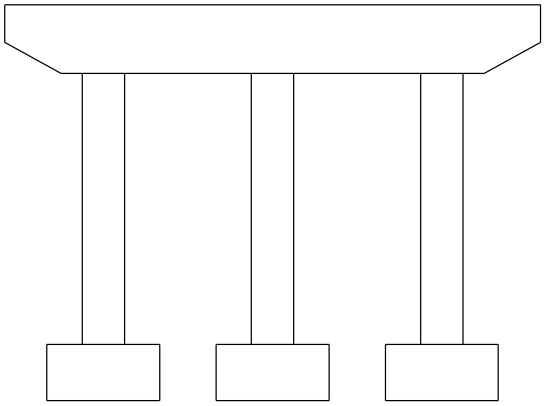

Figure note:

- See text below for dimension guidelines.
- The designer has the choice of constant depth cantilevers or tapered cantilevers.

Figure 6.6.1.1.1. Frame pier with typical cap, columns, and footings

Minimum column spacing should be 16 feet. Typical round column diameters are 30 inches, 36 inches, 42 inches, and 48 inches. Typically, pier cap widths are a minimum of 3 inches wider than column diameter. In most cases dual bridges placed edge to edge should have separate frame piers.

For frame piers the Bureau considers constant depth cantilevers the preferred choice for typical bridges. For bridges requiring aesthetic details the cap cantilevers may be shaped on a case-by-case basis.

Bureau policy is to design the tapered or constant depth cantilevers at the ends of the frame pier cap using conservative dead and live load assumptions [BDM 6.6.2.1, 6.6.2.2, Table 5.4.1.4.1.1].

6.6.1.1.2 T-pier

[AASHTO-LRFD 3.6.5]

Although T-piers (hammerhead piers) have a higher construction cost than frame piers, they have several advantages over frame piers and are substituted for frame piers when any of the following conditions apply:

- The pier is within 30 feet of a roadway and needs to be designed for the vehicular collision force CT [BDM 6.6.2.6 and AASHTO-LRFD 3.6.5].
- The pier is within 25 feet of a railway track and needs to be designed with heavy construction [BDM 6.6.2.6 and AASHTO-LRFD C3.6.5.1]. See Article 2.1.5, “Pier Protection,” in American Railway Engineering and Maintenance-of-Way Association (AREMA), *Manual for Railway Engineering* [BDM 6.6.1.5].
- Stream or river crossings have ice or driftwood flows that are expected to cause lateral loading of the bridge piers. The preliminary guideline is to use T-piers for larger streams, where the drainage area for the bridge exceeds 50 square miles, an area large enough to have considerable ice and debris flow.

The designer should choose approximate proportions for the length of pier cap cantilevers and column width as in Figure 6.6.1.1.2. Columns for T-piers shall be at least 30 inches thick to allow access for workers during construction. Columns with rounded ends should have widths the same as typical round column diameters [BDM 6.6.1.1.1]. Typically pier cap widths should be a minimum of 3 inches wider than column thickness.

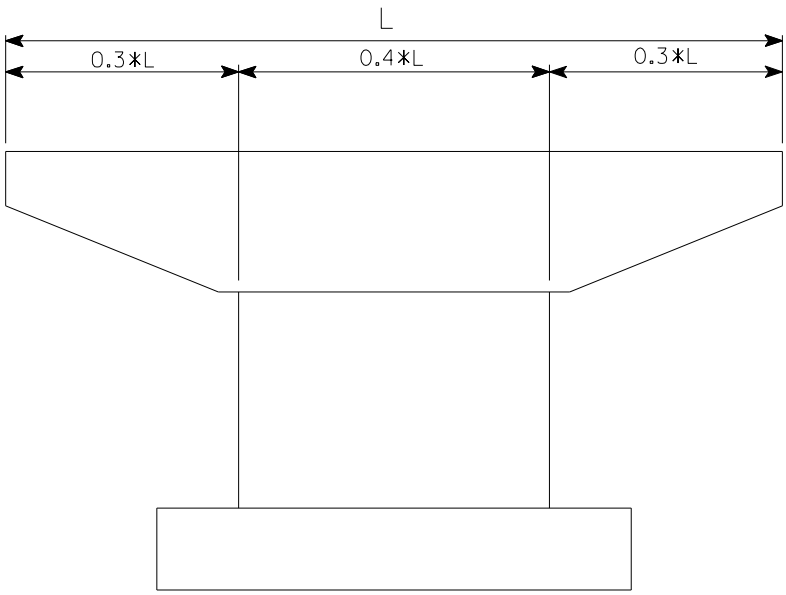

Figure note:

(1) These are approximate dimensions only; the designer should make adjustments as needed for a specific bridge.

Figure 6.6.1.1.2. T-pier with typical pier cap and footing

Bureau policy is to design the tapered cantilevers at the ends of the T-pier cap using conservative dead and live load assumptions [BDM 6.6.2.1, 6.6.2.2, Table 5.4.1.4.1.1].

6.6.1.1.3 Pile bent

Pile bents (P10L bents) are the usual selection for low-level, short-span CCS, PPCB, or RSB bridges. End piles are battered at a 1 horizontal to 12 vertical slope as shown in Figure 6.6.1.1.3-1.

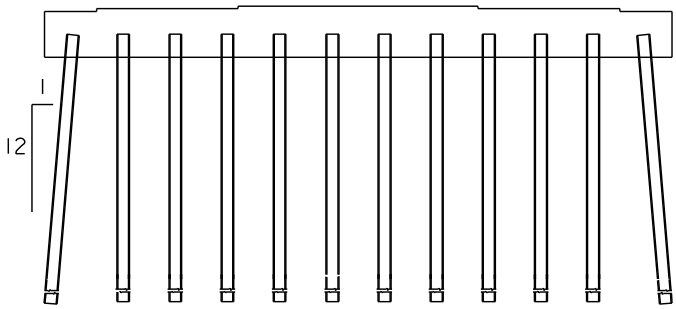

Figure 6.6.1.1.3-1. Pile bent with individual or individually encased piles

Superstructure spans exceeding 100 feet usually will require pile bents with excessive numbers of piles, and for longer spans T-piers or frame piers are a better choice. For stream and river crossings, pile bents usually are appropriate for smaller streams with drainage areas less than 50 square miles.

Piles may be encased steel H-pile shapes, prestressed concrete, or concrete-filled steel pipe.

For stream or river crossings with ice or driftwood flows that are expected to cause lateral loading of the bridge piers, the pile bent shall be fully encased as shown in Figure 6.6.1.1.3-2. Conditions that may

cause lateral loading for smaller streams with drainage areas less than 50 square miles include urban areas with large, paved areas and steep waterway channels that may cause flash flooding.

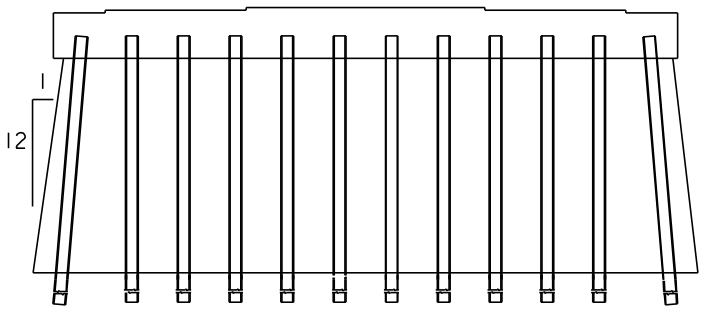

Figure 6.6.1.1.3-2. Pile bent with fully encased piles

Where encasement is required for individual piles or for the entire bent the encasement is to extend below streambed elevation as required in the detailing article of this section (BDM 6.6.4.2.2).

6.6.1.1.4 Diaphragm pier

Solid concrete diaphragm piers (wall piers) are the preferred choice for low-level, short-span slab or PPCB bridges where bedrock is near the surface, and it is impractical to drive piles. Diaphragm piers have lower construction costs than T-piers.

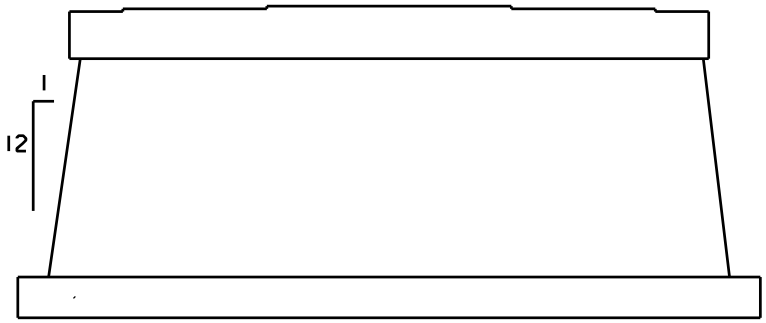

Figure 6.6.1.1.4. Diaphragm pier

The pier wall ends are tapered at a 1 horizontal to 12 vertical slope to serve as an icebreaker. The footing is notched into rock as required in the spread footings article (BDM 6.4.4, 6.4.5).

6.6.1.2 Design information

The “Report of Bridge Soundings” provided for each bridge site by the Soils Design Unit contains recommendations for foundation type and contains the soil logs needed for design. Most Iowa pier foundations are placed on piles that derive support from friction and end bearing. Design of piles is required to be in accordance with the pile section [BDM 6.2].

For horizontally curved bridges the designer will need the roadway design speed for the bridge in order to determine centrifugal force. If the design speed is not provided with other bridge design criteria the designer shall select an appropriate design speed from the Design Bureau’s *Design Manual*, Article 1C-1 and confirm the value with the supervising Unit Leader.

6.6.1.3 Definitions

[AASHTO-LRFD 3.3.2]

Average low water is the elevation given on the type, size, and location plan (TS&L) or, if the elevation is not given, average low water shall be the elevation one foot above the average design stream bed elevation.

Average span length (ASL) is the average length of the two spans adjacent to a pier. See Figure 6.6.1.3.

Bridge length (BL) for structural design is the length from centerline of abutment bearing to centerline of abutment bearing. See Figure 6.6.1.3. In some situations, the bridge length may be taken as the length from expansion joint to expansion joint.

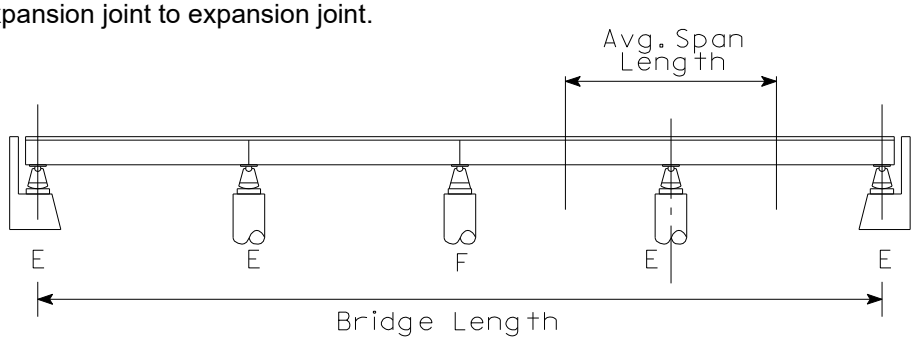

Figure 6.6.1.3. Length definitions

Mass concrete is defined by ACI as “any volume of concrete with dimensions large enough to require that measures be taken to cope with generation of heat from hydration of the cement and attendant volume change to minimize cracking.”

Substructure is any construction below the bearing seats or, in the absence of bearings, below the soffit of the superstructure.

Unit Leader is the supervisor of the Bridges and Structures Bureau Preliminary Bridge Design Unit, Final Design Unit, or Consultant Coordination Unit.

6.6.1.4 Abbreviations and notation

[AASHTO-LRFD 3.3.2, C3.4.1, 3.10.4.2]

A, area of ice floe [BDM 6.6.2.9]; bearing area of an elastomeric pad [BDM 6.6.2.12.3]
A_s, peak seismic ground acceleration coefficient modified by short-period site factor [AASHTO-LRFD 3.10.4.2]
ASL, average span length
BL, bridge length
BR, braking force
CCS, continuous concrete slab
CE, centrifugal force
CR, creep
CT, vehicular collision force
CV, vessel collision force
CWPG, continuous welded plate girder
d, distance from extreme compression fiber to centroid of tension reinforcement
DC1, non-composite dead load of structural components and nonstructural attachments such as girders, deck, haunches, diaphragms, and cross frames [AASHTO-LRFD 3.3.2].
DC2, composite dead load of structural components and nonstructural attachments such as barrier rails and sidewalks, curbs, and medians that are not part of the initial deck pour [AASHTO-LRFD 3.3.2].

DD, downdrag
DW, dead load of wearing surfaces and utilities [AASHTO-LRFD 3.3.2].
E, a pier with a steel reinforced elastomeric expansion bearing [BDM 6.6.2.12.4.1, 6.6.2.12.4.2]
$\mathbf{E_c}$, modulus of elasticity of concrete
$\mathbf{E_p}$, modulus of elasticity of the piles
EH, horizontal earth pressure
EL, locked-in force effects from construction processes and secondary forces from post-tensioning
EQ, earthquake
ES, earth surcharge load
EV, vertical pressure from dead load of earth
F, a pier with a fixed bearing or keyed-in diaphragm [BDM 6.6.2.12.4.1, 6.6.2.12.4.2, 6.6.2.18.2.2]
$\mathbf{F_B}$, friction force for a sliding bronze plate bearing
$\mathbf{F_E}$, friction force for a steel reinforced elastomeric bearing
$\mathbf{F_R}$, friction force for a rocker bearing
FR, friction load on a pier caused by unbalanced forces from sliding bronze plate or rocker bearings
G, shear modulus of elastomer
h, distance from top of footing to top of cap
I, an integral abutment [BDM 6.6.2.12.4.1]
$\mathbf{I_c}$, moment of inertia of the pier column or columns with respect to longitudinal axis of the pier cap
IC, ice load
IM, dynamic load allowance
$\mathbf{I_p}$, moment of inertia of the entire pile group supporting the footing or footings
J, rotational stiffness of the entire pile group supporting the footing or footings for the pier
k, reduction in load intensity for multiple lane loading [BDM 6.6.2.4]; effective length factor for compression members [BDM 6.6.5.1.2.2]
$\mathbf{K_1}$**,** reduction coefficient for ice load
ℓ_u, unsupported length of compression member [BDM 6.6.4.1.2.1]
LL, vehicular live load, HL-93
$\mathbf{L_p}$, effective pile length
LS, live load surcharge
n, number of lines of beams or girders
N, number of lanes likely to become one directional during service life of the bridge
$\mathbf{N_{60}}$ **or** $\mathbf{N_{60}}$**-value**, standard penetration test number of blows per foot corrected to a hammer efficiency of 60%. N_{60} also may be given as **SPT** $\mathbf{N_{60}}$**-value.** The Iowa DOT is in the process of changing specifications and determining hammer calibrations so that N_{60} values will be reported. Until N_{60} values are available the designer may follow past practice and use uncorrected N-values. See the commentary discussion [BDM C6.2.1.4].
P, dead load of the superstructure
P10L, designation for the LRFD pile bent standard [BSB SS P10L], which replaces the P10A pile bent standard
PL, pedestrian live load
PPCB, pretensioned prestressed concrete beam
$\mathbf{Q_{25}}$, 25-year stream flow
r, radius of pier nose [BDM 6.6.2.9]; radius of the rocker pin [BDM 6.6.2.18.1]; radius of gyration [BDM 6.6.4.1.2.1]
R, radius of the rocker [BDM 6.6.2.18.1]
RSB, rolled steel beam
$\mathbf{S_{D1}}$**,** horizontal response spectral acceleration coefficient at 1.0-sec. period modified by long-period site factor [AASHTO-LRFD 3.10.4.2]
SE, settlement
SH, shrinkage
t, total elastomer thickness (without steel laminates) [BDM 6.6.2.12.3]
T, thermal force
TG, temperature gradient
TS&L, type, size, and location
TU, uniform temperature load

w, width of pier stem or diameter of circular pier shaft at level of ice action
WA, water load
WL, wind on live load
WS, wind load on structure
γ_{EQ}**,** load factor for live load applied simultaneously with seismic loads [AASHTO-LRFD C3.4.1]
Δ, longitudinal superstructure movement at top of pier; with subscript, a flexibility of a bearing or substructure component
μ, coefficient of friction between sliding parts in a bronze plate bearing

6.6.1.5 References

American Association of State Highway and Transportation Officials (AASHTO). *The Manual for Bridge Evaluation*. Washington: AASHTO, 2008.

American Concrete Institute (ACI). Guide to Mass Concrete (ACI 207.1R-05) 2012.

American Railway Engineering and Maintenance-of-Way Association (AREMA). *Manual for Railway Engineering—1994 Edition*. Landover: AREMA, 1994.

American Society of Civil Engineers. *Minimum Design Loads for Buildings and Other Structures, ASCE 7-88*. New York: American Society of Civil Engineers, 1990.

CSA International. *Canadian Highway Bridge Design Code, CAN/CSA-S6-00 and Commentary on CAN/CSA-S6-00, Canadian Highway Bridge Design Code.* Toronto: CSA International, 2000.

Dirks, Kermit and Patrick Kam. *Foundation Soils Information Chart, Pile Foundation*. Ames: Iowa Department of Transportation, Office of Road Design, January 1989/September 1994. (a.k.a. **Blue Book**) Generally with the move to LRFD, the ASD-based Blue Book is out-of-date, and its contents have been revised and moved to the BDM. The Blue Book is available from the Soils Design Unit of the Design Bureau.

Haynes, F.D. “Bridge Pier Design for Ice Forces,” *Ice Engineering Information Exchange Bulletin (Cold Regions Research and Engineering Laboratory)*, No. 12, December 1995.

Design Bureau. *Design Manual*. Ames: Iowa Department of Transportation, 2009. (Available on the Internet at: http://www.iowadot.gov/design/dmanual/manual.html?reload)

6.6.2 Loads

[AASHTO-LRFD Section 3]

Applying AASHTO loads [AASHTO-LRFD Section 3] to bridge piers requires that the designer determine numerous loads on the superstructure and substructure, consider the overall behavior of the bridge structure including bearings, and then apply combinations of loads to the piers at several limit states. This article [BDM 6.6.2] gives the policies for determination of the loads, and the following article [BDM 6.6.3] gives the applicable limit state load combinations and considerations for applying the loads to account for behavior of the overall bridge structure.

Unless otherwise noted within this series of articles, the parallel and perpendicular directions are with respect to the pier cap which, for zero skew, will be transverse and longitudinal with respect to the bridge.

6.6.2.1 Dead

[AASHTO-LRFD 3.5.1]

The Bureau classifies superstructure dead load as follows.

- DC1 is noncomposite dead load including beams or girders, deck, haunches, diaphragms, and cross frames.
- DC2 is composite dead load including barrier rails and sidewalks, curbs, and medians that are not part of the initial deck pour.
- DW is composite dead load of wearing surfaces and utilities.

Unit weight of concrete shall be taken at 0.150 kcf regardless of concrete strength.

The deck weight that is part of DC1 shall be distributed to each beam or girder assuming the slab between beams or girders is simply supported and all of the deck weight of an overhang is distributed to the exterior beam or girder.

For design of the pier cap cantilever, the entire weight of the railings, which are part of DC2, shall be applied to the exterior beams in PPCB and RSB bridges and to the exterior girders in CWPG bridges. This policy is intended to produce a conservative design for the pier cap cantilever.

For design of the pier and its foundation, however, the weight of railings shall be distributed as for beams, girders, and bearings [BDM 5.4.1.2.1, 5.5.2.2.1, 5.7.2.1]. For superstructures with roadway widths no greater than 44 feet the weight of railings shall be distributed equally to all beams or girders. For superstructures with roadway widths greater than 44 feet each railing along the deck edge shall be distributed one-half to the exterior beam or girder, one-quarter to the first interior beam or girder, and one-quarter to the second interior beam or girder.

Raised sidewalk and other heavy DC2 loading on the exterior beam or on the overhanging slab may be partially distributed to interior beams at the discretion of the supervising Unit Leader.

For a typical CCS, PPCB, CWPG, or RSB bridge the Bureau requires a future wearing surface load of 0.020 ksf, which is part of the DW load. The future wearing surface shall be distributed equally to all beams in PPCB and RSB bridges and equally to all girders in CWPG bridges.

For design of piers in PPCB, CWPG, and RSB bridges the designer shall apply DC2 and DW assuming continuity of beams and girders, except at expansion joints [BDM Table 5.4.1.4.1.1, 5.5.2.4.1.1].

For pile bents the weight of the encasement, whether for individual piles or for a pier wall, shall be included in the dead load for the pile bent design.

For ordinary Iowa soils assume a unit weight of 0.120 kcf when computing downward pressure due to earth fill above footings (EV). Under high water conditions scour may remove the soil load above footings, and the potential loss of load shall be considered in design.

Unit weights for materials not covered above may be taken from the AASHTO-LRFD Specifications [AASHTO-LRFD Table 3.5.1-1].

6.6.2.2 Live

[AASHTO-LRFD 3.6.1.1, 3.6.1.2, C3.6.1.2.1, 3.6.1.3, C3.6.1.3.1, 3.6.1.6]

The number of design lanes shall be determined according to the AASHTO-LRFD Specifications [AASHTO-LRFD 3.6.1.1.1].

Unless special requirements govern the design, vehicular live load (LL) for piers shall be HL-93 [AASHTO-LRFD 3.6.1.2]. It shall be applied as discussed in the AASHTO LRFD Specifications [AASHTO-LRFD 3.6.1.3].

In unusual situations identified by the Chief Structural Engineer, where a bridge will experience a high percentage of truck traffic, accumulation of trucks due to traffic flow control, or special industrial loads, the designer will need to consider additional loading as discussed in the AASHTO LRFD Specifications commentary [AASHTO-LRFD C3.6.1.2.1, C3.6.1.3.1]. In these situations the designer shall consult with the Chief Structural Engineer.

For determining live loading on a pier, the 10-foot wide HL-93 lane load may be placed anywhere within a design traffic lane as indicated in Figure 6.6.2.2. The wheel loads for the HL-93 truck or tandem then will be two feet inside the lane boundaries. The live load shall be arranged within design traffic lanes to produce the beam or girder reactions required for maximum forces and moments in the pier.

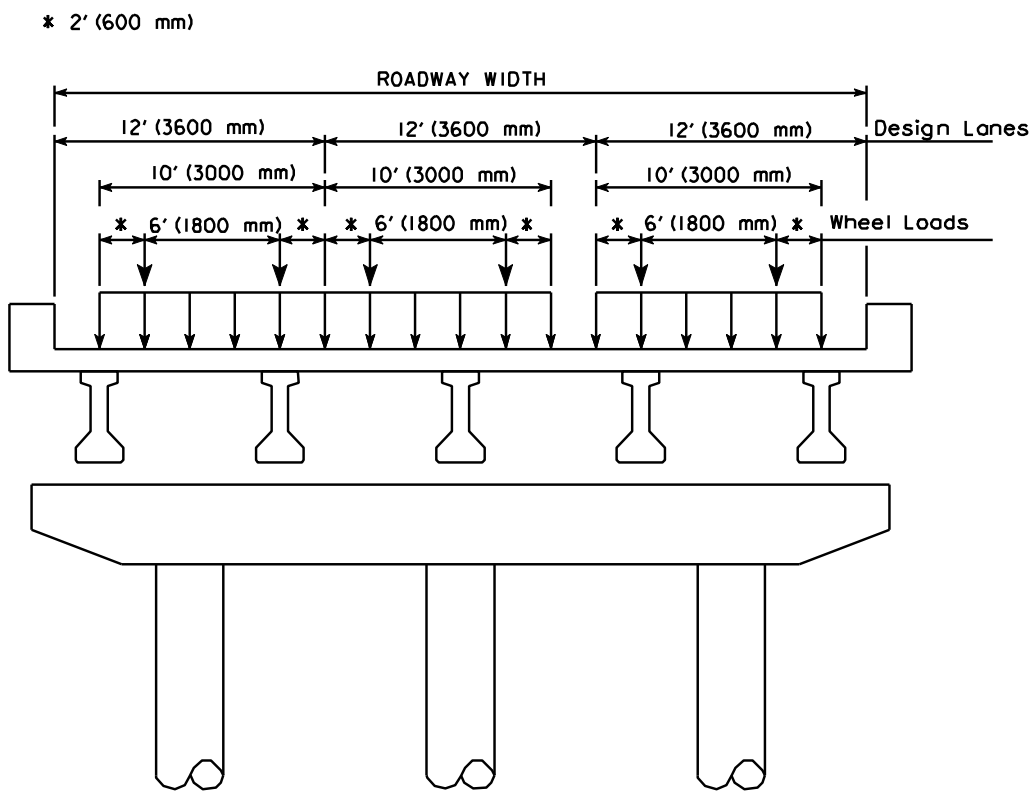

Figure 6.6.2.2. Placement of lane and truck loads within lane boundaries

For design of piles, footings, columns, frames, and pier caps (except as noted below) the live load shall be distributed to each interior beam or girder with the assumption that the slab between members is simply supported. The live load shall be distributed to the exterior beam or girder with the assumption that all of the live load on the slab overhang is transferred to the exterior member.

Where applicable, modification of load intensity due to multiple presence of live load shall be considered [AASHTO-LRFD 3.6.1.1.2].

When designing the cantilever portion of a pier cap containing only one beam or girder (as illustrated in Figure 6.6.2.2), the designer shall use a conservative load to determine moments and shears. This load

only is used to analyze the moment and shear in the cantilever portion of the cap. It is not used to load the frame or to analyze other portions of the cap, column, or footing. This load is determined for PPCB bridges with the shear distribution factor given in the PPCB live load article [BDM 5.4.1.2.2] and for CWPG bridges with the shear distribution factor given in the CWPG live load article [BDM 5.5.1.2.2]. For skewed bridges the designer shall include the shear increase [AASHTO-LRFD 4.6.2.2.3c]. If the cantilevered pier cap supports two or more beams or girders, the designer shall use the distribution noted above for design of the cap cantilever.

Sidewalk and other live loads shall be added to the vehicular live load when applicable. A pedestrian live load (PL) of 0.075 ksf shall be applied to all sidewalks wider than 2.0 feet [AASHTO-LRFD 3.6.1.6] and considered simultaneously with the vehicular live loads.

For design of piers in PPCB, CWPG, and RSB bridges the designer shall apply the live load assuming continuity of beams and girders, except at expansion joints [BDM Table 5.4.1.4.1.1, 5.5.2.4.1.1].

6.6.2.3 Dynamic load allowance

[AASHTO-LRFD 3.6.2.1]

The dynamic load allowance (IM) shall be applied to truck or tandem loads in accordance with the AASHTO LRFD Specifications [AASHTO-LRFD 3.6.2.1].

The IM shall be applied to the design of the following pier components:

- The portion of a pier above the footing; and
- Piles in a pile bent, including the portion of the piles below ground line.

The IM shall not be applied to the design of the following pier components:

- Frame pier and T-pier footings and piles, including piles subject to scour; and
- Drilled shafts below footings.

For a column integral with a drilled shaft the designer may choose to exclude or, as a conservative design simplification, may choose to include the IM on the drilled shaft below ground.

6.6.2.4 Centrifugal force

[AASHTO-LRFD 3.6.3]

For a curved bridge the designer shall apply centrifugal force (CE) in any load combination that includes HL-93 live load and should not apply that live load without centrifugal force. Centrifugal force shall be determined according to the AASHTO-LRFD Specifications [AASHTO-LRFD 3.6.3] with the exceptions discussed below.

Design speed shall be taken as listed for the appropriate highway classification in Article 1C-1 of the Design Bureau's *Design Manual* unless otherwise given in specific bridge design criteria prepared by the preliminary design section or Consultant Coordination Unit. Depending on the highway classification the design manual gives design speeds from 70 mph to 30 mph.

The number of lanes loaded for CE shall be tied to the number of lanes loaded for live load. Each bridge pier shall resist the total CE force. The force shall not be distributed among the piers.

The supervising Unit Leader has the final authority for determining whether or not to apply centrifugal force for unusual bridge configurations.

6.6.2.5 Braking force

[AASHTO-LRFD 3.6.4]

The braking force (BR) shall be determined according to the AASHTO-LRFD Specifications [AASHTO-LRFD 3.6.4] except that the number of lanes used to determine the total force shall be the number of lanes likely to become one directional during service life of the bridge. For a standard-width bridge designed for two-way traffic with a total of three design lanes, take the number of lanes as two, assuming a truck passing another truck on the bridge. For wider bridges designed for two-way traffic with more than three design lanes, it is overly conservative to apply the BR to all lanes. Consult with the supervising Unit Leader for the number of lanes in which to apply the BR.

For bridges with any type of friction acting bearings the BR shall be distributed only to the piers and abutments with fixed or elastomeric bearings. For bridges without rocker, bronze plate, or other friction-acting bearings the BR shall be distributed to piers and abutments based on average span length as illustrated in Figure 6.6.2.4.

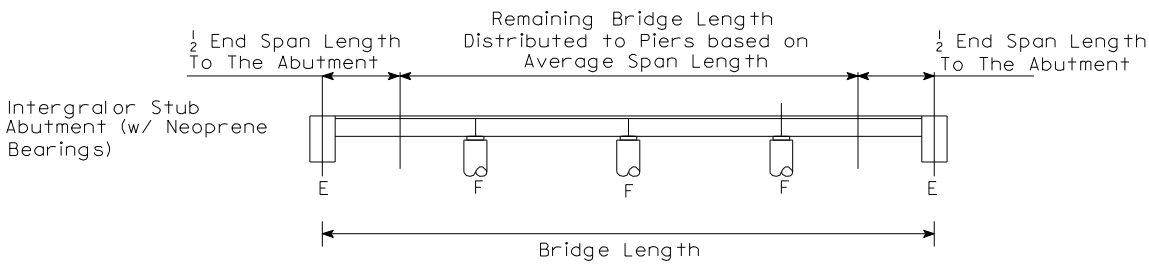

Figure 6.6.2.4. Distribution of BR for bridges without friction-acting bearings

For bridges with lengths between expansion joints greater than 1000 feet the designer shall review the BR with the Chief Structural Engineer. It may be advisable to increase the BR by adding trucks when computing the force.

For skewed piers the application of BR at 6 feet above the deck will create a moment parallel with the pier cap. The designer may apply the moment by means of vertical forces applied at beam or girder bearings.

6.6.2.6 Vehicular collision force

[AASHTO-LRFD-2020 3.6.5]

As a matter of general policy where there is sufficient space, the Bureau will locate piers outside the clear zone of the roadway and more than 25 feet from a railway. Clear zones for roadways at many locations are equal to or greater than 30 feet. Design for vehicular collision force (roadway) or the use of heavy construction (railway) is not required for piers located outside the acceptable clear zone for roadway structures and 25 feet for railway structures.

If a pier needs to be located within 25 feet of a railway then the use of heavy construction, as defined in the AREMA *Manual for Railway Engineering*, is required. AREMA defines heavy construction for piers as 2’-6 minimum thickness by 12’-0 minimum length, parallel to the track.

If a pier needs to be located within the acceptable clear zone of a roadway and it has been determined that redirecting or absorbing the collision is not feasible, the designer shall investigate an exemption as described in the AASHTO LRFD Specifications Commentary [AASHTO-LRFD-2020 C3.6.5.1]. The designer shall consult with the supervising Unit Leader and the Bridge Project Development Engineer regarding the exemption. In addition to the AASHTO exemption, in urban areas with low traffic speeds the Bridge Project Development Engineer may grant an exemption on a case-by-case basis. Consideration shall be given to the traffic control devices present along the route.

A pier within the acceptable clear zone of a roadway that does not have an exemption either shall be designed for the 600-kip vehicular collision force (CT) or shall include one of the following from the AASHTO LRFD Specifications [AASHTO-LRFD-2020 3.6.5.1].

- Substructure components that are backed by soil;
- Reinforced concrete pier components that are at least 3 feet thick and have a concrete cross-sectional area greater than 30.0 square feet as measured in the horizontal plane at all elevations from the top of the pier foundation to a height of at least 5 feet above the grade.;
- Piers supporting a bridge superstructure where it is shown by calculation that the superstructure will not collapse with one column missing when subjected to the full dead load with a 1.1 load factor and the live load including dynamic load allowance in the permanent travel lanes with a load factor of 1.0. The Bureau does not prefer this method.; or
- Pier walls and multi-column piers with struts between columns that have been designed and detailed as MASH TL-5 longitudinal traffic barriers.

Investigations in the Bureau have indicated that providing structural resistance in the pier usually will be a better and more economical option than providing redirection or absorption. Where the design choice is to redirect or absorb the collision load, a protective rail shall be included as part of the highway design, that consists of a minimum 42-inch tall MASH TL-5 barrier located such that the top edge of the traffic face of the barrier is 3.25 ft or more from the face of the substructure component being protected. In urban areas where a median barrier is necessary, the Bureau prefers using a 54-inch high barrier routed around and directly adjacent to the pier in order to limit intrusion into the shoulder. In such cases the pier shall be designed for the collision force since the barrier is not structurally independent. Designers should review the zone of intrusion guidelines as found in BDM 3.14.

In some cases the Design Bureau may plan for safety cables or rails to prevent vehicles from impacting a bridge pier. However, the cables or rails do not satisfy the LRFD pier protection requirement [AASHTO-LRFD-2020 3.6.5.1] since their function is primarily passenger safety. The designer should consult with the Design Bureau to determine whether the cables or rails may be replaced with a crashworthy barrier, or if additional pier protection measures are required.

When piers must be designed for the vehicular collision force the Bureau prefers the following pier types in the order in which they are listed:

- T-pier or wall pier
- Frame pier without a crash wall, or
- Frame pier with a crash wall with approval of Bridge Project Development Engineer.

T-piers and wall piers within the acceptable clear zone of a roadway that are at least 3-feet thick and have a concrete cross-sectional area greater than 30.0 square feet are deemed to meet the 600-kip collision force requirements in AASHTO and no further design of the pier is required with respect to collision.

Frame piers without a crash wall are deemed to meet the 600-kip collision force requirements in AASHTO and no further design of the pier is required with respect to collision when the following stipulations are met:

- Three or more columns connected by a continuous pier cap;
- Minimum column diameters of 4.0 feet;
- Vertical reinforcement for the columns shall be the greater of what is required by design (not including the Extreme Event II loading) or a minimum of 1.0% of the gross concrete section; and
- Grade 60 shear reinforcement consisting of a minimum #5 tie bar which is continuously wound (spiral) with a maximum vertical pitch of 4 inches. Individual ties shall not be substituted.

When making decisions regarding any of the options discussed above, the designer shall consider aesthetics, maintenance, and cost as those factors apply to the specific bridge pier.

6.6.2.7 Water

[AASHTO-LRFD 3.4.1, 3.7]

The Preliminary Bridge Design Unit or Preliminary Design Consultant will set stream and river design conditions for use in determining water loads. However, not all of the information listed below will be given

on the preliminary design plan (type, size, and location, commonly called the TS&L) in every case, and the designer should consult the referenced articles or preliminary bridge designer as needed.

- Design high water elevation will be given on the longitudinal section on the TS&L. Design high water is intended to be used for determining loads at the service and strength limit states.
- Design ice elevation [BDM 6.6.2.9] is intended to be used for determining ice loads at the extreme event limit state.
- Average low water [BDM 6.6.1.3], if given on the TS&L, will be listed in the hydraulic data. Average low water is intended to be used for determining loads at the service and strength limit states.

The Preliminary Bridge Design Unit or Preliminary Design Consultant also will set the scour elevations for the design and check floods [BDM 6.6.4.1.3.1] and list the elevations in the hydraulic data, but these elevations are used to check piles [BDM 6.6.4.1.3.1], not to determine water loads.

The buoyancy load shall be consistent with the water level from which the stream and ice flow pressures are determined. For computing the buoyancy of soil under water, assume that the soil volume is one-third void. The buoyancy of submerged soil thus will be about 0.042 kcf, two-thirds of the density of water.

The TS&L will report average stream velocity (or bridge velocity) for the design high water flood event, and this velocity should be used to determine loads at the strength and service limit states.

For piers nominally parallel with stream flow in streams with low average velocities, 0 to 5 ft/sec, stream flow pressures (WA) may be neglected. However, if there is any skew between the pier and stream flow, the designer shall determine the longitudinal and lateral pressures as described below.

For piers located in streams with average velocities greater than 5 ft/sec, both longitudinal and lateral stream flow pressures (WA) shall be determined according to the AASHTO LRFD Specifications [AASHTO-LRFD 3.7.3]. Computed longitudinal pressure shall be based on the drag coefficient for debris lodged against the pier [AASHTO-LRFD Table 3.7.3.1-1]. Computed lateral pressure shall be based on the drag coefficient for the actual pier skew angle with respect to stream flow [AASHTO-LRFD 3.7.3.2].

The designer shall apply in separate load combinations the stream flow force for design high water at its appropriate elevation and the force for average low water at its elevation.

If the design flood inundates part of or all of the superstructure the designer shall check a special extreme event load case. The load case shall include both vertical and lateral loads on the piles under check flood conditions. The designer will need to obtain an estimate of the check flood velocity from the preliminary designer. Because this condition is unusual the designer shall consult with the supervising Unit Leader.

6.6.2.8 Wind

[AASHTO-LRFD 3.4.1, 3.8]

AASHTO LRFD Specifications require that lateral wind pressures and forces be applied to exposed areas of the superstructure, to exposed areas of the substructure, and to vehicles on the superstructure. In addition, in the Strength III limit state, an upward force is to be applied to the underside of the deck when the wind skew angle is 0 degrees with respect to the superstructure. Although the upward force also is indicated for the Service IV limit state [AASHTO-LRFD Table 3.4.1-1] typical bridges do not have the prestressed concrete columns for which the limit state applies. In addition to the basic wind loads described in this article, see the load application article [BDM 6.6.3] for application of these loads to the entire bridge structure.

6.6.2.8.1 Horizontal pressure on superstructure

[AASHTO-LRFD 3.8.1, 3.8.2]

The design wind pressure, P_Z, on the superstructure for each applicable limit state shall be determined as:

$$P_Z = (2.56*10^{-6})*(V^2)*(K_Z)*(G)*(C_D)$$

In general, the Bureau determines wind loads using the wind pressure criteria in Table 6.6.2.8.1.

Table 6.6.2.8.1 Design wind pressure criteria

Factors Affecting Design Wind Pressure, P_Z		**Limit States with Wind Loads**		
		Strength III	**Strength V**	**Service I**
Design 3-second gust wind speed, V (1)		115 mph	80 mph	70 mph
Pressure exposure and elevation coefficient, K_Z		$K_Z(C)$ (2)	1.00	1.00
Gust effect factor, G		1.00	1.00	1.00
Drag coefficient, C_D, on I-girder and slab superstructures		1.30	1.30	1.30

Table notes:

(1) The wind speed for Strength III is taken from the map in AASHTO-LRFD Figure 3.8.1.1.2-1. Wind speeds for Strength V and Service 1 can be found in AASHTO-LRFD Table 3.8.1.1.2-1.

(2) The coefficient $K_Z = K_Z(C)$ for Strength III assumes typical Iowa conditions consisting of ground surface roughness category C and wind exposure category C. Consult with supervising Unit Leader before using a different coefficient.

The structure height, Z, used to determine the pressure exposure and elevation coefficient, K_Z, for the Strength III limit state shall ordinarily be measured from the low ground or low water surface to the top of the railing, but must be equal to at least 33 feet.

Both transverse (WS_t) and longitudinal (WS_l) wind forces (with respect to the superstructure) shall be applied to each pier based on wind area for the pier's average span length (ASL).

WS = (Wind Area Per Unit Length)*(ASL)*(P_Z)

Where:

Wind Area Per Unit Length = the sum of the projected railing, deck, and exterior beam or girder area per unit length as indicated in Figure 6.6.2.8.1. Units are ft^2/ft.

For typical bridges with spans not exceeding 155 feet the designer may use a simplified wind load of 100% of P_Z in the transverse direction applied simultaneously with 25% of P_Z in the longitudinal direction rather than using multiple skewed wind load cases [AASHTO-LRFD 3.8.1.2.3a]. With supervising Unit Leader approval, the criteria can be extended for typical bridges to include structure heights greater than 33 feet.

Both WS_t and WS_l shall be applied simultaneously at the center of gravity of the exposed area as shown in Figure 6.6.2.8.1, except as modified in load application articles [BDM Tables 6.6.3.4 and 6.6.3.5].

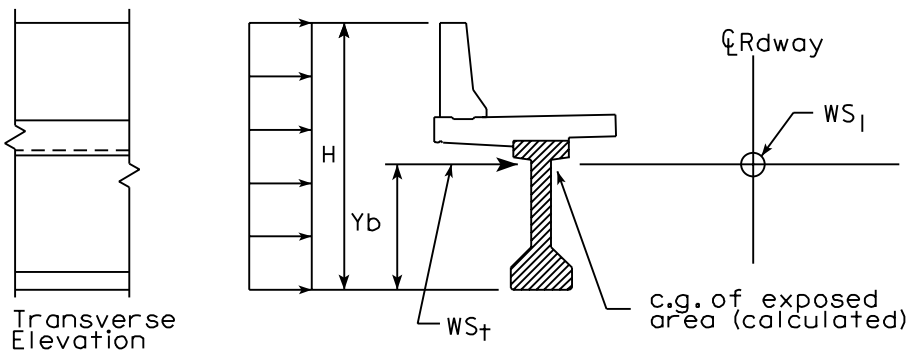

Figure 6.6.2.8.1. Application of wind load to superstructure

For bridges with friction-acting expansion bearings [BDM 6.6.3.3.3], the WS_l based on ASL shall be distributed according to the rules in a subsequent article [BDM Table 6.6.3.4].

6.6.2.8.2 Horizontal pressure on substructure

[AASHTO-LRFD 3.8.1, 3.8.2]

The design wind pressure, P_Z, on the substructure for each applicable limit state shall be determined using the criteria in BDM Table 6.6.2.8.1 except that the drag coefficient, C_D, shall be increased to 1.60 for the Strength III, Strength V, and Service I limit states.

The structure height, Z, used to determine the pressure exposure and elevation coefficient, K_Z, for the substructure in the Strength III limit state shall ordinarily be measured from the low ground or low water surface to the top of the railing.

For typical bridges, the designer may simplify wind loading by applying the design wind pressure P_Z on the substructure simultaneously in the longitudinal and transverse directions rather than using multiple skewed wind load cases [AASHTO-LRFD 3.8.1.2.3b].

6.6.2.8.3 Vehicles on superstructure

[AASHTO-LRFD 3.8.1.3]

Both transverse (WL_t) and longitudinal (WL_l) wind forces (with respect to the superstructure) on vehicles shall be determined as required in the AASHTO-LRFD Specifications [AASHTO-LRFD 3.8.1.3]. For usual girder and slab bridges, wind forces on live load are based on components applied over the pier's average span length (ASL), except as modified to account for unusual features of the bridge structure [BDM 6.6.3].

WL = (Component) (ASL)

Where:

Normal or parallel component in klf shall be taken from AASHTO-LRFD Table 3.8.1.3-1.
ASL = average span length in feet.

Both WL_t and WL_l shall be applied simultaneously at 6 feet above the roadway surface, except as modified in load application articles [BDM Tables 6.6.3.4 and 6.6.3.5].

For typical bridges with spans not exceeding 155 feet the designer may use a simplified wind load of 0.100 klf in the transverse direction applied simultaneously with 0.040 klf in the longitudinal direction rather than using multiple skewed wind load cases [AASHTO-LRFD 3.8.1.3].

For bridges with friction-acting expansion bearings [BDM 6.6.3.3.3], the WL_l based on ASL shall be distributed according to the rules in a subsequent article [BDM Table 6.6.3.4].

6.6.2.8.4 Vertical pressure on superstructure

[AASHTO-LRFD 3.8.2]

To check overturning of all piers, an upward vertical wind pressure of 0.020 ksf shall be applied to the underside of the superstructure as described in the AASHTO-LRFD Specifications [AASHTO-LRFD 3.8.2]. For typical bridges the pressure is applied only in the Strength III load combination when the wind skew angle with respect to the superstructure is zero degrees. The designer shall check the structure both with and without the vertical load.

6.6.2.9 Ice

[AASHTO-LRFD 3.9]

All Iowa bridges subject to ice conditions shall be designed for ice loads (IC). Ice loads always are considered for larger streams and rivers when the drainage area is 50 square miles or greater. Ice loads may be considered for smaller streams depending on history and site conditions.

Effective ice strength shall be taken as 24.0 ksf [AASHTO-LRFD 3.9.2.1].

Design ice thickness for all Iowa streams and rivers except the Mississippi and Missouri Rivers shall be selected from Table 6.6.2.9 based on the Iowa DOT District.

Table 6.6.2.9. Design ice thickness by Iowa DOT District

District	Thickness, inches
5	15
1, 4, 6	17
2, 3	19

The ice thicknesses for Mississippi and Missouri River bridges are special cases that need to be investigated as recommended by the Chief Structural Engineer.

Ice crushing and flexing forces for piers in Iowa streams and rivers shall be determined in accordance with the AASHTO-LRFD Specifications [AASHTO-LRFD 3.9.2].

For small streams the designer may consider reduction of the stream or river ice load for a bridge less than 300 feet long [AASHTO-LRFD 3.9.2.3]. Bridge length is a conservative assumption for stream width. The reduction factor K_1 shall be interpolated from the commentary table [AASHTO-LRFD Table C3.9.2.3-1] based on A/r^2 (A = area of ice floe, r = radius of pier nose). The designer may estimate area of ice floe as a circular area with diameter equal to the larger of two-thirds of the opening between the pier and abutment, or between piers.

The designer should note that the AASHTO-LRFD Specifications require forces both parallel with and perpendicular to the pier shaft [AASHTO-LRFD 3.9.2.4]. Unless the preliminary bridge plan (type, size and location, commonly called the TS&L) clearly shows a skew between pier and stream or river flow, the designer may assume the pier parallel to flow condition [AASHTO-LRFD 3.9.2.4.1]. The designer also may assume the friction angle, θ_f [AASHTO-LRFD 3.9.2.4.1], to be 6 degrees unless more precise information is available.

For pier shafts skewed to stream flow the total force on the pier will be determined based on projected pier width [AASHTO-LRFD 3.9.2.4.2]. The projected width will increase the ice load and, if the load seems excessive, the designer should investigate a circular pier shaft or other pier alternatives.

Unless elevation of ice is specified on the TS&L, the ice load shall be applied for the Extreme Event II load combination midway between design high water and average low water elevation.

For bridges over lakes, static ice pressure (lake ice) [AASHTO-LRFD 3.9.3] shall be considered. Some guidance is available in "Bridge Pier Design for Ice Forces" [BDM 6.6.1.5]. The designer shall consult with the supervising Unit Leader for the value to be used in design.

6.6.2.10 Earthquake

[AASHTO-LRFD C3.4.1, 3.10.3.1, 3.10.4.2, 3.10.6, 3.10.9.2, 4.7.4.1, 4.7.4.4]

Based on the acceleration coefficient S_{D1} [AASHTO-LRFD 3.10.4.2] for Site Class A though E [AASHTO-LRFD 3.10.3.1], all of Iowa shall be classified as Seismic Zone 1 [AASHTO-LRFD 3.10.6] for design of typical bridges. For unusual cases where the site is classified as Site Class F, and for Missouri River and Mississippi River bridges the designer shall determine the Seismic Zone based on the specific site characteristics.

Bridges in Seismic Zone 1 need not be analyzed for seismic forces (EQ) [AASHTO-LRFD 4.7.4.1]. However, connections that attach the superstructure to a pier so as to restrain relative movement shall be designed for horizontal connection forces. The acceleration coefficient A_S [AASHTO-LRFD 3.10.4.2] will vary below and above 0.05 in Iowa, generally below in northern Iowa and above in southern Iowa. Therefore the horizontal design connection force in restrained directions shall be taken as either 0.15 (if $A_s < 0.05$) or 0.25 (if $A_s \geq 0.05$) times the vertical reaction due to the tributary permanent load [AASHTO-LRFD 3.10.9.2]. The Bureau neglects any live load in determining the connection force, consistent with $\gamma_{EQ} = 0.0$ [AASHTO-LRFD C3.4.1].

For a pier at a deck expansion joint the designer shall provide the minimum bridge seat width for the expansion bearings [AASHTO-LRFD 4.7.4.4].

6.6.2.11 Earth pressure

[AASHTO-LRFD 3.11]

For two-span bridges with integral abutments, unbalanced passive soil pressure shall be considered along with thermal force [BDM Table 6.6.2.12.4.1].

6.6.2.12 Uniform temperature

[AASHTO-LRFD 3.4.1, 3.12.2]

Application of loads caused by temperature change to piers involves consideration of the entire bridge structure—superstructure, bearings, piers, abutments, and foundations. Under the AASHTO Standard Specifications, pier loads caused by thermal expansion or contraction of the superstructure were placed in a single category but, under the AASHTO LRFD Specifications, there are two load categories that apply depending on type of bearing: uniform temperature (TU) and friction (FR), each with different load factors. Considering temperature and friction, as well as creep (CR) and shrinkage (SH), the Bureau intends to use the gross moment of inertia for pier force computations.

The uniform temperature (TU) load category relates to steel reinforced elastomeric bearings, fixed bearings, and keyed diaphragms. For uniform temperature the strength limit state load factors are 0.50/1.20, and the service limit state load factors are 1.00/1.20. In each case the first, smaller factor is intended to be applied to forces, and the second, larger factor is intended to be applied to deformations [AASHTO-LRFD 3.4.1].

The friction (FR) category [BDM 6.6.2.18] relates to friction-acting bearings such as sliding plates and rockers. At the strength, extreme event, and service limit states the load factor is to be taken as 1.00 [AASHTO-LRFD 3.4.1].

In cases where the bridge has both steel reinforced bearing pads and sliding bronze plate or rocker bearings the controlling pier forces from temperature and friction may not be obvious due to the difference in load factors. The designer should start with the friction forces, conservatively assuming a load factor of 1.00. After iterations to determine the controlling force combinations the designer shall consult with the supervising Unit Leader.

In-plane pier thermal forces also fall under the uniform temperature category [BDM 6.6.2.12.6].

6.6.2.12.1 General

[AASHTO-LRFD 3.4.1]

Pier thermal forces develop as temperatures fluctuate and cause changes in length of the superstructure. Those length changes are transmitted partially or fully through the bearings and keyed-in diaphragms to the tops of piers. Longitudinal superstructure movements applied to the tops of non-skewed piers cause longitudinal forces as piers resist the movements, and longitudinal movements applied to skewed piers cause forces both perpendicular to and parallel with the piers.

Forces applied to piers will vary depending on the following factors:

- Location of pier with respect to temperature movement,
- Symmetry or lack of symmetry in spans,
- Variation in column heights and cross sections,
- Skew of piers with respect to superstructure,
- Type of bearing, which will result in either uniform temperature (TU) or friction (FR) forces, and
- Amount of foundation fixity.

The designer shall consider all of these factors as they apply to the overall bridge structure.

Bureau policy is to use fixed bearings or keyed-in diaphragms at piers wherever practical and cost effective. In order to reduce calculated thermal forces on fixed piers the designer may consider the following reductions, where applicable.

- Pier column bases may be considered partially fixed when founded on piles. The degree of fixity depends on the moment of inertia of the pile group, pile type, and pile length [BDM 6.6.2.12.3]. Partial fixity will reduce rotational stiffness of the column base, thus reducing thermal forces in the pier. This partial fixity assumption does not apply to piers founded on rock and will have little effect if piles are short.
- For skewed T-piers supporting PPCB superstructures with plain neoprene bearing pads, the designer may reduce horizontal deflection computed for the pier's strong axis by 1/16 inch. For the typical keyed-in diaphragm detail and large thermal forces with respect to the pier's strong axis, the neoprene pads and resilient joint filler will permit some movement in the pier keyway. The Bureau therefore permits the reduction in horizontal deflection and associated reduction in thermal force.

Because of the 0.5 LRFD load factor for uniform temperature (TU) forces in concrete substructures, which results in a reduction from design under the AASHTO Standard Specifications, LRFD thermal forces on typical piers are likely to be smaller than those applied under service load design. However, if fixed bearings cause excessive pier forces, or if fixed bearing pier designs are uneconomical, the designer may use expansion bearings. Because the typical bridge has either integral abutments assumed to be similar to expansion bearings for thermal movements or stub abutments with expansion bearings, at least one of the pier bearings shall be fixed, unless an exception is approved by the supervising Unit Leader.

For steel substructures the TU load factor is 1.0. See the discussion regarding TU load factors in the AASHTO LRFD Specifications [AASHTO-LRFD 3.4.1].

For typical bridges, in lieu of a special analysis, the designer may use the criteria in the articles that follow and in the load application article [BDM 6.6.3]. However, conditions such as highly irregular span lengths,

large variations in pier heights or stiffnesses, skews greater than 30 degrees, unusually large deck widths, unusual bearings or combinations of bearings, and unusual pier types will require special analysis and consultation with the supervising Unit Leader.

6.6.2.12.2 Design temperature changes

[AASHTO-LRFD 3.12.2]

Based on experience, the Bureau uses the design temperature ranges and thermal coefficients for cold climate in Table 6.6.2.12.2 rather than Procedure A or B in the AASHTO LRFD Specifications [AASHTO-LRFD 3.12.2]. No bearing setting factors are required for pier design.

Table 6.6.2.12.2. Design temperature ranges and thermal coefficient

Type of Superstructure	Design Temperature Range	Thermal Coefficient
Steel	75°F each way from 50°F, 150°F temperature range	0.0000065 /°F
Concrete	50°each way from 50°F, 100°F temperature range	0.0000060 /°F

When determining in-plane thermal forces for reinforced concrete frame piers, use the concrete temperature range and thermal coefficient in the table above.

6.6.2.12.3 Out-of-plane forces

[AASHTO-LRFD 14.7.6.2]

The thermal force (TU) for a non-skewed pier is based on the amount of longitudinal temperature movement in the superstructure at the pier. The design movement for a specific pier shall be determined from the overall arrangement of piers, spans, abutments, and bearings for the bridge, and the pier force shall be determined considering the movement and the additional rules for unbalanced forces in the next article [BDM 6.6.2.12.4].

Pier design software generally will use the stiffness method to determine pier thermal forces but, for hand computations, the thermal force applied to a pier can be determined by the flexibility method as outlined below. The longitudinal temperature movement in the superstructure is equated to the sum of applicable flexibilities of the bearing, pier, and pile foundation. Flexibilities that do not apply or that the designer chooses to neglect are taken as zero.

$$\Delta = \Delta_1 + \Delta_2 + \Delta_3$$

Where:

Δ = longitudinal superstructure movement at top of the pier
Δ_1 = shear flexibility of the elastomeric bearing pads
Δ_2 = bending flexibility of the pier column(s)
Δ_3 = rotational flexibility of the piling group(s) below the pier footing(s)

Figure 6.6.2.12.3-1 illustrates the superstructure movement and flexibilities for two expansion piers with elastomeric bearings and founded on piles.

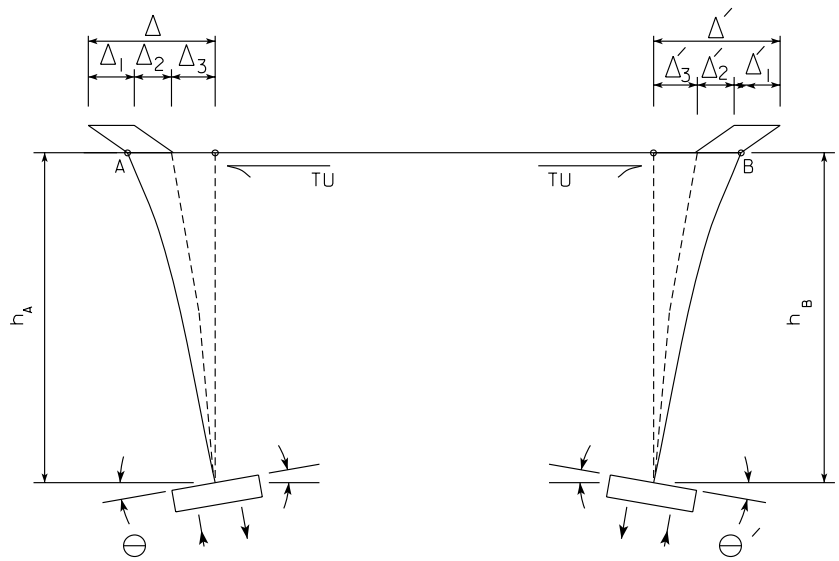

Figure 6.6.2.12.3-1. Expansion piers with steel reinforced elastomeric bearings and pile foundations loaded with opposing superstructure movements

The shear flexibility applies only to expansion piers with steel reinforced elastomeric bearings and is determined as follows.

$$\Delta_1 = \frac{(TU)t}{nAG}$$

Where:

TU = thermal force, k
t = total elastomer thickness (without steel laminates), in
n = number of steel reinforced elastomeric bearings on the pier. For pretensioned prestressed concrete beams there typically are two bearings per beam line, but for continuous welded plate girders there typically is only one bearing per beam line.
A = bearing area of an elastomeric bearing, in^2
G = shear modulus for the elastomer, ksi. Because the Bureau specifies elastomer by durometer, the value selected for G shall be the maximum for the specified durometer as listed in Table 6.6.2.12.3-1 [AASHTO-LRFD 14.7.6.2].

Table 6.6.2.12.3-1. Maximum shear moduli for elastomer specified by durometer

Durometer	Maximum shear modulus, G ksi
50	0.130
60	0.200

The bending flexibility applies to all piers and is determined as follows.

$$\Delta_2 = \frac{(TU)h^3}{3E_c I_c}$$

Where:

TU = thermal force, k
h = distance from top of footing to top of cap, in
E_c = modulus of elasticity of concrete, ksi
I_c = moment of inertia of the pier column or columns with respect to the longitudinal axis of the pier cap, in^4

The piling group rotational flexibility applies only to piers supported on piles and is determined as follows.

$$\Delta_3 = \frac{(TU)h^2}{J}$$

Where:

TU = thermal force, k
h = distance from top of footing to top of cap, in
J = rotational stiffness of the entire pile group supporting the footing or footings for the pier, and
J = $E_p I_p / L_p$
E_p = modulus of elasticity of the piles, ksi
I_p = moment of inertia of the entire pile group supporting the footing or footings, in^4
L_p = effective pile length, in. For friction piles, such as wood or steel piles not driven to bedrock, use 50% of the actual length. For end bearing piles, such as steel piles driven to bedrock, use 75% of the actual length.

Applicability of the different flexibilities, as well as friction forces, is summarized in Table 6.6.2.12.3-2.

Table 6.6.2.12.3-2 Thermal force flexibilities and friction forces for PPCB, CWPG, and RSB superstructures

Pier Bearing Type	Foundation Type	Flexibility for Thermal Force (TU)			Friction Force (FR)
		Bearing Pad Shear	Column Bending	Footing Rotation	
Fixed	Spread footing on rock		Δ_2		
Fixed	Footing on piles		Δ_2	Δ_3	
Expansion, elastomeric	Spread footing on rock	Δ_1	Δ_2		FR_E (1)
Expansion, elastomeric	Footing on piles	Δ_1	Δ_2	Δ_3	FR_E (1)
Expansion, sliding plate	Footing on piles or spread footing on rock				FR_B (2)
Expansion, rocker	Footing on piles or spread footing on rock				FR_R (2)

Table notes:

(1) Steel reinforced elastomeric bearings shall be designed not to slip [BDM 5.7.4.2.1]. The friction force will not control analysis of the pier.
(2) These friction forces for sliding plate and rocker bearings are defined in a subsequent article [BDM 6.6.2.18.1].

6.6.2.12.4 Unbalanced forces

Unbalanced thermal forces (TU) will result if there is lack of symmetry in span lengths, bearing properties, pier types, and/or superstructure materials along the length of the bridge. (Unbalanced friction forces (FR), which are similar to unbalanced thermal forces (TU), are illustrated in BDM Figure 6.6.2.18.2.2.) If both thermal (TU) and friction (FR) forces are present the designer shall determine the imbalance considering factored forces.

Bureau policy is to apply some reasonable thermal or friction force to a pier in all cases, even if symmetry would indicate that the force is zero. Guidelines for the thermal force (TU) are given in the following two subarticles, and guidelines for the friction force are given in a subsequent article [BDM 6.6.2.18.2.2].

6.6.2.12.4.1 Bridges with integral abutments

For bridges with integral abutments and piers with fixed or elastomeric expansion bearings, consider thermal forces caused by all of the following rules that are applicable, and select the largest force for each pier:

(a) Thermal force if expansion occurs from a pier with fixed bearings or a central location among piers with fixed bearings
(b) Thermal force based on the force experienced by an adjacent pier
(c) Unbalanced thermal forces considering all expansion bearings in the structure
(d) Special forces for two-span bridges

Table 6.6.2.12.4.1 lists the Bureau policies for typical two- to four-span integral abutment bridges that do not have large variations in pier stiffness. To determine the thermal forces at the piers for a support configuration not listed in the table or for bridges with more than four spans, the designer shall apply rules (a) through (d) and consider any large variations in pier stiffness.

Table 6.6.2.12.4.1. Thermal forces for piers in bridges with integral abutments, fixed bearings, and elastomeric expansion bearings

No. of Spans	Support Configuration(1), Pier Bearing Type	Rule(s): Use the maximum of the forces listed for the number of spans, support configuration, and bearing type.(2)
2	Fixed, I-**F**-I	(d): Larger of the following: thermal force based on 25% of longer adjacent span length or 5% of larger passive soil resistance at an abutment(3)
2	Expansion, I-**E**-I(4)	(d): Thermal force based on shear deflection of the expansion bearings for 25% of the longer adjacent span length(5)
3	Fixed, I-**F**-**F**-I	(a): Thermal force based on 50% of center span length
3	Fixed, I-E-**F**-I	(b): Thermal force based on shear deflection of the expansion bearings on the adjacent pier. (Expansion length for calculating thermal force shall be the center span length.)(5)
3	Expansion, I-**E**-F-I	(a): Thermal force based on shear deflection of the expansion bearings on the pier. (Expansion length for calculating thermal force shall be the center span length.)(5)
4	Fixed, I-E-**F**-E-I	(b): Thermal force based on shear deflection of the expansion bearings adjacent to the longer interior span length. (Expansion

No. of Spans	Support Configuration(1), Pier Bearing Type	Rule(s): Use the maximum of the forces listed for the number of spans, support configuration, and bearing type.(2)
		length for calculating thermal force shall be the longer interior span length.)(5) (6)
4	Expansion, I-**E**-F-**E**-I	(a): Thermal force based on shear deflection of the expansion bearings on the pier. (Expansion length for calculating thermal force shall be the adjacent interior span length.)(5)
4	Fixed, I-F-**F**-F-I	(b): Thermal force based on longer adjacent interior span length
4	Fixed, I-**F**-F-**F**-I	(a): Thermal force based on adjacent interior span length

Table notes:

(1) I indicates an integral abutment, E indicates a pier with steel reinforced elastomeric expansion bearings, F indicates a pier with fixed bearings or a keyed-in diaphragm, and an underline indicates the pier for which the thermal forces apply.
(2) Steel reinforced elastomeric bearings shall be designed not to slip [BDM 5.7.4.2.1].
(3) For this two-span condition, consider the passive soil resistance to be a thermal force (TU). Use typical berm soil properties to determine the passive pressure [BDM 5.6.1.1.2]. For more than two spans the usual thermal forces will provide sufficient design values, and the passive pressure force need not be considered in typical structures.
(4) Bureau policy is to provide at least one fixed pier per bridge. This bearing arrangement violates the policy and must be approved by the supervising Unit Leader.
(5) Consider flexibilities of bearings, pier column(s), and pier footing(s) as applicable.
(6) Rule (c) also applies but obviously will result in a much smaller force in this case.

6.6.2.12.4.2 Bridges with stub abutments

For bridges with stub abutments and piers with fixed or elastomeric expansion bearings, consider thermal forces caused by all of the following rules that are applicable, and select the largest force for each pier:

(a) Thermal force if expansion occurs from a pier with fixed bearings or a central location among piers with fixed bearings
(b) Thermal force based on the force experienced by an adjacent pier
(c) Unbalanced thermal force considering all expansion bearings in the structure
(d) Special forces for two-span bridges

Table 6.6.2.12.4.2 lists the Bureau policies for typical two- to four-span stub abutment bridges that do not have large variations in pier stiffness. To determine the thermal forces at the piers for a support configuration not listed in the table or for bridges with more than four spans, the designer shall apply rules (a) through (d) and consider any large variations in pier stiffness.

Table 6.6.2.12.4.2. Thermal forces for piers in bridges with stub abutments, fixed bearings, and elastomeric expansion bearings

No. of Spans	Support Configuration(1), Pier Bearing Type	Rule(s): Use the maximum of the forces listed for the number of spans, support configuration, and bearing type.(2)
2	Fixed, E-**F**-E	(c): Unbalanced thermal force based on shear deflection of all expansion bearings in the structure or (d): Thermal force based on 50% of longer adjacent span length or 50% of equal adjacent span lengths
3	Fixed, E-**F**-**F**-E	(a): Thermal force based on 50% of center span length

3	Fixed, E-E-**F**-E	(b): Thermal force based on shear deflection of expansion bearings on the adjacent pier. (Expansion length for calculating thermal force shall be the center span length.)(3) or (c): Unbalanced thermal force based on shear deflection of all expansion bearings in the structure
3	Expansion, E-**E**-F-E	(a): Thermal force based on shear deflection of expansion bearings on the pier. (Expansion length for calculating thermal force shall be the center span length.)(3)
4	Fixed, E-E-**F**-E-E	(b): Thermal force based on shear deflection of the expansion bearings on the pier adjacent to the longer interior span length. (Expansion length for calculating thermal force shall be the longer interior span length.)(3) or (c): Unbalanced thermal force based on shear deflection of all expansion bearings in the structure
4	Expansion, E-**E**-F-**E**-E	(a): Thermal force based on shear deflection of the expansion bearings on the pier. (Expansion length for calculating thermal force shall be the adjacent interior span length.)(3)
4	Fixed, E-F-**F**-F-E	(b): Thermal force based on the longer adjacent interior span length
4	Fixed, E-**F**-F-**F**-E	(a): Thermal force based on adjacent interior span length

Table notes:

(1) E indicates a stub abutment or a pier with steel reinforced elastomeric expansion bearings, F indicates a pier with fixed bearings or a keyed-in diaphragm, and an underline indicates the pier for which the thermal forces apply.
(2) Steel reinforced elastomeric bearings shall be designed not to slip [BDM 5.7.4.2.1].
(3) Consider flexibilities of bearings, pier column(s), and pier footing(s) as applicable.

6.6.2.12.5 Skewed pier forces

For skewed piers, longitudinal movement of the superstructure causes thermal forces (TU) both perpendicular to the pier (out-of-plane) and parallel with the pier (in-plane). With hand computations forces applied to a skewed pier are determined from perpendicular and parallel components of the longitudinal movement, as illustrated in Figure 6.6.2.12.5.

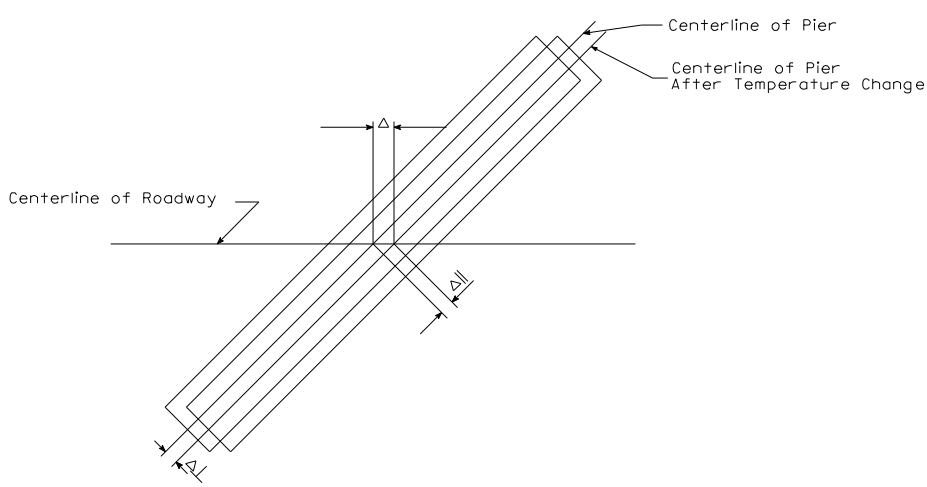

Figure 6.6.2.12.5. Perpendicular and parallel components of superstructure movement

The perpendicular movement determines the out-of-plane thermal force as outlined in [BDM 6.6.2.12.3]. The parallel movement is used in a similar way, except that for frame piers the column bending flexibility is replaced by the frame flexibility.

6.6.2.12.6 In-plane forces

Frame (pedestal) piers shall be designed for in-plane thermal forces within frame members. Thermal coefficient and temperature rise and fall (without setting factor) shall be taken from the design temperature change article [BDM Table 6.6.2.12.2].

6.6.2.13 Temperature gradient

[AASHTO-LRFD C3.12.3]

For typical CCS, PPCB, CWPG, and RSB bridges the designer need not consider temperature gradient (TG) [AASHTO-LRFD C3.12.3].

6.6.2.14 Shrinkage

[AASHTO-LRFD 3.4.1]

Concrete frame (pedestal) piers of usual and special configuration shall be designed for in-plane shrinkage forces within frame members (SH). For normal weight concrete the shrinkage coefficient shall be 0.0002 and shall be applied with the gross moments of inertia of frame members. Beyond this 28-day amount, shrinkage need not be considered for typical piers because creep will partially mitigate long-term shrinkage effects.

Under normal construction practice, shrinkage along the length of Iowa standard pretensioned prestressed concrete beams (PPCB) is small because most of the shrinkage takes place before the beams are placed in a bridge. Although shrinkage of the deck shall not be neglected for determining width of expansion joints, shrinkage of the deck may be neglected for pier design because the shrinkage will take place slowly and can be accommodated by creep. However, the designer should be alert to unusual situations when significant longitudinal shrinkage in beams or decks will take place after beam placement.

6.6.2.15 Creep

For typical new bridges the designer need not consider longitudinal effects of creep (CR).

6.6.2.16 Locked-in force

Locked-in force effects (EL) generally are not a concern for typical new bridges. However, on widening and staged construction projects the designer shall consider locked-in effects for differential creep and shrinkage between old and new members.

6.6.2.17 Settlement

For typical bridges supported on friction and/or end bearing piles designed with the geotechnical resistance charts [BDM 6.2.7] or supported on spread footings on rock, the designer need not consider loads caused by settlement (SE) unless advised to do so by the Soils Design Unit.

6.6.2.18 Friction

Longitudinal forces caused by bronze sliding plate, Teflon (PTFE) sliding plate, and rocker bearings shall be considered friction forces (FR).

6.6.2.18.1 Out-of-plane forces

Although the Bureau no longer specifies sliding plate bearings for ordinary new construction, sliding lubricated bronze plate bearings may be used on widening and rehabilitation projects and where steel

reinforced elastomeric bearings cannot be used. For details see the standard sheet [BSB SS 4541]. The friction force for sliding bearings is computed as follows.

$FR_B = \mu\ (DC1 + DC2 + DW)$

Where:

FR_B = friction force for a sliding bronze plate bearing, k
μ = coefficient of friction between sliding parts in the bearing. For a lubricated bronze plate bearing, take μ as 0.10.
DC1 = Noncomposite dead load of structural components [BDM 6.6.1.4]
DC2 = Composite dead load of structural components [BDM 6.6.1.4]
DW = Dead load of wearing surface and utilities [BDM 6.6.1.4]

Although the Bureau no longer specifies rocker bearings for new construction, rockers may be used on widening and rehabilitation projects and where steel reinforced elastomeric bearings cannot be used. The friction force for a rocker is computed as follows.

$FR_R = 0.25*P*(r/R)$

Where:

FR_R = friction force for a rocker bearing, k, indicated as T in Figure 6.6.2.18.1
P = dead load of the superstructure, including DC1, DC2, and DW, k
r = radius of the rocker pin, in
R = radius of the rocker, in

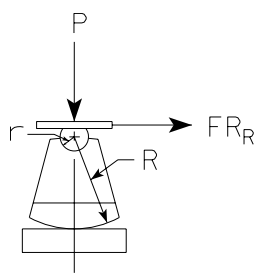

Figure 6.6.2.18.1. Rocker bearing details

6.6.2.18.2 Unbalanced forces

Unbalanced friction forces (FR) will result if there is lack of symmetry in loading and bearing properties along the length of the bridge, as illustrated in Figure 6.6.2.18.2.2.

Bureau policy is to apply some reasonable friction or thermal force to a pier in all cases, even if symmetry would indicate that the force is zero. Guidelines are given below.

6.6.2.18.2.1 Bridges with integral abutments

Reserved

6.6.2.18.2.2 Bridges with stub abutments

For bridges with stub abutments and piers with fixed or friction-acting expansion bearings, compare factored friction (FR) and factored thermal forces (TU) caused by all of the following rules that are applicable, and select the largest force for each pier:

(a) Thermal force if expansion occurs from a pier with fixed bearings or a central location among piers with fixed bearings
(b) Thermal force based on the force experienced by an adjacent pier

(c) Unbalanced friction force considering friction forces for all expansion bearings in the structure (as in Figure 6.6.2.18.2.2)
(d) Special forces for two-span bridges

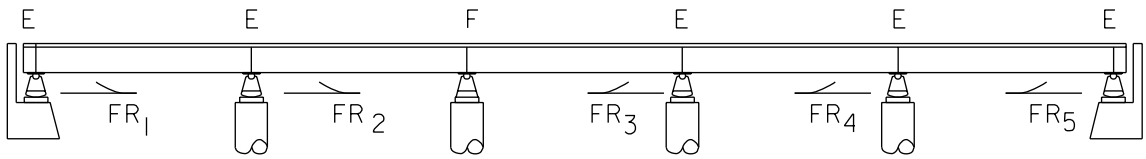

$$Unbalanced\ Friction\ Force\ =\ (FR_1 + FR_2) - (FR_3 + FR_4 + FR_5)$$

Figure 6.6.2.18.2.2. Unbalanced friction force at the fixed pier resulting from forces at friction-acting expansion bearings

Table 6.6.2.18.2.2 lists the Bureau policies for typical two- to four-span stub abutment bridges that do not have large variations in pier stiffness. To determine the friction and thermal forces at the piers for a support configuration not listed in the table or for bridges with more than four spans, the designer shall apply rules (a) through (d) and consider any large variations in pier stiffness.

Table 6.6.2.18.2.2. Friction and thermal forces for piers in bridges with stub abutments, fixed bearings, and friction-acting expansion bearings

No. of Spans	Support Configuration(1), Pier Bearing Type	Rule(s): Use the maximum of the forces listed for the number of spans, support configuration, and bearing type.
2	Fixed, R-**F**-R	(c): Unbalanced friction force based on friction forces for all expansion bearings in the structure (2) or (d): Thermal force based on 50% of longer adjacent span length or 50% of equal adjacent span lengths (2)
3	Fixed, R-**F**-**F**-R	(a): Thermal force based on 50% of center span length
3	Fixed, R-R-**F**-R	(b): Friction force for expansion bearings on pier adjacent to center span or (c): Unbalanced friction force based on friction forces for all expansion bearings in the structure
3	Expansion, R-**R**-F-R	(a): Friction force for expansion bearings on the pier
4	Fixed, R-R-**F**-R-R	(b): Larger friction force for expansion bearings on either pier adjacent to the center pier or (c): Unbalanced friction force based on friction forces for all expansion bearings in the structure
4	Expansion, R-**R**-F-**R**-R	(a): Friction force for expansion bearings on the pier
4	Fixed, R-F-**F**-F-R	(b): Thermal force based on the longer adjacent interior span length
4	Fixed, R-**F**-F-**F**-R	(a): Thermal force based on adjacent interior span length

Table notes:

(1) R indicates a stub abutment or a pier with rockers or other friction-acting expansion bearings, F indicates a pier with fixed bearings or a keyed-in diaphragm, and an underline indicates the pier for which the friction or thermal forces apply.
(2) The load factor for these two forces will not be the same. When comparing forces to determine the larger, apply the appropriate load factors. For a skewed pier, compare the factored forces parallel with and perpendicular to the pier cap.

6.6.2.18.3 Skewed pier forces

For expansion piers utilizing bronze sliding plates or steel rockers, the longitudinal friction force (FR) simply is resolved into perpendicular and parallel force components to be applied to the pier.

If the thermal force (TU) controls, apply components of the thermal movement as for a bridge without friction-acting bearings [BDM 6.6.2.12.5].

6.6.2.19 Vessel collision

The vessel collision load, CV, need not be applied to piers in typical Iowa streams. For piers in navigable waterways the designer shall consult with the supervising Unit Leader.

6.6.3 Load application to structure

6.6.3.1 Load modifier

[AASHTO-LRFD 1.3.2, 3.4.1]

Load factors shall be adjusted by the load modifier, which accounts for ductility, redundancy, and operational importance [AASHTO-LRFD 1.3.2, 3.4.1]. For typical bridges the load modifier shall be taken as 1.0.

6.6.3.2 Limit states

[AASHTO-LRFD 3.4.1, 3.4.2]

For a typical pier, the designer shall consider the following load combinations, as applicable [AASHTO-LRFD 3.4.1].

- Strength I, superstructure with vehicles but without wind
- Strength III, superstructure with design 3-second gust wind speed at 115 mph
- Strength IV, superstructure with high dead to live load ratio
- Strength V, superstructure with vehicles and with design 3-second gust wind speed at 80 mph
- Extreme Event II, superstructure with reduced vehicles and vehicular collision, ice, or hydraulic events
- Service I, superstructure with vehicles and with design 3-second gust wind speed at 70 mph

The Strength IV load combination generally will not be critical except in very large structures or during construction stages. Fatigue need not be investigated for typical reinforced concrete piers or pile bents.

The Service I load combination is intended for deflection, settlement, crack control, and other service-related design. It is not intended for strength design of components of a pier or pier foundations.

Except for unusual situations, such as eccentric loads during staged construction, the designer need not investigate construction load combinations [AASHTO-LRFD 3.4.2].

6.6.3.3 Longitudinal and transverse forces transmitted through bearings

All of the loads applied to the superstructure are transmitted to piers through bearings, bearing guides, anchor bolts, and full-depth keyed-in diaphragms. In addition to vertical loads, the bearings and keyed-in diaphragms transmit BR, $WS_{superstructure\ l}$, WL_l, TU, and FR longitudinal loads and CE, $WS_{superstructure\ t}$, and WL_t transverse loads. How much longitudinal load is transmitted depends on the bearing type--friction-acting bearing, elastomeric bearing, fixed bearing, or keyed-in diaphragm.

6.6.3.3.1 Elastomeric bearings

For the instantaneous loads BR, $WS_{superstructure\ l}$, and WL_l the Bureau assumes that a steel reinforced elastomeric expansion bearing will fully transmit the loads without significant shear deformation or slip.

The Bureau assumes that the bearing can transmit longitudinal forces for its pier's average span length but cannot transmit additional longitudinal forces from other bearings.

For load combinations at the strength or service limit state the thermal load, TU, develops based on shear deformation in the bearing for the amount of longitudinal thermal movement in the superstructure. The bearing shall be designed with sufficient friction anchorage or other restraint to prevent slip [BDM 5.7.4.2.1]. Therefore, the bearing will transmit to the pier a thermal force based on the shear deflection in the bearing.

Although a steel-reinforced elastomeric bearing usually is assumed to fully transmit all superstructure transverse forces, the designer should investigate the transverse capacity of the bearing and its anchorage for large transverse loads and other unusual situations.

6.6.3.3.2 Fixed bearings and keyed-in concrete diaphragms

A fixed bearing or keyed-in concrete diaphragm connection is intended to fully transmit all thermal and non-thermal longitudinal and transverse forces from the superstructure to the pier. The fixed bearing or keyed-in diaphragm will transmit longitudinal forces from its pier's average span length plus any additional longitudinal forces that cannot be transmitted by friction-acting bearings.

6.6.3.3.3 Friction-acting bearings

A friction-acting bearing, such as a rocker or sliding bronze plate, cannot transmit more longitudinal force than the friction force that causes the bearing to move. Any amount of force above the friction force therefore must be distributed to fixed bearings in the bridge. In any strength or service limit state load combination, thermal movement of the superstructure will cause a friction-acting bearing to reach the friction force and, therefore, all non-thermal longitudinal forces in those load combinations must be distributed to fixed bearings in the bridge.

For the extreme event limit state, friction loads are included, but temperature loads are not. The designer should assume that some movement has activated friction forces and analyze the structure accordingly.

Although a friction-acting bearing usually is assumed to fully transmit all transverse forces to the pier, the designer should investigate the transverse capacity of the bearing and its anchorage for large transverse loads and other unusual situations.

6.6.3.4 Longitudinal and transverse forces for non-skewed piers

[AASHTO-LRFD 3.8.2]

Longitudinal forces transmitted from the superstructure shall be applied to non-skewed piers based on the type and capacity of bearings as follows.

- **Pier with elastomeric expansion bearings:** Determine the thermal shear force considering the rules for bridges with integral or stub abutments [BDM 6.6.2.12.4.1, 6.6.2.12.4.2], and apply the shear force to the pier. Also apply the non-thermal longitudinal force to the pier.
- **Pier with fixed bearing or keyed-in diaphragm:** Determine the thermal shear force considering the rules for bridges with integral or stub abutments [BDM 6.6.2.12.4.1, 6.6.2.12.4.2, 6.6.2.18.2.2], and apply the shear force to the pier. Also apply the non-thermal longitudinal force to the pier plus any force distributions from piers with friction-acting bearings.
- **Pier with friction-acting expansion bearings:** Because any longitudinal thermal movement of the superstructure will cause the friction force in the bearing, apply the friction force to the pier. Distribute the entire non-frictional longitudinal force equally to other piers with fixed bearings or keyed-in diaphragms.

Applicable longitudinal forces $WS_{substructure\ l}$, WA_l, and IC_l applied directly to a pier shall be determined according to the load articles [BDM 6.6.2.8.2, 6.6.2.7, and 6.6.2.9].

Transverse wind forces from the superstructure, $WS_{superstructure\ t}$ and WL_t, shall be determined for the average span length of the pier. Applicable transverse forces $WS_{substructure\ t}$, WA_t, and IC_t applied directly to a pier shall be determined according to the load articles [BDM 6.6.2.8.2, 6.6.2.7, and 6.6.2.9].

Transverse and longitudinal forces shall be applied to a pier at the elevations given in Table 6.6.3.4. Transverse forces applied above the bridge seat cause overturning moments usually transmitted through varying upward and downward forces on bearings across the pier cap. Longitudinal forces applied above the bearings usually do not transmit moments through bearings and therefore those forces are moved downward to the bridge seat for purposes of pier design.

Table 6.6.3.4. Elevations for application of transverse and longitudinal forces

Force(1)	**Elevation for Force Parallel with Pier Cap (Transverse to Bridge)**	**Elevation for Force Perpendicular to Pier Cap (Longitudinal with Bridge)**
BR	N/A	Bridge seat or elevation of transfer element in a fixed bearing(2)
CE	6 feet above roadway	N/A
CT	4 feet above ground	4 feet above ground
FR	N/A	Elevation of sliding surface or rocker pin or elevation of transfer element in a fixed bearing(2)
IC	Average of high and low water elevations	Average of high and low water elevations
TU	N/A	Bridge seat or elevation of transfer element in a fixed bearing(2)
WA	Center of gravity of pier area exposed to stream flow	Center of gravity of pier area exposed to stream flow
WL	6 feet above roadway	Bridge seat or elevation of transfer element in a fixed bearing(2)
WS Substructure	Center of gravity of pier area exposed to wind	Center of gravity of pier area exposed to wind
WS(3) Superstructure	Center of gravity of superstructure area exposed to wind	Bridge seat or elevation of transfer element in a fixed bearing(2)

Table notes:

(1) See the abbreviations and notations article [BDM 6.6.1.4].
(2) For a pier with expansion bearings or a keyed-in diaphragm, use the elevation of the bridge seat. For a low profile fixed bearing use the elevation of the contact surface of the curved sole plate. For a fixed shoe bearing use 12 inches above the bridge seat, the approximate elevation of the bearing pin.
(3) There also is a vertical load on the superstructure [AASHTO-LRFD 3.8.2]. See Figure 6.6.3.4.

Forces in strength or service limit states that would be applied to a non-skewed, fixed pier with a full-depth keyed-in diaphragm are shown in Figure 6.6.3.4. In the transverse direction, the CE, WS_t, and WL_t loads are applied at different elevations above the bridge seat because the full-depth diaphragm over the width of the bridge will transmit moments to the pier. In the longitudinal direction, however, the rotation of the full-depth diaphragm at the bridge seat prevents any transmission of moments, and the forces are applied at the bridge seat.

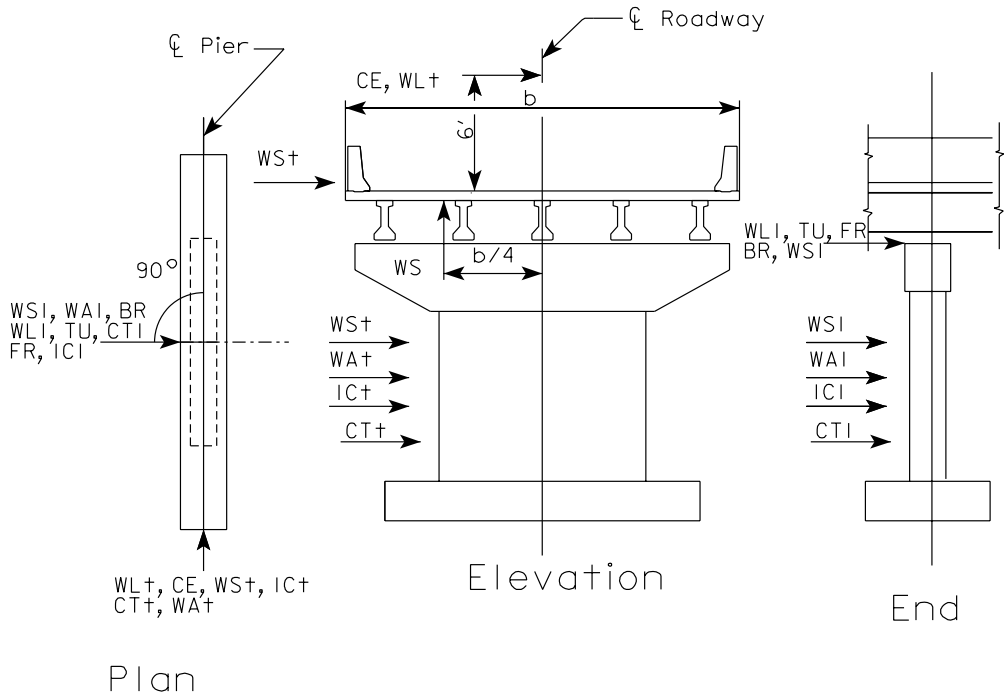

Figure notes:

- See the AASHTO LRFD Specifications for limit states and load factors. Not all forces will be applied in each limit state.
- Refer to Table 6.6.3.4 for more information on elevations of lateral forces.

Figure 6.6.3.4. Elevations for application of transverse and longitudinal forces

6.6.3.5 Parallel and perpendicular forces for skewed piers

[AASHTO-LRFD 3.8.2]

For a skewed pier, longitudinal and transverse forces transmitted from the superstructure shall be determined according to the article above [BDM 6.6.3.4]. The direction of longitudinal forces shall be arranged with transverse forces from the superstructure and forces applied directly to the pier ($WS_{substructure}$, WA, and IC) so as to produce maximum resultants parallel with and perpendicular to the pier cap. Each of the two resultants will require a separate load case. Figure 6.6.3.5-1 shows the force directions for a load case that produces the maximum resultant perpendicular to a skewed pier. Reversing the transverse forces would produce the maximum resultant parallel with the pier. Note however that CE and some WA and IC forces will have single directions and should not be reversed.

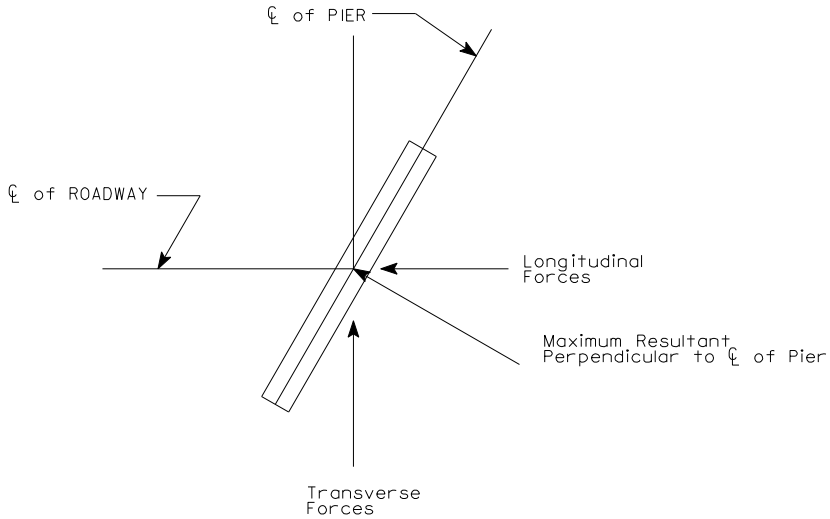

Figure 6.6.3.5-1. Force arrangement for maximum resultant perpendicular to skewed pier

In determining the specific forces to be applied to the pier the designer will need to take the longitudinal and transverse forces for each applicable horizontal superstructure load (BR, CE, $WS_{superstructure}$, WL, TU, and FR) in turn and compute parallel and perpendicular components with respect to the pier. Also, if the pier is not aligned with stream flow the designer will need to compute parallel and perpendicular components for WA and IC.

The components shall be applied at the elevations given in Table 6.6.3.5. Transverse components applied above the bridge seat cause overturning moments usually transmitted through varying downward and upward loads on bearings across the pier cap. Longitudinal components applied above the bearings usually do not transmit moments through bearings and therefore those forces are moved downward to the bridge seat for purposes of pier design.

Table 6.6.3.5. Elevations for application of parallel and perpendicular components

Force(1)	Elevation for Force Parallel with Pier Cap	Elevation for Force Perpendicular to Pier Cap
BR	6 feet above roadway	Bridge seat or elevation of transfer element in a fixed bearing(2)
CE	6 feet above roadway	Bridge seat or elevation of transfer element in a fixed bearing(2)
CT	4 feet above ground	4 feet above ground
FR	Elevation of sliding surface or rocker pin or elevation of transfer element in a fixed bearing(2)	Elevation of sliding surface or rocker pin or elevation of transfer element in a fixed bearing(2)
IC	Average of high and low water elevations	Average of high and low water elevations
TU	Bridge seat or elevation of transfer element in a fixed bearing(2)	Bridge seat or elevation of transfer element in a fixed bearing(2)
WA	Center of gravity of water pressure on the pier area exposed to stream flow	Center of gravity of water pressure on the pier area exposed to stream flow
WL	6 feet above roadway	Bridge seat or elevation of transfer element in a fixed bearing(2)
WS Substructure	Center of gravity of pier area exposed to wind	Center of gravity of pier area exposed to wind
WS(3) Superstructure	Center of gravity of superstructure area exposed to wind	Bridge seat or elevation of transfer element in a fixed bearing(2)

Table notes:

(1) See the abbreviations and notations article [BDM 6.6.1.4].
(2) For a pier with expansion bearings or a keyed-in diaphragm, use the elevation of the bridge seat. For a low profile fixed bearing use the elevation of the contact surface of the curved sole plate. For a fixed shoe bearing use 12 inches above bridge seat, the approximate elevation of the bearing pin.
(3) There also is a vertical load on the superstructure [AASHTO-LRFD 3.8.2]. See Figure 6.6.3.5-2.

Forces in a strength limit state that would be applied to a skewed, fixed pier with a full-depth keyed-in diaphragm are shown in Figure 6.6.3.5-2.

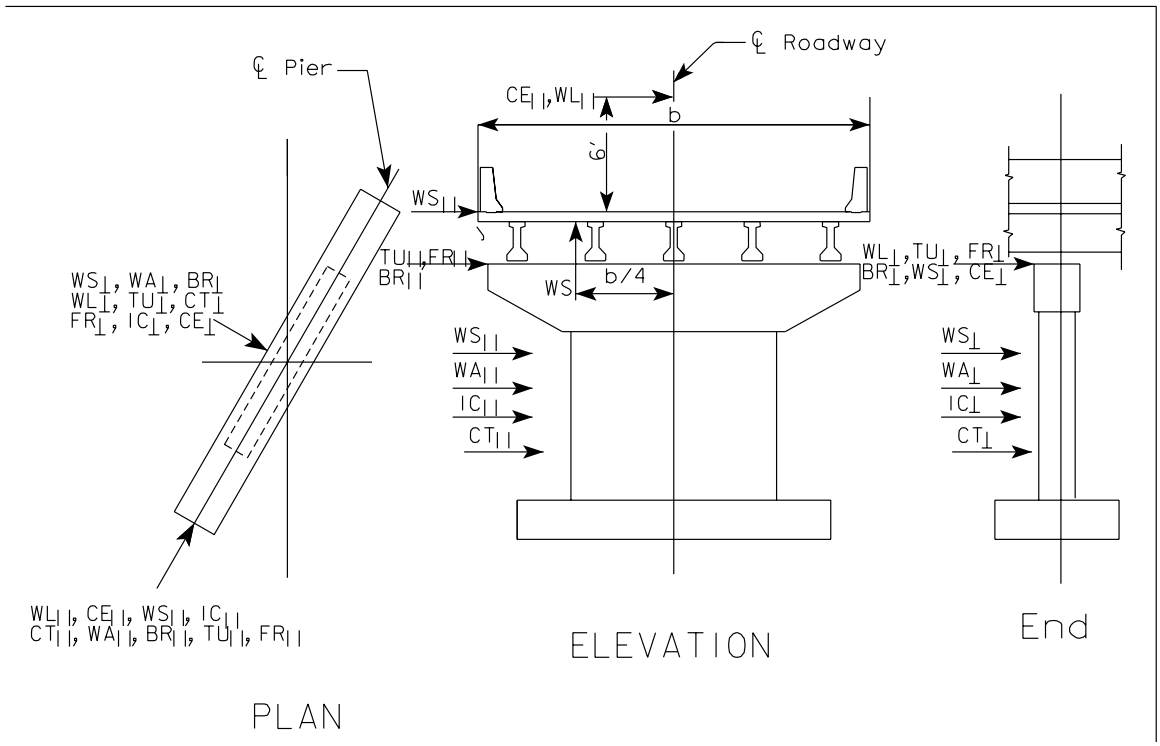

Figure notes:

- See the AASHTO LRFD Specifications for limit states and load factors. Not all forces will be applied in each limit state.
- $BR_{\parallel}$ is to be applied 6 feet above the deck (not as shown).
- Refer to Table 6.6.3.5 for more information on elevations of lateral forces.

Figure 6.6.3.5-2. Elevations for application of parallel and perpendicular components

6.6.4 Pier components and details

6.6.4.1 Frame piers and T-piers

Generally frame piers and T-piers have similar components. Each pier type typically has a cap with cantilever ends, one or more supporting columns, and a footing under each column. In most cases each footing is supported on piles, but footings also may be placed directly on rock or on drilled shafts. Frame piers will differ from T-piers when supported on drilled shafts; columns will be extensions of the drilled shafts. Also, if a frame pier, designed for the vehicular collision force (CT), needs a crash strut then it will typically be detailed as shown in Figure 6.6.4.1.

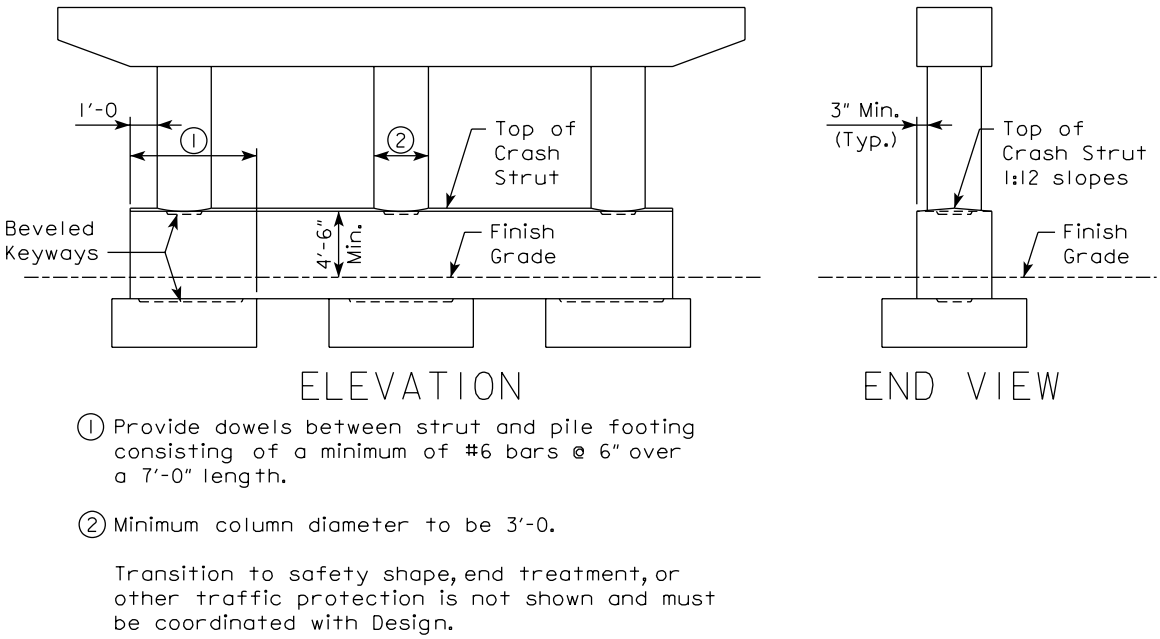

Figure 6.6.4.1. Frame pier with crash strut

The designer should model a pier with gross section properties for all components. In cases where a column is supported by a single drilled shaft the modeling will need to account for the stiffness of the shaft.

For modeling typical pier cap and column structures on footings, the designer should assume fixity at tops of footings. For footing analysis and design the designer should create a second structural model, conservatively assuming the pier columns extend to bottoms of footings. If a column moment is magnified more than 25% at the column bottom, the column magnification factor shall be applied to the moment on the footing.

Superstructure loads that cause overturning effects may be distributed solely through the exterior beams or girders with equal and opposite vertical forces.

For design conditions for which the pier cap depth or footing depth becomes excessive, the designer may specify an increased concrete strength of 5 ksi at 28 days for all components of a pier. The increased strength requires the approval of the supervising Unit Leader and confirmation of the availability of 5 ksi concrete from the appropriate District Materials Engineer. The 5 ksi strength requirement shall be noted on the project plans in the following locations:

- Structural concrete bid item on the project general notes and quantities sheet,
- General notes on the project general notes and quantities sheet, and
- Pier notes on the pier details sheet.

For pier components where epoxy coated reinforcing is required, the designer shall specify the epoxy coating and shall not substitute a corrosion inhibitor. Although the use of corrosion inhibitor was permitted in the past, it may have undesirable effects on aggregates and other admixtures and, therefore, the option no longer is acceptable.

In the articles that follow for pier cap, pier column, and pier footing, the analysis and design article gives guidelines for component choices and dimensions, for design method, and for shear and moment. The detailing article gives requirements related to drawing conventions, step dimensions, reinforcing, and finish treatment.

6.6.4.1.1 Pier cap

6.6.4.1.1.1 Analysis and design

[AASHTO-LRFD 5.5.1.2.1, 5.7.3.2, 5.7.3.4.1, 5.7.3.5, 5.7.3.6, 5.9.2.3.1b, 5.10.6, C5.10.8.1.2a, C5.10.8.1.2b]

The load and resistance factor design method shall be used for design of pier caps. The AASHTO LRFD Bridge Design Specifications in Chapter 5: Concrete Structures requires D-regions (disturbed or discontinuity) [AASHTO-LRFD 5.5.1.2.1] to be designed using the strut-and-tie method (STM) for the strength and extreme event limit states. Historically, the Iowa DOT has used sectional models, which is a B-region method, in some areas which are classified as D-regions (e.g. typical pier caps). Iowa will continue designing based on its current historical practices until it completes a review of the AASHTO requirements. The preferred sectional shear design method is the Simplified Procedure for Nonprestressed Sections (Method 1) [AASHTO-LRFD 5.7.3.4.1]. Other sectional shear design procedures may be considered at sections where they produce a more conservative result.

With the sectional method the designer shall provide additional longitudinal reinforcement as required for shear [AASHTO-LRFD 5.7.3.5]. This requirement for additional longitudinal reinforcement substitutes for other reinforcement checks at end supports, points of inflection, and cutoffs in tension zones in the AASHTO Standard Specifications [AASHTO-LRFD C5.10.8.1.2a, C5.10.8.1.2b]. Typical T-pier and frame pier caps will not need the additional longitudinal reinforcement for two reasons: Bureau policy to carry the maximum longitudinal reinforcement through the entire cap without cutoff and the exception below.

The exception to the requirement for additional longitudinal reinforcement for shear applies “where the reaction force or the load introduces direct compression into the flexural compression face of the member.” The exception applies for direct loading [AASHTO LRFD Figure C5.7.3.5-2] and direct supports not at simple beam ends. For a T-pier cap the exception applies at the support ends of the cantilevers, and for a frame pier cap the exception applies at exterior columns with cantilevers, at interior columns, and at beam bearings at which there is maximum moment (shear changes sign). At these locations the designer need only provide the area of longitudinal reinforcement required for moment. However, the designer is cautioned to be aware of unusual cap designs that warrant additional longitudinal reinforcement at other locations along the pier cap.

Overall dimensions of the cap shall be selected to provide adequate space for beam bearings and anchor bolts, to provide structural capacity, to provide reinforcing anchorage, and to provide for construction operations.

Pier cap heights should be limited to fit the overall dimensions of the substructure components. As a general rule, cap heights for T-piers should be limited to 6.0 to 7.5 feet, and cap heights for frame piers should be limited to 3.5 to 5.5 feet.

The cap shall extend horizontally beyond the centerline of the exterior beam a minimum of 2 feet increased by the secant (1/cosine) of the pier skew angle, as indicated in Figure 6.6.4.1.1.1-1. The extension also shall be sufficient to provide at least a 6-bar-diameter length beyond the bearing area of the exterior beam and to provide length for development of top reinforcing steel from the effective face of the column. The overall cap length should be given to the next larger 6-inch increment.

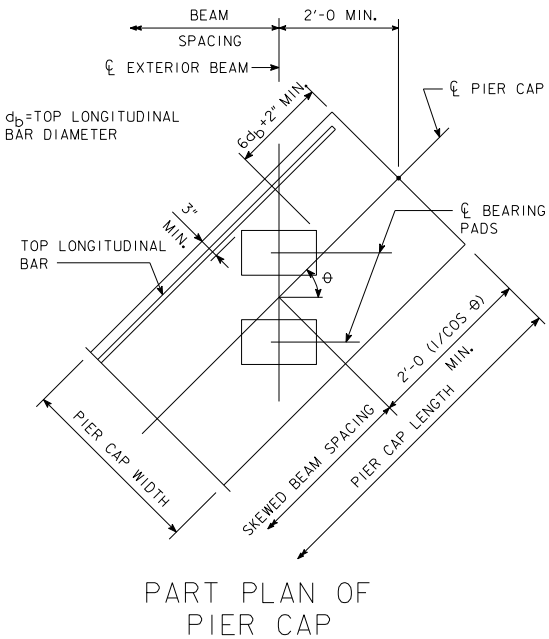

Figure 6.6.4.1.1.1-1. Plan of skewed pier cap end

The cap width shall provide at least 3 inches from each bearing area to the nearest cap edge and at least 6 inches from the center of each anchor bolt to the nearest edge. Bureau policy is to have at least one fixed pier in the bridge [BDM 6.6.2.7.1], but if there is no fixed pier in the bridge, the clearance to the cap edge shall be increased by 1 to 2 inches to provide for resetting of bearings.

To aid in avoiding interference between cap and column steel, the cap width should be at least 3 inches greater than the thickness of the supporting columns.

For aesthetic reasons in frame piers the preferred maximum cap depth is the bridge beam depth. Minimum cap depth shall be determined for structural capacity in moment and shear, and the depth should be increased only as necessary for construction and aesthetic considerations.

Pier cap dimensions for the largest dead load, live load, and dynamic load allowance should be used for all piers in a bridge, unless the loads vary significantly from pier to pier.

The critical section for pier cap cantilever moment shall account for shape of the column as indicated in Figure 6.6.4.1.1.1-2. Although the figure shows the column for a T-pier, the same rules apply to the columns in a frame pier.

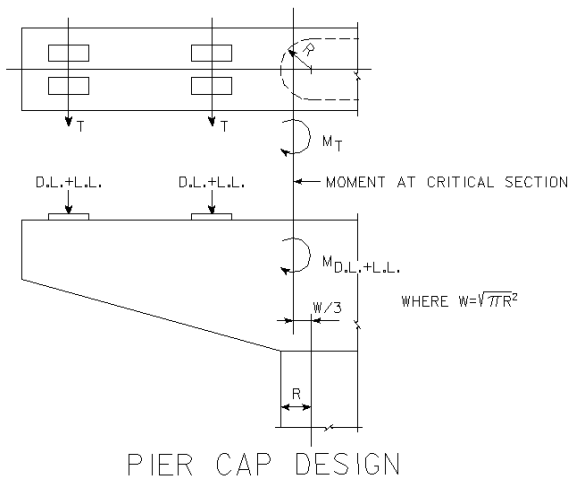

Figure 6.6.4.1.1.1-2. Critical section for pier cap cantilever moment

For T-piers that do not have a keyed-in diaphragm, thermal forces applied through bearings will cause a cantilever moment in the horizontal plane (M_T in Figure 6.6.4.1.1.1-2). The thermal moment in the horizontal plane shall be applied along with moments in the vertical plane.

When using the sectional design model for shear, the designer shall select the critical section using the guidelines in the AASHTO LRFD Specifications [AASHTO-LRFD 5.7.3.2].

Typical frame and T-pier caps are not subjected to significant amounts of torsion, and for typical caps the designer need not design for torsion. For non-typical situations, such as piers located under superstructure expansion joints between unbalanced spans, the designer shall check torsion and shall provide reinforcement for both torsion and shear as required [AASHTO-LRFD 5.7.3.6].

The preferred maximum pier cap stirrup size is #5, with a minimum spacing of 6 inches for double stirrups. For frame piers, to limit the cap depth, the designer may decrease stirrup spacing to 4 inches for short distances, up to 2 feet.

For longer span PPCB bridges with high shear in a pier cap the designer should consider the following options to minimize cap depth and yet provide adequate shear capacity.

- Increase stirrup bar size from #5 to #6.
- Consider additional single hooked bar stirrups, but not triple stirrups.
- For T-piers, consider widening the column to eliminate the interior beam reaction on the cantilever.
- Consider widening the cap.
- Consider higher strength concrete.

To control temperature and shrinkage cracking the Bureau requires a maximum stirrup spacing of 12 inches [AASHTO-LRFD 5.10.6]. At locations where only minimum reinforcement is required, such as in a T-pier cap above the column, the designer may use single loop stirrups to provide reinforcement at each face of the pier cap.

If the pier cap length needs to extend beyond the edge of the bridge deck in order to develop the cantilever reinforcing, the designer should hook the cantilever bars to limit the length of the cantilever. In general, however, the Bureau prefers not to hook the cantilever bars.

Many factors such as mix design, mix placement temperatures, mix geometry, ambient conditions, and curing methods can affect the thermal behavior of concrete. Based on the Bureau's long-standing experience with mass concrete using typical mixes, materials, and construction practices in Iowa, the

designer shall apply IDOT Developmental Specifications for Mass Concrete – Control of Heat of Hydration, when the least dimension of any element exceeds 4.5 feet. The designer also shall consult with the supervising Unit Leader or the Bridge Project Development Engineer regarding mass concrete notes to be placed on the plans for controlling and monitoring concrete mix temperatures.

Regardless of cap thickness the designer shall provide shrinkage and temperature reinforcement as required by the AASHTO LRFD Specifications [AASHTO-LRFD 5.10.6].

Early removal of pier cap formwork allows the contractor to reuse the same forms on multiple piers in a reduced time frame. As such, Bureau policy requires designers to check if the pier cap formwork for typical frame and T-piers can be removed when the concrete strength of the pier cap reaches 2.50 ksi. At a minimum, the load applied to the pier shall include pier self-weight (DC). Frame piers shall also include load combinations involving in-plane temperature (TU) and shrinkage (SH) forces. Wind on the substructure (WS) shall be included when considered significant. Water (WA), ice (IC), vehicle collision (CT) and other load types generally need not be considered. Other external loads, such as superstructure beam load, are not applied to the pier until the pier concrete reaches its full 28 day strength [IDOT SS 2403.03, N, 2]. At a minimum, the Strength I and Service I limit states shall be investigated for early formwork removal according to the following load combinations:

- Strength I: γ_p*DC + 1.0*TU + 1.0*SH with γ_p = 1.75 or 0.9
  At a minimum check the following:
  - Flexural capacity and/or combined axial tension and flexural capacity
  - Shear capacity
- Service I: γ_p*DC + 1.0*TU + 1.0*SH with γ_p = 1.25 or 1.0
  At a minimum check the following:
  - Crack control for Class 1 exposure
  - Tensile stress on gross concrete section less than $f_r = 0.24*(f'c)^{0.5}$ according to AASHTO-LRFD 5.9.2.3.1b and commentary for areas with bonded reinforcement.

Particularly for frame piers, designers shall base the pier analysis on the gross moment of inertia and the different elastic moduli of the concrete members. Note that TU and SH loads generate axial forces in the frame pier cap in addition to moments and shears. In general, designers shall not modify the pier design to accommodate early formwork removal. CADD Notes E735A and E735B shall be included on the pier sheets, as needed, in plan sets involving frame and T-piers.

6.6.4.1.1.2 Detailing

[AASHTO-LRFD 5.10.3]

Chamfer strips of ¾ inches are required for edges of typical pier caps [IDOT SS 2403.03, B, 5, f].

On drawings, show pier caps looking up-station. Give step elevations to the nearest hundredth of a foot, and use these elevations to determine step dimensions. See Figure 6.6.4.1.1.2-1 for the typical step and dimension conventions. In cases where elevations and step dimensions do not fit conveniently on the pier cap drawing, place them in a table.

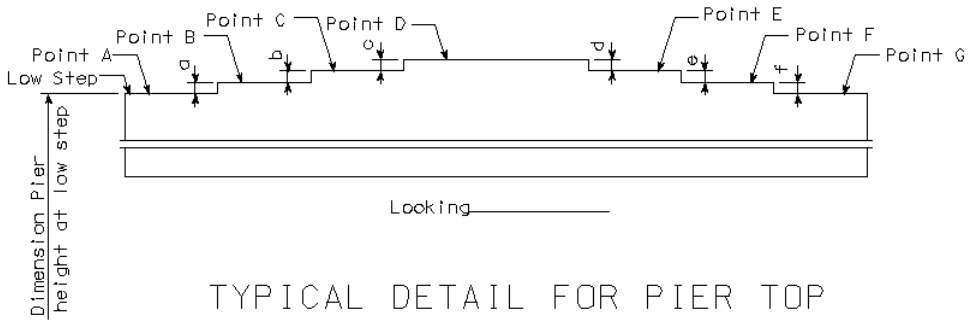

Figure note:
Identify pier top.

Figure 6.6.4.1.1.2-1. Pier cap step elevations

If the difference in bearing seat elevations, Point A to Point G, is greater than 1.5 feet the designer should consider sloping the bottom of the pier cap.

If the step elevation for the next beam bearing is greater than 1¾ inches, additional step reinforcing shall be provided as shown in Figure 6.6.4.1.1.2-2.

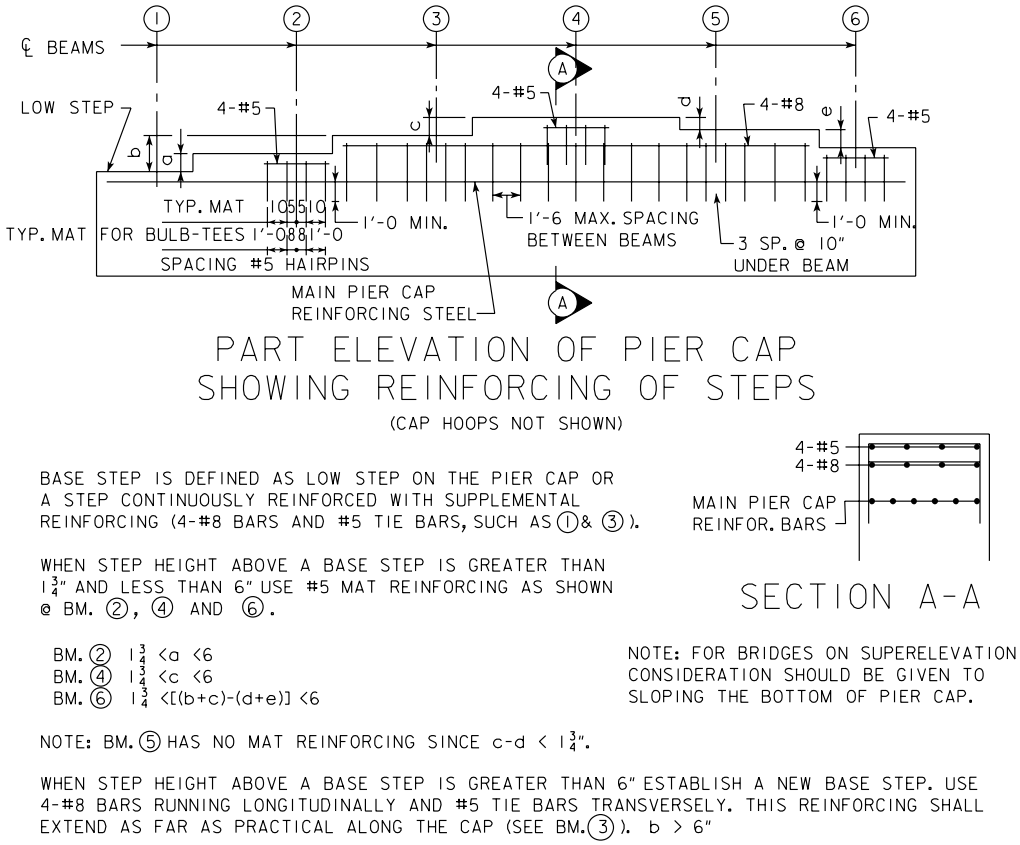

Figure 6.6.4.1.1.2-2. Step reinforcing for pier caps

Pier cap step locations from beam centerlines are illustrated for fixed piers and expansion piers in Figure 6.6.4.1.1.2-3. Pier cap steps for expansion piers are located midway between beam lines in order to ensure pier diaphragms will not conflict with the step.

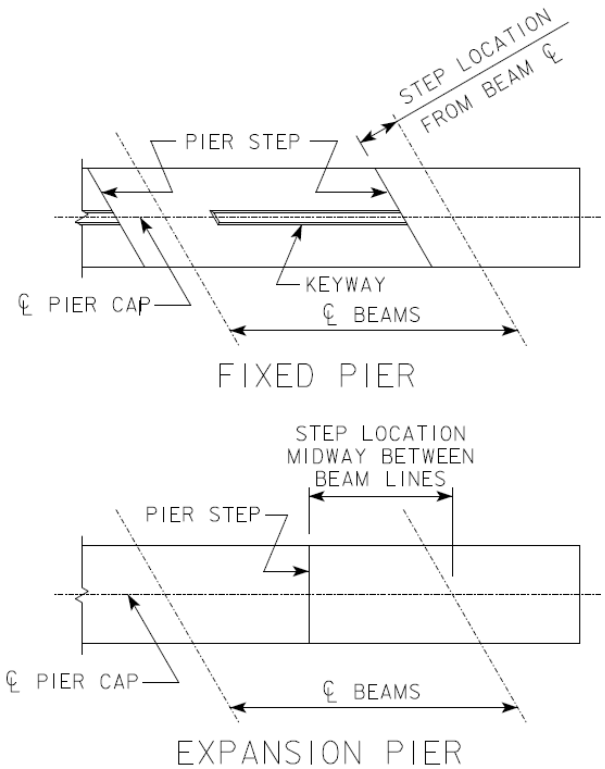

Figure 6.6.4.1.1.2-3. Pier cap step locations

The top of an aesthetic cap often is not stepped, and changes in elevation of bearings are achieved with pedestals. The following are guidelines for reinforcing typical pier pedestals.

- Minimum pedestal height at low step shall be 4 inches.
- For pedestals from 4 inches to less than 10 inches in height, use 5m1 and 5n1 bars. See Figure 6.6.4.1.1.2-4.
- For pedestals from 10 inches to less than 18 inches in height, provide a single tie along with the 5m1 and 5n1 bars. See Figure 6.6.4.1.1.2-4.
- For pedestals from 18 inches to 24 inches in height, provide two ties along with the 5m1 and 5n1 bars. See Figure 6.6.4.1.1.2-4.
- Maximum pedestal height shall be 24 inches without special approval from the supervising Unit Leader.
- A horizontal construction joint and keyway are required between the pier cap and pedestal.
- Minimum bearing edge distance should meet the same guidelines as for pier caps [BDM Figure 6.6.4.1.1.1-1].
- The preferred set back from the pier cap vertical face is 4 inches with a minimum set back of 2 inches.
- If possible the pedestals shall be square, but rectangular shapes may be required for skewed piers.
- The vertical pedestal bars shall be embedded into the cap a minimum of 12 inches past the main cap reinforcing steel and shall be tied and in place prior to the cap concrete placement.

- For fixed bearings the anchor bolts should extend into the cap concrete a minimum of 12 inches for 1¼ inch diameter anchor bolts and 15 inches for 1½ inch diameter anchor bolts.
- For expansion bearings, the anchor bolts do not need to extend into the pier cap and may end in the pedestal concrete; however if guides are used to prevent lateral movement of beams or girders, the anchor bolts for the guides shall meet the same embedment requirements as for fixed bearings in the bullet above.

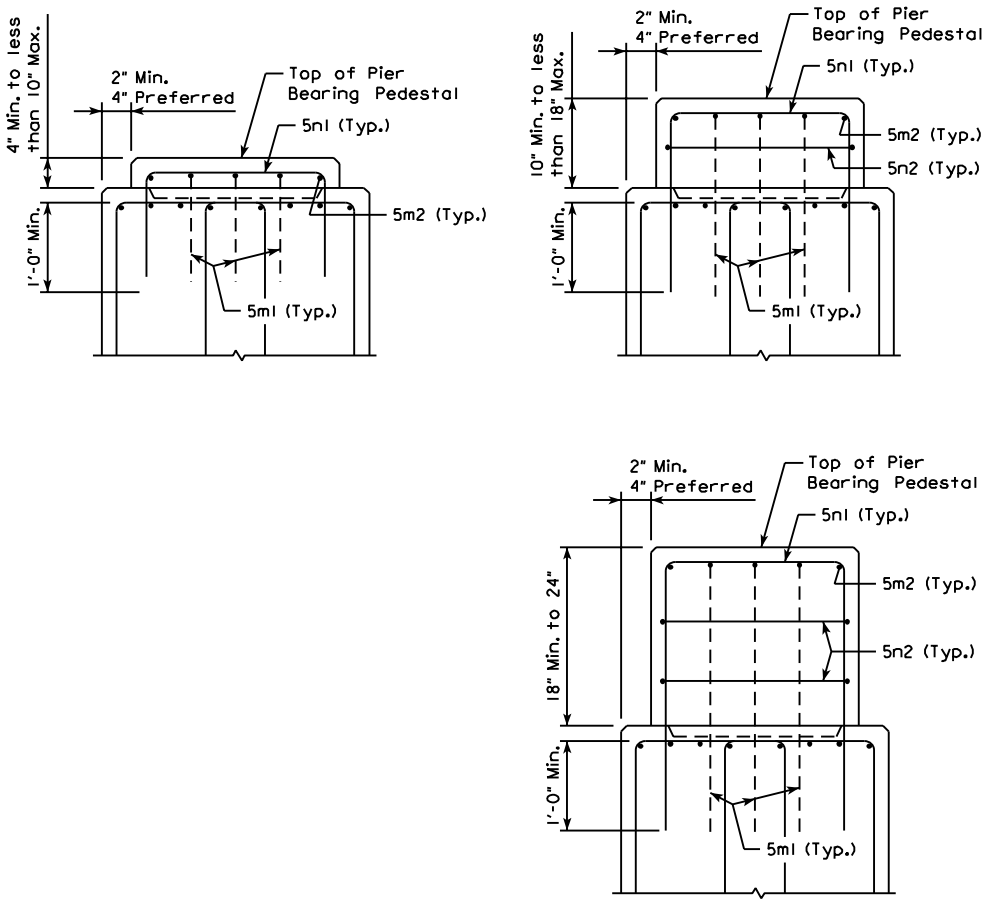

Figure 6.6.4.1.1.2-4. Pier pedestal elevation views for three height ranges

For longitudinal reinforcing bars in pier caps, the preferred minimum clear spacing is 2½ inches, between unspliced or spliced bars, but the spacing shall be not less than required by the AASHTO LRFD Specifications [AASHTO-LRFD 5.10.3]. For the usual concrete placement by tremie, provide a 5-inch clear space between center bars of top layers of reinforcing, as shown in Figure 6.6.4.1.1.2-5.

If it is necessary to splice longitudinal bars, allow for the lap splice when determining bar spacing. Consider horizontal and vertical lap splices to achieve the best bar arrangement.

Because of limited space on staged construction projects there may not be adequate length for lap splices of pier cap reinforcement. In cases where lap splices cannot be used the designer shall use coil tie assemblies or mechanical splice assemblies and note the special requirement on the plans.

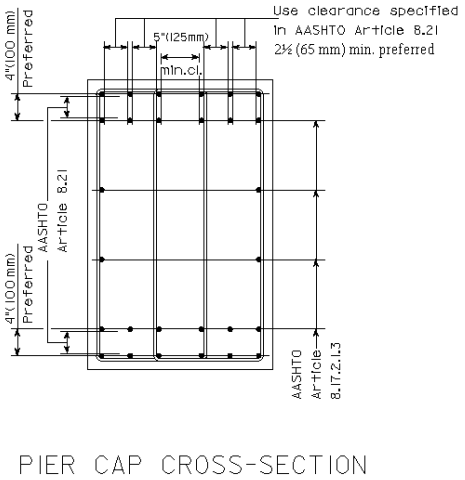

Figure note:

The top bar clearance note should read: Use clearance specified in AASHTO LRFD Article 5.10.3.

Figure 6.6.4.1.1.2-5. Pier cap reinforcing

For stirrup anchorage a longitudinal bar shall be placed in each corner of a pier cap. The Bureau prefers that reinforcing bars placed for moment be placed full length in the cap, without cutoffs. To avoid splices the designer may specify bar lengths to 60 feet.

For detailing pier reinforcing on plans, label the reinforcing in alphabetical order from top to bottom as given in Table 6.6.4.1.1.2.

Table 6.6.4.1.1.2. Pier reinforcing steel designation

Location	Designation
Cap, top and sides	a
Cap, bottom	b
Cap, shear	c
Column, vertical and dowels	d
Column, ties	e
Footing, top	f
Footing, bottom	g
Cap, beam bearing	m & n

If an expansion joint is located above a pier cap, the pier cap concrete shall be sealed to reduce deicer damage, and pier cap reinforcing shall be epoxy coated. The additional requirements shall be noted on the plans.

6.6.4.1.2 Pier column

6.6.4.1.2.1 Analysis and design

[AASHTO-LRFD 4.6.2.5, 5.6.4.2, 5.6.4.3, 5.10.6]

Pier columns shall be designed by the load and resistance factor design method.

For analyzing a typical pier and for designing the cap and columns the designer may use a structural model in which the columns are fixed at the tops of the footings. With this model the designer may choose to include pile flexibility.

For frame piers the preferred round column diameters are 30 inches, 36 inches, 42 inches, and 48 inches. Column spacing should be a minimum of 16 feet, and the designer should attempt to use only three columns for 40 to 44-foot wide bridges. Column lengths should be equal, unless more than 3 feet of additional depth of excavation is required between the shallowest and deepest footing. If excessive excavation may be required the designer shall discuss the situation with the supervising Unit Leader.

For T-piers the preferred column shape is rectangular with rounded ends. Columns for T-piers shall be at least 30 inches thick to allow access for workers during construction. Columns with rounded ends should have thicknesses the same as typical round column diameters.

For frame pier columns the designer shall provide the minimum reinforcing required by the AASHTO LRFD Specifications [AASHTO-LRFD Equation 5.6.4.2-3], without reduction in column cross section.

For T-pier columns in Seismic Zone 1 the designer may reduce reinforcing based on an effective cross section [AASHTO-LRFD 5.6.4.2]. The effective cross section area shall be a minimum of 50% of the actual cross section area, and the reinforcement shall be the larger of 1% of the effective cross section or the amount from Equation 5.6.4.2-3 for the effective cross section. Both the effective cross section and the actual cross section must be capable of resisting all LRFD load combinations.

For typical bridges the designer should consider pier columns to be unbraced. Thus the effective length factor, K, will be 2.1 for T-pier columns about each axis, 2.1 for frame pier columns about the axis parallel with the cap, and 1.2 for frame pier columns about the axis perpendicular to the cap [AASHTO-LRFD 4.6.2.5]. When determining column heights for typical bridge piers the designer should assume columns fixed at tops of footings.

To avoid the requirement for a second-order (P-delta) analysis the designer needs to limit the maximum slenderness ratio, $K\ell_u/r$, to 100 [AASHTO-LRFD 5.6.4.3]. However, often when the slenderness ratio exceeds 70 the moment magnifier becomes large enough that a second-order analysis is advisable. To reduce slenderness, secondary effects, and special analysis the designer should discuss the following options with the supervising Unit Leader.

(1) Increase the column width.
(2) Substitute a single round column for the pier column(s).
(3) Use a combination of a thicker pier wall and larger columns on top of the wall.

In cases where a column has a large lateral load, such as the temperature and shrinkage force in a wide pier, the designer shall check column shear, shear transfer at the top and bottom of the column, and lateral capacity of the foundation. The column will need to have sufficient transverse reinforcement to meet both shear stirrup requirements and column tie requirements. In most cases the designer should consider the need for stirrups in the column first and then add ties if stirrups are too widely spaced. If the transverse reinforcement varies over the column height the designer should not use a continuously wound tie (spiral).

Many factors such as mix design, mix placement temperatures, mix geometry, ambient conditions, and curing methods can affect the thermal behavior of concrete. Based on the Bureau's long-standing experience with mass concrete using typical mixes, materials, and construction practices in Iowa, the designer shall apply IDOT Developmental Specifications for Mass Concrete – Control of Heat of Hydration, when the least dimension of any element exceeds 4.5 feet. The designer also shall consult with the supervising Unit Leader or the Bridge Project Development Engineer regarding mass concrete notes to be placed on the plans for controlling and monitoring concrete mix temperatures.

Regardless of column thickness the designer shall provide shrinkage and temperature reinforcement as required by the AASHTO LRFD Specifications [AASHTO-LRFD 5.10.6].

6.6.4.1.2.2 Detailing

[AASHTO-LRFD 5.10.8.2.2a, 5.10.8.2.2b]

If piers are located in either of the following locations, pier column reinforcement shall be epoxy coated:

- Under an expansion joint or
- Within 25 feet of the edge of the traveled roadway, regardless of roadway type or traffic speed.

Use of corrosion inhibitor in pier columns is not permissible.

When detailing horizontal construction joints such as the joint between column and footing, the designer shall assume the ends of vertical bars rest on the construction joint and determine the bar lengths accordingly.

In most cases the keyway dimensions given on plans should be based on the nominal size of a piece of dimension lumber. If it is necessary to specify an actual size for a keyway, the plan dimensions shall be noted as actual size.

The Bureau prefers that frame pier columns be designed as tied columns but detailed with spirals that have turns spaced at 12 inches and an alternate to substitute ties at 12 inches. Spirals and ties shall be #4 or larger. An extra 1½ turns of the spiral shall be used at the top and bottom. At a spiral splice location, the splice length shall be the Class B splice length required for the bar size, minimum cover, top bar condition, and coating condition given in Table 6.6.4.1.2.2. To hold the spiral in position, four angles, L 7/8 x 7/8 x 1/8 shall be provided at equal spacing around the column.

Under bent bar details, the tie alternate to the spiral shall be given. The tie size shall match the spiral bar size. The tie lap shall be the Class B splice length required for the bar size, minimum cover, top bar condition, and coating condition given in Table 6.6.4.1.2.2.

Table 6.6.4.1.2.2. Splice length for column spirals and ties

Spiral or Tie Bar Size	Minimum Concrete Cover Inches	Uncoated Bar Splice Length, Inches	Epoxy-coated Bar Splice Length, Inches
#4	1.5	25	30
#5	1.875 (1)	32	38

Table note:

(1) The larger than usually required cover is necessary to reduce splice lengths shown in the table.

The tie lap shall be rotated 90 degrees from one tie to the next as indicated in Figure 6.6.4.1.2.2-1.

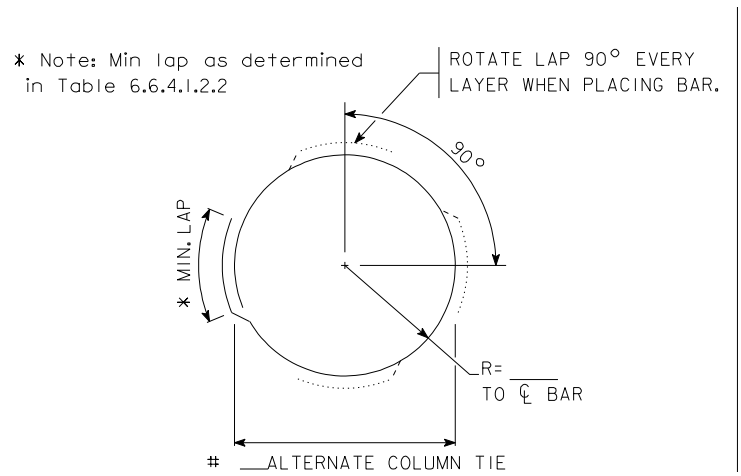

Figure 6.6.4.1.2.2-1. Alternate column tie detail

The end portions of T-pier columns shall be reinforced as shown in Figure 6.6.4.1.2.2-2.

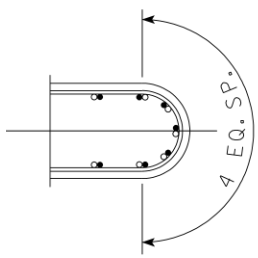

Figure 6.6.4.1.2.2-2. End reinforcing for T-pier columns

In frame piers, the designer may have difficulty achieving sufficient tension development length in the pier cap for large closely spaced epoxy-coated bars extended from the column. In that case the preferred option is to use a reduced development length based on the fraction of area of steel required at the column-pier cap joint divided by the area of steel provided [AASHTO-LRFD 5.10.8.2.2b]. At the reduced development length, the column bars should terminate 2 inches below the main reinforcing in the top of the pier cap, and the bars shall meet the AASHTO-required compression development length without reduction [AASHTO-LRFD 5.10.8.2.2a].

The designer should consider the usual construction process of pre-tying the cap steel and placing this cage as a unit. Any hooked column bars that conflict with the pre-tied cage will disrupt placing of the cage and possibly disrupt placement of concrete in the column by tremie. If hooks are required, a minimum opening of 12 inches shall be provided in the center of the column for a tremie, and the designer should consider 180-degree hooks to increase the opening size. However, the designer should try the reduced development length alternative described above before attempting to use hooked column bars.

6.6.4.1.3 Pier footing

6.6.4.1.3.1 Analysis and design

[AASHTO-LRFD 2.6.4.4.2, 5.6.7, 5.8.2.1, 5.7.3.4, 5.10.6, 5.10.8.2.1, 5.12.8.6.3, 6.9.3, 10.5.5.2.1, 10.5.5.3.2]

Pier footings shall be designed by the load and resistance factor method. For typical footings the designer need not use the strut and tie method [AASHTO-LRFD 5.8.2.1].

For analyzing a typical pier foundation and for designing footing and piles the designer may use a structural model in which the pier columns are fixed at the bottom of the footing; however, temperature loads should be based on column fixity at the top of the footing. With this model the designer may choose to include pile flexibility.

The bottom elevation of all footings subject to potential frost heave shall be a minimum of 4 feet below ground line.

The bottom elevation of a T-pier footing placed in a stream, river, or lake shall be set at a minimum of 6 feet below the channel elevation.

Typical footing thickness is 3.5 to 4 feet. Many factors such as mix design, mix placement temperatures, mix geometry, ambient conditions, and curing methods can affect the thermal behavior of concrete. Based on the Bureau's long-standing experience with mass concrete using typical mixes, materials, and construction practices in Iowa, the designer shall apply IDOT Developmental Specifications for Mass Concrete – Control of Heat of Hydration, when the least dimension of any element exceeds 4.5 feet. The designer also shall consult with the supervising Unit Leader or Bridge Project Development Engineer regarding mass concrete notes to be placed on the plans for controlling and monitoring concrete mix temperatures.

If the footing thickness needs to be greater than 4.5 feet, the designer shall provide shrinkage and temperature reinforcement for mass concrete on sides and top of the footing [AASHTO-LRFD 5.10.6].

Significant cost savings can be achieved by reusing steel formwork without needing to resize/rebuild the formwork. Plan dimensions for pile footing foundations, within a frame pier or among multiple bridge piers, should have the same plan dimensions if each dimension, based on design requirements, is 18 inches or less than the largest footing dimension. Footing thickness may vary since reuse of steel forms is not dependent on footing thickness. Per BDM 6.2.4.1, the designer should attempt to use the minimum number of piles required for each individual footing since replication of pile layout is not economical. Spread footings on rock should have the same plan dimensions if each dimension is 6 inches or less than the largest footing dimension.

Piles subject to scour shall be designed and checked for stability. The Preliminary Bridge Design Unit or Preliminary Design Consultant will provide two scour elevations, design and check, in the hydraulic data on the type, size, and location (TS&L) plan. The analysis that will be required for the two scour conditions is as follows. Note that dynamic load allowance should not be included in the factored loads for the scour checks [BDM 6.2.2.1].

- Pile geotechnical resistance (bearing) at design scour: The designer shall check the factored compression or tension load on a pile at the strength limit state against the factored geotechnical resistance, neglecting any load from the soil scoured away and neglecting all pile friction bearing resistance above the design scour elevation [AASHTO-LRFD 2.6.4.4.2, 10.5.5.2.1]. Nominal unit geotechnical resistances shall be taken from the geotechnical resistance charts [BDM Table 6.2.7-1 and Table 6.2.7-2], and the resistance factor, φ, for compression or tension shall be taken from the appropriate table [BDM Table 6.2.9-1 and Table 6.2.9-2].

- Pile geotechnical resistance (bearing) at check scour: The designer shall check the factored load ($\gamma = 1.0$) on a pile at the extreme event limit state against the factored geotechnical resistance, neglecting any load from the soil scoured away and neglecting all friction bearing resistance above the check scour elevation [AASHTO-LRFD 2.6.4.4.2, 10.5.5.3.2]. Nominal unit geotechnical resistances shall be taken from the geotechnical resistance charts [BDM Table 6.2.7-1 and Table 6.2.7-2], and the resistance factor, φ, shall be taken as 1.00 for compression. For tension resistance the resistance factor, φ, shall be taken as 0.80.

- Pile structural resistance at design and check scour: The designer shall check the maximum slenderness ratio of an H-pile in compression for design scour and for check scour against the

values in Table 6.6.4.1.3.1-1. The pile length shall be taken as the distance along the pile from an assumed hinge at the bottom of footing to an assumed inflection point 4 feet below the scour elevation. The effective length factor, K, may be taken as 1.0.

Structural Resistance Level 4 is not included in the tables below and requires the designer to perform an in-depth structural analysis and design.

Table 6.6.4.1.3.1-1. Maximum slenderness ratios for axially loaded, Grade 50 H-piles at design scour and check scour

Scour condition	Structural Resistance Level	Maximum slenderness ratio, KL/r [1]
Design	1 or 2	80
Design	3	48
Check	1 or 2	120
Check	3	120

Table note:

(1) Both the HP 12x53 and HP 14x73 shapes are slender-element sections, meaning that flanges will buckle locally before the member buckles. The slender-element condition for the 14-inch shape has been considered to reduce the maximum slenderness values in the table.

If the slenderness limits in the table above are applied to the available groups of H-piles, the maximum unsupported lengths are as shown in Table 6.6.4.1.3.1-2.

Table 6.6.4.1.3.1-2. Maximum unsupported lengths for axially loaded, Grade 50 H-piles (bottom of footing to 4 feet below scour elevation)

Pile group	Unsupported length for pile at Structural Resistance Level – 1 or 2, feet		Unsupported length for pile at Structural Resistance Level – 3, feet	
	Design scour	Check scour	Design scour	Check scour
HP 10	16.0	24.1	9.6	24.1
HP 12	19.0	28.6	11.4	28.6
HP 14	23.2	34.9	13.9	34.9

An example of scour analysis and design for an H-pile is given in LRFD Pile Design Examples ~ 2013.

If the design flood inundates part or the entire superstructure the designer shall check a combined vertical and lateral load condition on pier piles at the extreme event limit state as described in the water loads article [BDM 6.6.2.7].

To laterally stabilize pier footings, perimeter piles should be battered at a 1 horizontal to 4 vertical slope provided that there is no interference with site utilities or existing or new pile footings. The batter may be reduced to 1 to 6 to avoid interference. If piles for an adjacent interior column and exterior column footing will interfere at 1 to 6, it is preferable to batter the piles for the exterior footing. Corner piles should be battered in the direction of the bisector of adjacent footing edges. The battered pile pattern for each frame pier column footing or for a T-pier footing should be symmetrical.

For pier footings with reinforcing placed directly above H-pile, pipe pile, or timber pile heads, plans shall include a note requiring that all battered piles be trimmed to a horizontal line to aid in placement of reinforcement. Prestressed concrete piles should not be trimmed.

The pile group supporting a pier footing shall be checked for lateral loading. Each vertical pile may be assumed to have shear resistance, and each battered pile may be assumed to have shear resistance

plus the horizontal component of the axial resistance. See the pile resistance guidelines for steel H-piles [BDM 6.2.6.1] and for timber piles [BDM 6.2.6.3].

Special consideration regarding the stability of pile foundations is required when there is less than 10 feet of overburden between the bottom of footing and top of bedrock. In these situations, the potential for "fence-post" action is increased due to insufficient lateral pile support from the soil overburden and the potential for minimal pile penetration into the bedrock. This condition is made worse for situations involving scour. The 10-foot overburden limit may be violated under the following conditions:

- The Chief Structural Engineer and Soils Design Unit agree that the bedrock is soft enough to achieve sufficient pile penetration without damaging the piles. They may require the use of pile points.
- Rock coring is used to create a void for the piles which is then filled with concrete. See the commentary for further information on this option.

For design of footings on piles, the loads include axial force from the column, weight of soil above the footing, footing weight, and buoyant effects, if applicable. In addition to axial force there will be a moment about each footing axis. If the column moment is magnified greater than 25% at the column bottom the column magnification factor moment shall be applied to the moment on the footing. The column moments cause variable loads on the piles, and the Bureau uses the pile loads differently but conservatively for each footing design condition.

The designer shall check a pile subject to uplift for adequate anchorage in the footing and adequate friction resistance in the soil. Guidelines for resistances and resistance factors are given for steel H-piles in the pile section of this manual [BDM 6.2.6.1].

Whenever any pile is subject to uplift, top reinforcement is required in the footing. The maximum pile uplift load shall be assumed to be the load for all exterior piles. For each axis the bending moment for design of top reinforcement shall be determined considering only the exterior piles.

Steel in the bottom of a footing is determined with respect to bending at the strength limit state (M_u) about each footing axis. The maximum factored load on any pile (P_u) shall be used as the load on all piles for computing the factored design moment for each axis. If the reinforcement is placed in the usual location above piles, the cracking moment shall be determined for a footing depth of d plus 2 inches. If the reinforcement is placed within 6 inches of the bottom of the footing, the cracking moment shall be determined for the full footing depth.

For checking distribution of reinforcement in the bottom of a footing for crack control the designer shall use the controlling service limit state moment and the Class 1 exposure factor [AASHTO-LRFD 5.6.7]. If the reinforcement is placed in the usual location above piles, the concrete cover thickness, d_c, measured from the extreme tension fiber to the center of the flexural reinforcement shall be taken as 2 inches for checking distribution of reinforcement. If the reinforcement is placed within 6 inches of the bottom of the footing, d_c shall be determined based on actual location.

The tension development increase factor for top bars [AASHTO-LRFD 5.10.8.2.1b] shall be used for bottom reinforcing whenever there is more than 12 inches of concrete placed below the reinforcing. The designer may use hooks if necessary to provide the necessary tension development, but preferred options are smaller bars or additional reinforcing [AASHTO-LRFD 5.10.8.2.1c].

Typically, the bottom reinforcing mat should be placed 1 inch clear above the tops of piles. Placing the bottom reinforcing mat below the tops of the piles, at 6 inches clear from the bottom of the footing, is an acceptable option only if piles are widely spaced at 5 feet or more in the footing and soil conditions are such that piles are unlikely to be misplaced.

For punching shear design, the pile load shall be taken as P_u/N (where P_u is the maximum total factored axial load on the footing at the strength limit state and N is the number of piles). The shear resistance shall be determined from the AASHTO LRFD Specifications [AASHTO-LRFD 5.12.8.6.3].

For beam shear design with the sectional design model, the pile load shall be taken as the factored axial resistance of a pile (φP_n), not the factored axial load (P_u). This policy is deliberately conservative because pile loads beyond the critical section for shear will be larger than average. Ordinarily the designer should determine the concrete shear resistance by the sectional design model Method 1 [AASHTO-LRFD 5.7.3.4.1] where the method is applicable. However, the designer shall use Method 2 [AASHTO-LRFD 5.7.3.4.2] if required and may use Method 2 if it provides a significant advantage in minimizing footing thickness.

In usual rectangular footings with piles centered at least 1.5 feet from all footing edges, corner piles are the only piles that need to be checked individually for punching shear and beam shear. At Structural Resistance Level – 2 (SRL-2) the minimum footing depth for a HP 10x42 pile is 32 inches and for a HP 10x57 pile is 36 inches. The designer shall investigate shear for any different or unusual conditions such as non-rectangular footings, piles designed to SRL-3 and SRL-4, larger piles, or piles spaced closer to edges than 1.5 feet.

6.6.4.1.3.2 Detailing

[AASHTO-LRFD 5.12.8.5]

Reinforcing in the top of a footing for resisting uplift forces shall be uniformly distributed across the footing.

For the reinforcing mat in the bottom of the footing, provide 1-inch clear cover above the piles so that the reinforcement can be placed without conflict with the piles.

Reinforcement in the bottom of a T-pier footing shall be uniformly distributed in each direction. Reinforcement in the bottom of other rectangular pier footings shall be uniformly distributed in the longitudinal direction but distributed according to band width in the short direction [AASHTO-LRFD 5.12.8.5].

When detailing the footing to column dowels, limit the length of reinforcing bar extending above the footing to a maximum of 15 feet. Larger bar extensions cause unnecessary difficulty during construction.

6.6.4.1.4 Seal coat

Bureau policy is to require that pier footings be placed under dry conditions. For most Iowa creeks, streams, and rivers a pier footing can be placed inside a cofferdam with ordinary dewatering equipment.

For large Iowa rivers where the soil at and below the footing excavation is predominantly sand, the bottom of the sheet pile cofferdam may be difficult to seal, or the length of sheet pile required to seal the cofferdam may be too long to be economical. In these situations a concrete seal coat, as illustrated in Figure 6.6.4.1.4, can be used to construct the footing under dry conditions.

A seal coat may also be required on sites where underlying soft rock is porous.

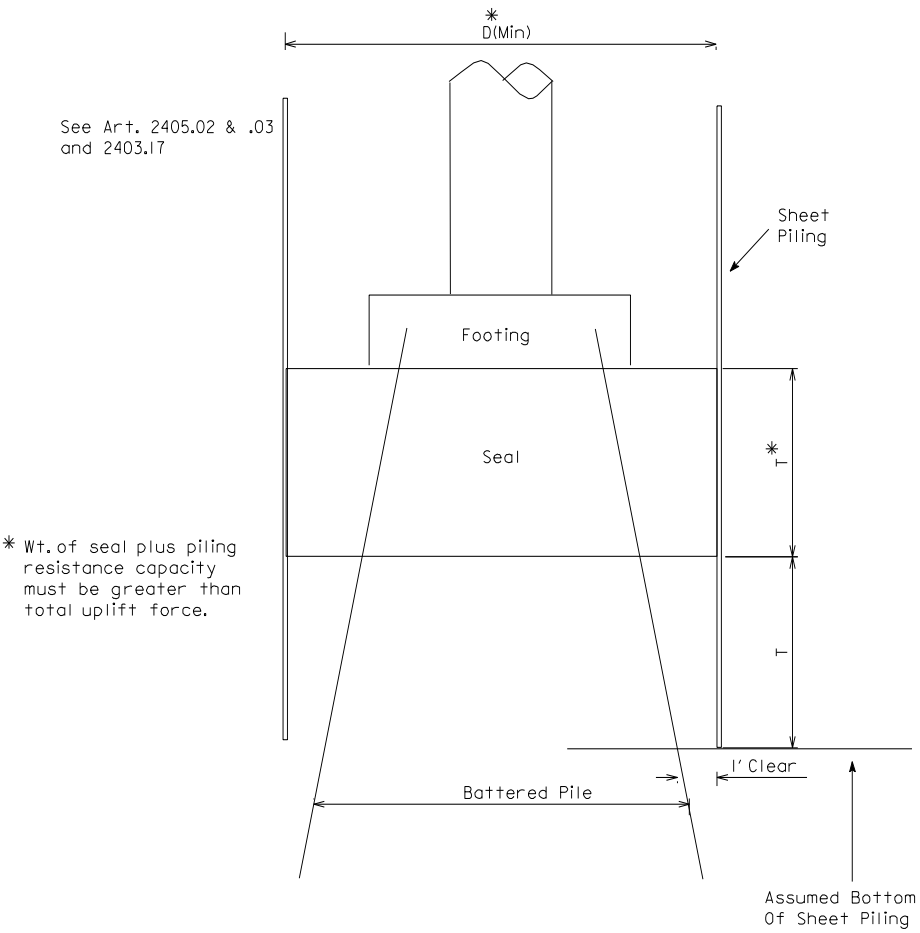

Figure notes:

- In Iowa Department of Transportation *Standard Specifications for Highway and Bridge Construction, Series 2012,* the articles cited in the figure are renumbered 2405.03, A; 2405.03, B; and 2403.03, L.
- Provide at least 3 feet on all sides between the footing and cofferdam.

Figure 6.6.4.1.4. Seal coat inside cofferdam

Because under normal contracting procedures it is difficult to manage projects that may require seal coats, the Bureau has developed a lump-sum “Excavate and Dewater” bid item. Goals of the item are the following:

- To provide a method of bidding that is fair to the contractor,
- To allow the designer to specify the conditions necessary to ensure the structural integrity of the bridge (cofferdam size, elevation, and length), and
- To eliminate as much negotiating as possible to reduce work orders and paperwork required by field personnel to complete the project.

For sites where a cofferdam is required to construct a footing and the permeability of the soil is in question, the designer shall consult with the supervising Unit Leader and the Soils Design Unit before designing a seal coat or using the “Excavate and Dewater” bid item.

Although the bridge designer is required to design a seal coat in order to check structural feasibility and adequacy, during construction the contractor is responsible for all aspects of the design of the cofferdam and seal, including sliding, overturning, bursting, shear, bearing capacity, and settlement.

6.6.4.1.4.1 Analysis and design

The following are guidelines for design of a seal coat.

- The minimum seal coat thickness shall be 3 feet.
- The maximum seal coat thickness for typical river conditions should be 6 feet. The supervising Unit Leader may approve a greater thickness.
- When determining the size of the cofferdam, provide one foot between the edge of the footing piles and the sheet pile cofferdam [BDM Figure 6.6.4.1.4]. Also, provide at least 3 feet on all sides between the footing and cofferdam [IDOT SS 2405.03, A, 4].
- Request 25-year stream flow information (Q_{25}) from the Preliminary Bridge Design Unit. Base the elevation of the top of the cofferdam and the thickness of the seal coat on Q_{25}, unless a smaller flow is approved by the supervising Unit Leader.
- Check the seal coat at the service limit state. Compare the factored hydraulic load with the factored seal coat weight plus the smaller of (1) the factored bond resistance between piles and seal coat or (2) the factored friction resistance between piles and soil.
- Apply a load factor of 1.1 to the hydraulic load.
- Apply a resistance factor of 1.0 to the seal coat weight.
- Apply a resistance factor of 1.0 to the bond resistance computed from a 0.010 ksi nominal bond resistance between pile surface area and seal coat. Do not add resistance for pile batter. Do not consider any bond resistance between seal coat and steel sheet piles.
- Apply a resistance factor of 0.5 to friction resistance between pile and soil [BDM 6.2.7]. Do not add resistance for pile batter.
- At the service limit state, the nominal flexural tension resistance in the seal coat shall be 0.250 ksi. Checks with load and resistance factors of 1.0 should include uplift on the cantilevered seal coat beyond the pile group and any other condition that causes significant flexural stress. The Iowa DOT standard specifications provide safety by requiring a minimum flexural strength of 0.500 ksi in test beams before the cofferdam can be dewatered [IDOT SS 2405.03, B, 2].
- Because of the uncertainty associated with the seal coat, the pier shall be designed for both situations--with or without the seal coat.
- Include the weight of the seal coat in the DC1 load for the footing piles.

6.6.4.1.4.2 Detailing

For a project with the “Excavate and Dewater” bid item, seal coat details shall be provided on the plans. Also, standard note E832 [BDM 13.8.2] shall be placed on the pier sheet.

Excavation quantities are not considered in the usual manner when the “Excavate and Dewater” lump-sum bid item is used. Both Class 20 and Class 21 excavation along with the cost of cofferdams, seal coats, pumps, and all other required equipment are included in the lump-sum bid item [IDOT SS 2405.05, D]. Therefore, the usual “Class 20” bid item, “Class 21” bid item and the ”Excavation Classification Line” are not required.

6.6.4.2 Pile bents and diaphragm piers

The LRFD guidelines given below shall be used with the LRFD trestle pile bent standard sheet [BSB SS P10L].

6.6.4.2.1 Analysis and design

[AASHTO-LRFD 3.6.5, 5.6.4.4, 6.9.5]

Although the designer has the option of a full structural analysis considering loads, moments, temperature movements, and moment magnification for a pile bent, for typical bridges the designer should use the simplified method for axial load as discussed below. An example for the simplified method and a pile bent constructed with H-piles is given in the commentary [BDM C6.6.4.2.1.1].

The simplified method applies for J-series bridges and for other similar CCS, PPCB, and rolled steel beam (RSB) bridges if the following conditions are met.

- The bridge length does not exceed 250 feet for CCS and PPCB bridges, and 350 feet for RSB bridges.
- The roadway width does not exceed 44 feet.
- The bridge is jointless, with integral abutments and without deck expansion joints.
- All pile bents are fixed without expansion bearings.
- The bridge is straight, without horizontal curvature.
- Stream flow is limited based on Bureau criteria [BDM 6.6.1.1.3].
- The vehicular collision force (CT) does not apply [AASHTO-LRFD 3.6.5].
- Pile bent skew does not exceed 45 degrees.
- The factored temperature movement for half of the full design temperature range [BDM Table 6.6.2.12.2] along the centerline of roadway does not exceed 0.25 inch for CCS and PPCB bridges and 0.45 inch for RSB bridges at a pile bent.
- Maximum cap height is 3 feet for 10-inch and 12-inch piles and 3.5 feet for 14-inch and larger piles. Step heights do not exceed 1.0 foot.
- Piles are embedded 1.0 foot into a monolithic cap or 1.5 feet into a non-monolithic cap.
- Center-to-center pile spacing is not less than the larger of 2.50 feet or 2.5 times the pile size [AASHTO-LRFD 10.7.1.2].
- Pile heights above ground in a pile bent are relatively constant, with maximum ground slope of 1:10 along the bent.

For the simplified method the designer needs to check the following three design conditions at the strength limit state for the sum of the factored dead load, factored live load, and factored dynamic load allowance.

- Structural capacity of the piles above ground: The designer shall check this axial compression capacity at the strength limit state using the guidelines and tables for specific pile types in subarticles below and, if applicable, with consideration of design scour for the H-dimension. It is intended that prestressed concrete piles and concrete-filled steel pipe piles of the same size have equivalent heights, soil penetrations, and resistances. The nominal resistances in Tables 6.6.4.2.1.2 and 6.6.4.2.1.3 result in the same factored resistances when the appropriate phi-factors are applied.
- Structural capacity of the piles in the ground: For steel H-piles the designer shall check this capacity at Structural Resistance Level-1 at the strength limit state using the guidelines in the pile section [BDM 6.2]. For prestressed concrete or steel pipe piles the designer shall check this capacity at the strength limit state using the AASHTO LRFD Specifications [AASHTO-LRFD 5.6.4.4, 6.9.5].
- Geotechnical capacity of the piles: The designer shall use the LRFD procedures at the strength limit state given in the pile section [BDM 6.2] and, if applicable, consider design scour by neglecting any friction bearing above the scour line. Driving resistance given on plans shall include the driving resistance in the scourable soil layers.

For a full structural analysis the designer needs to check the same three conditions, but the structural capacity of the piles above ground needs to be analyzed with a model that considers geotechnical characteristics of the site, the pile bent, and the bridge superstructure.

The weight of concrete encasement for an individual steel H-pile shall be included in the load to the pile, and the weight of full pile bent encasement shall be included in the load to the pile group. The dynamic load allowance (IM) shall be applied to piles above ground and, as a conservative simplification, on the portion of the piles below ground.

Although there often is more than one option for pile type, prestressed concrete and steel pipe piles should not be used in soils with relatively high blow counts. The Bureau has limited recent experience with these pile types in pile bents and, therefore, can only offer the following advice, which also is given in the geotechnical resistance charts [BDM 6.2.7]. The designer should avoid using prestressed concrete

piles in any soil with consistent blow counts above 30 to 35 or steel pipe piles in any soil with consistent blow counts above 40. If there is any question about the use of prestressed concrete or steel pipe piles the designer shall consult with the Soils Design Unit and Construction and Materials Bureau.

Driving points may be needed for piles in some soil conditions. The designer shall verify the need for driving points with the Soils Design Unit.

For continuous concrete slab (CCS) bridges a monolithic cap is the preferred detail for a pile bent or diaphragm pier. In unusual situations in which the piles or substructure may be overstressed by thermal and shrinkage forces, the designer may use a non-monolithic cap. Typical situations that may require a non-monolithic cap are the following:

- A pile bent that has large variations in pile length,
- A fully encased, skewed pile bent, and
- A longer than usual bridge with more than three spans.

A non-monolithic cap also may be required for:

- Diaphragm piers in skewed bridges, and
- Diaphragm piers keyed into rock.

For pile bents, pile cap reinforcing shall be checked assuming limited damage to piles under two conditions: (1) end pile removed with cap as a cantilever, and (2) interior pile removed with cap as restrained beam. For these checks the load factor for HL-93 live load and dynamic load allowance shall be taken as 1.35.

The following guidelines apply to fully encased pile bents.

- To provide for minor misalignment of piles the encasement shall have a minimum thickness of 22 inches for HP-10 piles, a minimum thickness of 24 inches for HP-12 piles, and a minimum thickness of 26 inches for HP-14 piles.
- The minimum distance from centerline of battered end piles to edge of encasement shall be 18 inches.
- When the designer chooses a non-monolithic cap due to movements due to temperature, shrinkage, and skew, the encased pile bent shall have a pier cap keyed to the bottom of the reinforced concrete slab.
- For skewed non-monolithic caps, the ends of beveled keyways should be lined with 1-inch thick strips of resilient joint filler to allow for movement of the superstructure along the skew.

6.6.4.2.1.1 Steel H-piles

Based on a revised general study of the pile bent design conditions for J-series CCS bridges [See the Commentary Appendix for Technical Documents, “Pile bents with steel H-piles.”], the height and nominal resistance values in Table 6.6.4.2.1.1 were determined for the simplified method check of the pile bent above ground. The values in the table for steel H-piles are based on the following conditions.

- Pile webs are parallel with centerline of cap.
- Piles are embedded 1.0 feet into a monolithic cap or 1.5 feet into a non-monolithic cap. Piles are assumed to be partially fixed in both directions at the bottom of a monolithic cap for CCS bridges and fixed in both directions at the bottom of a non-monolithic cap. However, even though piles are assumed to be fixed at a non-monolithic cap, because of compressible material at the top of the cap in the joint with the CCS and PPCB superstructure, a non-monolithic cap is assumed to be partially fixed out-of-plane where it meets the superstructure. For RSB bridges, the top of a non-monolithic cap is assumed to be pinned out-of-plane and fixed in-plane.
- Individual pile encasement extends 3 feet below ground or stream bed [BDM 6.6.4.2.2]. when design scour extends below stream bed, the additional depth shall be considered when comparing pile height with the maximum permissible height (H) in Table 6.6.4.2.1.1.
- HP-10 piles are assumed fixed at a depth of 6 feet, HP-12 piles at 7 feet, and HP-14 piles at 8 feet. Soil has a minimum standard penetration test N_{60}-value of 3 if clay or 5 if sand.

- Individual pile encasement reduces compression buckling length during construction but is nonstructural in service.

Table 6.6.4.2.1.1. Permissible height (H), minimum soil penetration, and nominal axial resistance for selected Grade 50 H-piles in pile bents

H-pile section	Maximum height, H (1), feet		Recommended minimum height, H (2), feet	Minimum soil penetration (3) feet	Nominal Resistance, P_n (4) kips
	Monolithic cap	Non-monolithic cap			
HP 10x42	19	15	7	18	154
HP 10x57	19	16	7	18	208
HP 12x53	23	20	9	21	192
HP 14x73	28	25	13	24	265
HP 14x89	29	26	13	24	324

Table notes:

(1) H is defined as the height from underside of pile bent cap to ground line or stream bed (with design scour, if applicable) [BDM 6.6.4.2.2].

(2) As the pile becomes shorter it becomes stiffer and attracts more moment but has greater axial capacity. Consult with the supervising Unit Leader before using a lesser height.

(3) This distance from ground line or stream bed to bottom of pile is required for the pile to have a point of fixity. If the pile has less embedment it may fail by “fence-post” action.

(4) These nominal resistances are intended to be used with φ_c = 0.70. They were calculated at Structural Resistance Level - 1 (SRL-1) from 1.45*6 ksi*A/0.7, which simplifies to 12.43*A.

An example of structural design for a pile bent constructed with H-piles and design by the simplified method is given in the commentary for this article [BDM C6.6.4.2.1.1]. Two complete pile bent examples for concrete-filled pipe pile and prestressed concrete piles are given in LRFD Pile Design Examples ~ 2013.

6.6.4.2.1.2 Prestressed concrete piles

Based on a general study of the pile bent design conditions for J-series CCS bridges [See the Commentary Appendix for Technical Documents, “Pile bents with prestressed concrete piles.”], the height and nominal resistance values in Table 6.6.4.2.1.2 were determined for the simplified method check of the pile bent above ground. The values in the table for prestressed concrete piles are based on the following conditions.

- Piles are rotated to the bent skew so that two opposite faces of the pile are parallel with the cap.
- Piles are embedded 1.0 feet into a monolithic cap or 1.5 feet into a non-monolithic cap. Piles are assumed to be partially fixed in both directions at the bottom of a monolithic cap for CCS bridges and fixed in both directions at the bottom of a non-monolithic cap. However, even though piles are assumed to be fixed at a non-monolithic cap, because of compressible material at the top of the cap in the joint with the CCS and PPCB superstructure, a non-monolithic cap is assumed to be partially fixed out-of-plane where it meets the superstructure. For RSB bridges, the top of a non-monolithic cap is assumed to be pinned out-of-plane and fixed in-plane.
- When design scour extends below stream bed, the additional depth shall be considered when comparing pile height with the maximum permissible height (H) in Table 6.6.4.2.1.1.

Table 6.6.4.2.1.2. Permissible height (H), minimum soil penetration, and nominal axial resistance for prestressed concrete piles in pile bents

Square pile size, inches	Maximum height, H, feet (1)	Recommended minimum height, H, feet (1), (2)	Minimum soil penetration feet (3)	Nominal axial resistance, P_n kips (4)
14	18	7	24	127
16	22	7	27	146

Table notes:

(1) H is defined as the height from underside of pile bent cap to ground line or stream bed (with design scour, if applicable), depending on the ground feature at the pile bent.
(2) As the pile becomes shorter it becomes stiffer and attracts more moment but has greater axial capacity. Consult with the supervising Unit Leader before using a lesser height.
(3) This distance from ground line or stream bed to bottom of pile is required for the pile to have a point of fixity. If the pile has less embedment it may fail by “fence-post” action.
(4) These nominal resistances are intended to be used with $\varphi_c = 0.75$.

6.6.4.2.1.3 Concrete-filled steel pipe piles

Based on a general study of the pile bent design conditions for J-series CCS bridges [See the Commentary Appendix for Technical Documents, “Pile bents with concrete-filled steel pipe piles.”], the height and nominal resistance values in Table 6.6.4.2.1.3 were determined for the simplified method check of the pile bent above ground. The values in the table for concrete-filled pipe piles are based on the following conditions.

- Piles are embedded 1.0 feet into a monolithic cap or 1.5 feet into a non-monolithic cap. Piles are assumed to partially fixed in both directions at the bottom of a monolithic cap for CCS bridges and fixed in both directions at the bottom of a non-monolithic cap. However, even though piles are assumed to be fixed at a non-monolithic cap, because of compressible material at the top of the cap in the joint with the CCS and PPCB superstructure, a non-monolithic cap is assumed to be partially fixed out-of-plane where it meets the superstructure. For RSB bridges, the top of a non-monolithic cap is assumed to be pinned out-of-plane and fixed in-plane.
- When design scour extends below stream bed, the additional depth shall be considered when comparing pile height with the maximum permissible height (H) in Table 6.6.4.2.1.1.

Table 6.6.4.2.1.3. Permissible height (H), minimum soil penetration, and nominal resistance for concrete-filled steel pipe piles in pile bents

Pipe diameter inches (1)	Maximum height, H, feet (2)	Recommended minimum height, H, feet (2), (3)	Minimum soil penetration feet (4)	Nominal axial resistance, P_n kips (5)
14	18	7	24	119
16	22	7	27	137

Table notes:

(1) Minimum wall thicknesses are Grade 2-0.219 inch and Grade 3-0.203 inch for 14-inch piles and Grade 2-0.230 inch and Grade 3-0.230 inch for 16-inch piles.
(2) H is defined as the height from underside of pile bent cap to ground line or stream bed (with design scour, if applicable), depending on the ground feature at the pile bent.
(3) As the pile becomes shorter it becomes stiffer and attracts more moment but has greater axial capacity. Consult with the supervising Unit Leader before using a lesser height.
(4) This distance from ground line or stream bed to bottom of pile is required for the pile to have a point of fixity. If the pile has less embedment it may fail by “fence-post” action.
(5) These nominal resistances are intended to be used with $\varphi_c = 0.80$.

6.6.4.2.2 Detailing

Cap steel detailed on standard sheets [BSB SS P10L] shall be used wherever pile head embedment is less than 1.5 feet. The cap steel detailing in the J-series and H-series standard bridge plans illustrates how the steel is to be placed.

Where encasement is required for individual piles or for an entire bent the encasement shall extend as follows:

- If the bridge does not cross a stream, the encasement shall extend 3 feet below ground elevation at the bent.
- If the bridge crosses a stream, the encasement shall extend 3 feet below stream bed elevation unless the extension is not practical. The additional extension is intended to account for channel migration and degradation even if the bent is not in the stream. If the extension exceeds 6 feet below ground at the bent the extension may not be practical, and the designer shall discuss the extension with the supervising Unit Leader.

C6.6 Piers

C6.6.1.1.1 Frame pier

15 March 2012

In the past the office generally has preferred tapered cantilevers for frame pier caps, but the office now prefers constant depth cantilevers. Because pier caps for frame piers are typically formed with studded plywood rather than steel forms any change to the cantilever geometry should not increase formwork costs significantly. The benefits of tapered frame pier caps over rectangular frame pier caps are generally limited to a moderate reduction in concrete quantity and a moderate aesthetic advantage.

The benefits of a rectangular frame pier cap over a tapered frame pier cap are more extensive:

- Simplification of forming for the end of the pier cap, including the cap support system.
- Elimination of the bent bars and variable shear stirrups at the end of the cap. This in turn reduces issues with maintaining reinforcing clearance at the form face. Additionally, the number of bar marks will be reduced.
- Easier layout and tying of reinforcement. Elimination of the end tapers will simplify assembly of the reinforcement cage.
- Simplification of pier cap design.

2011 ~ Selection of Frame or T-Pier

These changes refer back to BDM 6.6.2.6 for the vehicular collision force policy. AASHTO is likely to be changing the policy in 2011, and the office can better manage its response if the policy is in one location only.

C6.6.1.1.1. T-pier

2011 ~ Selection of Frame or T-Pier

These changes refer back to BDM 6.6.2.6 for the vehicular collision force policy. AASHTO is likely to be changing the policy in 2011, and the office can better manage its response if the policy is in one location only.

C6.6.1.2. Vehicular collision force

22 May 2012

Because of significant changes to the vehicular collision force guidelines in the 2012 AASHTO LRFD Specifications the office decided to make the AASHTO changes (with minor modifications) in the July 2012 Bridge Design Manual release.

07 December 2016 ~ Collision design requirements for frame piers without crash walls

The office has updated its policy with respect to collision design requirements for multi-column frame piers without crash walls.

Some sources of information regarding the policy include TTI research reports and policies from several other state DOTs particularly Wisconsin, Florida, and Texas as listed below.

- C.E. Buth, W.F. Williams, M.S. Brackin, D. Lord, S.R. Geedipally, A. Abu-Odeh, Analysis of Large Truck Collisions with Bridge Piers: Phase 1. Report of Guidelines for Designing Bridge Piers and Abutments for Vehicle Collisions, Texas Transportation Institute (TTI) Technical Report 9-4973-1, May 2010 (http://tti.tamu.edu/publications/catalog/record/?id=31734)
- C.E. Buth, M.S. Brackin, W.F. Williams, G. Fry, Collision Loads on Bridge Piers: Phase 2. Report of Guidelines for Designing Bridge Piers and Abutments for Vehicle Collisions, Texas Transportation Institute (TTI) Technical Report 9-4973-2, March 2011 (http://tti.tamu.edu/publications/catalog/record/?id=31735)
- Wisconsin DOT considers solid shafts and hammerhead pier shafts adequately designed for collision based on their standard designs. Multi-columned piers require a minimum of three columns, minimum 4.0 feet

column diameters, 1% minimum vertical column reinforcement based on gross section, and #4 spiral reinforcement (smooth bars) spaced vertically at 6" as a minimum. [Bridge Manual, Article 13.4.10, July 2016, Wisconsin DOT, http://wisconsindot.gov/dtsdManuals/strct/manuals/bridge/ch13.pdf]

- Florida DOT considers the vehicular collision force as a point load on the pier column with no distribution of force due to frame action within the pier, foundation, and superstructure. No further analysis of the piles, footings, pier cap, or other columns is required. The column shear capacity is checked assuming failure along two shear planes inclined at 45 degrees above and below the point of force application. [Structures Design Guidelines, Volume 1, Article 2.6.8, January 2017, Florida DOT, http://www.fdot.gov/structures/StructuresManual/CurrentRelease/Vol1SDG.pdf]
- Texas DOT allows the column to be designed for only the shear created by the collision force and does not consider the transfer of the force to other elements such as bent caps, footings, piles, or drilled shafts. Conservatively the shear capacity of the column can be determined using a β of 2.0 and θ of 45 degrees without consideration of axial loads. Piers with three or more columns may use two shear planes to distribute the collision force. Additionally single column piers with a gross-sectional area of 40 square feet and a least dimension of no less than 5 feet with column transverse reinforcement of at least #4 ties at a 12 inch pitch are assumed to meet the collision force requirements. [Bridge Design Manual – LRFD, Chapter 2, Section 2, October 2015, Texas DOT, http://onlinemanuals.txdot.gov/txdotmanuals/lrf/lrf.pdf]

Consider the 600 kip vehicular collision force per LRFD as a point load acting on the pier column. Neglect any distribution of force due to frame action within the pier, foundation and superstructure. Further analysis of the piles, footings, pier cap, other columns, etc., is not required. Check the column shear capacity assuming failure along two shear planes inclined at θ above and below the point of force application. Under this design procedure the impacted structure is expected to remain stable and to continue to support the bridge superstructure subsequent to the collision event.

The Iowa DOT design for the column shear capacity is based on the MCFT method in AASHTO LRFD 2014 Article 5.8.3.4.2.

28-day concrete strength, $f'_c = 4.0$ ksi
Yield strength of shear reinforcement, $f_y = 60.0$ ksi

Column diameter = 48.0"
Shear reinforcement bar size = #5
Shear reinforcement spacing = 4.0"
Longitudinal reinforcement bar size (assumed) = #11
Cover to shear reinforcement = 2.0"

From AASHTO LRFD 2014 Article C5.8.2.9:

b_v = column diameter = 48.0"
D = column diameter = 48.0"
D_r = diameter of circle passing through the centers of the longitudinal reinforcement
= 48.0" - (2)*(2.0" + 0.625" + 0.5*(1.410")) = 41.34"
$d_e = (D/2) + (D_r)/\pi = (48.0"/2) + (41.34"/\pi) = 37.16"$
$d_v = 0.9d_e = (0.90)*(37.16") = 33.44"$

Assume $\varepsilon_s = 0.006$ in/in
$\beta = 4.8/(1 + 750\varepsilon_s) = 4.8/(1 + (750)*(0.006 \text{ in/in})) = 0.873$
$\theta = 29 + 3500\varepsilon_s = 29 + (3500)*(0.006 \text{ in/in}) = 50$ deg

Concrete shear resistance
$V_c = 0.0316\beta(f'_c)^{0.5}b_vd_v = (0.0316)*(0.873)*((4.0 \text{ ksi})^{0.5})*(48.0")*(33.44") = 88.56$ kips

Shear reinforcement resistance
Assume $\alpha = 90$ deg
$V_s = (A_vf_yd_v(\cot\theta + \cot\alpha)\sin\alpha)/s$

= (2 legs)*(0.31 in^2)*(60.0 ksi)*(33.44")*(cot(50 deg) + cot(90 deg))*(sin(90 deg))/(4.0") = 260.95 kips

One shear plane

$V_n = V_c + V_s$ = 88.56 kips + 260.95 kips = 349.51 kips

Two shear planes

V_n = (2)*(349.51 kips) = 699.02 kips

Assume ϕ_v = 0.90 per AASHTO LRFD 2014 Article 5.7.2.1, not Article 1.3.2.1

$\phi_v V_n$ = (0.90)*(699.02 kips) = 629.11 kips > 600 kips

C6.6.1.3. Earthquake

4 June 2008 ~ Summary

The AASHTO LRFD seismic requirements were made considerably more complex in the 2008 interim. The 2007 specifications varied the restrained horizontal connection design forces in Seismic Zone 1 as either 0.1 or 0.2 times the tributary load, but the 2008 interim sets the horizontal connection force as either 0.15 or 0.25 times the tributary load. The 2008 interim also removes an elastomeric bearing requirement that clouded the use of a friction coefficient of 0.2.

2007 AASHTO LRFD Specifications: From the beginning of the seismic article through the Seismic Zone 1 requirements there were 10 non-blank pages organized in what seemed to be a logical sequence.

- The design process depended on the Acceleration Coefficient, A. For Iowa, A varied between 0.02 for northeastern Iowa to 0.053 in southwestern Iowa [AASHTO-LRFD Figure 3.10.2-2].
- Because all Iowa Acceleration Coefficients did not exceed 0.09, all of Iowa was in Seismic Zone 1 [AASHTO-LRFD Table 3.10.4-1].
- Site Coefficients, S, varied from 1.0 for Soil Profile Type I (best profile) to 2.0 for IV (worst profile).
- For Seismic Zone 1 with $A \leq 0.025$ and Soil Profile Type I or II the horizontal design connection force in the restrained direction was 0.1 times the vertical reaction due to the tributary permanent load and the tributary live loads assumed to exist during an earthquake [AASHTO-LRFD 3.10.9.2].
- For all other cases in Seismic Zone 1 the horizontal design connection force in the restrained direction was 0.2 times the vertical reaction due to the tributary permanent load and the tributary live loads assumed to exist during an earthquake [AASHTO-LRFD 3.10.9.2].
- For elastomeric bearings a design coefficient of friction could be assumed as 0.2 between elastomer and clean steel or concrete [AASHTO-LRFD C14.8.3.1]. That assumption was clouded by another rule regarding friction at the strength limit state [AASHTO-LRFD 14.7.6.4] (which was removed in the 2008 Interim).

2008 AASHTO LRFD Specifications: From the beginning of the seismic article through the Seismic Zone 1 requirements there are 42 non-blank pages, many of which are maps.

- The seismic design process depends on three coefficients determined from maps and three factors determined from tables. Two coefficients and two factors are applicable to Seismic Zone 1 requirements.
- Seismic Zone 1 is defined by an acceleration coefficient, $S_{D1} < 0.15$, which is determined by $S_{D1} = F_v S_1$ [AASHTO-LRFD 2008 Table 3.10.6-1, 3.10.4.2]. From the map for Iowa, S_1 varies from 0.019 in northwestern Iowa to 0.044 in extreme southeastern Iowa [AASHTO-LRFD 2008 Figure 3.10.2.1-3]. F_v varies from 0.8 for Site Class A to 3.5 for Site Class E [AASHTO-LRFD 2008 Table 3.10.3.2-3]. Site Class is defined for different soil types and layers from A to F [AASHTO-LRFD 2008 Table 3.10.3.1-1]. Site Class F is defined for peat, very high plasticity clays, or more than 120 feet of soft/medium stiff clays. For Site Class F a site specific analysis is recommended.
- All of Iowa, with the possible exception of a few sites in extreme southeastern Iowa (Lee County) generally would be classified as Seismic Zone 1 as follows: northwestern Iowa S_{D1} = (0.019)(3.5) = 0.0665 maximum (except Site Class F); extreme southeastern Iowa S_{D1} = (0.044)(3.5) = 0. 154 maximum (except Site Class F). Extreme southeastern Iowa sites with Site Class E or F soil profiles could be considered Seismic Zone 2 under a strict interpretation of the AASHTO LRFD Specifications.

- The forces to be applied to bearing connections in Seismic Zone 1 depend on the short period acceleration coefficient, $A_s < 0.05$, which is determined by $A_s = F_{pga}PGA$ [AASHTO-LRFD 2008 3.10.9.2, 3.10.4.2]. From the map for Iowa, PGA varies from 0.015 in north central Iowa to 0.040 in southeastern Iowa. F_{pga} is to be taken for the applicable Site Class [AASHTO-LRFD 2008 Table 3.10.3.2-1].
- The A_s in Iowa will vary above and below 0.05 depending on Site Class. Therefore, the horizontal design connection force in the restrained direction will be either 0.15 or 0.25 times the vertical reaction due to the tributary permanent load and the tributary live loads assumed to exist during an earthquake [AASHTO-LRFD 2008 3.10.9.2]. In general the 0.15 factor will apply for northern Iowa and the 0.25 factor will apply in southern Iowa, but the designer will need to check for the specific bridge site.
- For elastomeric bearings a design coefficient of friction may be assumed as 0.2 between elastomer and clean steel or concrete [AASHTO-LRFD 2008 C14.8.3.1]. Generally if not restrained, steel reinforced elastomeric bearings in Seismic Zone 1 need not be anchored other than by friction [AASHTO-LRFD 2008 C3.10.9.2]. However, before making the final decision regarding anchorage, the designer shall consider the rules in the steel reinforced elastomeric pads article in the manual [BDM 5.7.4.2].

C6.6.2.12 Uniform temperature

C6.6.2.12.3 Out-of-plane forces

17 January 2003 ~ Policy discussion with Assistant Bridge Engineer

There have been two guidelines in the office for determining the locations of axial fixity for piles. The older guideline is from the 1979 version of "Design Criteria for Piers":

> The pile length used to determine the footing rotation is assumed to be 50% and 75% of the pile length for timber and steel piling respectively.

The more recent guideline is the following:

> The percent of the pile length used to determine the footing rotation is assumed to be:
> (1) 50% when most of the pile capacity is due to friction bearing; generally wood, prestressed concrete, or steel piles not driven to bedrock, or
> (2) 75% when most of the pile capacity is due to end bearing, generally steel piles driven to bedrock.

For current design, use the more recent guideline. It is based on two concepts. The first concept is that a friction pile will transfer its load to the soil over the entire length of the pile, and thus axial deformation effectively will occur over half the pile length. The second concept is that an end bearing pile typically will transfer some load by friction and thus will not deform axially over its full length but over more length than a friction pile. The 75% value is a judgment factor.

C6.6.1.4. Shrinkage

9 May 2008 ~ Summary

Generally, it is recognized that creep relieves a part of the stresses caused by shrinkage in restrained members but that it may be necessary to reinforce for shrinkage stresses. The AASHTO LRFD Specifications do not cover shrinkage in frames directly. However, for prestressed structures the specifications indicate that the designer need only consider initial elastic deformation for columns in monolithic frames and that other members will be subjected to reduced forces due to creep. Although there are no simple recommendations for shrinkage of frame piers, it is reasonable to use the AASHTO 28-day shrinkage coefficient of 0.0002 for design forces and provide the usual shrinkage and temperature reinforcement. Even though the shrinkage forces computed for 0.0002 will be reduced by the AASHTO LRFD load factor in strength limit state combinations, shrinkage forces will be included in every limit state rather than in only three load combinations under the AASHTO Standard Specifications.

Shrinkage research and standards

New York researchers (Antoni and Beal, 1971) instrumented a bridge pier to verify the AASHO 1964 specification requirements for coefficient of thermal expansion, temperature variation, and shrinkage. There were difficulties with

the instrumentation, and the researchers could not separate temperature effects from shrinkage effects, but the researchers concluded that the 0.0002 shrinkage coefficient was reasonable.

In recent years there has been much study of concrete shrinkage in the hope that cracking could be reduced or eliminated. In overlays and composite structures the existing structure generally has undergone most or all of its shrinkage, and the new concrete is intended to be bonded to that structure and yet undergo shrinkage without cracking. Because of the infinite variety of concrete mixtures, the wide variety of structural conditions, the related factors such as thermal expansion/contraction and creep, and the differences between tension and compression creep, researchers have not found any simple and definitive answers to questions regarding shrinkage.

One researcher, however, has suggested that at two years creep reduces sustained tensile stresses by about one-third (Alexander 2005, 2007). The researcher also suggested that the designer provide reinforcement for tension caused by shrinkage.

The AASHO/AASHTO Standard Specifications have included the concrete shrinkage coefficient of 0.0002 since 1941. Specifications of that vintage had no commentary, so the source of the coefficient is unknown, except that New York researchers attribute the coefficient to experimental data from small laboratory specimens (Antoni and Beal, 1971).

The ISU strip seal report (Bolluyt et al. 2001) concluded that 0.0002 was an appropriate shrinkage value for concrete decks on prestressed beams or steel girders, although some of the bridges studied indicated more or less shrinkage. The report did not recommend any modification factors. (There was no proposal to use modification factors with thermal expansion/contraction either, but there was a recommendation to increase the temperature range for computing concrete bridge thermal movements.)

Of the surrounding six states, only Nebraska (0.0002) and Wisconsin (0.0003) include concrete shrinkage in their strip seal designs. In the ISU report there is no indication of whether the states include shrinkage in frame pier design.

The AASHTO LRFD equations for shrinkage and compressive creep [AASHTO-LRFD 5.4.2.3] show that both develop in the same pattern and, assuming the strain in concrete is about 10% of the crushing strain (among other assumptions), the creep and shrinkage curves approximately match. Using the shrinkage equation with assumptions, shrinkage can be computed of about 0.0007 at one year and 0.0008 at 2.5 years. The AASHTO LRFD Specifications, however, generally indicate shrinkage of 0.0002 at 28 days and 0.0005 at one year [AASHTO-LRFD 5.4.2.3.1].

The AASHTO LRFD Specifications do require that effects of prestressing deformations on adjoining elements of the structure be evaluated [AASHTO-LRFD 5.9.2]. These deformations could be considered to be similar to shrinkage deformations. Additionally the specifications state the following:

> In monolithic frames, force effects in columns and piers resulting from prestressing the superstructure may be based on the initial elastic shortening.
>
> For conventional monolithic frames, any increase in column moments due to long-term creep shortening of the prestressed superstructure is considered to be offset by the concurrent relaxation of deformation moments in the columns due to creep in the column concrete.
>
> The reduction of restraining forces in other members of a structure that are caused by the prestress in a member may be taken as….

Considering the statements above, it is prudent to include some value of shrinkage in design. The statement regarding use of initial elastic shortening in monolithic frames could be taken to suggest the shrinkage coefficient of 0.0002 at 28 days. The next AASHTO statement could be taken to suggest that relaxation due to creep will relieve additional column moments due to shrinkage after 28 days. The AASHTO slowly imposed deformation equation (not copied above) with assumptions indicates that a 100-kip force, such as a cap force based on shrinkage, for time from 28 days to 896 days would reduce to 43 kips, less than half the initial force.

References

Alexander, S.J. (2007). "The Importance of Time in Understanding Concrete Behavior," *Conference on Structural Implications of Shrinkage and Creep of Concrete, SP-246*, pp 283-289.

Alexander, S.J. (2005). "Managing Deflection, Shortening and Cracking Arising from Restrained Contraction," *Shrinkage and Creep of Concrete, SP 227*, pp 1-20.

American Association of State Highway Officials (AASHO). (1941) *Standard Specifications for Highway Bridges, Third Edition,* American Association of State Highway Officials, Washington, DC.

Antoni, C.M. and D.B. Beal. (1971). *Temperature and Shrinkage Stresses in a Concrete Bridge Pier, Research Report 69-6*, Engineering Research and Development Bureau, New York Department of Transportation, Albany, New York.

Bolluyt, J.E., V.B. Kau, and L.F. Greimann. (2001). *Performance of Strip Seals in Iowa Bridges, Pilot Study, Final Report Project TR-437,* College of Engineering, Iowa State University, Ames, Iowa.

C6.6.3.2 Limit states

2010 ~ Service I Limit State

With use of LEAP Bridge Concrete Substructure (formerly RCPIER) software the Service I load combination may appear to control pile design, however there is no need to consider Service I for strength design of piles. Service I may be used to check settlement of piles.

C6.6.4.1 Frame piers and T-piers

2010 ~ Location of fixity for frame and T-piers on pile footings

Column analysis and design is sensitive to slenderness, and the designer should not model a column taller than the structural configuration allows. Although it would be acceptable to model a pier column as fixed at 2 feet below top of footing or at mid-depth of footing, the column is restrained significantly at the top of footing, and the designer should assume fixity at that elevation to minimize slenderness. Available pier software makes it relatively easy to analyze alternate models, and for pile and footing design the designer should assume pier columns extend to bottoms of footings.

C6.6.4.1.1 Pier cap

C6.6.4.1.1.1 Analysis and design

April 2013 ~ Guidelines for mass concrete

Previous guidelines for mass concrete have been misinterpreted due to aesthetic shapes and unusual configurations. The revised statement in this article

> "… when the least dimension of any element exceeds 4.5 feet".

is intended to identify the large volumes of concrete that need to be considered mass concrete. There may be cross sections along a tapered cap that meet the above definition of mass concrete and those that do not, but the sections that meet the definition classify the cap as mass concrete, and therefore require the mass concrete provisions.

2011 ~ Longitudinal Reinforcement for Shear

Equation 5.8.3.5-1 will compute additional longitudinal reinforcement anywhere along a member where there is non-zero factored shear. For a typical frame pier cap, LEAP Bridge Concrete Substructure (formerly RCPIER) will provide the area of the additional reinforcement at sections along the cap selected by the engineer.

The AASHTO LRFD Specifications, however, permit the designer to neglect the additional reinforcement at certain locations as follows:

> "The area of longitudinal reinforcement on the flexural tension side of the member need not exceed the area required to resist the maximum moment acting alone. This provision applies where the reaction force or the load introduces direct compression into the flexural compression face of the member."

For direct loading this exception is shown graphically in AASHTO LRFD Figure C5.8.3.5-2 extending a distance $d_v \cot\Theta$ either side of the maximum moment. For the typical frame pier cap with two cantilevers, the exception will apply at each support column and at each beam bearing where M_u is maximum (V_u changes sign) in the cap. The designer should make use of this exception.

2010 ~ Longitudinal Reinforcement for Shear

The requirement in the AASHTO LRFD Specifications for longitudinal reinforcement for shear [AASHTO LRFD 5.8.3.5] was added to the specifications at the same time as modified compression field theory. The requirement substitutes for ACI Code and AASHTO Standard Specifications rules for end supports, points of inflection, and cutoffs in tension zones. Because AASHTO LRFD Figure C5.8.3.5-2 does not show a cantilever condition, designers have asked whether the requirement would increase the top steel in pier cap cantilevers. Numerical examples indicated that the increase could be significant.

Examples in the literature are inconclusive, but a cantilever truss analogy worked in the office similar to the simple span truss analogy in *Reinforced Concrete Mechanics and Design, Fifth Edition* by Wight and MacGregor showed that the top steel in a pier cap cantilever need not be increased beyond that required for moment at the pier column. As in AASHTO LRFD Figure 5.8.3.5-2 the demand for longitudinal reinforcement did increase away from the support over the entire distance to the free end. For a typical pier cap cantilever design without bar cutoffs the top reinforcement is not affected.

12 April 2012

Torsion on a pier cap can be developed in a number of ways such as:

- Some degree of fixity between the pier cap and the superstructure,
- An eccentric bearing line or eccentric bearing lines with respect to the centerline of the cap,
- Lateral loads acting at the top of the cap, or
- Unbalanced vertical dead and live load on two sets of bearing lines. This will cause torsion whether or not there is an expansion joint at the pier.

The usual reinforcement cage for a pier cap includes longitudinal corner bars and regularly spaced transverse hoops. This cage typically will have a small amount of torsional resistance available beyond flexural and shear resistance and, as a result, the designer may use judgment to avoid checking torsion for a typical pier cap.

C6.6.4.1.2 Pier column

C6.6.4.1.2.1 Analysis and design

April 2013 ~ Guidelines for mass concrete

Previous guidelines for mass concrete have been misinterpreted due to aesthetic shapes and unusual configurations. The revised statement in this article

> "… when the least dimension of any element exceeds 4.5 feet".

is intended to identify the large volumes of concrete that need to be considered mass concrete. There may be cross sections along a tapered column that meet the above definition of mass concrete and those that do not, but the sections that meet the definition classify the column as mass concrete, and therefore require the mass concrete provisions.

2011 ~ Minimum T-Pier Column Reinforcement

In order to limit longitudinal reinforcement in large pier columns, designers in the past have been permitted to consider a reduced effective cross section area, if that reduced area had a minimum of 1% reinforcement. To be in compliance with the AASHTO LRFD Specifications in 2001, the office additionally restricted the minimum reinforcement to 0.7% of the actual gross area.

Since 2001 Article 5.7.4.2 in the AASHTO specifications has been revised to consider f'_c and f_y in setting the minimum reinforcement for the gross area. Equation 5.7.4.2-3 now limits the minimum reinforcement to 0.79% of the gross column area for f'_c = 3.5 ksi and f_y = 60 ksi. For f'_c = 4 ksi and f_y = 60 ksi the minimum reinforcement must be 0.90% of the gross area. In some cases, even with one of these reductions, there is difficulty in fitting the longitudinal reinforcement at the perimeter of a large pier column.

For bridges in Seismic Zone 1 the current AASHTO LRFD Specifications also permit a reduced effective column area provided that the reinforcement is the larger of 1% for the reduced area or the amount from Equation 5.7.4.2-3 for the reduced area. However there is no minimum limit for the reduced effective area. Based on previous successful experience the office will allow the designer to design for a reduced effective area that as a minimum is 50% of the actual area. This minimum area follows ACI 318-08 Article 10.8.4.

2010 ~ Structural Models for Piers
Initially with the use of LEAP Bridge Concrete Substructure (formerly RCPIER) the office recommended that designers model piers with columns fixed 2 feet below the top of footing. This modeling applied for both pier frame and foundation and made it possible to run the software only once. However, this modeling resulted in columns 2 feet taller than they actually were and, in some cases, led to a significant increase in moment magnification.

In order to minimize moment magnification the office now is giving designers the option of fixing the columns at the tops of the footings. This option will require the designer to run the software twice, once for the pier columns and cap and once for the footings and piles.

2010 ~ Pier Column Shear Reinforcement
Pier columns subjected to significant lateral loads need to be designed for shear as well as axial loads. The text of the manual was revised to alert the designer to the need to meet both shear stirrup and column tie requirements.

C6.6.4.1.3 Pier footing

C6.6.4.1.3.1 Analysis and design

2010 ~ Structural Models for Piers
The option of using two models in LEAP Bridge Concrete Substructure (formerly RCPIER) reduces the effect of moment magnification for design of pier columns. See C6.6.4.1.2.1 for additional information.

21 March 2001 / Revised 29 January 2003 ~ Punching Shear and Wide Beam Shear (For LRFD neglect references to AASHTO Standard Specifications.)

Pre-LRFD the manual gave rules for checking piles at design and check scour conditions under the AASHTO Standard Specifications. The rules were based on service load design (SLD) and have been updated for the AASHTO LRFD Specifications. The following is a brief summary of the LRFD specifications regarding scour.

Service limit state
- 10.5.2: Consider foundation movements, including movement at the design scour condition.
- 10.5.5.1: Use a resistance factor of 1.0 for deflection at the design scour condition.
- 10.7.2.1: Evaluate overall stability for loss of support due to scour.

Strength limit state
- 10.5.3.1: Consider loss of support due to scour at the design flood.

- 10.5.5.2.1: Factored foundation resistance after design flood scour must be greater than factored load with scoured soil removed.
- 10.5.5.2.3: Use resistance factors specified for geotechnical resistance, structural resistance, and drivability analysis.
- 10.7.3.6: Select pile penetration to be adequate after scour. Consider debris loads during flood event.

Extreme event limit state

- C10.5.4: Design for check flood scour.
- 10.5.5.3.2: Nominal resistance ($\varphi = 1.0$) after check flood scour is to be adequate for unfactored strength limit state loads. For uplift take $\varphi = 0.8$ or less. Consider debris loads during the check flood.
- 10.7.4: Use check flood and resistance factors from 10.5.5.3.2.

For geotechnical design the former procedures are superseded by the AASHTO LRFD Specifications, which are more liberal for check scour. After severe flooding, scour will be evaluated by Iowa DOT bridge inspection teams under the Scour Watch program, and therefore, under check scour conditions, safety will be assured by design, field inspection, and bridge closures.

For structural design, Structural Resistance Level - 2 (analogous to 9 ksi) at KL/r of 80 for design scour has been taken as the basic condition and extrapolated under LRFD to Structural Resistance Level – 3. For check scour the maximum slenderness has been taken at 120 (the maximum for a main compression member) for Structural Resistance Levels 1 to 3. This will result in a small apparent margin of safety for piles under check scour, more than required by the AASHTO LRFD Specifications, which will allow some capacity for bending of the pile under stream flow pressure. If the superstructure is partially or fully inundated by the 100-year flood the designer will be required to check the 500-year flood condition at the extreme event limit state as discussed in BDM 6.6.2.7.

For Table 6.6.4.1.3.1-1 the maximum slenderness ratios for design scour were determined to provide an apparent margin of safety, γ/φ (load factor/resistance factor), of about 3.4 for a compression load. The maximum slenderness ratio of 120 [AASHTO-LRFD 6.9.3] at the check scour condition results in an apparent margin of safety of about 1.4, minimum, for compression load. Because the basic column stability formula was changed from the AASHTO Standard Specifications to the AASHTO LRFD Specifications, the apparent margins of safety in the two specifications cannot be compared directly.

Steel H-piles for Structural Resistance Level 4 shall be fully analyzed and designed for design and check scour conditions.

References

Galambos, T.V., Ed. (1998). *Guide to Stability Design Criteria for Metal Structures, Fifth Edition,* John Wiley & Sons, Inc., New York, NY.

Tide, R.H.R. (2001). "A technical note: derivation of the LRFD column design equations," *Engineering Journal,* third quarter, 137-139.

17 May 2018 ~ Frame pier and T-pier pile footings with shallow bedrock requiring rock coring

Rock coring for frame pier and T-pier footings may be required for pile stability when there is less than 10 feet of soil between the bottom of the pier footing and top of bedrock. Confirm with the Chief Structural Engineer the necessity and feasibility of using rock coring for pile footings under this situation.

The designer should carefully consider whether battered piles are required for piers with rock coring. Prebored holes for battered piles are more likely to require casing to maintain the hole. Drilling and coring operations are also more difficult for battered piles.

In the text below the term rock socket is specifically reserved for the bottom 3 feet of the rock core that is filled with concrete in order to lock the piles in place. Any rock coring above the bottom 3 feet is referred to as cored rock prebore. Any prebore of the soil above the top of bedrock is referred to as soil prebore.

The soil prebore and any cored rock prebore shall have a minimum diameter 4 inches greater than the maximum cross-sectional dimension of the pile. The rock socket shall have a minimum diameter 2 inches greater than the maximum cross-sectional dimension of the pile. [Example: For HP10 steel piles specify a minimum of 18 inches for the diameter of prebored holes in soil and rock and a minimum of 16 inches for the diameter of rock sockets.]

The minimum depth of the rock socket shall be 3 feet into sound rock. The piles shall be seated by driving the pile to the target driving resistance. A minimum of 3 feet of Class C structural concrete shall be placed in the bottom of the rock socket to lock the base of the piles in place. The concrete may be placed before or after the piles are seated. The contractor shall make a reasonable effort to clean the bottom of the socket before inserting pile or placing concrete. If piles are seated after the concrete is placed, then a retarder may be required to ensure the concrete remains plastic while the piles are driven. The contractor shall brace the piles in the correct position until the concrete achieves 4 ksi compressive strength. The remaining portion of the holes shall be backfilled with granular material.

When rock coring is required the designer shall generally indicate the following on the Longitudinal Section Along Centerline Approach Roadway of the Situation Plan sheet:

- Type, size, and length of pile
- Bottom of pier footing elevation
- Bottom of prebored hole elevation, diameter of prebored hole, and length filled with granular material
- Anticipated top of rock elevation
- Minimum bottom of rock socket elevation, socket diameter, and length filled with concrete

The General Notes shall reference rock coring notes on the pier sheets. For example:

> THE BRIDGE CONTRACTOR SHALL PREBORE HOLES FOR PILES AT PIERS _____. HOLES SHALL BE BORED TO THE ELEVATIONS SHOWN ON THE "LONGITUDINAL SECTION ALONG CENTERLINE APPROACH ROADWAY" ON DESIGN SHEET _____. SEE PIER PILING NOTES ON DESIGN SHEET _____ FOR SPECIAL ROCK CORING REQUIREMENTS.

The following notes or similar ones shall be included with the pier plan sheets:

> THE _____ INCH DIAMETER PREBORED HOLE IN THE SOIL SHALL EXTEND FROM THE BOTTOM OF THE PIER FOOTING TO THE TOP OF THE _____ STRATUM AS SHOWN ON THE SOIL PROFILE SHEET WHICH IS ANTICIPATED AT ELEVATION _____. THE _____ INCH DIAMETER ROCK SOCKET SHALL BE CORED TO ELEVATION _____ OR LOWER SUCH THAT THE BOTTOM OF THE SOCKET SHALL BE AT LEAST 3 FEET INTO THE _____ STRATUM. THE CONTRACTOR SHALL CLEAN THE BOTTOM OF THE ROCK SOCKET BEFORE INSERTING PILES OR PLACING CONCRETE.
>
> SEAT THE PILING IN THE BEDROCK BY DRIVING IT TO THE TARGET DRIVING RESISTANCE. THE NUMBER OF HAMMER BLOWS SHALL BE LIMITED TO PREVENT DAMAGE TO THE PILING. THE SOCKET SHALL BE BACKFILLED WITH 3 FEET OF CLASS "C" STRUCTURAL CONCRETE BEFORE OR AFTER DRIVING PILES. CONCRETE PLACED BEFORE PILES ARE DRIVEN SHALL REMAIN PLASTIC UNTIL PILE DRIVING IS COMPLETE. RETARDER MAY BE REQUIRED AS DIRECTED BY THE ENGINEER. PILES SHALL BE BRACED IN THE CORRECT POSITION UNTIL CONCRETE HAS REACHED 4 KSI COMPRESSIVE STRENGTH. THE REMAINING PORTION OF THE HOLES SHALL BE BACKFILLED WITH GRANULAR MATERIAL.
>
> IF BEDROCK IS NOT ENCOUNTERED ABOVE ELEVATION _____, THEN NO ADDITIONAL PREDRILLING IN THE SOIL IS REQUIRED AND NO "CORING ROCK SOCKET" QUANTITY SHALL BE MEASURED FOR PAYMENT. THE PILE SHALL BE DRIVEN INTO ROCK IN ACCORDANCE WITH THE STANDARD SPECIFICATIONS.

When rock coring is specified designers shall include bid item 2599-999909 CORING ROCK SOCKET with units of linear feet. A rock coring bid item reference note similar to the following shall be included:

> THE QUANTITY OF "CORING ROCK SOCKET" IS BASED ON THE ANTICIPATED TOP OF ROCK ELEVATION AND CORING _____ FEET INTO THE ROCK FOR EACH PILE IN PIERS _____. THE NUMBER OF LINEAL FEET OF ROCK CORING WILL BE MEASURED IN THE FIELD AND PAID FOR

AT THE CONTRACT UNIT PRICE BID PER LINEAL FOOT. THE PRICE BID INCLUDES THE COST OF PREDRILLING _____ INCH DIAMETER ROCK SOCKETS A MINIMUM _____ FEET INTO _____. THE FOLLOWING COSTS SHALL BE INCIDENTAL TO THE CONSTRUCTION PRICE: DRILLING OR EXCAVATING TO THE TOP OF THE BEDROCK TO OBTAIN ACCESS FOR CORING, DISPOSING OF ALL EXCAVATED MATERIAL, ANY CASING REQUIRED TO KEEP HOLE OPEN, FURNISHING AND PLACING CLASS "C" STRUCTURAL CONCRETE TO BACKFILL THE SOCKET TO THE REQUIRED ELEVATION, AND BACKFILLING THE HOLES FROM THE TOP OF SOCKET CONCRETE TO THE BOTTOM OF PREBORE ELEVATION WITH GRANULAR MATERIAL. IF PIER PILES CAN BE DRIVEN TO A MINIMUM _____ FEET OF LENGTH, NO MEASUREMENT OR PAYMENT WILL BE MADE FOR "CORING ROCK SOCKET".

C6.6.4.1.4 Seal coat

For this LRFD manual the loads, resistances, and factors were calibrated directly from service load design (SLD). Computations and checks under either SLD or LRFD should give the same results.

C6.6.4.2.1.1 Steel H-piles

Steel H-pile, pile bent example for structural design only:

Given: Three-span (67'-6, 80'-0, 67'-6) PPCB bridge over gully without stream, 218 feet long
with 40-foot roadway and 15-degree skew
Steel H-piles
Factored total DC + DW + LL + IM load at pile bent = P_u = 1800 kips
Maximum height to underside of non-monolithic cap = 18 feet
Ground slope along pile bent 1:30 maximum
Soil profile: 0-3 feet: top soil
3-75 feet: firm - very firm glacial clay with N = 14

(1) Determine size and number of H-piles for structural condition above ground

Check applicability of Bridge Design Manual simplified method [BDM 6.6.4.2.1]
Bridge length: 218 feet < 250 feet …OK
Roadway width: 40 feet < 44 feet …OK
Skew: 15 degrees < 45 degrees …OK
Thermal expansion for steel substructure [AASHTO-LRFD 3.4.1, p3-11]:
(80/2)(12)(0.000006)(50)(1.0) = 0.144 inches < 0.45 inches …OK
Ground slope: 1:30 < 1:10 …OK

Choose pile shape [BDM Table 6.6.4.2.1.1]
Try HP 12x53 because H = 18 feet (> 16 feet for HP 10x57)

Determine number of piles [BDM Table 6.6.4.2.1.1]
$n = P_u/\varphi_c P_n$ = 1800/(0.7)(192) = 13.4, try 14 piles
Spacing = 3'- 0 3/4 > 2.50 feet …OK [spacing from H40-06 series sheet H40-48-06]

(2) Check HP 12x53 structural condition in the ground

Per pile, P_n = 224 kips [BDM Table 6.2.6.1-1]
For bent, $P_r = n\varphi_c P_n$ = (14)(0.6)(224) = 1881.6 kips > P_u = 1800 kips …OK

For determining contract length and driving target see the similar examples for steel pipe and prestressed concrete in Track 1, Examples 6 and 7 in LRFD Pile Design Examples ~ 2013.

Commentary Appendix for Technical Documents

CONTENTS

Pile bents with steel H-piles 1
Pile bents with prestressed concrete piles 15
Pile bents with concrete-filled steel pipe piles 22

Pile bents with steel H-piles ~ 22 June 2009

Contents

Summary 1
History 2
Issues 5
Analysis and design conditions for the revised general study 10
Revised general study of J-series and H-series pile bent piles 11
References 14

Summary

The original 1950s office computations for the H-piles on the P10A sheet (Standard Design Concrete and Steel Piles…for Use in Trestle Pile Bents – P10A) have been lost. In the 1990s it was believed that for the original computations fixity was assumed 6 feet below ground or streambed. Computations from the 1990s also assumed that pile heads were pinned, that K = 0.80, and that axial load was applied at an eccentricity of one inch. Those assumptions generally need to be updated.

Recent research has indicated that an H-pile with an embedment in the cap of 12 inches, the minimum on the P10A sheet, will be at least partially fixed. Larger embedments of 1.5 to 2.0 times the pile size result in nearly complete fixity.

Fixity of an HP-10 or HP-12 at 6 feet in soil is about the same as the results from the 1960s Davisson method, but the method is believed to be unconservative and no longer is permitted for final design in the AASHTO LRFD Specifications. The pile design method of choice now is the p-y method, which is programmed in LPILE (formerly COM624P). Based on runs of LPILE with H-piles in soft clay, the slenderness for column design, KL/r, should be based on $K \geq 0.90$ if the pile fixity is determined by the Davisson method. Thus those LPILE runs indicated that the Davisson method is unconservative with respect to the past office assumption.

Based on preliminary studies of piles with loads at a 2-inch eccentricity, a general study including runs of strip frames in STAAD and runs of LPILE (that determined adjustments for the Davisson method), and a revised general study, the following table for the P10L sheet was developed. For H-piles the service limit state (plan sheet bearing) load values remain the same as on the P10A sheet, but the permissible heights (H) are adjusted for more accurate column slenderness standards. With addition of HP-14 piles to the P10L sheet the nominal resistances will be sufficient for the pile bents for the J-series and H-series bridges and the present maximum heights on the P10A sheet. In some cases, reduced maximum heights on the P10L sheet will require larger H-pile sections for a pile bent.

Permissible heights, nominal resistances, and maximum plan sheet bearing for Grade 50 H-piles in pile bents

H-pile section	Maximum height, H (1), feet		Recommended minimum height, H (2), feet	Minimum soil penetration (3) feet	Nominal Resistance, P_n kips (4)	Max. plan sheet bearing, tons
	Monolithic cap	Non-monolithic cap				
HP 10x42	19	15	7	18	154	37
HP 10x57	19	16	7	18	208	50
HP 12x53	23	20	9	21	192	46
HP 14x73	28	25	13	24	265	64
HP 14x89	29	26	13	24	324	78

Table notes:

(1) H is defined as the height from underside of pile bent cap to ground line or stream bed (with scour, if applicable).

(2) As the pile becomes shorter it becomes stiffer and attracts more moment but has greater axial capacity. Consult with the supervising Unit Leader before using a lesser height.

(3) This distance from ground line or stream bed to bottom of pile is required for the pile to have a point of fixity. If the pile has less embedment it may fail by “fence-post” action.

(4) These nominal resistances are intended to be used with $\varphi_c = 0.70$. These values at Structural Resistance Level - 1 (SRL-1) were calculated from 1.45*6 ksi*A/0.7, which simplifies to 12.43*A (and then were converted to metric).

Since the P10A sheet was developed, AASHTO has added to the minimum pile spacing rule. The original minimum spacing of 2.5 feet now only is applicable for piles 12 inches or less in size. With the additional AASHTO 2.5D rule, for a 14-inch pile the minimum spacing is 2.92 feet. In some cases, the J-series and H-series pile spacings are less and therefore do not follow the AASHTO rule.

The AASHTO LRFD Specifications no longer specify minimum pile penetration: 10 feet in hard cohesive or dense granular material, 20 feet in soft cohesive or loose granular material, or one-third of the unsupported height (H) of a pile in a pile bent. In most cases, however, the minimum penetration in the table above is a more stringent limitation, unless the designer specially analyzes the pile.

History

A P10 sheet, dated 1953 and based on the 1949 AASHO Standard Specifications, predates the earliest P10A sheet in the archive of drawing files. The P10 sheet was intended for several continuous concrete slab (CCS), pretensioned prestressed concrete beam (PPCB), and rolled steel beam (RSB) standard plan bridges. The sheet shows four pile types and requires driving to full penetration but also to a minimum 30-ton capacity.

The first P10A sheet was issued in 1959 and had five trestle pile types (plus four foundation pile types) including the three on the present P10A sheet. Bearing values and maximum height (H) dimensions on the present sheet are the same as they were on the 1959 sheet. For P10A, H-piles the bearing value is based on 6 ksi, which was the limit for point bearing piles in the 1949 or 1957 AASHO Standard Specifications. At that time the usual steel specification was A7 with a minimum yield of 33 ksi.

In the 1949 and 1957 AASHO Standard Specifications, presumptive bearing values in tons for steel and concrete friction piles generally were set in tons at pile size in inches times two. Also in the 1957 AASHO Standard Specifications are the following:

- Piles shall be designed as structural columns [1.4.17].
- A Converse-Labarre formula is suggested for friction pile load reduction due to group effects [1.4.17]. (It does not appear that this rule was used for P10A piles.)
- Concrete piles shall be designed in accordance with article 1.4.11 (referenced from 1.4.17), which refers to 1.7.8 for columns, which generally follows the 1951 ACI Code.

- …steel piles in accordance with article 1.4.2 (referenced from 1.4.17), which gives rules, but which also permits use of Appendix B. Appendix B is required for compression members with known eccentricity. The rules for concentrically loaded columns with L/r not greater than 140 distinguish between riveted ends and pinned ends, having deductions from a basic stress for $(L/r)^2$ without accounting for sway or end effects. In Appendix B, the L is noted as being 75% of the total length with riveted connections and 87.5% of the total length for pinned connections. In 1.6.9 main compression members are limited to an unsupported length to radius of gyration ratio of 120.
- …concrete filled pipe piles in accordance with article 1.4.11 (referenced from 1.4.17), except that allowable unit stresses may be increased 20% provided the shell thickness is not less than ¼ inch. The area of the shell shall be included in determining the value of p, percentage of reinforcement. Where corrosion may be expected, 1/16 inch shall be deducted from the shell thickness….
- The allowable stresses of articles 1.4.2, 1.4.11, and 1.4.14 may be used in all cases where all of the stresses to which the piles may be subjected have been included. These stresses may be increased in accordance with article 1.4.1 (referenced from 1.4.17), which gives the various load groups and "percentages of unit stress" that are greater than 100% for load groups including wind, temperature, earthquake, and/or ice.
- For trestle piles…designed for dead load and live load only and where temperature, traction, water pressure and other forces are not considered, the allowable unit stresses…shall be decreased 20%. (This rule also was in the 1949 AASHO Standard Specifications and appeared in all specifications through 1977.)
- The 1957 AASHO Standard Specifications do not cover prestressed concrete because of rapid developments and lack of consensus [page XXIII]. Prestressed concrete was added to the 1961 AASHO Standard Specifications.
- The use of KL/r for steel compression members (including the effective length factor, K) first appeared in the 1977 AASHTO Standard Specifications.

Maximum height values on the P10A sheet favor larger piles at more than a simple ratio of radii of gyration. For example, the r_y ratio for HP 12x53 to HP 10x42 is 1.19, but the ratio of maximum H-values, 26/16 is 1.63. Assuming the piles are 6 feet longer to a fixed connection in the soil does not resolve the difference because 32/22 is 1.45. Obviously something other than a simple L/r ratio for axial compression was used to determine the height values on the original P10 or P10A sheets.

Recently there have been questions regarding design of the piles for eccentricity and design of the cap for a failed pile. In the mid-1990s notebooks from which the electronic manual was prepared is a 1968 handwritten pier design summary sheet that states the following for pile bent piers.

> Pile bent piers (P10A type) are to be designed for no horizontal load. Piles are assumed flexible in two directions. However, the Pec/I of eccentric vertical loads must be considered on outside piles. (The Pec/I referred to placing traffic lanes off center to determine the maximum pile loads.)

The last sentence is circled and noted "No. Use P/A all loads." Guidelines in the electronic manual had no provision for eccentric loads, and the present design manual generally follows the same direction with a statement that piles need not be checked for accidental eccentricity (intended to mean that field tolerances need not be considered).

An old design summary sheet headed "Iowa State Highway Commission Bridge Department" addressed to a design squad states the following as changes to previous practice:

1. Use impact in determining number of piles required. (per "Bridge Design Department Design Criteria for Piers.")
2. Use straight P/A for all vertical loads—do not account for any eccentricity.
3. Check pile cap reinforcing allowing for damage to piles and using operating stresses.
    a. End pile removed—check cap as cantilever.
    b. Interior pile removed—check cap as a restrained beam.

Undated (but with 1960 concrete placement diagrams) computations for H-12 and H-13 standard bridges show pile reactions computed using P/A + Pec/I for live loads in off-center lanes and identifies the procedure as "P.F. Barnard's method." Based on the various written sources there have been two procedures followed in the office for

determining live loads: (1) use P/A + Pec/I for eccentric lanes and (2) use P/A for maximum live load. The first procedure generally will give a slightly larger outer pile load, and that load then would be used for all piles.

To deal with potential eccentricity in individual columns due to tolerances, codes have taken various approaches, and those approaches do not appear to be in the 1949 or 1957 AASHO Standard Specifications.

Development of the AISC (steel) allowable stress specification included some provision for out-of-straightness in the allowable axial compression stress equation, but no minimum design eccentricity was specified. Many typical connections have measurable eccentricity that can be used in design.

The ACI (concrete) Building Code has dealt with the issue differently. In the 1963 and 1971 codes a minimum design eccentricity of 0.1 times the tied column dimension was required for strength design, perhaps for formwork tolerances. Later editions of the ACI Code eliminated the minimum eccentricity rule by simply topping-off the maximum column strength with a multiplier of 0.8 for tied columns. For evaluation of slenderness effects, editions of the code since 1977 have specified that a minimum end moment be used based on an eccentricity in inches of 0.6 + 0.03h.

For piles a minimum design eccentricity is dependent on the relatively large tolerance in pile placement. Except for prestressed concrete piles the Iowa DOT requires only that piles be placed within 3 inches of intended location at start of driving. In some cases, pile bent H-piles are flexed after driving to align relatively well at the cap, but some deviation from the correct location remains at the ground level. In other cases, H-piles are not flexed, and piles are 3 inches or more out of position at the cap.

The rules for design of the P10A cap for a failed pile (which follow a probably earlier document) were on the 1968 design summary sheet as follows:

- Check P10A cap for pile failure using operating stresses.
    - (a) End pile removed
    - (b) Interior pile removed.

These rules have been retained in the present Bridge Design Manual and are being included in the LRFD Bridge Design Manual with a specified load factor and the HL-93 load.

The P10A sheet requires 1’-0 pile embedment with dowels for monolithic caps and 1’-6 embedment without dowels for non-monolithic caps. For the continuous concrete slab (CCS) J-06-series the monolithic cap is dimensioned 1’-0 deep, and thus the pile embedment does not cause piles to project into the slab. For both J-06- and pretensioned prestressed concrete beam (PPCB) H-06-series, non-monolithic caps are dimensioned for a three-foot square cross section, which causes the piles to project to mid-height of the cap.

Original computations for 1960 H12 and H13 PPCB bridge standards by someone in the office show only dead, live, and impact loads being applied concentrically to pile bent piles. The plans refer to the P10A sheet and give pile bearing and number of H-piles based on 16-foot and 26-foot heights from stream bed to bottom of cap. These pile heights match the steel H-pile conditions on P10A but not the 13 and 22-foot maximum heights for steel pipe and prestressed concrete piles. Probably it was expected that the user of the standards would make appropriate choices that would not conflict with either the H-standards or sheet P10A.

In the mid-1990s Nucor-Yamato often rolled HP 12x53 piles with reduced area. About 1997 in the office John Harkin checked the piles for P10A conditions. He assumed encasement was non-structural, fixity at 6 feet below ground (presumed to be the original design condition), K = 0.8 for fixed base and braced, pinned head conditions, and design eccentricity of one inch about each axis. For battered piles he assumed the lateral component of load to be taken by the superstructure and assumed one inch eccentricity for the axial load. His computations indicated for full cross sections the following:

- 46 tons allowable at 26 feet for HP 12x53 (which matches the P10A sheet) and
- 37 tons allowable at 19 feet for HP 10x42.

The HP 10x42 height is 3 feet more than shown on the P10A sheet. For HP 12x53 piles with 6% section loss the permissible load at 26 feet was reduced to 43 tons.

The present office procedure guide contains the following examples:

- A Mathcad sheet for a CCS bridge that designs piles based on P/A, using strip live load extended over the entire roadway.
- A Mathcad sheet for a CCS bridge that assumes piles are fixed 6 feet below ground, one-inch eccentricity about both axes, K = 0.8, and P/A + Pec/I.
- Hand computations for a PPCB bridge that design piles for P/A + Mc/I assuming either two or three lanes are loaded, thereby considering eccentric traffic.

Issues

- **Limit states: For strip frame analysis for a J-series or H-series bridge** consider only the Strength I limit state. Strength III and V, which include wind, are not likely to control because the jointless superstructure acting as a wide horizontal beam will carry all except part of the substructure wind loads to the abutments. The superstructure also will carry braking forces to the abutments. Thus the loads in Strength I to consider are dead (DC and DW), live and dynamic load allowance (LL and IM), water (WA), and temperature (TU).

  Consider the Extreme Event limit state with respect to scour by considering pile length to scour elevation.

- **Loading:** Although office practice has been to neglect weight of individual pile encasement, the dead load of the encasement, especially for HP-14 piles, is large enough that it was included in the general study and should be included in future designs.

  Even though the pile cap is relatively rigid, individual H-06-series beam loads can cause the pile axial loads to vary plus or minus 20 to 25%, if the diaphragm at the bent between the beams is neglected. If the diaphragm is considered, the variation in axial loads will be less. The office practice of checking the cap for a missing interior or end pile ensures that the cap is adequate for reasonable variations in loads.

  Because pile bents are intended to be used with relatively small watersheds, water loads will be small. A water load on a tall pile generally will result in relatively small moments at the top of the pile where a strip frame analysis indicates the largest moment for a fixed-head pile. The revised general study considered a small water load indirectly by considering moment magnification as if a load between braced points existed.

  A one-inch temperature movement has relatively large effects on a 45-degree skewed non-monolithic pile bent. For the maximum H-06-series and J-06-series bridge lengths, the movement for a steel substructure designed by LRFD will be less than one-half inch.

  Moments caused by temperature movement can be estimated quickly and accurately using fixed end moment formulas for either a pinned top/fixed base or a fixed top/fixed base pile.

  Moments caused by dead, live, and impact loads cannot be estimated accurately by simple formulas. Reasonable office practice for typical bridges would be to estimate moments using a two-dimensional frame model including integral abutment piles, pile bent piles, and a superstructure strip of appropriate width and stiffness. Although the frame could be analyzed by moment distribution it can be analyzed more efficiently by STAAD or similar finite element software.

- **Pile head bracing**: Typical Iowa pile bent bridges have jointless decks and integral abutments. The horizontally rigid deck can convey support from abutments and wing walls to pile bents. Therefore, in completed bridges, piles are laterally braced at their heads, and loads transverse to the bridge are carried mostly by the superstructure acting as a deep horizontal beam.

  J-06- and H-06-series bridges are quite rigid in the horizontal plane. For a J24, 150-foot bridge, deflection under full wind load on superstructure and live load with supports only at abutments was computed as 0.017 inches at midspan of the center span. At pile bents, deflection will be smaller, and for wider bridges deflection will be smaller. For longer bridges, however, deflection will be greater. AASHTO-LRFD

4.5.3.2.2 allows neglecting sway moment magnification if $\Delta \leq l_u/1500$, which computes to 0.056 inches for a 7-foot pile height and 0.128 inches for a 16-foot pile height. These computations verify that pile heads can be considered braced.

During construction, after the cap is poured and cured, battered piles provide lateral support in the plane of the bent. Out-of-plane, however, the bent has no lateral support other than any construction bracing.

- **Fixity at tops of piles embedded in monolithic or non-monolithic caps:** The AASHTO LRFD Specifications [AASHTO LRFD 10.7.1.2] require an embedment of 12.0 inches minimum or a reduced embedment of 6.0 inches minimum with embedded dowel, bar, or strand attachment. The P10A sheet requires 12-inch embedment with dowels for piles in monolithic caps (J-06-series bridges) and 18-inch embedment without dowels for non-monolithic caps (J-06- or H-06-series bridges). The P10A sheet requirements exceed the AASHTO minimums.

  A group of researchers determined 61 to 83% fixity for one-diameter pile embedment [Castilla et al. 1984]. By computation, Tennessee engineers [Wasserman and Walker 1996] showed that a 12-inch embedment (1.2-diameter) of an HP 10x42 could develop the full, strong-axis plastic moment. Another group of researchers assumed 50% fixity for one-foot-embedment (1.2-diameter) of HP 10x42 piles [Hughes et al. 2007]. For full fixity at a pile cap, the Kansas design manual [KDOT 2007] recommends a minimum of 1.5-diameter embedment. In a literature review, researchers [Rollins and Stenlund 2008] reported that testing by others had determined an HP 10x42 embedded 12 inches (1.2-diameter) developed the full moment capacity of the pile about the weak axis but not about the strong axis. They also reported from other testing that an HP 14x89 embedded 5 inches (0.36-diameter) developed 25 to 66 percent of the ultimate moment capacity.

  Based on the various tests and studies conducted to date, the P10A connections for steel H-piles may be classified as partially fixed at the monolithic J-06-series cap and fully fixed to the J-06-series and H-06-series non-monolithic cap.

- **Fixity at non-monolithic cap to superstructure connection:** Possiel conducted tests of a prestressed beam to bent cap connection made with two elastomeric pads (similar to the H-06-series connection, except without the keyed-in diaphragm) and found that the connection resulted in partial fixity [Possiel 2008]. Based on this testing and analysis, the J-06- and H-06-series non-monolithic cap to superstructure connection, out-of-plane, may be classified as partially fixed. In the plane of the pile bent, where the full width of the superstructure is engaged, the connection should be considered fixed.

- **Fixity at bottoms of piles:** The AASHTO LRFD Specifications give an approximate method to determine point of pile fixity [AASHTO-LRFD 10.7.3.13.4] developed in the 1960s by Davisson. At this time the method is known to be unconservative to some [Wilson et al. 2005] but not to all [Kumar et al. 2007]. Although the method was permitted for final design in the 2nd Edition of the AASHTO LRFD Specifications, in the 3rd and 4th Editions the method is be used for preliminary design only.

  In developing a model for analysis of a pile subjected to seismic loads, Chai noted that the depth to fixity based on lateral deflection typically is on the range of three to six pile diameters [Chai 2002]. (The 6 feet used for HP-10 piles in the P10L revised general study is 7.2 diameters.) Chai also indicated that the actual maximum moment in the pile would develop above the depth to fixity.

  A more accurate point of fixity based on p-y analysis was developed for integral abutment piles [Greimann et al. 1987], and it was shown to vary for lateral load, moment, and buckling. The most recent method to estimate point of fixity and analyze driven piles is to use LPILE or comparable software that utilizes the p-y method.

  Russo also noted that the point of fixity will vary for different pile loading conditions but that a single "average point of fixity" works well for many different load conditions [Russo 1999].

With LPILE (previously COM624P), determining the point of fixity seems to be open to engineering judgment. In an integral abutment example, engineers at the Tennessee DOT took the location of first zero deflection below ground as the fixed point [Wasserman and Walker 1996], whereas for pile bents, engineers at the North Carolina DOT take the fixed point as either the maximum negative deflection or the maximum negative moment below ground [Possiel 2008].

The point of fixity will vary depending on the stiffness and head condition of a pile [Possiel 2008]. The location will be deeper for a stiffer pile. It will be deeper for a fully fixed pile head rather than a pinned head, but the depth will depend on whether it is determined as first zero deflection, maximum negative deflection, or maximum negative moment.

The point of fixity also will vary depending on the characteristics of the soil. For the general study, soils were assumed to have a minimum Standard Penetration Test $N \geq 3$ for cohesive soils and $N \geq 5$ for granular soils. These N-values correlate only approximately with general characterizations of soils [Teng 1962].

For the pile to have a point of fixity the pile must penetrate into the soil sufficiently so that there are at least two points of zero deflection below ground [Wang and Reese 1993]. If the pile does not penetrate far enough the bottom of the pile will deflect laterally in a “fence-posting” mode of behavior.

- **Buckling length and K-value**: Based on the P10A sheet, office practice has been to encase H-piles from the cap to 3 feet below ground or streambed. Because there is no positive shear connection this encasement is not considered to be composite with the column and has been neglected in office computations.

  However, construction of the encasement will initially disturb the upper 3 feet of soil. Considering the potential disturbance, for preliminary studies of buckling length the 3 feet was added to the depth to fixity determined by the Davisson method, which was reduced by one foot based on Alabama research [Hughes et al. 2007].

  For the revised general study the depth to fixity was simplified to neglect the effects of encasement. The soil disturbance during construction due to the encasement will increase the depth to fixity, but the effect of the disturbance will dissipate during service. Even though the encasement is not composite it will stiffen the pile and generally compensate for the increased depth to fixity.

  With an LPILE analysis the buckling length can be determined as the distance between points of zero moment, which represent inflection points [Wasserman and Walker 1996]. For a pinned-head pile this distance is from the pile head to the first point of zero moment on the pile below. For a fixed-head pile, one distance is between the first two points of zero moment on the pile [Wasserman and Walker 1996], but there also is a distance above the first point that should be doubled to make a full buckling curve. This upper distance seems to be recognized but incorrectly analyzed in the literature [Wang and Reese 1993] and is difficult to determine if the pile head is not held to a fully fixed head zero slope.

  When using the buckling lengths determined from LPILE, the K-values will be 1.0 because the lengths are for full buckling curves. When the lengths are related back to a pile modeled with a length set by superstructure and streambed or ground elevations, however, the Ks will vary.

  For the general study, after comparing buckling lengths determined using the Davisson method for point of fixity and LPILE, it appeared that establishing fixity with the Davisson method and using $K = 0.90$ for fixed head and $K = 0.95$ for pinned head piles approximated the results from LPILE. Because of the simplicity of the Davisson method it gave more consistent results than LPILE and, the Davisson method with the K-values above was used for the general study. However, the heights determined for the P10L sheet were conservative in some cases. To remove the conservatism for H-piles, in the revised general study specific K-values were determined from LPILE for each-pile size and for each axis, strong and weak.

  For primary steel members the AASHTO LRFD Specifications have a slenderness limit, KL/r, of 120 [AASHTO-LRFD 6.9.3], and this limit was followed in the general study.

- **Minimum pile spacing:** The AASHTO LRFD Specifications [AASHTO LRFD 10.7.1.2] require that piles be spaced center-to-center not less than 30.0 inches or 2.5 pile diameters, whichever is larger. (The two-part rule has been in the AASHTO Standard Specifications since the late 1980s or early 1990s.) Based on width, for 14-inch H-piles the minimum spacing is 35 inches or 2.92 feet. For J24-06 series bridges 120 feet or more in length and skewed 15 degrees or less, pile bent piles are spaced too close to meet the minimum spacing requirements for a 14-inch H-pile. For H40-06 series bridges piles are spaced adequately.

- **Eccentricity:** Although the Iowa DOT Standard Specifications allow a pile to be placed for driving up to 3 inches from its intended location, piles generally are driven plumb and are unlikely to lean unless driven past boulders or other obstructions. Contractors generally do not use templates for pile positioning unless placement is more important than usual, such as for a precast cap or wall encasement. H-piles may be flexed into cap alignment or may be up to 3 inches or more from their intended head locations. Construction staff generally does not permit bending sufficient to yield piles [Kyle Frame, 12 May 2008].

  Generally there are no requirements for minimum eccentricity for steel H-piles, although some office computations have adopted arbitrary values or values from the ACI Code for concrete.

  Various experiments with pile bents analyzed by STAAD have shown little effect of eccentricity when piles are connected with the usual concrete cap. Because of pile cap stiffness and continuity, misplacing a pile 2 inches along the cap will have little effect on pile loads. Misplacing a pile 2 inches transverse to the cap will cause all piles for a 24-foot roadway bridge to share the eccentric moment approximately equally.

- **Battered piles: Present office practice is to** assume that increase in axial load in battered piles may be neglected. Several preliminary pile bent STAAD runs indicated that the axial load increase would be in the 3% to 9% range.

- **Scour:** Even though pile bents are to be used only for sites with small streams and limited drainage area, some sites may be subjected to significant scour. In those cases the designer should consider the stream bed to be at the maximum scour elevation and choose a pile size and shape for the increased height (H).

- **Pile penetration:** The 2nd Edition of the AASHTO LRFD Specifications required that piles penetrate a minimum of 10 feet in hard cohesive or dense granular material and 20 feet in soft cohesive or loose granular material and that piles for trestle bents penetrate a minimum of one-third of the unsupported length [AASHTO-LRFD 2nd Edition 10.7.1.2]. These minimums do not appear in the 3rd or 4th Editions. They also do not account for minimum penetration required for a point of fixity with p-y analysis. The minimum penetration for fixity was determined in the general study and is given in the P10L table.

- **Frame moments:** Because of the partial or full fixity at the pile head to superstructure connection, a steel H-pile will be subjected to moment in the plane parallel with centerline of roadway. If the bridge has no skew the moment will be about one axis of the pile, but if the bridge is skewed the moment will be about both axes because the piles will be skewed with webs parallel with the pile bent cap. Generally the moment from the superstructure (which will be maximum at the top of the pile) is considerably larger than the moment due to temperature movement (which will be approximately equal at the top and bottom of the pile) or water loads. Therefore, the pile head moment(s) will be the controlling moment condition.

  The amount of moment applied to the pile depends on the relative stiffnesses of the pile and superstructure. Generally the pile is more flexible than the superstructure and thus is subjected to relatively small moments. However, if the height of the pile above ground is relatively small, the pile will be stiffer and will attract more moment. For the general study, the minimum ground to cap height was set at 7 feet to check the stiffer pile condition.

  Moments from the superstructure need to be determined from a frame analysis, but moments from temperature movement and water loads can be estimated accurately from standard formulas.

- **Analysis observations:** A simple two-dimensional strip frame analysis in STAAD appears to be conservative for a skewed structure analyzed by grid analysis in STAAD.

  An LPILE analysis will be different from a Davisson analysis [AASHTO-LRFD 10.7.3.13.4]. For typical cases LPILE will show a similar depth to fixity but larger buckling lengths.

- **Design and analysis assumptions in other states:** Alabama researchers [Hughes et al. 2007] who investigated pile bent buckling assumed jointed superstructures but longitudinal lateral support would exist if small amounts of sway caused joints to close. One-foot pile embedment in the cap was considered as 50% fixity (which is appropriate based on earlier research [Castilla et al. 1984]). With 50% fixity at the cap and the pile fixed below ground, K could be estimated as 0.577, but the researchers considered this case to be unconservative. Except for very poor soil conditions, a subgrade modulus less than 5 lb/in^3, HP 10x42 piles were assumed to be fixed 5 feet below ground. An alternate assumption of 50% fixity at the cap and 50% fixity at the ground line (with the reduced column length) leads to a K of 0.707.

  In the past North Carolina used stringent design criteria for design of pile bents: K = 2.1 and 1-inch maximum lateral deflection under lateral load [Robinson et al. 2006]. These criteria were necessary because pile bents were used with jointed superstructures; the sections of the superstructure could not be expected to provide lateral bracing or to transfer horizontal loads to abutments.

  The Illinois design manual [IDOT 2006] indicates a one-foot pile embedment. In the longitudinal direction piles are assumed to be cantilevers. In the transverse direction piles may be modeled as cantilevers or as a pile-cap frame

- **Design procedures from other states: (Determining preliminary configuration of the pile bent and the magnitudes of loads is common to all procedures.)**

  North Carolina:
  (1) Evaluate soil conditions.
  (2) Run LPILE to determine point of fixity at maximum negative moment or maximum negative deflection.
  (3) Analyze structure as a frame with piles fixed at point of fixity.
  (4) Design piles [Possiel 2008].

  Louisiana Simplified LRFD for small, non-critical projects:
  (1) Determine point of fixity as 5 feet below ground or scour line (Scour is a minimum of 5 feet.).
  (2) Check slenderness limit, $L/d \leq 20$
  (3) Use tabulated axial compressive resistance to design piles [Bridge Design Section 2008].

  This method was checked for an expansion bent with various LRFD load combinations and found to be adequate for wind loads not exceeding 55 mph [Ferdous 2007]. For H-piles the method permits the following.

Louisiana simplified LRFD method

Pile shape	Maximum factored live plus dead load, P_u, kips	Maximum height (H), feet
HP 10x42	170 – 230	11.67
HP 10x57	230 – 300	11.67
HP 14x73	290 – 380	18.33
HP 14x89	360 - 470	18.33

(This simplified method permits greater load but less height than the P10A sheet.)

Louisiana Detailed LRFD:

(1) Determine point of fixity using Davisson method [AASHTO LRFD 10.7.3.13.4].
(2) Model superstructure in STAAD, and determine pile loads.
(3) Use LPILE to determine point of fixity based on loads.
(4) Revise STAAD model for second point of fixity.
(5) Design piles [Bridge Design Section 2008].

Analysis and design criteria for the revised general study of pile bents, on which the Bridge Design Manual simplified method is based

Pile head

- Monolithic cap, 12-inch pile embedment
  - Assume partial fixity at bottom of cap for x-axis and y-axis.
  - Apply 50% of moments from STAAD strip frame for M_{ux} and M_{uy}.
  - Apply strip frame factored axial loads, which usually will be less than full factored pile axial load, P_u (A*6*1.45).
- Non-monolithic cap, 18-inch pile embedment
  - Assume full fixity at bottom of cap for x-axis.
  - Assume partial fixity at top of cap for y-axis.
  - Apply full moment from STAAD strip frame for M_{ux}.
  - Apply 50% of moment from STAAD strip frame for M_{uy}.
  - Apply strip frame axial factored loads, which usually will be less than full factored pile axial load, P_u.

Pile toe

- Determine location of fixity by Davisson method neglecting encasement.
  - Consider y-axis only.
  - Use average depth to fixity for loose sand ($N \approx 5$) and soft clay ($N \approx 3$) and round to nearest foot. (For HP-10, use 6 feet; for HP-12, use 7 feet; and for HP-14, use 8 feet.)

Buckling length (KL)

- Use LPILE for soft clay (c = 2.6 psi, unit weight = 0.0666 pci, E_{50} = 0.02).
- For fixed head pile, take KL = 2 times the distance from pile head to first inflection point or the distance between the first two inflection points, whichever controls.
- For pinned head pile, take KL = distance from pile head to first inflection point. LPILE generally indicates a decreasing KL as the axial load increases to the buckling load. For checking slenderness and pile resistance at the strength limit state, use the KL at the buckling load.
- For partially fixed head pile, take KL = average of fixed head and pinned head KLs.

Strip frame analysis, factored loads with STAAD PDELTA analysis

- Modeling
  - Locate the superstructure strip member at the centroid of the superstructure. Use a concrete member to model the depth of the superstructure at each abutment and pile bent cap.

    - Assume the superstructure strip is supported at each abutment by one HP of most appropriate stiffness for the strip width, oriented for weak axis bending in a prebored hole. (Usually this will be an HP 10x42.)
- J-series
    - Take strip width as distance between pile bent piles, perpendicular to centerline of roadway.
    - Take live load and dynamic load allowance spread over a 10-foot width. Proportion that load for the strip width based on pile spacing.
    - Neglect any load increase at wheel lines, and neglect any multiple presence factor.
- H-series
    - Take strip width as distance between pile bent piles, perpendicular to centerline of roadway.
    - Take live load and dynamic load allowance spread over a 10-foot width. Proportion that load for the strip width based on pile spacing.
    - Proportion stiffness of composite beam and deck to the strip width based on pile spacing.
    - Neglect any load increase for a beam bearing directly over a pile, and neglect any multiple presence factor.

Strength I loads (Other strength limit states will not control.)

- Consider DC, DW, LL, and IM with usual load factors.
- Consider TU with load factor of one for H-piles and pipe piles, which is equivalent to a concrete superstructure with 50-degree expansion or contraction. This is according to the text of AASHTO LRFD 3.4.1, p3-11 for steel substructures.
- Neglect WA load that will give a small moment for the x-axis at the pile head, but indirectly consider the load with C_m for moment magnification. (Assume use of full encasement for deep streams or streams with high velocity.)
- Neglect BR load. Assume the jointless superstructure transmits BR loads directly to abutments.

Design checks

- Check KL/r < 120 for main members.
- For beam-column checks use braced frame moment magnification. Use C_m for lateral loads between brace points permissible under the 2005 AISC Specification (assuming some small WA uniform load on pile). This C_m reduction is not permitted by the AASHTO-LRFD Specifications [4.5.3.2.2b]. Using the AISC C_m is a compromise between completely neglecting any lateral load, in which case there would be very little, if any, moment magnification, and taking $C_m = 1.0$.
- Check critical P_u, M_{ux}, and M_{uy} beam-column combinations from strip analysis.
- For comparison only, apply full factored pile axial load, P_u (6 ksi on area with 1.45 load factor) with largest strip frame moments.
- For comparison only, apply full factored load, P_u, with 2-inch eccentricity about each axis and using $K_x = K_y = 0.8$. (This will be similar to John Harkin's P10A pile analysis.)

Revised general study of J-series and H-series pile bent piles

With the criteria above, the following table was developed with proposed pile heights. For comparison the table also shows the pile heights from the P10A sheet and the initial P10L sheet.

H-pile	**Bearing, tons (P_u, kips)**	**H-dimension, feet**		**Proposed H-dimension, feet**	
		P10A	**P10L**	**Monolithic cap** (1)	**Non-monolithic cap** (1)
HP 10x42	37 (107.88)	16	13	19	15
HP 10x57	50 (146.16)	16	14	19	16 (2) [1.06+]
HP 12x 53	46 (133.85)	26	18	23	20 (2) [1.05+]
HP 14x73	64 (186.18)	---	25	28 (3)	25 (2, 3) [1.00+]
HP 14x89	78 (227.07)	---	26	29 (3)	26 (2, 3) [1.02+]

Table notes:

(1) Much of the difference between the H-values for the different caps is due to the use of a soft joint above the 3-foot deep non-monolithic cap.

(2) These H-dimensions will exceed a beam-column check by up to 7% as indicated by the combined force and moment ratio in brackets if the full P_u is used with the maximum factored moments from a strip analysis for a maximum length bridge. This condition did not occur in the strip analyses investigated and is for comparison only.

(3) HP-14 piles are not proposed for greater heights because of the K_y determined specifically for each pile in the revised general study. For the general study the K_y was determined from an average of several pile shapes.

Comments

- For the new (2009) J24-series bridges the required bearing (with dynamic load allowance) varies from 32 to 42 tons (P_u = 92.8 to 121.8 kips). Pile bent loads for the new J24-series will require load capacity of HP 10x42 to 130-foot bridge length and HP 12x53 to 150-foot length. Larger piles may be required based on height.

- For the old (2006) H24-series the required bearing (with dynamic load allowance) varies from 40 to 50 tons (P_u = 116.00 to 145.00 kips). Pile bent loads for the old H24-series will require HP 12x53 to HP 10x57 depending on bridge length and number of piles in the bent. Larger piles may be required based on height.

Bridge Design Manual table

Permissible heights, nominal resistances, and maximum plan sheet bearing for Grade 50 H-piles in pile bents

H-pile section	Maximum height, H (1), feet		Recommended minimum height, H (2), feet	Minimum soil penetration (3) feet	Nominal Resistance, P_n kips (4)	Max. plan sheet bearing, ton
	Monolithic cap	Non-monolithic cap				
HP 10x42	19	15	7	18	154	37
HP 10x57	19	16	7	18	208	50
HP 12x53	23	20	9	21	192	46
HP 14x73	28	25	13	24	265	64
HP 14x89	29	26	13	24	324	78

Table notes:

(1) H is measured from bottom of cap.

(2) As the pile becomes shorter it becomes stiffer and attracts more moment but has greater axial capacity. Consult with the supervising Unit Leader before using a lesser height.

(3) These values ensure that a pile is sufficiently long so as to have a point of fixity. They were determined for the Davisson method [AISC 1986] and then checked with LPILE runs [Wang and Reese 1993]. In very few cases will LPILE require a greater penetration. If penetration is less than the table minimum it may be subject to "fence-posting", and the pile requires special analysis.

(4) These nominal resistances are intended to be used with $\varphi_c = 0.70$. These values at Structural Resistance Level - 1 (SRL-1) were calculated from 1.45*6 ksi*A/0.7, which simplifies to 12.43*A.

Construction

J-series bridges are constructed with falsework and, therefore, construction loading of pile bent piles will be minimal. For H-series bridges, however, construction loading may be significant.

During the general study two construction cases for an HP 10x57 in an H-series bridge were checked: (1) cap pour and (2) C-beam placement. Reduced K-values considering the encasement were used at both stages but, even with the reduced K-values, the pile did not meet the AASHTO $KL/r \leq 120$ limit for primary members. For the construction stage the limit presumably does not apply.

At the cap pour stage, a maximum permissible height HP 10x57 at maximum H40 pile spacing, with no bracing, and with one-inch eccentricities and moment magnification, resulted in a combined axial compression and flexure ratio less than 0.400. The ratio is low enough that other pile shapes for H-series bridges also should be adequate.

For the beam placement, the condition was taken as an H-series 243-foot bridge, C-beam placement at 0-degree skew to maximize y-axis moment, maximum permissible height HP 10x57, maximum pile spacing, and no y-axis bracing. The combined axial compression and flexure ratio was less than 0.600 with reduced K_y for encasement and, for comparison only, less than 1.100 with $K_y = 2.1$. The ratio with encasement is low enough that other pile shapes also should be adequate.

References

AISC Marketing, Inc. (1986) *Highway Structures Design Handbook, Volume I.* AISC Marketing, Inc., Pittsburgh, PA.

Arcelor Mittal. (2008) *Piling Handbook, 8th Edition.* Arcelor Mittal, West Midlands, UK.

Bridge Design Section. (2008) *LRFD Bridge Design Manual.* State of Louisiana, Dept. of Transportation and Development, Baton Rouge, LA.

Castilla, F., P. Martin, and J. Link. (1984) *Fixity of Members Embedded in Concrete, Final Report.* Construction Engineering Research Lab, Champaign, Illinois.

Chai, Y.H. (2002) "Flexural strength and ductility of extended pile-shafts I: analytical model." *Journal of Structural Engineering*, Vol. 128, No. 5, pp 586-594.

Ferdous, M.R. (2007) *Pile Capacity Utilization for Bridge Bents Designed Using Simplified Procedures.* M.S. Thesis, Louisiana State University, Baton Rouge, LA.

Greimann, L.G., R.E. Abendroth, D.E. Johnson, and P.B. Ebner. (1987) *Pile Design and Tests for Integral Abutment Bridges, Final Report, HR-273.* Department of Civil Engineering, Iowa State University, Ames, IA.

Hughes, D., G.E. Ramey, and M.L. Hughes. (2007) "Effects of Extreme Scour and Soil Subgrade Modulus on Bridge Pile Bent Buckling." *Practice Periodical on Structural Design and Construction*, 12(2), 96-108.

Illinois Department of Transportation (IDOT). (2006) *Bridge Manual.*

Kansas Department of Transportation (KDOT). (2007) *Design Manual, Volume III US, Version 6/07.*

Kumar, P.S., R.R. Giridhar, and P. Parameswaran. (2007) "Buckling Behavior of Axially Loaded Partially Embedded Concrete Piles in Sand." *Electronic Journal of Geotechnical Engineering,* Paper 2007-0725, 11 pages.

Possiel, B.A. (2008) *Point of Fixity Analysis of Laterally Loaded Bridge Bents.* M.S. Thesis, North Carolina State University, Raleigh, NC.

Rollins, K.M. and T.E. Stenlund. (2008) *Laterally Loaded Pile Cap Connections.* Department of Civil and Environmental Engineers, Brigham Young University, Provo, UT.

Russo, F.M. (1999) "Methods of analysis of multi-column frame piers with drilled shaft foundations." Office of Bridges and Structures, Iowa DOT, Ames, IA.

Teng, W.C. (1962) *Foundation Design,* Prentice-Hall Inc., Englewood Cliffs, New Jersey.

Wang, S-T. and L.C. Reese. (1993) *COM624P—Laterally Loaded Pile Analysis Program for the Microcomputer, Version 2.0.* Federal Highway Administration, Washington, DC.

Wasserman, E.P. and J.H. Walker. (1996) "Integral Abutments for Steel Bridges." *Highway Structures Design Handbook, Vol. II, Chap. 5.* American Iron and Steel Institute, Washington, DC.

Wilson, K.E., R.E. Kimmerling, G.C. Goble, P.J. Sabatini, S.D. Zang, J Y. Zhou, W.A. Amrhein, J, W. Boucher, and L.J. Danaovich. (2005) *LRFD for Highway Bridge Substructures and Earth Retaining Structures Reference Manual.* National Highway Institute, Arlington, VA.

Pile bents with prestressed concrete piles ~ 17 December 2008

Contents

Summary 15
History 16
Issues 16
Analysis and design conditions for the general study 19
General study of J-06-series and H-06-series pile bent piles 19
References 21

Summary

For J-06-series, H-06-series, and similar bridges the present allowable P10A loads for 14-inch and 16-inch prestressed concrete piles, 33 tons and 38 tons, may be extrapolated to the strength level using the average load factor 1.45 and compression phi factor 0.75. The nominal axial resistance for a 14-inch pile thus would be 127 kips, and the nominal resistance for a 16-inch pile would be 146 kips.

The respective maximum heights (H) would be 18 feet and 22 feet, an increase in height for the 14-inch pile. Generally it would be advisable not to use heights (H) less than 7 feet, especially if soils near the surface are relatively stiff.

Permissible heights (H), nominal resistances, and maximum plan sheet bearings for prestressed concrete piles in pile bents

Square pile size, inches	Maximum height, H, feet	Recommended minimum height, H, feet	Minimum soil penetration feet (2)	Nominal Resistance, P_n kips	Max. plan sheet bearing, tons
14	18	7	24	127	33
16	22	7	27	146	38

Table notes:

(1) $\varphi_c = 0.75$

(2) These values ensure that pile is sufficiently long so as to have a point of fixity. They were determined for the Davisson method [AISC 1986] but then reduced based on LPILE runs [Wang and Reese 1993]. In very few cases will LPILE require a greater penetration. If penetration is less than the table minimum, pile requires special analysis.

These nominal resistances are sufficient for all H-06-series bridges but not for all J-06-series bridges.

Since the P10A sheet was developed AASHTO has added to the minimum pile spacing rule. The original minimum spacing of 2.5 feet now only is applicable for piles 12 inches or less in size. With the additional 2.5D rule, for a 14-inch pile the minimum spacing is 2.92 feet, and for a 16-inch pile is 3.33 feet. In some cases the J-06-series and H-06-series pile spacings are less and violate the AASHTO rule.

The AASHTO LRFD Specifications no longer specify minimum pile penetration: 10 feet in hard cohesive or dense granular material, 20 feet in soft cohesive or loose granular material, or one-third of the unsupported height (H) of a pile in a pile bent. In most cases, however, the minimum penetration in the table above will control, unless the designer specially analyzes the pile.

History

The first P10A sheet was issued in 1959 and had five trestle pile types (plus four foundation pile types) including the three on the present P10A sheet. Bearing values and maximum height (H) dimensions on the present sheet are the same as they were on the 1959 sheet. For the prestressed concrete pile type the initial prestress on the present sheet has been increased slightly from the 1959 sheet, from 168 kips to 174 kips for the 14-inch pile and from 227 kips to 231 kips for the 16-inch pile.

Although no office records exist with respect to the loads and heights permitted for the prestressed concrete piles on the P10A sheet, the allowable loads seem to follow the pattern of side dimensions: 33/38 = 0.87 and 14/16 = 0.88. The allowable heights (with an assumed depth to fixity of 6 feet based on past office practice), however, do not follow a simple L/D ratio: (13+6)/1.1667 = 16.3 for the 14-inch pile and (22+6)/1.3333 = 21.0 for the 16-inch pile. The ratio for the 16-inch pile is considerably less conservative than the ratio for the 14-inch pile.

Prestressed concrete pile computations, evidently by someone in the office and with a memo dated 4 December 1990, indicate that the allowable load equation for axial compression was recommended for $h'/r \leq 60$ [PCI 1993]. Using the h'/r limit, the maximum unbraced lengths for use of the equation would be 20.2 feet for 14-inch piles and 23.1 feet for 16-inch piles. Considering a pile braced and hinged at the top and fixed at 6 feet below ground (for "scour and mud" as assumed in the computations), the K could be taken as 0.8, and the permissible "H" for the equation would be 19.2 feet and 22.9 feet for the 14-inch and 16-inch piles, respectively. These "H" values compare with 13 feet and 22 feet on the P10A sheet.

In the office pile computations, minimum eccentricity was taken as (0.6 + 0.03h), a value for compression members in the ACI Code, which gives 1.02 inches for 14-inch piles and 1.08 inches for 16-inch piles. This eccentricity is greater than the recommended minimum value for piles in the 6th Edition of the *PCI Design Handbook* [PCI 2004], e = 0.05d, which is 0.7 inches for 14-inch piles and 0.8 inches for 16-inch piles.

Overall, the computations showed that the piles were more than adequate for moments caused by minimum eccentricity at the 33-ton and 38-ton allowable loads shown on the P10A sheet for 14-inch and 16-inch piles, respectively. The computations had no indication of how the depth to fixity and how the assumption of pinned head were determined.

Issues

- **Loading and pile head bracing:** See "Pile bents with steel H-piles."

- **Fixity at tops of piles embedded in monolithic or non-monolithic caps:** The AASHTO LRFD Specifications [AASHTO LRFD 10.7.1.2] require an embedment of 12.0 minimum or a reduced embedment of 6.0 minimum with embedded dowel, bar, or strand attachment. The P10A sheet requires 12-inch embedment with dowels for piles in monolithic caps (J-06-series bridges) and 18-inch embedment without dowels for non-monolithic caps (J-06- or H-06-series bridges). The P10A sheet requirements exceed the AASHTO minimums.

  Various studies of prestressed concrete piles have indicated that a pile head with only 3-inch embedment and some reinforcing will perform as a partially fixed connection, not as a pinned connection as had been assumed by some states [Rollins and Stenlund 2008]. A greater embedment will cause greater fixity [Mokwa and Duncan 2003], and embedment equal to the pile size, with a 12-inch minimum, can result in a connection equal to the strength of the pile [Harries and Petrou 2001]. An earlier PCI document [PCI 1993] stated: "A pile fixed to a cap must be adequately reinforced with dowels…in order to resist bending moment."

  Based on the various tests and studies conducted to date, the P10A connections for prestressed concrete piles may be classified as partially fixed at the monolithic J-06-series cap and fully fixed to the J-06-series and H-06-series non-monolithic cap.

- **Fixity at non-monolithic cap to superstructure connection:** Possiel conducted tests of a prestressed beam to bent cap connection made with two elastomeric pads (similar to the H-06-series connection, except without the keyed-in diaphragm) and found that the connection resulted in partial fixity [Possiel 2008].

  Based on this testing and analysis, the J-06- and H-06-series non-monolithic cap to superstructure connection, out-of-plane, may be classified as partially fixed. In the plane of the pile bent, where the full width of the superstructure is engaged, the connection should be considered fixed.

- **Fixity at bottoms of piles:** The AASHTO LRFD Specifications give an approximate method to determine point of pile fixity [AASHTO-LRFD 10.7.3.13.4] developed in the 1960s by Davisson. At this time the method is known to be unconservative to some [Wilson et al. 2005] but not to all [Kumar et al. 2007]. Although the method was permitted for final design in the 2nd Edition of the AASHTO LRFD Specifications, in the 3rd and 4th Editions the method is to be used for preliminary design only. A more accurate point of fixity based on p-y analysis was developed for integral abutment piles [Greimann et al. 1987], and it was shown to vary for lateral load, moment, and buckling. The most recent method to estimate point of fixity and analyze driven piles is to use LPILE or comparable software that utilizes the p-y method.

  With LPILE (previously COM624P), determining the point of fixity seems to be open to engineering judgment. In an integral abutment example, engineers at the Tennessee DOT took the location of first zero deflection below ground as the fixed point [Wasserman and Walker 1996], whereas for pile bents, engineers at the North Carolina DOT take the fixed point as either the maximum negative deflection or the maximum negative moment below ground [Possiel 2008]. The assumptions associated with negative deflection or negative moment seem to have more validity.

  The point of fixity will vary depending on the stiffness and pinned, partially fixed, or fully fixed head condition of a pile [Possiel 2008]. The location will be deeper for a stiffer pile. It usually will be deeper for a fully fixed pile head, but the depth will depend on whether it is determined as first zero deflection, maximum negative deflection, or maximum negative moment.

  For the pile to have a point of fixity the pile must penetrate into the soil sufficiently so that there are at least two points of zero deflection below ground [Wang and Reese 1993]. If the pile does not penetrate far enough the bottom of the pile will deflect laterally in a “fence-posting” mode of behavior.

- **Buckling length and K-value:** With LPILE the buckling length can be determined as the distance between points of zero moment [Wasserman and Walker 1996]. For a pinned-head pile this distance is from the pile head to the first point of zero moment on the pile below. For a fixed-head pile, one distance is between the first two points of zero moment on the pile [Wasserman and Walker 1996], but there also is a distance above the first point that should be doubled to make a full buckling curve. This upper distance seems to be recognized but incorrectly analyzed in the literature [Wang and Reese 1993] and is difficult to determine if the pile head is not held to a fully fixed head zero slope, which gives a warning in LPILE. When using the buckling lengths determined from LPILE, the K-value should be taken as 1.0 because the lengths are for the full buckling curve.

  The AASHTO LRFD Specifications limit the K value to 1.0 for concrete members braced against sidesway unless analysis shows that a lower value may be used [AASHTO-LRFD 5.7.4.3].

  After comparing buckling lengths determined using the Davisson method for point of fixity and LPILE, it appears that establishing fixity with the Davisson method and using K = 1.0 usually will approximate the results from LPILE. Because of the simplicity of the Davisson method it gives more consistent results than LPILE and, for a general study, the Davisson method with K = 1.0 is more convenient.

- **Minimum pile spacing:** The AASHTO LRFD Specifications [AASHTO LRFD 10.7.1.2] require that piles be spaced center-to-center not less than 30.0 inches or 2.5 pile diameters, whichever is larger. (The two-part rule has been in the AASHTO Standard Specifications since the late 1980s or early 1990s.) Based on width, for 14-inch piles the minimum spacing is 35 inches or 2.92 feet, and for 16-inch piles is 40 inches or

3.33 feet. For J24 series bridges 120 feet or more in length and skewed 30 degrees or less, pile bent piles are spaced too close to meet the minimum spacing requirements for one or both prestressed pile sizes. For H40 series bridges piles are spaced too close for some of the bridges 163.83 feet long and greater, depending on skew.

- **Eccentricity:** PCI recommends that piles loaded in compression be designed for a minimum eccentricity of 0.05 times the pile diameter or width [PCI 2004]. For 14-inch and 16-inch piles the minimum eccentricities are 0.7 inches and 0.8 inches, respectively. An earlier PCI document [PCI 1993] assumed an eccentricity of 0.1 times the pile diameter or width, without comment. The 1963 and 1971 ACI Codes required minimum eccentricities of 0.05 and 0.10 for spiral and tied columns, respectively, as a means to reduce maximum design strength. More recent ACI Codes use factors of 0.85 and 0.80 to limit design strength.

  The Iowa DOT Standard Specifications allow a pile head location tolerance of 4 inches for prestressed concrete piles [IDOT SS 2501.15]. Investigations of misplacement of H-piles have indicated that there is less effect of misplacement than expected because the very rigid cap distributes the effects of eccentricity to adjacent piles.

- **Battered piles:** Assume that increase in axial load in battered piles may be neglected. This assumption follows present office practice.

- **Scour:** Because pile bents are to be used only for sites with small streams and limited drainage area, some sites may be subjected to minor scour. In those cases the designer may simply consider the ground line to be at the maximum scour and choose a pile size for the increased height (H).

- **Pile penetration:** The 2nd Edition of the AASHTO LRFD Specifications required that piles penetrate a minimum of 10 feet in hard cohesive or dense granular material and 20 feet in soft cohesive or loose granular material and that piles for trestle bents penetrate a minimum of one-third of the unsupported length [AASHTO-LRFD 2nd Edition 10.7.1.2]. These minimums do not appear in the 3rd or 4th Editions. They also do not account for minimum penetration required for p-y analysis.

- **Frame moments:** Because of the partial or full fixity at the pile head to superstructure connection, prestressed concrete piles will be subjected to moment in the plane parallel with centerline of roadway. If the bridge has no skew the moment will be about one axis of the pile, but if the bridge is skewed the moment will be about both axes. Generally the moment from the superstructure is considerably larger than the moment due to temperature movement or water loads. Therefore, the pile head moment(s) will be the controlling moment condition.

  The amount of moment applied to the pile depends on the relative stiffnesses of the pile and superstructure. Generally the pile is more flexible than the superstructure and thus is subjected to relatively small moments. However, if the height of the pile above ground is relatively small, the pile will be stiffer and will attract more moment. For the general study, the minimum ground to cap height was set at 7 feet to check the stiffer pile condition.

  Moments from the superstructure need to be determined from a frame analysis, but moments from temperature movement and water loads can be estimated accurately from standard formulas.

- **Design procedures from other states: (Determining preliminary configuration of the pile bent and the magnitudes of loads is common to all procedures.)**

  North Carolina: (1) Evaluate soil conditions; (2) Run LPILE to determine point of fixity at maximum negative moment or maximum negative deflection; (3) Analyze structure as a frame with piles fixed at point of fixity; (4) Design piles [Possiel 2008].

  Louisiana Simplified LRFD for small, non-critical projects: (1) Determine point of fixity as 5 feet below ground or scour line (Scour is a minimum of 5 feet.); (2) Check slenderness limit, $L/d \leq 20$; (3) Use

tabulated axial compressive resistance to design piles [Bridge Design Section 2008]. This method was checked for an expansion bent with various LRFD load combinations and found to be adequate for wind loads not exceeding 55 mph [Ferdous 2007]. If this method were used for a 14-inch prestressed concrete pile, the maximum height above ground would be 18.33 feet with a maximum factored dead plus live load of 110 to 170 kips. For a 16-inch pile, the maximum height would be 21.67 feet with a maximum factored dead plus live load of 140 to 200 kips. (This method is generally less conservative than the P10A sheet.)

Louisiana Detailed LRFD: (1) Determine point of fixity using Davisson method [AASHTO LRFD 10.7.3.13.4]; (2) Model superstructure in STAAD, and determine pile loads; (3) Use LPILE to determine point of fixity based on loads; (4) Revise STAAD model for second point of fixity; (5) Design piles [Bridge Design Section 2008].

Analysis and design conditions for the general study of pile bents, on which the design manual simplified method is based, with notes for design of special bridges

- Consider only the Strength I limit state. Strength III and V, which include wind, are not likely to control because the jointless superstructure acting as a wide horizontal beam will carry all except part of the substructure wind loads to the abutments. The superstructure also will carry braking forces to the abutments. Thus the loads in Strength I to consider are dead (DC and DW), live and dynamic load allowance (LL and IM), temperature (TU), and water (WA).
- A typical water load results in a very small moment at the pile head where the overall moment is maximum. For a general study, neglect the water load.
  Note: For checking a specific bridge, include the water load if applicable.
- Consider a pile placed at zero-degree skew and at 45-degree skew. These two cases are at the extremes of pile placement. At 45-degree skew, two-dimensional bridge frame analysis has shown the pile-head moments about each of the two axes to be $M_{z,\ \text{zero skew}}$*cos 45. Biaxial bending checks using the Bresler reciprocal load method are required [AASHTO-LRFD 5.7.4.5].
- For monolithic caps, the embedment is less than the pile size; therefore, consider the pile head to be 50% fixed. Analyze as if the pile head were fixed, and use 50% of the moment.
- For non-monolithic caps, the embedment is greater than the pile size; therefore, consider the pile head to be fixed in the plane of the bent. Out-of-plane, although the pile head would be fixed to the cap, the cap to superstructure connection is made with elastomeric pads and compressible material; therefore, consider the connection to be 50% fixed. Analyze as if the pile head were fixed, and use 50% of the moment.
- Take the location of fixity as computed by the approximate Davisson method for soft clay or loose sand [AASHTO-LRFD 10.7.3.13.4], and take K = 1.0 rather than a smaller value [AASHTO-LRFD 5.7.4.3]. This will approximate an LPILE analysis.
  Note: For checking or designing a specific bridge use LPILE with the bridge site soil data.
- In STAAD analyze a strip frame of tributary width for a pile bent pile in order to determine factored moments.
- For zero-degree skew, check the prestressed concrete pile with “PCI Prestressed Concrete Pile Interaction Diagram Spreadsheet,” considering factored axial load, single-axis factored moment, and slenderness.
- For 45-degree skew use the PCI spreadsheet and then the Bresler reciprocal load method [AASHTO-LRFD 5.7.4.5] to check biaxial bending.

General study of J-06-series and H-06-series pile bent piles

The table below summarizes two-dimensional STAAD frame runs for the following conditions:

- Loads are applied at Strength I magnitude.
- Live loads are not reduced for bridge width or a multiple presence factor. (This conservatism partially compensates for variations in pile loads due to spaced beam loads in the H-06-series bridges.)
- The superstructure frame strip is of a stiffness determined for pile bent pile spacing.
- At each abutment a single HP 10x42 abutment pile is fixed to the superstructure strip and fixed 15 feet below that strip. (Although the abutment pile spacing may not match the strip width, the stiffness of the pile is relatively small and will not significantly influence the pile bent pile, which is a span distance away from the abutment.)

- Pile bent piles are placed at a 45-degree skew. (A comparison of the checks for skewed and unskewed piles in the second table below indicated that the skewed pile would control.)
- At a monolithic cap, piles are fixed about each axis. (Partial fixity was assumed for design checks.)
- At a non-monolithic cap, piles are fixed in the plane of the bent but pinned out-of-plane. (Design checks assumed fixity and partial fixity, respectively.)
- 14-inch prestressed concrete piles are fixed 9 feet below ground, and 16-inch piles are fixed 10 feet below ground. (These distances are based on soft soil and the Davisson method. Although LPILE may indicate fixity at greater depths, the shallower depths will increase pile stiffness and result in conservative pile moments. The use of K = 1.0 approximates the LPILE buckling length.)

Factored loads and moments from STAAD runs assuming fixed pile heads

Pile size, inches	STAAD run	Series, length, feet	Strip width, feet	H, feet	P_u, kips	M_{ux} at top, in-k (bottom)	M_{uy} at top, in-k (bottom)
14	03FIX	J, 100	3.24	18	90.49	462.83	462.83
	03PIN	J, 100	3.24	18	92.33	(27.40)	(27.40)
	03FXS	J, 100	3.24	7	93.28	746.32	746.32
	07FXP	J, 100	3.24	18	103.40	457.58	(22.18)
	10FXP	H, 243	1.77	18	84.80	312.33	(46.15)
16	04FIX	J, 140	2.47	22	108.11	732.48	732.48
	04PIN	J, 140	2.47	22	109.45	(46.90)	(46.90)
	04FXS	J, 140	2.47	7	102.09	1262.96	1262.96
	08FXP	J, 140	2.47	22	113.71	752.99	(39.17)
	11FXP	H, 243	2.15	22	103.13	431.61	(57.87)

Table notes

(1) Using an average load factor of 1.45, maximum P10A loads at factored strength limit state are 95.7 kips and 110.2 kips for 14-inch and 16-inch piles, respectively. The loads determined from the strip analysis approximately check the J-06- and H-06-series loads.
(2) Moments for short piles are larger than moments for maximum height piles, which are more flexible.
(3) Moments are larger for J-06-series bridges than for comparable H-06-series bridges.
(4) Controlling cases to be checked are indicated with yellow shading.

The table below summarizes the controlling checks with "PCI Prestressed Concrete Pile Interaction Diagram Spreadsheet" assuming the proposed partial or full fixity at pile heads. The spreadsheet includes the effects of slenderness.

Checks of controlling cases using PCI Spreadsheet

STAAD run, pile size, in	Skew, H, feet	P_u, kips	M_{ux}, ft-k	% fixity	M_{uy}, ft-k	% fixity	φP_n, kips permissible
03FXS, 14	0, 7	93.28	44	50	---	---	405
	45, 7	93.28	31	50	31	50	354
07FXP, 14	0, 18	103.40	27	50	---	---	258
	45, 18	103.40	38	100	19	50	158
04FXS, 16	0, 7	102.09	74	50	---	---	510
	45, 7	102.09	53	50	53	50	449
08FXP, 16	0, 22	113.71	44	50	---	---	310
	45, 22	113.71	63	100	31	50	144

Table notes

(1) The controlling P_u values would correlate with nominal resistances of 137 and 151 kips for 14-inch and 16-inch piles, respectively.
(2) The taller piles at 45-degree skew control, as indicated by the yellow shading. At the controlling conditions there is not much overcapacity.
(3) The equivalent eccentricities for the controlling cases are 4.4 inches and 2.2 inches for the x and y axes of the 14-inch pile and 6.6 inches and 3.3 inches for the x and y axes of the 16-inch pile. These are well above minimum eccentricities
(4) By computations not shown in the table, assumed full fixity for the 16-inch pile caused some checks to fail.

Under construction conditions two cases for the 14-inch pile were checked: (1) cap pour and (2) C-beam placement. For the cap pour the pile had extra capacity, but for the beam placement the pile had virtually no extra capacity.

References

AISC Marketing, Inc. (1986) *Highway Structures Design Handbook, Volume I.* AISC Marketing, Inc., Pittsburgh, PA.

Bridge Design Section. (2008) *LRFD Bridge Design Manual.* State of Louisiana, Dept. of Transportation and Development, Baton Rouge, LA.

Ferdous, M.R. (2007) *Pile Capacity Utilization for Bridge Bents Designed Using Simplified Procedures.* M.S. Thesis, Louisiana State University, Baton Rouge, LA.

Greimann, L.G., R.E. Abendroth, D.E. Johnson, and P.B. Ebner. (1987) *Pile Design and Tests for Integral Abutment Bridges, Final Report, HR-273.* Department of Civil Engineering, Iowa State University, Ames, IA.

Harries, K.A. and M.F. Petrou. (2001) "Behavior of Precast, Prestressed Concrete Pile to Cast-in-Place Pile Cap Connections." *PCI Journal,* Vol. 46, No. 4, 82-92.

Kumar, P.S., R.R. Giridhar, and P. Parameswaran. (2007) "Buckling Behavior of Axially Loaded Partially Embedded Concrete Piles in Sand." *Electronic Journal of Geotechnical Engineering,* Paper 2007-0725, 11 pages.

Mokwa, R.L. and J.M. Duncan. (2003) "Rotational Restraint of Pile Caps during Lateral Loading." *Journal of Geotechnical and Geoenvironmental Engineering,* Vol. 129, No. 9.

PCI Committee on Prestressed Concrete Piling. (1993) "Recommended Practice for Design, Manufacture and Installation of Prestressed Concrete Piling." *PCI Journal,* Vol. 38, No. 2, 14-41.

PCI Industry Handbook Committee. (2004) *PCI Design Handbook, 6th Edition.* PCI, Chicago, IL.

Possiel, B.A. (2008) *Point of Fixity Analysis of Laterally Loaded Bridge Bents.* M.S. Thesis, North Carolina State University, Raleigh, NC.

Rollins, K.M. and T.E. Stenlund. (2008) *Laterally Loaded Pile Cap Connections.* Department of Civil and Environmental Engineers, Brigham Young University, Provo, UT.

Wang, S-T. and L.C. Reese. (1993) *COM624P—Laterally Loaded Pile Analysis Program for the Microcomputer, Version 2.0.* Federal Highway Administration, Washington, DC.

Wasserman, E.P. and J.H. Walker. (1996) "Integral Abutments for Steel Bridges." *Highway Structures Design Handbook, Vol. II, Chap. 5.* American Iron and Steel Institute, Washington, DC.

Wilson, K.E., R.E. Kimmerling, G.C. Goble, P.J. Sabatini, S.D. Zang, J Y. Zhou, W.A. Amrhein, J, W. Boucher, and L.J. Danaovich. (2005) *LRFD for Highway Bridge Substructures and Earth Retaining Structures Reference Manual.* National Highway Institute, Arlington, VA.

Pile bents with concrete-filled steel pipe piles ~ 17 December 2008

Contents

Summary 22
History 23
Issues 23
Analysis and design conditions for the general study 27
General study of J-06-series and H-06-series pile bent piles 28
References 29

Summary

For J-06-series, H-06-series, and similar bridges the present allowable P10A loads for 14-inch and 16-inch steel pipe piles, 30 tons and 36 tons, may be increased to the same values as for prestressed concrete piles, 33 and 38 tons. If these bearing values are extrapolated to the strength level using the average load factor 1.45 and compression phi factor 0.80, the nominal axial resistance for a 14-inch pile thus is 119 kips, and the nominal resistance for a 16-inch pile is 137 kips.

The respective maximum heights (H) based on the general study are the same as for prestressed concrete piles, 18 feet and 22 feet, an increase in height for the 14-inch pile. Generally it would be advisable not to use heights (H) less than 7 feet, especially if soils near the surface are relatively stiff.

Permissible heights (H), nominal resistances, and maximum plan sheet bearings for concrete-filled steel pipe piles in pile bents

Pile diameter inches (1)	Maximum height, H, feet	Recommended minimum height, H, feet	Minimum soil penetration feet (2)	Nominal Resistance, P_n kips (3)	Max. plan sheet bearing, tons
14	18	7	24	119	33
16	22	7	27	137	38

Table notes:

(1) Minimum wall thicknesses are: 14-inch: Grade 2-0.219 inch, Grade 3-0.203 inch; 16-inch: Grade 2-0.230 inch, Grade 3-0.230 inch.

(2) These values ensure that the pile is sufficiently long so as to have a point of fixity. They were determined for the Davisson method [AISC 1986] but then reduced based on LPILE runs [Wang and Reese 1993]. In very few cases will LPILE require a greater penetration. If penetration is less than the table minimum, the pile requires special analysis.

(3) $\varphi_c = 0.80$

These nominal resistances are sufficient for all H-06-series bridges but not for all J-06-series bridges.

Since the P10A sheet was developed AASHTO has added to the minimum pile spacing rule. The original minimum spacing of 2.5 feet now only is applicable for piles 12 inches or less in size. With the additional 2.5D rule, for a 14-inch pile the minimum spacing is 2.92 feet, and for a 16-inch pile is 3.33 feet. In some cases the J-06-series and H-06-series pile spacings are less and violate the AASHTO rule.

The AASHTO LRFD Specifications no longer specify minimum pile penetration: 10 feet in hard cohesive or dense granular material, 20 feet in soft cohesive or loose granular material, or one-third of the unsupported height (H) of a pile in a pile bent. In most cases, however, the minimum penetration in the table above will control, unless the designer specially analyzes the pile.

History

The first P10A sheet was issued in 1959 and had five trestle pile types (plus four foundation pile types) including the three on the present P10A sheet. Bearing values and maximum height (H) dimensions on the present sheet are the same as they were on the 1959 sheet. For the pipe pile type the weights given on the P10A sheet no longer match the weights in the ASTM standard [A 252 – 98 (Reapproved 2007)].

Although no office records exist with respect to the loads and heights permitted for the pipe piles on the P10A sheet, the allowable loads seem to approximate the pattern of side dimensions: 30/36 = 0.83 and 14/16 = 0.88. The allowable heights (with an assumed depth to fixity of 6 feet for “scour and mud” based on past office practice), however, do not follow a simple L/D ratio: (13+6)/1.1667 = 16.3 for the 14-inch pile and (22+6)/1.3333 = 21.0 for the 16-inch pile. The ratio for the 16-inch pile is considerably less conservative than the ratio for the 14-inch pile.

Issues

- **Loading and pile head bracing:** See “Pile bents with steel H-piles.”

- **Pipe wall thickness:** Pipe wall thickness is not given on the P10A sheet, but the thickness can be determined from the listed weight as indicated in the table below. Note that the P10A sheet weights do not match the present ASTM standard [A252-98 (2007)], and the thicknesses for Grade 3 pipe do not meet the AASHTO minimum [AASHTO-LRFD 6.9.4.2].

Weights and wall thicknesses of P10A pipe piles

Pipe diameter, inches	Grade 2 (35 ksi)		Grade 3 (45 ksi)	
	Weight, lb/ft P10A/ASTM	Thickness, inches P10A/AASHTO min [6.9.4.2] (1)	Weight, lb/ft P10A/ASTM	Thickness, inches P10A/AASHTO min [6.9.4.2] (1)
14	32.20/32.26	0.219/0.179	27.66/27.76	0.188/0.203
16	38.74/38.77	0.230/0.203	36.87/36.95	0.219/0.230

Table notes:

(1) These thicknesses are the minimum available pipe thicknesses larger than the computed AASHTO minimum. The referenced AASHTO article does permit the designer to substitute a lower, computed maximum compressive stress due to the factored axial force and bending moment, and the computed stress can reduce the minimum thickness requirement.

(2) Shaded table cells indicate differences between the P10A sheet and standards.

The following are additional comments on pipe pile wall thickness:

- The thickness in the table does not allow for corrosion.
- Nebraska DOR uses a 0.188-inch minimum thickness.
- Missouri DOT uses a 0.25-inch minimum for 14-inch piles and a 0.375-inch minimum for 16-inch piles to avoid damage during construction.
- One author has recommended a general minimum pipe pile size of 10 inches and wall thickness of 5/16 inch [Teng 1962].
- The wall thicknesses in the table are less than the minimum thickness for structural steel, 5/16 inch, specified by AASHTO [AASHTO-LRFD 6.7.3], but it is unclear as to whether a concrete-filled pipe pile is considered structural steel. The Nebraska DOR and Missouri DOT obviously do not apply the rule.
- Lateral load testing discussed in a literature review [Stephens and McKittrick 2005] generally has been conducted on piles with 0.5-inch thickness, probably because of seismic considerations.

Considering the AASHTO rule for minimum thickness, as well as corrosion and potential for construction damage, it would be appropriate to increase the Grade 3 pile thicknesses to the AASHTO minimums in the table.

- **Comparisons with prestressed concrete piles**

If the short-term composite action of the concrete fill in the steel pipe piles on the P10A sheet is considered, the stiffnesses (EIs) of the pipe piles very closely match the stiffnesses of the comparable concrete gross cross sections of the prestressed concrete piles. The table below shows the comparisons.

Comparison of stiffnesses of P10A steel pipe piles and prestressed concrete piles

Steel pipe pile					Square prestressed concrete pile
Size, inches	Wall thickness, in	Grade	Composite I, in^4	EI, $k\text{-}in^2$	EI, $k\text{-}in^2$
14	0.219	2	410	11,890,000	12,903,001
14	0.188	3	383	11,107,000	
16	0.230	2	672	19,488,000	22,011,951
16	0.219	3	658	19,082,000	

Considering the relatively close stiffness match it will be reasonable to assume the same depth to fixity and same STAAD frame results for P10A steel pipe piles as for prestressed concrete piles. As a check, STAAD longitudinal strip frame results for 16 x 16-inch prestressed concrete piles and 16-inch diameter composite pipe piles were compared. The pipe pile results were slightly smaller as expected and, therefore, using the available prestressed pile results will be conservative.

- **Fixity at tops of piles embedded in monolithic or non-monolithic caps:** The AASHTO LRFD Specifications [AASHTO LRFD 10.7.1.2] require an embedment of 12.0 minimum or a reduced embedment of 6.0 minimum with embedded dowel, bar, or strand attachment. The P10A sheet requires 12-inch embedment with dowels for piles in monolithic caps (J-06-series bridges) and 18-inch embedment without dowels for non-monolithic caps (J-06- or H-06-series bridges). The P10A sheet requirements exceed the AASHTO minimums.

  No tests were found in the literature that attempted to quantify the relative fixity of the pipe pile to cap connection based on pile embedment. However, testing by Montana researchers generally indicated an effective fixity for embedment equal to the diameter of the pile [Stephens and McKittrick 2005].

  Based on the various tests and studies conducted to date on other pile types, the P10A connections for steel pipe piles may be classified as partially fixed at the monolithic J-06-series cap and fully fixed to the J-06-series and H-06-series non-monolithic cap.

- **Fixity at non-monolithic cap to superstructure connection:** Possiel conducted tests of a prestressed beam to bent cap connection made with two elastomeric pads (similar to the H-06-series connection, except without the keyed-in diaphragm) and found that the connection resulted in partial fixity [Possiel 2008].

  Based on this testing and analysis, the J-06- and H-06-series non-monolithic cap to superstructure connection, out-of-plane, may be classified as partially fixed. In the plane of the pile bent, where the full width of the superstructure is engaged, the connection should be considered fixed.

- **Fixity at bottoms of piles:** The AASHTO LRFD Specifications give an approximate method to determine point of pile fixity [AASHTO-LRFD 10.7.3.13.4] developed in the 1960s by Davisson. At this time the method is known to be unconservative to some [Wilson et al. 2005] but not to all [Kumar et al. 2007]. Although the method was permitted for final design in the 2nd Edition of the AASHTO LRFD Specifications, in the 3rd and 4th Editions the method is be used for preliminary design only. A more accurate point of fixity based on p-y analysis was developed for integral abutment piles [Greimann et al. 1987], and it was shown to vary for lateral load, moment, and buckling. The most recent method to estimate point of fixity and analyze driven piles is to use LPILE or comparable software that utilizes the p-y method.

  With LPILE (previously COM624P), determining the point of fixity seems to be open to engineering judgment. In an integral abutment example, engineers at the Tennessee DOT took the location of first zero deflection below ground as the fixed point [Wasserman and Walker 1996], whereas for pile bents, engineers at the North Carolina DOT take the fixed point as either the maximum negative deflection or the maximum negative moment below ground [Possiel 2008]. The assumptions associated with negative deflection or negative moment seem to have more validity than the first zero deflection.

  The point of fixity will vary depending on the pile shaft stiffness and the amount of fixity at the pile head [Possiel 2008]. The point of fixity will be deeper for a stiffer pile. It will be deeper for a fully fixed pile head, but the depth will depend on whether it is determined as first zero deflection, maximum negative deflection, or maximum negative moment.

  For the pile to have a point of fixity the pile must penetrate into the soil sufficiently so that there are at least two points of zero deflection below ground [Wang and Reese 1993]. If the pile does not penetrate far enough the bottom of the pile will deflect laterally in a “fence-posting” mode of behavior.

- **Buckling length and K-value:** With LPILE the buckling length can be determined as the distance between points of zero moment [Wasserman and Walker 1996]. For a pinned-head pile this distance is from the pile head to the first point of zero moment on the pile below. For a fixed-head pile, one distance is between the first two points of zero moment on the pile [Wasserman and Walker 1996], but there also is a distance above the first point that should be doubled to make a full buckling curve. This upper distance seems to be recognized but incorrectly analyzed in the literature [Wang and Reese 1993] and is difficult to determine if the pile head is not held to a fully fixed head zero slope, which gives a warning in LPILE. When using the

buckling lengths determined from LPILE, the K-value should be taken as 1.0 because the lengths are for the full buckling curve.

After comparing buckling lengths determined using the Davisson method for point of fixity and LPILE, it appears that establishing fixity with the Davisson method and using K = 1.0 (with the length from point of fixity to pile head) usually will approximate the results from LPILE. Because of the simplicity of the Davisson method it gives more consistent results than LPILE and, for a general study, the Davisson method with K = 1.0 is more convenient.

- **Minimum pile spacing:** The AASHTO LRFD Specifications [AASHTO LRFD 10.7.1.2] require that piles be spaced center-to-center not less than 30.0 inches or 2.5 pile diameters, whichever is larger. (The two-part rule has been in the AASHTO Standard Specifications since the late 1980s or early 1990s.) Based on width, for 14-inch piles the minimum spacing is 35 inches or 2.92 feet, and for 16-inch piles is 40 inches or 3.33 feet. For J24 series bridges 120 feet or more in length and skewed 30 degrees or less, pile bent piles are spaced too close to meet the minimum spacing requirements for one or both prestressed pile sizes. For H40 series bridges piles are spaced too close for some of the bridges 163.83 feet long and greater, depending on skew.

- **Eccentricity:** AISC has not established rules for minimum eccentricity of column axial load. It is common practice, however, to determine eccentricity of column load from connection details. The Iowa DOT Standard Specifications have no rules for misplacement of the heads of steel pipe piles (but allow up to 4 inches for prestressed piles, which also are relatively stiff displacement piles). Therefore, without tolerance rules for heads of pipe piles, any design eccentricity should be based on details or engineering judgment.

- **Battered piles:** Assume that increase in axial load in battered piles may be neglected. This assumption follows present office practice.

- **Scour:** Because pile bents are to be used only for sites with small streams and limited drainage area, some sites may be subjected to minor scour. In those cases the designer may simply consider the ground line to be at the maximum scour and choose a pile size for the increased height (H).

- **Pile penetration:** The 2nd Edition of the AASHTO LRFD Specifications required that piles penetrate a minimum of 10 feet in hard cohesive or dense granular material and 20 feet in soft cohesive or loose granular material and that piles for trestle bents penetrate a minimum of one-third of the unsupported length [AASHTO-LRFD 2nd Edition 10.7.1.2]. These minimums do not appear in the 3rd or 4th Editions. They also do not account for minimum penetration required for p-y analysis.

- **Frame moments:** Because of the partial or full fixity at the pile head to superstructure connection, steel pipe piles will be subjected to moment in the plane parallel with centerline of roadway. Generally the moment from the superstructure is considerably larger than the moment due to temperature movement or water loads. Therefore, the pile head moment(s) will be the controlling moment condition.

  The amount of moment applied to the pile depends on the relative stiffnesses of the pile and superstructure and the amount of head fixity. Generally the pile is more flexible than the superstructure and thus is subjected to relatively small moments. However, if the height of the pile above ground is relatively small, the pile will be stiffer and will attract more moment. For the general study, the minimum ground to cap height (H) was set at 7 feet to check the stiffer pile condition.

  Moments from the superstructure need to be determined from a frame analysis, but moments from temperature movement and water loads can be estimated accurately from standard formulas.

- **Design procedures from other states: (Determining preliminary configuration of the pile bent and the magnitudes of loads is common to all procedures.)**

North Carolina: (1) Evaluate soil conditions; (2) Run LPILE to determine point of fixity at maximum negative moment or maximum negative deflection; (3) Analyze structure as a frame with piles fixed at point of fixity; (4) Design piles [Possiel 2008].

Louisiana Simplified LRFD for small, non-critical projects: (1) Determine point of fixity as 5 feet below ground or scour line (Scour is a minimum of 5 feet.); (2) Check slenderness limit, $L/d \leq 20$; (3) Use tabulated axial compressive resistance to design piles [Bridge Design Section 2008]. This method was checked for an expansion bent with various LRFD load combinations and found to be adequate for wind loads not exceeding 55 mph [Ferdous 2007]. If this method were used for a 14-inch pipe pile without scour, the maximum height above ground would be 18.33 feet with a maximum factored dead plus live load of 170 kips. For a 16-inch pipe pile without scour, the maximum height would be 21.67 feet with a maximum factored dead plus live load of 260 kips. (This method is less conservative than the P10A sheet.)

Louisiana Detailed LRFD: (1) Determine point of fixity using Davisson method [AASHTO LRFD 10.7.3.13.4]; (2) Model superstructure in STAAD, and determine pile loads; (3) Use LPILE to determine point of fixity based on loads; (4) Revise STAAD model for second point of fixity; (5) Design piles [Bridge Design Section 2008].

Analysis and design conditions for the general study of pile bents, on which the design manual simplified method is based, with notes for design of special bridges

- Consider only the Strength I limit state. Strength III and V, which include wind, are not likely to control because the jointless superstructure acting as a wide horizontal beam will carry all except part of the substructure wind loads to the abutments. The superstructure also will carry braking forces to the abutments. Thus the loads in Strength I to consider are dead (DC and DW), live and dynamic load allowance (LL and IM), temperature (TU), and water (WA).
- A typical water load results in a very small moment at the pile head where the overall moment is maximum. For a general study, neglect the water load.
  Note: For checking a specific bridge, include the water load if applicable.
- Consider a pile placed in a zero-degree skew bridge and in a 45-degree skew bridge in order to identify maximum loading and controlling pile slenderness conditions. These two skews are the extremes for J-series and H-series bridges. Because of the circular, symmetrical shape of a pipe pile, in many cases the conditions about two perpendicular axes can be resolved to a single condition.
- For monolithic caps, the embedment is less than the pile size; therefore, consider the pile head to be 50% fixed. Analyze as if the pile head were fixed, and use 50% of the moment.
- For non-monolithic caps, the embedment is greater than the pile size; therefore, consider the pile head to be fixed in the plane of the bent. Out-of-plane, although the pile head would be fixed to the cap, the cap to superstructure connection is made with elastomeric pads and compressible material; therefore, consider the connection to be 50% fixed. Analyze as if the pile head were fixed, and use 50% of the moment.
- Take the location of fixity as computed by the approximate Davisson method for soft clay or loose sand [AASHTO-LRFD 10.7.3.13.4], and take K = 1.0 for the length from point of fixity to underside of monolithic cap or top of non-monolithic cap. This will approximate the buckling length from an LPILE analysis.
  Note: For checking or designing a specific bridge use LPILE with the bridge site soil data.
- In STAAD analyze a strip frame of tributary width for a pile bent pile in order to determine factored moments.
- Check the pile according to AASHTO LRFD specifications:
  - Pipe wall thickness [6.9.4.2]
  - Limiting slenderness ratio [6.9.3]
  - Nominal compressive resistance [6.9.5.1 and 6.9.5.2]
  - Flexure of concrete filled tubes [6.12.2.3.2]
  - Combined axial compression and flexure [6.9.2.2]

General study of J-06-series and H-06-series pile bent piles

The table below summarizes two-dimensional STAAD frame runs for the conditions listed below. Although the STAAD runs were for 14-inch and 16-inch square prestressed concrete piles, the relative stiffnesses of concrete filled 14-inch and 16-inch pipe piles are nearly the same, and the prestressed pile results can be used conservatively with the pipe piles. All items directly below, and the table apply to prestressed concrete piles.

- Loads are applied at Strength I magnitude.
- Live loads are not reduced for bridge width or a multiple presence factor. (This conservatism partially compensates for variations in pile loads due to spaced beam loads in the H-06-series bridges.)
- The superstructure frame strip is of a stiffness determined for pile bent pile spacing.
- At each abutment a single HP 10x42 abutment pile is fixed to the superstructure strip and fixed 15 feet below that strip. (Although the design abutment pile spacing may not match the strip width, the stiffness of the pile is relatively small and will not significantly influence the pile bent pile, which is a span distance away from the abutment.)
- The prestressed concrete piles are placed at a 45-degree skew. (A comparison of the checks for skewed and unskewed piles indicated that skewed piles would control.)
- At a monolithic cap, piles are fixed about each axis. (Partial fixity was assumed for design checks.)
- At a non-monolithic cap, piles are fixed in the plane of the bent but pinned out-of-plane. (Design checks assumed fixity and partial fixity, respectively.)
- 14-inch prestressed concrete piles are fixed 9 feet below ground, and 16-inch piles are fixed 10 feet below ground. (These distances are based on soft soil and the Davisson method. Although LPILE may indicate fixity at greater depths, the shallower depths will increase pile stiffness and result in conservative pile moments. The use of K = 1.0 with the length from point of fixity to pile head approximates the LPILE buckling length.)

Factored loads and moments for checking pipe piles. (These loads and moments from STAAD runs for prestressed concrete piles will be nearly the same as for pipe piles because both pile types have nearly the same EI for the same size.)

Pile size, inches	STAAD run	Series, length, feet	Strip width, feet	H, feet	P_u, kips	M_{ux} at top, in-k (bottom)	M_{uy} at top, in-k (bottom)
14	03FIX	J, 100	3.24	18	90.49	462.83	462.83
	03PIN	J, 100	3.24	18	92.33	(27.40)	(27.40)
	03FXS	J, 100	3.24	7	93.28	746.32	746.32
	07FXP	J, 100	3.24	18	103.40	457.58	(22.18)
	10FXP	H, 243	1.77	18	84.80	312.33	(46.15)
16	04FIX	J, 140	2.47	22	108.11	732.48	732.48
	04PIN	J, 140	2.47	22	109.45	(46.90)	(46.90)
	04FXS	J, 140	2.47	7	102.09	1262.96	1262.96
	08FXP	J, 140	2.47	22	113.71	752.99	(39.17)
	11FXP	H, 243	2.15	22	103.13	431.61	(57.87)

Table notes

(1) All bridges are skewed 45 degrees.
(2) Using an average load factor of 1.45, maximum P10A loads of 33 tons and 38 tons at the factored strength limit state are 95.7 kips and 110.2 kips for 14-inch and 16-inch prestressed concrete piles, respectively. The loads determined from the strip analysis approximately check the J-06- and H-06-series loads.
(3) Moments for short piles are larger than moments for maximum height piles, which are more flexible.
(4) Moments are larger for J-06-series bridges than for comparable H-06-series bridges.
(5) Controlling cases to be checked are indicated with yellow shading.

The table below summarizes the controlling checks with an Excel spreadsheet written to consider the various AASHTO rules associated with concrete-filled pipe piles.

Checks of controlling cases for concrete-filled pipe piles

STAAD run	Pile dia., in; Grade	Skew; H, feet	P_u, kips	M_{ux}, in-k	M_{uy}, in-k	M_{ur}, in-k (2)	Check ratio (3)
03FXS	14; 2	45; 7	93.28	373.16	373.16	527.73	0.554
	14; 3 (1)	45; 7	93.28	373.16	373.16	527.73	0.504
07FXP	14; 2	45; 18	103.40	457.58	228.79	511.59	0.652
	14; 3 (1)	45; 18	103.40	457.58	228.79	511.59	0.612
04FXS	16; 2	45; 7	102.09	631.48	631.48	893.05	0.649
	16; 3 (1)	45; 7	102.09	631.48	631.48	893.05	0.536
08FXP	16; 2	45; 22	113.71	752.99	376.50	841.87	0.703
	16; 3 (1)	45; 22	113.71	752.99	376.50	841.87	0.604

Table notes

(1) For the P10A Grade 3 piles the thicknesses do not meet the AASHTO local buckling requirement unless the computed compressive stress rather than the yield stress is considered [AASHTO-LRFD 6.9.4.2].

(2) M_{ur} was determined by resolving M_{ux} and M_{uy}, which were determined by considering pile axes in and out of the plane of the bent.

(3) The taller, Grade 2 piles control.

Under construction conditions two cases for the 14-inch pile were checked: (1) cap pour and (2) C-beam placement for an H40, 243-foot bridge. C-beam placement was the controlling condition, with an acceptable check of 0.418 < 1.000.

References

AISC Marketing, Inc. (1986) *Highway Structures Design Handbook, Volume I.* AISC Marketing, Inc., Pittsburgh, PA.

American Society for Testing and Materials. (2007) "ASTM A 252 – 98 (Reapproved 2007) Standard Specification for Welded and Seamless Steel Pipe Piles." American Society for Testing and Materials, Conshohocken, PA.

Bridge Design Section. (2008) *LRFD Bridge Design Manual.* State of Louisiana, Dept. of Transportation and Development, Baton Rouge, LA.

Bruneau, M. and J. Marson. (2004) "Seismic Design of Concrete-Filled Circular Steel Bridge Piers." *Journal of Bridge Engineering,* Vol. 9, No. 1, 24-34.

Ferdous, M.R. (2007) *Pile Capacity Utilization for Bridge Bents Designed Using Simplified Procedures.* M.S. Thesis, Louisiana State University, Baton Rouge, LA.

Greimann, L.G., R.E. Abendroth, D.E. Johnson, and P.B. Ebner. (1987) *Pile Design and Tests for Integral Abutment Bridges, Final Report, HR-273.* Department of Civil Engineering, Iowa State University, Ames, IA.

Kumar, P.S., R.R. Giridhar, and P. Parameswaran. (2007) "Buckling Behavior of Axially Loaded Partially Embedded Concrete Piles in Sand." *Electronic Journal of Geotechnical Engineering,* Paper 2007-0725, 11 pages.

Possiel, B.A. (2008) *Point of Fixity Analysis of Laterally Loaded Bridge Bents.* M.S. Thesis, North Carolina State University, Raleigh, NC.

Stephens, J.E. and L.R. McKittrick. (2005) *Performance of Steel Pipe Pile-to-Concrete Bent Cap Connections Subject to Seismic or High Transverse Loading: Phase II.* Civil Engineering Department, Montana State University, Bozeman, MT.

Teng, W.C. (1962) *Foundation Design,* Prentice-Hall Inc., Englewood Cliffs, New Jersey.

Wang, S-T. and L.C. Reese. (1993) *COM624P—Laterally Loaded Pile Analysis Program for the Microcomputer, Version 2.0.* Federal Highway Administration, Washington, DC.

Wasserman, E.P. and J.H. Walker. (1996) "Integral Abutments for Steel Bridges." *Highway Structures Design Handbook, Vol. II, Chap. 5.* American Iron and Steel Institute, Washington, DC.

Wilson, K.E., R.E. Kimmerling, G.C. Goble, P.J. Sabatini, S.D. Zang, J Y. Zhou, W.A. Amrhein, J, W. Boucher, and L.J. Danaovich. (2005) *LRFD for Highway Bridge Substructures and Earth Retaining Structures Reference Manual.* National Highway Institute, Arlington, VA.

TABLE OF CONTENTS ~ RETAINING WALLS

6.7 Retaining walls
6.7.1 General
6.7.1.1 Policy overview
6.7.1.2 Design information
6.7.1.3 Definitions
6.7.1.4 Abbreviations and notation
6.7.1.5 References
6.7.2 Loads
6.7.2.1 Lateral earth pressure
6.7.2.2 Water
6.7.3 Load application
6.7.3.1 Load modifier
6.7.3.2 Limit states
6.7.4 Guidelines by wall type
6.7.4.1 Conventional
6.7.4.1.1 Analysis and design
6.7.4.1.2 Detailing
6.7.4.2 Modular block
6.7.4.3 Segmental
6.7.4.4 Mechanically stabilized earth (MSE)
6.7.4.5 GRS-IBS
6.7.4.6 Other

6.7 Retaining walls

6.7.1 General

Retaining walls may be either part of highway bridge substructures or independent structures. Conventional reinforced concrete retaining walls attached to bridge abutments are identified as wings or wing walls and, for the design of those components, the designer should review the wing wall article [BDM 6.5.4.3]. The Design Bureau has standard details for a combined retaining wall and sidewalk, and in unusual cases the designer may need to refer to those details [DB SRP MI-221].

6.7.1.1 Policy overview

In Iowa rural areas there often is sufficient right-of-way so that differences in ground elevation can be managed with reasonable ground slopes. In urban areas, however, there may be insufficient space for ground slopes and thus a need for retaining structures independent of bridge substructures.

Depending on the difference in ground elevation, the options for retaining walls from small to large heights typically are the following: modular block, segmental, conventional, and mechanically stabilized earth (MSE). For many heights there will be two or more reasonable options, and the designer will need to select among the options based on cost, aesthetics, construction, and site factors.

Three of the options are proprietary: modular block, segmental, and mechanically stabilized earth. For these options, design generally is completed by a consulting Professional Engineer licensed in the State of Iowa. The proprietary systems are limited to approved manufacturers and suppliers identified by the Construction and Materials Bureau in Instructional Memorandums (IMs). Instructional Memorandums also cover detailed material testing and certification requirements. The Iowa DOT Standard Specifications cover materials, construction, method of measurement, and basis of payment.

Although not stated directly in the Iowa DOT Standard Specifications, current design practice for the approved proprietary retaining wall systems generally follows service load design. Design of modular block retaining walls is the responsibility of the engineer. Design of a segmental wall is required to be in accordance with a National Concrete Masonry Association design manual [BDM 6.7.1.5]. The Iowa DOT Standard Specifications currently require that an MSE wall be designed by the AASHTO Standard Specifications. At least one MSE wall supplier can provide load and resistance factor design (LRFD) at this time and, in the future, the Bureau expects to change practice to specify load and resistance factor design.

Conventional gravity and cantilever reinforced concrete retaining walls shall be designed by the AASHTO LRFD Specifications. The complete design needs to include checks of structural and geotechnical conditions checked either by the Soils Design Unit or structural designer. The overall stability should be checked by the Soils Design Unit, and the Unit should provide the designer with bearing and sliding resistances for the strength limit state. Based on those resistances the structural designer shall check bearing, eccentricity, and sliding at the strength limit state. The designer shall consult with the Soils Design Unit regarding wall settlement and lateral displacement at the service limit state.

On urban sites there may be requirements for aesthetic treatment of conventional retaining walls. In those cases, the designer shall provide adequate cover over reinforcing bars considering the depressions caused by form liners and inserts.

Generally, the Bureau recommends that retaining walls be designed for minimal maintenance over a service life of 75 to 100 years. At this time there is no regular inspection program for retaining walls that are not part of bridge substructures.

A geosynthetic reinforced soil integrated bridge system (GRS-IBS) is a combination of a reinforced soil retaining wall and a spread footing. For that system the best design and construction information available is from the Federal Highway Administration (FHWA) [BDM 6.7.1.5 and 6.7.4.5].

6.7.1.2 Design information

The soils information provided for a retaining wall will depend on the type of retaining wall and whether a retaining wall is part of a bridge substructure or an independent structure. For conventional retaining walls the designer will need nominal bearing and sliding resistances for the strength limit state from the Soils Design Unit.

The designer also will need to ensure that the wall is checked for overall stability, settlement, and lateral displacement at the service limit state. In most cases these checks will require that the designer consult with the Soils Design Unit during the design process.

6.7.1.3 Definitions

Primary Highway System: "Primary roads" or "primary road system" means those roads and streets both inside and outside the boundaries of municipalities which are under department (defined as state department of transportation) jurisdiction [Iowa Code 306.3.6].

6.7.1.4 Abbreviations and notation

ABC, accelerated bridge construction
EH, earth (lateral) pressure
FHWA, Federal Highway Administration
GRS-IBS, geosynthetic reinforced soil integrated bridge system
LRFD, load and resistance factor design
MSE, mechanically stabilized earth
S_{D1}, horizontal response spectral acceleration coefficient at 1.0-sec. period modified by long-period site factor [AASHTO-LRFD 3.10.4.2]
WA, water load

6.7.1.5 References

Adams, M., J. Nicks, T. Stabile, J. Wu, W. Schlatter, and J. Hartmann. *Geosynthetic Reinforced Soil Integrated Bridge System, Interim Implementation Guide, FHWA-HRT-11-026.* Washington: Federal Highway Administration, 2012. (Available on the Internet at: http://www.fhwa.dot.gov/publications/research/infrastructure/structures/11026/11026.pdf)

Adams, M., J. Nicks, T. Stabile, J. Wu, W. Schlatter, and J. Hartmann. *Geosynthetic Reinforced Soil Integrated Bridge System, Synthesis Report, FHWA-HRT-11-027.* Washington: Federal Highway Administration, 2011. (Available on the Internet at: http://www.fhwa.dot.gov/publications/research/infrastructure/structures/11027/11027.pdf)

Elias, V., B.R. Christopher, and R.R. Berg. *Mechanically Stabilized Earth Walls and Reinforced Soil Slopes Design and Construction Guidelines, FHWA-NHI-00-043.* Washington: National Highway Institute, Federal Highway Administration, 2001.

Federal Highway Administration (FHWA). *Sample Guide Specifications for Construction of Geosynthetic Reinforced Soil-Integrated Bridge System (GRS-IBS) FHWA-HRT-12-051.* Washington: Federal Highway Administration, 2012. (Available on the Internet at: http://www.fhwa.dot.gov/publications/research/infrastructure/structures/12051/12051.pdf)

National Concrete Masonry Association (NCMA). *Design Manual for Segmental Retaining Walls, Third Edition.* Herndon: National Concrete Masonry Association, 2009.

Construction and Materials Bureau. *Concrete Segmental Blocks, Wet Cast, Instructional Memorandum 445.05.* Ames: Office of Materials, Iowa Department of Transportation, 2006. (Available on the Internet at: http://www.iowadot.gov/erl/current/IM/Navigation/nav.pdf)

Construction and Materials Bureau. *Concrete Segmental & Modular Blocks, Dry Cast, Instructional Memorandum 445.04.* Ames: Office of Materials, Iowa Department of Transportation, 2006. (Available on the Internet at: http://www.iowadot.gov/erl/current/IM/Navigation/nav.pdf)

Construction and Materials Bureau. *Mechanically-Stabilized Earth (MSE) Retaining Wall Panels, Instructional Memorandum 445.03.* Ames: Office of Materials, Iowa Department of Transportation, 2006. (Available on the Internet at: http://www.iowadot.gov/erl/current/IM/Navigation/nav.pdf)

Wilson, K.E., R.E. Kimmerling, G.C. Goble, P.J. Sabatini, S.D. Zang, J.Y. Zhou, W.A. Amrhein, J.W. Bouscher, and L.J. Danaovich. *LRFD for Highway Bridge Substructures and Earth Retaining Structures Reference Manual, FHWA-NHI-05-094.* Arlington: Federal Highway Administration, National Highway Institute, 2005.

6.7.2 Loads

6.7.2.1 Lateral earth pressure

Earth pressures (EH) result from surcharge loading, backfill and retained soil, and compaction. Depending on lateral deflection of the wall, earth pressures can be classified as active, at rest, or passive. For selecting the type of pressure, the Bureau recommends that the designer consult *LRFD for Highway Bridge Substructures and Earth Retaining Structures Reference Manual* [BDM 6.7.1.5].

6.7.2.2 Water

The designer should ensure that the backfill behind a retaining wall is adequately drained. If the backfill cannot be drained adequately the designer shall add full hydrostatic pressure (WA) to the lateral earth pressure [AASHTO-LRFD 11.6.6].

6.7.3 Load application

6.7.3.1 Load modifier

Load factors shall be adjusted by the load modifier, which accounts for ductility, redundancy, and operational importance [AASHTO-LRFD 1.3.2, 3.4.1]. For typical retaining walls the load modifier shall be taken as 1.0.

6.7.3.2 Limit states

By observation, many of the AASHTO LRFD load combinations need not be considered in design of conventional retaining walls. Retaining walls typically are not affected by wind loads, and load factors are such that the Strength I load combination obviously controls over other strength combinations [AASHTO-LRFD Table 3.4.1-1]. Based on the acceleration coefficient S_{D1} [AASHTO-LRFD 3.10.4.2] for Site Class A through E [AASHTO-LRFD 3.10.3.1], all of Iowa shall be classified as Seismic Zone 1 [AASHTO-LRFD 3.10.6], and therefore Extreme Event I does not apply except for highly unusual Site Class F and Mississippi and Missouri River sites. In unusual cases Extreme Event II may apply for vehicular collision force, check floods, or ice load. Of the service load combinations, only Service I applies for retaining walls. Retaining walls are not subject to fatigue loads, and thus fatigue load combinations do not apply.

Applicable limit states and corresponding design checks are summarized in Table 6.7.3.2. (See also Wilson, K.E. et al. *LRFD for Highway Bridge Substructures and Earth Retaining Structures Reference Manual, FHWA-NHI-05-094* [BDM 6.7.1.5].)

Table 6.7.3.2. Limit states, load combinations, and typical design checks

Limit State and Load Combination	Geotechnical Checks	Structural Checks (3)
Strength I	Bearing	Flexure
	Eccentricity	Shear
	Sliding	
Extreme Event I (1)		Flexure
		Shear
Extreme Event II (1)		Flexure
		Shear
Service I	Overall stability	Crack control
	Settlement	Deflection
	Lateral displacement (2)	

Table notes:

(1) The extreme event limit state does not apply for typical retaining walls. See the discussion above.
(2) Lateral displacement is difficult to determine accurately, and the geotechnical check often will need to be based on engineering judgment.
(3) If a retaining wall serves as a support for another structure the wall also needs to be designed for compression and combined compression and flexure.

6.7.4 Guidelines by wall type

6.7.4.1 Conventional

6.7.4.1.1 Analysis and design

Conventional retaining walls shall be designed in accordance with the AASHTO LRFD Specifications [AASHTO-LRFD 11.6]. Retaining walls shall be designed to withstand lateral earth and water pressures, including any live and dead load surcharge, self-weight of the wall, and temperature and shrinkage effects.

In general, structures that can move away from the retained soil mass will mobilize active earth pressures whereas restrained structures should be designed for at-rest earth pressures. In lieu of determining the required movement at the top of a wall to reach the minimum active earth pressure, designers shall conservatively assume at-rest conditions apply. Walls which deflect horizontally into the retained soil should be designed to resist passive earth pressure.

Unless specified otherwise on the plans, concrete for the retaining wall shall be Class C [IDOT SS 2516.03, B]. Class C concrete shall be assumed to have 28-day strength of 4.0 ksi (28 MPa).

Unless specified otherwise on the plans, reinforcement shall be ASTM A 615/A 615M, ASTM A 996/A 996M, or ASTM A 706/A 706M Grade 60 (Grade 420). Wall reinforcement shall be epoxy coated if the retaining wall is part of a bridge substructure [BDM 6.5.4.3.2], within 25 feet (7.620 m) of the edge of a traveled roadway, or otherwise exposed to deicing chemicals.

Under all applicable limit states, the wall design shall be investigated for any combination of forces that may produce the most severe condition of loading.

The designer shall select maximum and minimum load factors to determine maximum bearing, eccentricity, and bearing [AASHTO-LRFD C11.5.5] for geotechnical design at the strength limit state. The designer shall select resistance factors for foundations from the AASHTO LRFD Specifications [AASHTO-LRFD 11.5.6].

If the extreme event limit state applies, the designer shall take geotechnical resistance factors as 1.0 [AASHTO-LRFD 11.5.7].

The designer shall select maximum and minimum load factors to determine maximum shear and moment, and compression if applicable, for structural design at the strength limit state. The designer shall select resistance factors for reinforced concrete from the AASHTO LRFD Specifications [AASHTO-LRFD 5.5.4.2].

If estimated differential settlement along a segment of a conventional retaining wall exceeds 1/500 the designer shall investigate the effects of the settlement on the strength of the wall.

6.7.4.1.2 Detailing

Unless otherwise detailed, cast-in-place retaining wall concrete will be given a simple Class 2 strip-down surface finish [IDOT 2403.03, P, 2, b]. For projects with aesthetic requirements the designer will need to detail and specify the finish.

In retaining walls that are not part of bridge substructures, expansion and contraction joints shall be provided as required by the AASHTO LRFD Specifications [AASHTO-LRFD 11.6.1.6].

The long-term performance of a retaining wall is dependent on proper drainage of water behind the wall. The designer shall check drainage details to ensure adequate capacity, slope, and discharge.

6.7.4.2 Modular block

A modular block retaining wall is a simple gravity wall that does not involve soil reinforcement in the backfill behind the facing blocks [IDOT SS 2430]. The wall generally is of minimal height. A modular block retaining wall is constructed with an approved proprietary system consisting of block units and other materials that meet Iowa DOT testing and certification requirements [IDOT SS 2430, OM IM 445.04].

A modular block retaining wall shall be designed by a Professional Engineer licensed in the State of Iowa. The Iowa DOT does not specify a design method [IDOT SS 2430].

6.7.4.3 Segmental

A segmental retaining wall generally is taller than a modular block retaining wall and usually does require geogrids or reinforcing strips in the backfill soil behind the facing blocks [IDOT SS 2431]. A segmental retaining wall is constructed with an approved proprietary system consisting of block units, geogrid, and other materials that meet Iowa DOT testing and certification requirements [IDOT SS 2431, OM IM 445.04 and 445.05].

A segmental retaining wall shall be designed by a Professional Engineer licensed in the State of Iowa. The Iowa DOT specifies that the design be according to recommendations in *Design Manual for Segmental Retaining Walls* [BDM 6.7.1.5].

The AASHTO LRFD Specifications consider this wall type to be a mechanically stabilized earth wall [AASHTO-LRFD 11.10.1].

6.7.4.4 Mechanically stabilized earth (MSE)

A mechanically stabilized earth (MSE) retaining wall makes use of large precast reinforced concrete panels connected to strips or mesh in the backfill soil that create a reinforced earth zone behind the panel facing [IDOT SS 2432]. Generally, an MSE wall is economical for heights of 15 feet (4.500 m) or more. An MSE wall is constructed with an approved proprietary system consisting of precast concrete units, earth reinforcing, and other materials that meet Iowa DOT testing and certification requirements [IDOT SS 2432, OM IM 445.03].

A mechanically stabilized earth wall shall be designed by a Professional Engineer licensed in the State of Iowa. The Iowa DOT specifies that the design be according to the AASHTO Standard Specifications [IDOT SS 2432].

6.7.4.5 GRS-IBS

The Geosynthetic Reinforced Soil Integrated Bridge System (GRS-IBS) is a combination of a reinforced soil retaining wall and a spread footing that creates a bridge abutment appropriate for a single span bridge. The system blends the roadway into the bridge superstructure to alleviate the bump at the bridge caused by settlement at the approach pavement. By use of the shallow foundation the system can reduce construction cost and time significantly. If the system is to be used for a bridge over a waterway, the designer must conduct a careful hydraulic analysis because the system is inadequate for some scour conditions.

The GRS-IBS has been used on a Buchanan County, IA local systems bridge and on a state-owned bridge on IA 3 near Pocahontas (FHWA 040101, Maint. No. 7606.0S003). Use of the GRS-IBS on the state system requires approval of the Assistant Bridge Engineer or Chief Structural Engineer.

A designer intending to use the system should obtain the following three FHWA publications [6.7.1.5] and search the Internet for additional resources as needed.

- Sample Guide Specifications for Construction of GRS-IBS
- GRS-IBS Synthesis Report
- GRS-IBS Interim Implementation Guide

The GRS-IBS is included in the Bureau accelerated bridge construction (ABC) policy.

6.7.4.6 Other

Nongravity, anchored, prefabricated modular, and other special types of retaining walls shall be designed according to the AASHTO LRFD Specifications.

TABLE OF CONTENTS ~ CULVERT DESIGN

7 Culvert Design
- 7.1 General
  - 7.1.1 Policy overview
  - 7.1.2 Design information
  - 7.1.3 Definitions
  - 7.1.4 Abbreviations and notation
  - 7.1.5 References
    - 7.1.5.1 Direct
    - 7.1.5.2 Indirect
- 7.2 Reinforced concrete box (cast-in-place)
  - 7.2.1 Loads
    - 7.2.1.1 Dead
    - 7.2.1.2 Live
    - 7.2.1.3 Dynamic load allowance
    - 7.2.1.4 Water
    - 7.2.1.5 Earth pressure
    - 7.2.1.6 Construction
  - 7.2.2 Load application
    - 7.2.2.1 Load modifier
    - 7.2.2.2 Limit states
  - 7.2.3 Analysis and design
    - 7.2.3.1 Barrels
    - 7.2.3.2 Headwalls
      - 7.2.3.2.1 Wings
      - 7.2.3.2.2 Parapet
      - 7.2.3.2.3 Apron
      - 7.2.3.2.4 Curtain wall
    - 7.2.3.3 Barrel extensions
    - 7.2.3.4 Flumes and flume basins
    - 7.2.3.5 Other
  - 7.2.4 Detailing
    - 7.2.4.1 Standard plans
    - 7.2.4.2 Software
    - 7.2.4.3 Plan preparation

7.2.4.4 General

7.2.4.4.1 Excavation

7.2.4.4.2 Granular blankets and working blankets

7.2.4.4.3 Keyways

7.2.4.4.4 Reinforcement

7.2.4.5 Barrels

7.2.4.5.1 Roadway on slab

7.2.4.5.2 Construction joints

7.2.4.5.2.1 Transverse

7.2.4.5.2.2 Longitudinal

7.2.4.5.3 Bell joints

7.2.4.5.4 Horizontally curved alignments

7.2.4.5.4.1 Layout

7.2.4.5.4.2 Transverse reinforcement

7.2.4.5.4.3 Longitudinal reinforcement for single barrels

7.2.4.5.4.4 Longitudinal reinforcement for multiple barrels

7.2.4.5.5 Wall penetrations

7.2.4.5.5.1 Pipes

7.2.4.5.5.2 Weep holes

7.2.4.5.6 Settlement and camber

7.2.4.6 Headwalls

7.2.4.7 Inlets

7.2.4.7.1 Trash racks

7.2.4.7.2 Debris racks

7.2.4.7.3 Safety grates

7.2.4.7.4 End walls

7.2.4.7.5 Slope tapered inlets

7.2.4.7.6 Drop inlets

7.2.4.8 Outlets

7.2.4.8.1 Flumes

7.2.4.8.2 Scour Floors

7.2.4.8.3 Basins

7.2.4.9 Extensions

7.2.4.9.1 Connections

7.2.4.9.2 Skewed reinforcement

7.2.4.9.3 Bell joints

7.2.4.9.4 Backfill

7.2.4.10 Bridge replacements
7.2.4.11 Miscellaneous
7.2.4.11.1 Fish baffles or weirs
7.2.4.11.2 Drain pipe anchors
7.2.4.11.3 Pipe hand railings
7.2.4.11.4 Pedestrian Culverts
7.3 Precast concrete box
7.3.1 Loads
7.3.2 Load application
7.3.3 Analysis and design
7.3.4 Detailing
7.3.4.1 Extensions
7.3.4.2 Miscellaneous
7.3.4.2.1 Fish baffles or weirs
7.3.4.2.2 Weep holes
7.3.4.2.3 Bridge replacements
7.3.4.2.4 Pedestrian culverts
7.3.4.3 Granular leveling material
7.4 Concrete pipe
7.4.1 Loads
7.4.2 Load application
7.4.3 Analysis and design
7.4.4 Detailing
7.4.4.1 Standard plans
7.4.4.2 Software
7.4.4.3 Plan preparation
7.4.4.4 General
7.4.4.5 Pipes
7.4.4.6 Headwalls
7.4.4.7 Inlets
7.4.4.8 Outlets
7.4.4.8.1 Flumes
7.4.4.9 Extensions
7.4.4.10 Miscellaneous
7.4.4.10.1 Pipe hand railings

7 Culvert Design

This section of *Bridge Design Manual* follows the AASHTO LRFD Specifications and the following documents and related software:

- Cast-in-place box culverts
  - "CulvertCalc™ IA Technical Manual", available with downloaded CulvertCalc™ IA software
  - "CulvertCalc™ IA User Manual", available with downloaded CulvertCalc™ IA software
- Precast box culverts
  - "Precast Box Culvert Standards, Barrel and End Section Design Methodology", dated March 11, 2021

7.1 General

7.1.1 Policy overview

A culvert is a drainage structure that passes under a roadway. In the Bureau, a culvert is located and designed by the Preliminary Bridge Design Unit based on site hydrology and hydraulic principles [BDM 4]. Small culverts generally are constructed with standard pipe, and larger culverts are constructed with box sections, either cast-in-place or precast. For a reinforced concrete box culvert, the Preliminary Bridge Design Unit will set the height and opening width for one to three box culvert barrels, as well as the inlet and outlet components. Inlet and outlet components are intended to control water flow and sediment and to prevent erosion or scour.

Generally, for typical site conditions the Bureau now designs alternate cast-in-place and precast reinforced concrete single, twin and triple box culverts. A cast-in-place or precast box culvert must be designed structurally based on live load and the height of fill above the culvert. For standard cast-in-place single box culvert plans, the height of fill can range from zero, in which case traffic rides on the top slab of the culvert, to 55 feet for 3' to 12' span culverts and zero to 16 feet for 14' and 16' span culverts. The fill range is zero to 25 feet for cast-in-place double or triple box culverts. For standard single, twin and triple precast box culverts the height of fill can range from 2 to 25 feet for 6' to 12' spans and 2 to 16 feet for 14' and 16' spans. When using the Bureau standard plans the designer needs to give the height of fill on the plans so that the contractor can select the appropriate reinforcing and quantities.

For design of typical cast-in-place reinforced concrete box culverts the Bureau relies on standard plans for single, twin, or triple barrels; bell joints; flared wing headwalls; parallel wing headwalls; flumes; flume bell joints; and flume basins. Cast-in-place barrel sections generally are limited in length to 38 feet, and the total length of the culvert should consist of 38-foot sections plus shorter varying length end sections needed to meet the overall length. For design of cast-in-place reinforced concrete box culverts that do not fit standard plans the Bureau uses CulvertCalc IA, LRFD software specially developed for the Bureau. Additional features such as tapered or drop inlets, scour floors, handrails, trash racks, and fish baffles are specially designed and added to project plans as needed.

For design of precast box culverts the Bureau provides standard plans for barrels, end sections, and some special details. For production of typical precast box culverts the Bureau has three options. Option A or B must be used if those options fit the project requirements. Option C is only allowed for non-standard designs. Fabricators shall not substitute their own designs and details for any of the three options.

- Option A: ASTM C1577 barrels and Iowa DOT end sections from Single Precast Reinforced Concrete Box Culvert Standards
- Option B: Iowa DOT Single Precast Reinforced Concrete Box Culvert Standards
- Option C: ETCulvert barrel design (or equivalent) for non-standard designs and Iowa DOT end sections from Single Precast Reinforced Concrete Box Culvert Standards

All options require shop drawing submittals for review and documentation. The Contractor shall allow 30 working days for the Engineer's shop drawing review. Precast box culverts also may be used for culvert

extensions in some cases, and the Bureau has prepared several detail sheets for the connection between an existing box culvert and the precast extension.

When precast box culverts are used in stage construction the projects will need to be carefully planned so that the tongue and groove at the end of the first stage fits the tongue and groove at the start of the second stage. This may be accomplished by special attention to detailing of the tongue and groove for the start of the second stage or by procuring all the precast sections in one contract and stockpiling the sections for the second stage.

In most cases the designer should develop plans for each reinforced concrete box culvert or box culvert extension as a stand-alone project. However, the culvert or extension usually becomes part of a new road, road widening, or road resurfacing project of the Design Bureau (DB). Considering the overall road project, the Contracts and Specifications Bureau (CSB) may combine the culvert with other structures and roadwork to assemble an appropriate contract package. Any site-specific issues during construction then are worked out by the local Resident Construction Engineer (RCE).

Reinforced concrete box culverts often are not economical for spans or heights greater than 12 feet. To achieve greater flow-through capacity the Bureau generally uses twin or triple barrels rather than extended spans.

Although a culvert is a drainage structure, if it is more than 20 feet in length along the centerline of roadway between extreme ends of the opening of a single barrel or openings of multiple barrels, it will be classified as a bridge for the National Bridge Inventory. This classification does not affect the design of the culvert, but it ensures that the culvert will be inspected regularly as part of the Iowa DOT's bridge inspection program.

Reinforced concrete box culverts also generally are not economical in sizes less than 3 feet by 3 feet. For relatively small amounts of drainage and heights of fill the Bureau selects standard concrete pipe for culverts under paved roads, corrugated metal pipe for temporary culverts, and unclassified pipe for property entrances. For unclassified pipe the contractor may select from approved pipe materials.

7.1.2 Design information

Typically, the Soils Design Unit will provide a soils package for a box culvert project. The estimated settlement sheet in the package is important for design of camber and use of bell joints. The sheet also will require and show a granular blanket if needed. If the sheet is not provided, the designer shall contact the Soils Design Unit for information.

7.1.3 Definitions

Apron refers to the reinforced concrete floor between wing walls at a typical reinforced concrete box culvert inlet or outlet. At an outlet a scour floor may be added beyond the apron. Apron also refers to the flared end section at the inlet and outlet for a pipe culvert.

Barrel refers to the main culvert component of rectangular or square cross section that passes under the roadway. The barrel functions as a pipe for ditch and small stream drainage.

Curtain wall, curtain, scour curtain, cut-off wall, return wall, or toe wall is the downturned edge at the outer end of a culvert inlet or outlet floor, flume, or flume basin. For sites that are difficult to excavate and dewater, construction personnel may allow the contractor the option of using sheet piling. See *Construction Manual,* Article 11.82 [BDM 7.1.5.2].

Double and Twin are interchangeable terms for two parallel box culvert barrels. Twin is the more traditional term and is found on standard plans.

Drop inlet is an inlet device that minimizes right-of-way by elevating a ditch or by reducing head-cutting of a draw upstream. A drop inlet typically is 3 to 20 feet tall.

Effective floor thickness is the thickness of the cast-in-place culvert barrel floor or headwall apron after an assumed two-inch thick mud mat is deducted. The effective floor thickness is used in structural design of the floor.

Effective slab thickness is the thickness of the cast-in-place culvert slab after an assumed half-inch built-in (or integral) wearing surface is deducted when the slab also serves as the roadway surface. The effective slab thickness is used in structural design of the slab.

End wall is placed between headwall wings at a reinforced concrete box culvert or pipe culvert inlet to reduce right-of-way, to allow a location for tile outlets, or to match a streambed elevation for a culvert that is buried for environmental reasons or is buried to get below the road grade elevation. An end wall typically is one to two feet tall.

Fill height indicates the amount of soil above the top slab of the culvert. This dimension also is termed earth cover in ASTM C1577.

Floor (or base slab or footing) is the bottom slab in the barrel of a box culvert. The Iowa floor profile provides level surfaces on each side of a wall for placement of wall forms and a recess between them, which is called a frost trough. Iowa has used this frost trough profile rather than a flat floor since the 1930s.

Flume or flume chute is the parabolically curved device between parallel wings at a culvert outlet that provides a significant drop in elevation from culvert floor to downstream streambed elevation. Usually a flume terminates at a flume basin but, in some cases, a stub flume without a basin may be appropriate.

Flume basin is at the end of a flume chute and is typically buried 5 feet below streambed elevation. A flume basin helps contain the scour resulting from the energy dissipated from the flume.

Frost trough (or flow channel) refers to the depression in the floor of a reinforced concrete box culvert barrel. Generally, the frost trough detail has been used by the Bureau since the 1930s. The frost trough is omitted in cases where a box culvert is used as a pedestrian underpass.

Headwalls include the parapet, wings, apron, and curtain wall.

Height (H) is measured inside the culvert barrel from underside of slab to top of floor at a wall in a cast-in-place box. Typically, a frost trough depression is 4 inches below the start of the height dimension.

Interior wall is a wall between barrels in a twin or triple reinforced concrete box culvert. In a twin culvert the interior wall also may be called a center wall. Interior walls extend onto the apron at both ends of the culvert to strengthen the end section, protect the interior barrel wall, and channelize debris.

Length of a reinforced concrete cast-in-place or precast box culvert is measured back to back of parapets. On the Bureau standard plans the precast box culvert parapets are referred to as lintel beams.

Mud mat is the bottom 2 inches of concrete in a cast-in-place box culvert floor. The mud mat is neglected in structural design.

Parapet is the upturned edge of the top slab at the end of a culvert barrel. It may also be called a lintel beam.

Reinforced concrete box (RCB), without further description, usually refers to a cast-in-place, reinforced concrete box culvert. This terminology developed in the Bureau before precast box culverts were available. In a few cases context will indicate that reinforced concrete box refers to both cast-in-place and precast box culverts. In this manual section the term “precast” will be added to specifically indicate a precast reinforced concrete box.

Scour floor is a slab placed between reinforced concrete box culvert headwalls near their ends at the outlet but below the apron.

Slab or top slab is the top of a reinforced concrete box culvert.

Span (S) is measured across the culvert barrel from inside surface of wall to inside surface of wall.

Stabilization berm is constructed at the toe of an embankment slope to provide a counterweight to resist a deep rotational slope failure. It generally has the effect of lengthening a culvert because the culvert needs to be extended through the stabilization berm.

Tapered inlet is a slope tapered inlet used to increase capacity of a culvert designed for inlet control. See Figure 7.2.4.7.5.

Triple is the term for three parallel box culvert barrels.

Wing or wing wall refers to each of the pair of flared or parallel walls at the inlet or outlet of a reinforced concrete box culvert.

7.1.4 Abbreviations and notation

[AASHTO-LRFD 1.3.2.1, 3.6.1.1.2, 5.7.2.8, 5.7.3.4.2]

CMP, corrugated metal pipe

d_v, effective shear depth (inches) [AASHTO-LRFD 5.7.2.8]

H, height measured inside the culvert barrel from underside of slab to top of floor at a wall

Iowa DNR, Iowa Department of Natural Resources

MCFT, modified compression field theory [AASHTO-LRFD 5.7.3.4.2]

MPF, multiple presence factor [AASHTO-LRFD 3.6.1.1.2]

PEP, polyethylene pipe

RCB, reinforced concrete box

RCE, resident construction engineer

RCP, reinforced concrete pipe

S, span measured across the culvert barrel from inside surface of wall to inside surface of wall

SU8, the notional rating load (truck) given on page 6-67 of *The Manual for Bridge Evaluation, First Edition*

TS&L, type, size, and location

η_i, load modifier [AASHTO-LRFD 1.3.2.1]

7.1.5 References

7.1.5.1 Direct

Throughout the culvert section there are frequent, direct references to specific portions of standards and publications. Direct references are included in brackets [ ] using the abbreviations given below. Applicable references to the AASHTO LRFD Specifications and, in a few cases, to the Standard Specifications are given with each article heading.

Although the latest editions are listed below there are some circumstances in which referenced documents have been prepared on the basis of previous editions.

[AASHTO division article, table, or figure] refers to AASHTO *Standard Specifications for Highway Bridges, 17th Edition (2002)* with current errata changes - design, seismic design, or construction division with article, table, or figure number.

[AASHTO-LRFD article, table, or figure] refers to *AASHTO LRFD Bridge Design Specifications, 5th Edition (2010)* with article, table, or figure number.

[BDM article, table, figure, or note] refers to *LRFD Bridge Design Manual* with article, table, figure, or plan note number. (Available on the Internet at http://www.iowadot.gov/bridge/manuallrfd.htm)

[IDOT SS article] refers to Iowa Department of Transportation *Standard Specifications for Highway and Bridge Construction, Series 2009* with article number. (Available on the Internet at: http://www.iowadot.gov/erl/current/GS/Navigation/nav.pdf/)

[BSB SS sheet number] refers to a Bridges and Structures Bureau (BSB), “Standard Sheet” with sheet number. (Available on the Internet at: http://www.iowadot.gov/bridge/v8ebrgstd.htm)

[DB DM article, table, or figure] refers to the Design Bureau, *Design Manual* with article, table, or figure number. (Available on the Internet at: http://www.iowadot.gov/design/dmanual/manual.html?reload)

[DB RDD sheet number] refers to the Design Bureau, “Road Design Details” with sheet number. Formerly the detail manual was referred to as the “green book.” (Available on the Internet at: http://www.iowadot.gov/design/desdet.htm)

[DB SRP sheet number] refers to an Design Bureau, “Standard Road Plan” with sheet number. Formerly the plan manual was referred to as the “red book.” (Available on the Internet at: http://www.iowadot.gov/design/stdrdpln.htm)

[CMB IM number] refers to Construction and Materials Bureau, Iowa Department of Transportation Instructional Memorandum number. (Available on the Internet at: http://www.iowadot.gov/erl/current/IM/Navigation/nav.pdf)

7.1.5.2 Indirect

Indirect references are general and infrequent sources of information that usually are not linked with specific article or section numbers.

American Association of State Highway and Transportation Officials (AASHTO). *Highway Drainage Guidelines, 4th Edition.* Washington: AASHTO, 2007.

American Association of State Highway and Transportation Officials (AASHTO). *Manual for Bridge Evaluation, First Edition.* Washington: AASHTO, 2008.

American Association of State Highway and Transportation Officials (AASHTO). *Roadside Design Guide, 4th Edition 2011.* Washington: AASHTO, 2008.

American Concrete Institute (ACI). *Building Code Requirements for Structural Concrete (ACI 318-11) and Commentary (ACI 318R-11).* Farmington Hills: ACI, 2011.

American Galvanizers Association. *GalvaSource.* Aurora: American Galvanizers Association, 2011 (Available on the Internet at: http://www.galvanizeit.org/images/uploads/publicationPDFs/North_American_Galvanizers_Listing.pdf)

American Institute of Steel Construction (AISC). *Steel Construction Manual, Fourteenth Edition.* Chicago: AISC, 2011.

American Society for Testing and Materials (ASTM). *2001 Annual Book of ASTM Standards*. West Conshohocken: ASTM, 2001.

Kirkham Michael, *US20 Precast Culvert Settlement Monitoring: Woodbury & Ida Counties*. Final Report prepared for the Iowa DOT (unpublished), September 6, 2018.

Construction and Materials Bureau. *Construction Manual.* Ames: Construction and Materials Bureau, Iowa Department of Transportation, 2011. (Available on the Internet at: http://www.erl.dot.state.ia.us/)

Sicking, D.L., R.W. Bielenberg, J.R. Rohde, J.D. Reid, R.K. Faller, and K.A. Polivka. “Safety Grates for Cross-Drainage Culverts. *Transportation Research Record 2060-08.* Transportation Research Board, National Research Council, Washington, DC, 2008.

Sunday, Wayne and Kyle Frame. *New Bridge Construction Handbook.* Ames: Construction and Materials Bureau, Iowa Department of Transportation, 2000. (Available on the Internet at: http://www.iowadot.gov/construction/structures/bridge_construction_handbook.pdf)

7.2 Reinforced concrete box (cast-in-place)

Following are the plan development guidelines for projects that include cast-in-place culverts.

- Preliminary Bridge shall prepare the preliminary design (TS&L) for a cast-in-place culvert length. If the culvert structure is a candidate for either a precast or cast-in-place culvert, Preliminary Bridge will prepare the preliminary design (TS&L) for the cast-in-place culvert alternate. Refer to Section 7.3 for further information concerning the precast alternate.
- Preliminary Bridge should note the following when determining the cast-in-place culvert length:
    - The foreslope for a cast-in-place culvert should intercept the top of the parapet as shown in Figure 7.2.
    - The overall length for the cast-in-place culvert should be adjusted so it is a whole foot length (converted to meters) needed to achieve the minimum back to back parapet length.
    - For parallel wing headwalls show Class E revetment around both headwalls as shown on the standard sheet [BSB SS 1092].

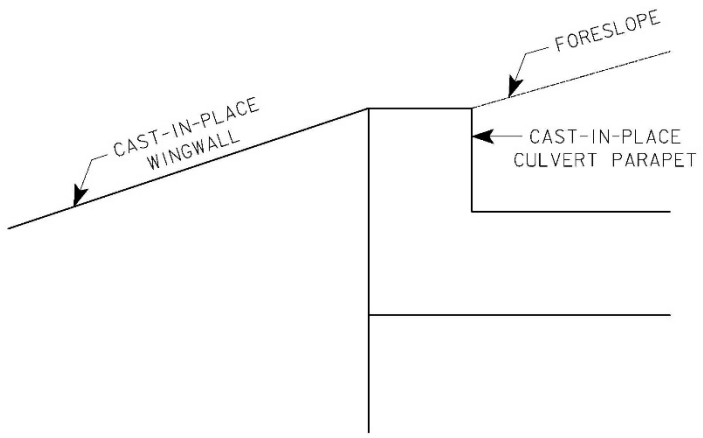

Figure 7.2. Foreslope-parapet intersection diagram

7.2.1 Loads

[AASHTO-LRFD C12.6.1]

Except in very unusual cases there will be no barrier rail or headwall components exposed to potential vehicular collision [AASHTO-LRFD C12.6.1], and thus the vehicular collision load (CT) may be neglected in the design of typical reinforced concrete box (RCB) culvert components.

The configuration of typical RCB culverts is such that ice does not have a significant loading effect, and the designer may neglect ice load (IC).

For lateral pressures on culvert barrel walls and wings, the designer shall assume earth pressure at rest, except in the unusual case where wings are detached. In that case the designer may assume active soil pressure.

For typical skewed, rectangular or square reinforced concrete box (RCB) culverts and their components the designer may neglect the overall effects of unbalanced horizontal load. For skews greater than 45 degrees, however, the designer should consider the effects of imbalance in horizontal loads at culvert ends because the imbalance may cause a significant sliding force.

7.2.1.1 Dead

[AASHTO-LRFD 3.5.1, 12.6.1, 12.11.2.2.1]

Self-weight (DC) shall be applied in the design of all reinforced concrete box (RCB) culvert components except floors. Pavement weight (DW) and earth fill weight (EV) shall be applied when applicable in the design of RCB barrels. The designer shall determine the loads from the following:

- Culvert self-weight (DC): 0.150 kcf
- Pavement weight (DW): 0.150 kcf for concrete or as given for other pavement materials in the AASHTO LRFD Specifications [AASHTO-LRFD Table 3.5.1-1] and applied as a surcharge load, and
- Earth fill weight (EV): 0.120 kcf for dry soil, unless more specific information is available.

Height of fill is measured from top of pavement to top of culvert. If there is pavement above the culvert without fill, apply the pavement load, and consider fill height to be 0 feet. For fill heights greater than 2 feet, round fill heights to the nearest foot. In some cases, especially with stabilization berms, there will be multiple fill heights, and the culvert will need to be analyzed and designed for several heights. As with barrel extensions [BDM 7.2.3.3] the designer should consider the option of varying the barrel design to fit the different load conditions.

The earth fill load should be modified for soil-structure interaction [AASHTO-LRFD 12.11.2.2.1]. Except for unusual site conditions that require trench installation the designer shall use the soil-structure interaction factor for embankment installation.

When developing load combinations for culvert barrels, the designer shall apply the maximum or minimum load factor to the earth fill weight [AASHTO-LRFD 12.6.1], depending on the objectives of the load combination.

7.2.1.2 Live

[AASHTO-LRFD 3.6.1.2.6, 3.6.1.3.3, 4.6.2.10, 12.11.2.1]

The designer shall apply HL-93 vehicular live load (LL) to culvert barrels as required by the AASHTO LRFD Specifications and, whenever LL is applied and the objective of the load combination is to maximize horizontal pressure, the designer shall also apply live load surcharge (LS). The designer need not apply the HL-93 lane load if using the approximate strip method for analysis [AASHTO-LRFD 3.6.1.3.3]. The designer shall apply LL to parapets in an extreme event limit state as indicated at the end of this article.

For box culvert barrels, live load is treated differently depending on the direction of traffic with respect to the culvert and depending on the amount of fill [AASHTO-LRFD 12.11.2.1]. For typical box culverts, except for skew angles greater than 45 degrees, traffic primarily will be parallel with the barrel span and AASHTO LRFD Case I will apply [AASHTO-LRFD 4.6.2.10.2].

For typical box culverts with less than 2.0 feet of fill, the designer shall apply wheel loads from the HL-93 vehicles using 20-inch wide by 10-inch long tire patches [AASHTO-LRFD 4.6.2.10] and shall distribute the live load based on the height of fill using a fill interaction factor (i.e. live load distribution factor) of 1.15.

The designer shall distribute live loads parallel with the span. For twin and triple barrel culverts the span of a single cell shall be used In the AASHTO LRFD formula for the distribution width perpendicular to the span [AASHTO LRFD Eq. 4.6.2.10.2-1].

When the fill height is 2.0 feet or greater, the designer shall follow the guidelines for distribution of wheel loads through earth fills [AASHTO-LRFD 3.6.1.2.6]. The designer shall distribute the live load based on the height of fill using a fill interaction factor (i.e. live load distribution factor) of 1.15. The designer shall consider a wheel load to be distributed uniformly over a 20-inch wide by 10-inch long tire patch. If the load distribution from live load plus dynamic load allowance based on distribution through an earth fill exceeds the load distribution determined from Case I above, the designer shall use the lower, Case I load distribution for determining moment, thrust, and shear.

Generally the designer should apply live load as follows:

- Run the HL-93 vehicles forward and backward.
- For fills less than 2 feet, apply HL-93 vehicular loads in a single lane with the appropriate multiple presence factor (MPF).
- For fills 2 feet and greater, apply HL-93 vehicular loads in one or more lanes with appropriate MPFs.

For single box culverts, when the fill height exceeds both 8 feet and the span length, live load effects may be neglected [AASHTO-LRFD 3.6.1.2.6]. For twin and triple culverts, only when the fill height exceeds the distance between the inside faces of end walls may the live load be neglected.

During development of CulvertCalc IA software the notional rating load, SU8 truck, was checked for all of the standard reinforced concrete box designs. The SU8 truck never controlled the design.

For a reinforced concrete box culvert parapet the designer shall assume a modified extreme event, in which the full force of an HL-93 truck wheel impacts the parapet as follows.

- Single 16-kip wheel load
- Multiple presence factor 1.20
- Load factor 1.00 (not 1.75)
- Dynamic load allowance 1.33

7.2.1.3 Dynamic load allowance

[AASHTO-LRFD 3.6.2.2]

The designer shall apply dynamic load allowance (IM) with the HL-93 truck and tandem in the design of culvert barrels and IM with the HL-93 truck wheel load in the design of culvert parapets.

For fill heights less than 8 feet, the designer shall determine the dynamic load allowance (IM) from the AASHTO LRFD Specifications [AASHTO-LRFD 3.6.2.2]. No dynamic load allowance is required when the fill height is greater than 8 feet.

7.2.1.4 Water

[AASHTO-LRFD 3.7.3.1]

The designer shall apply water loads (WA) to culvert barrels, aprons, and curtain walls as discussed below.

The designer shall check a culvert barrel with internal water pressure (WA) considering the culvert to be completely full, along with maximum downward load and minimum horizontal inward load. The designer also shall check the culvert without internal water pressure considering the culvert to be empty, along with minimum downward load and maximum inward horizontal load.

The designer shall consider buoyancy in loading of the apron.

Although there is no usual lateral water load on a culvert curtain wall, soil may be scoured away in front of the wall. To consider that condition the designer shall check the design of the wall for a stream pressure load of 15 ft/s [AASHTO-LRFD 3.7.3.1].

7.2.1.5 Earth pressure

[AASHTO-LRFD 3.4.1, 3.11.5.5, 3.11.6.4, 3.11.7]

The designer shall apply horizontal earth pressure (EH) to culvert barrel walls, wing walls, and parapets.

Unless more site-specific information is available or the Soils Design Unit recommends otherwise, the designer may use horizontal earth pressures (EH) based on equivalent fluid weights of 0.060 kcf and 0.030 kcf for barrels, wings, and parapets. This equivalent fluid loading is based on free-draining backfill [AASHTO-LRFD 3.11.5.5]. The lower fluid weight should not be combined with the minimum load factor assigned for horizontal earth pressures [AASHTO-LRFD 3.11.7, Table 3.4.1-2]; therefore, use a load factor of 1.00 with the 0.030 kcf minimum load.

For load cases with live load and the objective to maximize horizontal pressure the designer shall apply to culvert barrel walls a uniform horizontal pressure from live load surcharge (LS) as for abutments perpendicular to traffic [AASHTO-LRFD Table 3.11.6.4-1]. For the culvert barrel the “abutment height”

shall be taken from the top of pavement to bottom of floor, and the equivalent height then interpolated from the AASHTO LRFD table.

7.2.1.6 Construction

Reserved.

7.2.2 Load application

7.2.2.1 Load modifier

[AASHTO-LRFD 1.3.2, 3.4.1, 12.5.4]

Factored loads shall be adjusted by the load modifier, η_i, which is the product of modifiers for ductility, redundancy, and operational importance [AASHTO-LRFD 1.3.2, 3.4.1]. For typical cast-in-place or precast reinforced concrete culverts the modifiers for ductility and operational importance shall be taken as 1.0. For dead load, live load, dynamic load allowance, and construction loads the modifier for redundancy shall be taken as 1.0, but for earth loads EH_{max} and EV_{max} only, the modifier for redundancy shall be taken as 1.05 [AASHTO-LRFD 12.5.4].

7.2.2.2 Limit states

[AASHTO-LRFD C12.5.3]

Buried structures such as box culverts are shielded from many typical bridge loads. As a result, typical box culverts need to be investigated only as follows:

- Service I for crack control
- Strength I for flexure, compression, and shear

The designer need not investigate the fatigue limit state [AASHTO-LRFD C12.5.3].

7.2.3 Analysis and design

Cast-in-place reinforced concrete box (RCB) culverts shall be designed structurally by the load and resistance factor design (LRFD) method. For design conditions that do not fit the available standard designs, such as variable fill over the length of a RCB culvert barrel, the Bureau prefers that the designer use CulvertCalc IA, LRFD software on which the standard culvert barrel designs are based.

RCB culverts less than 3 feet by 3 feet in cross section are not economical, and the designer should consider pipe culverts for relatively small cross sections. For RCB barrels and headwalls the following minimum thicknesses apply:

- Slab: 8 inches
- Walls: the larger of 9 inches or one inch per foot of clear height, H
- Floor: 10 inches, which includes a 2-inch mud mat that is not considered structural
- Apron: 11 inches, which includes a 2-inch mud mat that is not considered structural

Unless otherwise specified, cast-in-place reinforced concrete materials shall be:

- Normal weight reinforced concrete with unit weight of 0.150 kcf,
- Class C concrete with f'_c = 4 ksi, and
- Grade 60 reinforcement with f_y = 60 ksi.

When the Soils Design Unit or geotechnical consultant does not provide site-specific information the designer should use the following cohesionless soil properties in design.

- Angle of internal friction (φ) 30 degrees
- Unit weight of saturated soil 0.135 kcf

- Unit weight of dry soil 0.120 kcf
- Unit weight of water 0.0624 kcf

In general, the designer should model components of box culverts using typical 12-inch wide strips for analysis and design.

7.2.3.1 Barrels

[AASHTO-LRFD 3.4.1, 4.6.2.1.4, C5.6.3.2, 5.6.3.3, 5.6.7, 5.6.4.2, 5.7.3.4.1, 5.10.6, 5.12.4.1, 5.12.7.3, 12.5.5, 12.11.2.1, C12.11.3, 12.11.4.2, 12.11.4.3.1]

The designer shall develop Strength I and Service I load combinations for design of RCB barrels. As a minimum, the factored load combinations shall include: (1) maximum vertical and minimum horizontal load, (2) minimum vertical and maximum horizontal load, and (3) maximum vertical and maximum horizontal load. The designer shall use AASHTO LRFD maximum and minimum load factors for dead load and earth pressure [AASHTO-LRFD Table 3.4.1-2], except that the minimum load factor for earth pressure (EH) should be taken as 1.00 [BDM 7.2.1.5]. For typical barrels the designer may apply lateral loads under balanced conditions so that there are no sliding forces.

The designer should model the culvert barrel as a slice through the barrel, a 12-inch wide rigid frame with sidesway that will occur only with unsymmetrical live load. The frame should be idealized with members at the centerlines of slab, walls, and floor. Section properties shall not include corner fillets, the mud mat below the floor, or the integral wearing surface used when the roadway is on the top slab.

The designer should design a barrel wall for the larger of the computed moments or the moment from a minimum axial load eccentricity (e):

$$e = 0.6 + 0.03H \geq 1.0 \text{ inch}$$

There are two options that the designer may consider for the soil pressure below the floor: uniform or linearly varying based on unsymmetrical loads, as for a rigid body. The standard culvert barrel designs are based on the second option. For significantly unsymmetrical loads the rigid body analysis option will indicate negative soil pressure (tension) below part of the floor, which may be assumed to exist for the analysis. The designer does not need to consider skew effects when the skew is 45 degrees or less.

The reinforcing pattern for the rigid frame generally should follow the standard culvert barrel designs. Single barrels are designed with straight, full length bars on the inside of the slab, walls, and floor; partial length bars on the outside of slab and floor; and spliced full-length bars on the outside of walls. Double and triple barrels are designed with straight short and full-length bars inside; short and full length bars outside; spliced full length bars in outside walls; and full length bars in interior walls. Guidelines for bar identification and detailing are given in the reinforcement article [BDM 7.2.4.4.4].

Review the reinforcement article [BDM 7.2.4.4.4] and consider the following when selecting reinforcement:

- Provide shrinkage and temperature reinforcement on the inside faces of culvert slabs, walls, and floors and in the top of the slab for culverts with no fill [AASHTO-LRFD 5.10.6].
- For a culvert barrel slab with 2 feet or less of fill, provide transverse distribution reinforcement in the bottom of the slab [AASHTO-LRFD 5.12.4.1].

The designer shall use the flexure and shear resistance factors given in the AASHTO LRFD Specifications for reinforced concrete cast-in-place box structures [AASHTO-LRFD Table 12.5.5-1].

When determining tension reinforcement for flexure, the designer shall neglect reinforcement on the compression side. Set $\rho_{max} = 0.634\rho_{balanced}$ to ensure a tension controlled section with $\varphi = 0.90$. The designer shall provide minimum reinforcement for flexure [AASHTO-LRFD 12.11.4.3.1, 5.6.3.3].

When determining the maximum negative moment reinforcement, the designer shall use the moment at the section where the combined depth of the uniform member (slab or wall) and haunch is 1.5 times the thickness of the member [AASHTO-LRFD C5.6.3.2.1]. See below for the definition of the haunch in a floor with a frost trough. The Bureau does not use the optional location for maximum negative moment in culverts [AASHTO-LRFD 12.11.4.2].

For the transverse edges of a culvert barrel slab with less than 2 feet of fill, except at the parapets, the designer shall check the need for an edge beam [AASHTO-LRFD 12.11.2.1, 4.6.2.1.4b]. Typically an edge beam will not be required and, in that case, the designer shall provide extra reinforcement by spacing reinforcement at 3 inches, 4.5 inches, and 4.5 inches from the end. The additional edge reinforcement also may require adjustment of wall reinforcing.

The designer shall consider compression forces in design of culvert barrel walls but need not consider compression forces in design of the slab and floor. The designer need not consider slenderness effects in design of box culvert barrel walls.

Based on past practice the Bureau limits the maximum percentage of vertical reinforcement in walls to 4%. The minimum percentage of vertical reinforcement may be based on a reduced effective area [AASHTO-LRFD 5.6.4.2], but the effective area shall not be less than 50% of the gross area. The reduced area, as well as the gross area, shall be capable of resisting all applicable load combinations.

The designer shall check shear at a distance d_v from the end of a corner haunch for all barrel members except for slabs with less than 2 feet of fill, in which case the designer shall check at the end of the haunch. The haunch in a floor with a frost trough should be defined as a 45-degree haunch with a size the smaller of the (1) vertical or (2) sum of horizontal dimensions (a relatively unlikely case).

After considerable study of the AASHTO LRFD Specifications and research publications and numerous trial runs of CulvertCalc IA the Bureau has decided to use the following concrete shear resistances for standard designs, and these resistances should be used for special designs. The Bureau does not use shear reinforcement.

- Single box, slab and floor, less than 2 feet of fill [AASHTO-LRFD 5.7.3.4.1]

$$v_c = 2\sqrt{f'_c}(psi) = 0.0632\sqrt{f'_c}(ksi)$$

- Single box, slab and floor, 2 feet or more of fill [AASHTO-LRFD 5.12.7.3]

$$v_c = 2.14\sqrt{f'_c} + 4600\rho\frac{V_u d}{M_u}(psi) = 0.0676\sqrt{f'_c} + 4.6\frac{A_s}{bd_e}\frac{V_u d_e}{M_u}(ksi)$$

$$v_c \geq 3\sqrt{f'_c}\,(psi) = 0.0948\sqrt{f'_c}\,(ksi)$$

$$v_c \leq 4\sqrt{f'_c}\,(psi) = 0.126\sqrt{f'_c}\,(ksi)$$

Note: $V_u d_e/M_u \leq 1.0$

- Single box, walls [AASHTO-LRFD 5.7.3.4.1]

$$v_c = 2\sqrt{f'_c}\,(psi) = 0.0632\sqrt{f'_c}(ksi)$$

- Double and triple box, slab and floor, less than 2 feet of fill [AASHTO-LRFD 5.7.3.4.1]

$$v_c = 2\sqrt{f'_c}\,(psi) = 0.0632\sqrt{f'_c}(ksi)$$

- Double and triple box, slab and floor, 2 feet or more of fill [AASHTO-LRFD 5.12.7.3]

$$v_c = 2.14\sqrt{f'_c} + 4600\rho\frac{V_u d}{M_u}\,(psi) = 0.0676\sqrt{f'_c} + 4.6\frac{A_s}{bd_e}\frac{V_u d_e}{M_u}(ksi)$$

$$v_c \leq 4\sqrt{f'_c}\,(psi) = 0.126\sqrt{f'_c}\,(ksi)$$

Note: $V_u d_e/M_u \leq 1.0$

- Double and triple box, walls [AASHTO-LRFD 5.7.3.4.1]

$$v_c = 2\sqrt{f'_c}\,(psi) = 0.0632\sqrt{f'_c}(ksi)$$

For a special project for which the designer has approval to use modified compression field theory (MCFT) [AASHTO-LRFD 5.7.3.4.2] in lieu of the shear resistances above, the maximum aggregate size should be taken as ¾ inch.

The designer shall use the smaller of the actual clear cover or 2.25 inches when checking crack control [AASHTO-LRFD 5.6.7]. The designer may consider thrust to reduce crack control requirements [AASHTO-LRFD C12.11.3]. Crack control exposure factor shall be taken as 1.00 except when the roadway is on the top slab, in which case the exposure factor shall be taken as 0.75.

7.2.3.2 Headwalls

[AASHTO-LRFD 5.10.6]

All headwall components shall be designed for crack control with an exposure factor of 1.00. The designer shall provide shrinkage and temperature reinforcement for all exposed surfaces [AASHTO-LRFD 5.10.6].

7.2.3.2.1 Wings

The designer shall develop Strength I and Service I load combinations for maximum effects for design of RCB wings. Unless wings are isolated from the culvert barrel, earth pressure should be based on the at-rest condition (K_o = 0.500) because the wings are supported laterally at the culvert barrel. The back slope for determining earth pressure should be based on the skew of the wall with respect to the typical 3:1 (horizontal to vertical) highway foreslope. Load combinations need not include live load surcharge (LS).

The typical culvert wings should be modeled with vertical 12-inch wide strips. At the barrel the wing strip may be idealized as a propped cantilever, and from the three-quarter height location to the end may be idealized as a cantilever.

The designer should consider reducing vertical reinforcement at mid-length of a wing. Horizontal reinforcement shall extend into the barrel beyond the back of the parapet the larger of (1) 2 feet or (2) a Class B lap splice.

7.2.3.2.2 Parapet

In addition to dead load and earth pressure in Strength I and Service I, the designer shall apply the live load of an HL-93 truck wheel in a modified extreme event limit state [BDM 7.2.1.2].

Minimum longitudinal reinforcement in a parapet shall be 2 - #7 with minimum transverse #4 bent bars at 6 inches.

When the culvert barrel slab thickness joining the headwall is greater than 18 inches, the headwall parapet height shall be extended so the top of the parapet is a minimum of 6 inches above the culvert barrel slab. The extended height of the parapet shall be to the nearest whole inch. This detail is available as a cell and shall be completed for the headwall size and included in the plans in lieu of a modified headwall standard sheet.

7.2.3.2.3 Apron

For the apron in Strength I and Service I limit states, in addition to the effects of loads caused by frame action from the wings, the designer shall consider buoyant forces [BDM 7.2.1.4].

Reinforcement in the top of the apron should be adequate to resist at least $1.2M_{cr}$, which often controls.

7.2.3.2.4 Curtain wall

Generally there is no horizontal load on the curtain wall but, to design conservatively in case there is streambed scour, in Strength I and Service I the designer shall assume a steam flow design pressure [BDM 7.2.1.4].

For sites that are difficult to excavate and dewater, construction personnel may allow the contractor the option of using sheet piling in place of the reinforced concrete curtain wall. See *Construction Manual,* Article 11.82 [BDM 7.1.5.2].

7.2.3.3 Barrel extensions

At sites where the shoulder slopes are being improved for safety reasons or where additional traffic lanes are being added, culverts are replaced or extended. For extensions of single box culverts the Bureau has three standard sheets [BSB SS 1043, 1044, and 1047]. The first standard [BSB SS 1043] has two sheets that are for all single barrel extensions, the second [BSB SS 1044] is for extensions to single barrel

culverts with existing flared headwalls, and the third [BSB SS 1047] is for parapet and transition details. Guidelines for use of the standard sheets are given in the standard plans article [BDM 7.2.4.1].

As a general rule the culvert extension should be designed for the same loads as a new culvert and for the maximum height of either existing or new fill. This will ensure that the extension will be adequately designed should the roadway be widened again at some future date.

If traffic will ride directly on the extension slab, the slab must be designed accordingly, and the slab steel must be epoxy coated. Also, the designer shall add corbels to the walls to support the approach pavement [BDM 7.2.4.5.1].

When skewed culverts are extended, the transverse bars and corner bars may be placed parallel with the skewed headwall. When this occurs, the designer shall account for the increased span length. See the detailing article for additional information [BDM 7.2.4.9].

7.2.3.4 Flumes and flume basins

The Bureau prefers that the designer use standard flume and flume basin designs [BSB SS 1070-03 to 1079-14]. For special designs, unless site conditions clearly indicate otherwise, the designer should assume a 2:1 horizontal to vertical back slope for flume and flume basin design. See the detailing article for additional information [BDM 7.2.4.8.1].

7.2.3.5 Other

A slope tapered inlet is designed for the span at the back face of the parapet and one foot of fill, which ensures a conservative design. See the detailing article for additional information [BDM 7.2.4.7.5].

7.2.4 Detailing

7.2.4.1 Standard plans

In April 2012 the Bureau released new RCB Culvert Standards designed according to the AASHTO LRFD Specifications and interpretations and policies given in this section of the Bridge Design Manual. The general categories of standard sheets are outlined below.

Single Reinforced Concrete Box Culvert Standards

- RCB: General information and barrel details
- PWH: Parallel wing headwalls
- CBJ: Culvert bell joints

Twin Reinforced Concrete Box Culvert Standards

- TWRCB: General information and barrel details
- TWH: Flared wing headwalls
- TWCBJ: Culvert bell joints

Triple Reinforced Concrete Box Culvert Standards

- TRRCB: General information and barrel details
- TRH: Flared wing headwalls
- TRCBJ: Culvert bell joints

These RCB Culvert Standards are quite similar to previous standards except that the headwalls for single RCBs are parallel rather than flared.

Following are guidelines for use of the standards for new culvert designs and culvert extension designs.

Case 1: New culvert, standard size, standard fill height, all skews

- Develop front sheet with additional culvert notes not listed on appropriate G1-20 Sheet.

- Refer to RCB Culvert Standards for barrel and headwall details, or detail appropriate inlet.

Case 2: New culvert, standard size, non-standard fill height

- Develop front sheet with culvert notes.
- Modify the appropriate barrel standard sheet, deleting all data and details that do not apply to the project, and include the sheet in the plans.
- Refer to RCB Culvert Standards for headwall details, or detail appropriate inlet.

Case 3: New culvert, non-standard size

- Develop front sheet with culvert notes.
- Modify the appropriate barrel standard sheet, deleting all data and details that do not apply to the project, and include the sheet in the plans.
- Modify the appropriate headwall details sheet, and include the sheet in the plans, or detail appropriate inlet.

Case 4: Culvert extension, standard size, standard fill height, 0-degree skew

- Use Standard Sheets 1043s1 and 1043s2 for front sheet.
- Use Standard Sheet 1047 for detailing concrete transition details.
- Refer to RCB Culvert Standards for barrel and headwall details, or detail appropriate inlet.

Case 5: Culvert extension, standard size, non-standard fill height, 0-degree skew

- Use Standard Sheets 1043s1 and 1043s2 for front sheet.
- Use Standard Sheet 1047 for detailing concrete transition details.
- If additional barrels are required, modify the appropriate barrel standard sheet, deleting all data and details that do not apply to the project, and include the sheet in the plans.
- Refer to RCB Culvert Standards for barrel and headwall details, or detail appropriate inlet.

Case 6: Culvert extension, non-standard size, 0-degree skew

- Use Standard Sheets 1043s1 and 1043s2 for front sheet.
- Use Standard Sheet 1047 for detailing concrete transition details.
- If additional barrels are required, modify the appropriate barrel standard sheet, deleting all data and details that do not apply to the project, and include the sheet in the plans.
- Modify the appropriate headwall details sheet, and include the sheet in the plans, or detail appropriate inlet.

Case 7: Culvert extension, standard size, standard fill height, skewed

- Use Standard Sheets 1043s1 and 1043s2 for front sheet.
- Use Standard Sheet 1044 for detailing existing culvert junction section.
- Use Standard Sheet 1047 for detailing concrete transition details.
- Refer to RCB Culvert Standards for remaining barrel details, if applicable.
- Refer to RCB Culvert Standards for headwall details, or detail appropriate inlet.

Case 8: Culvert extension, standard size, non-standard fill height, skewed

- Use Standard Sheets 1043s1 and 1043s2 for front sheet.
- Use Standard Sheet 1044 for detailing existing culvert junction section.
- Use Standard Sheet 1047 for detailing concrete transition details.
- If additional barrels are required, modify the appropriate barrel standard sheet, deleting all data and details that do not apply to the project, and include the sheet in the plans.
- Refer to RCB Culvert Standards for headwall details, or detail appropriate inlet.

Case 9: Culvert extension, non-standard size, skewed

- Use Standard Sheets 1043s1 and 1043s2 for front sheet.
- Use Standard Sheet 1044 for detailing existing culvert junction section.
- Use Standard Sheet 1047 for detailing concrete transition details.
- If additional barrels are required, modify the appropriate barrel standard sheet, deleting all data and details that do not apply to the project, and include the sheet in the plans.
- Modify RCB Culvert Standards for headwall details, or detail appropriate inlet.

The designer or detailer shall discuss all unusual situations with the supervising Unit Leader.

7.2.4.2 Software

The standard plans have been designed with CulvertCalc IA, LRFD software that follows the design and detailing policies of the Bureau. For design of a nonstandard reinforced concrete box culvert the Bureau requires that the designer use CulvertCalc IA, unless the nonstandard condition does not fit within the parameters of the software. The designer shall discuss unusual design conditions with the supervising Unit Leader.

7.2.4.3 Plan preparation

When preparing plans for RCBs, the designer and detailer should set culvert lengths to the nearest one foot.

For new and replacement RCB culverts, the designer shall determine the NBIS structure length and provide an appropriate note on the TS&L stating the length. Refer to BDM 3.2.1 for guidance on calculating NBIS structure length. The cast-in-place and precast alternates for a site could have different NBIS structure lengths and each shall be noted on the TS&L for that alternate.

7.2.4.4 General

7.2.4.4.1 Excavation

Excavation quantities for culverts are determined differently depending on whether the culvert is new or is an extension and whether there are low areas along the culvert that require fill. If the culvert is new, the Iowa DOT Standard Specifications require that Class 20 excavation be computed using a width 4 feet greater than the inside width of the culvert and using side slopes of 1:1 horizontal to vertical [IDOT SS 2402.04, B, 4]. When concrete curtain walls are present additional Class 20 excavation shall be computed for each curtain wall assuming the culvert excavation extends 2 feet forward from the back of the curtain wall at its base and extends upward on a vertical plane.

For culvert extensions, the quantity of Class 20 excavation is to be computed using a width 4 feet greater than the inside width of the culvert and using vertical planes parallel with the boundaries of the structure. For long extensions where additional lanes are added and the amount of Class 20 excavation would be similar to the amount for new culverts, the excavation should be calculated with side slopes of 1:1 horizontal to vertical as for new culverts. For long culvert extensions the designer shall include notes or details in the plans describing how the Class 20 excavation was calculated.

Any Class 10 channel excavation associated with revetment installation at culvert inlets and outlets shall be included in Road Design’s quantities based on items shown in the preliminary TS&L. See BDM Article 4.5.8 for additional information.

Occasionally low areas will exist along the proposed culvert. If these areas are large, usually the road contractor is required to place Class 10 fill before the culvert contractor is allowed to begin construction.

If areas to be filled are relatively small, the designer shall place a note on the plans requiring the culvert contractor to fill and compact the areas. When this work is performed by the culvert contractor it can be designated as being incidental to the bid item "Class 20 Excavation", if there is adequate suitable Class 20 excavation available. If there is inadequate suitable Class 20, the bid item “Class 24 Excavation” is required to provide the fill material. See Figure 7.2.4.4.1 for a culvert section with fill provided by the culvert contractor.

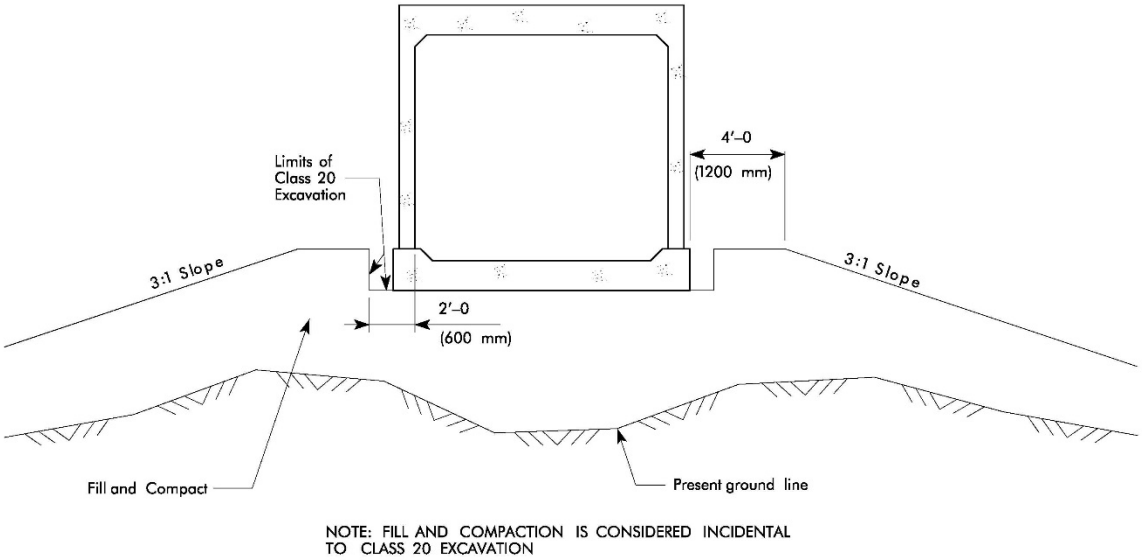

Figure 7.2.4.4.1. Fill and compaction section for fill placed by culvert contractor

The excavation limits discussed above may not be applicable for special situations such as rock excavation or granular blankets.

In some cases, additional excavation, commonly referred to as a core-out, is required below the culvert to remove unsuitable or compressible subsurface materials. The width, length, and depth of the core-out shall be determined by the Soils Design Unit. Unless otherwise specified, the excavation shall be considered Class 20 excavation with quantities being computed as described previously in this section.

7.2.4.4.2 Granular blankets and working blankets

Depending on site soil conditions, the Soils Design Unit will determine when it is necessary to place granular material below a reinforced concrete box culvert. The Soils Design Unit will use the term granular blanket for material which the contractor is required to install, however when the site soil conditions are uncertain, the Soils Design Unit will commonly use the term working blanket for the material. This indicates the material may be eliminated from the project if determined to be unnecessary at the time of construction. If bedrock is directly below a culvert, a granular blanket is always required.

If a granular blanket or working blanket is not specified by the Soils Design Unit, the Bureau's policy is to provide material for a 1'-0" thick working blanket at the bottom of the culvert excavation described in BDM 7.2.4.4.1, on all RCB projects including extensions.

Unless otherwise specified, the bid item "Granular Material for Blanket" shall be used for granular blankets and working blankets. Refer to IDOT SS 4118 for material requirements. For a working blanket, the designer shall provide an appropriate bid item reference note stating that the material is optional for construction and the contractor may request the material be eliminated from the project per contractor means and methods.

When a blanket is necessary, the Soils Design Unit will comment and provide dimensions on the geotechnical design sheets which are part of the soils package for the project. A general section through a granular blanket is shown in the commentary of this section.

The preferred policy is to have the culvert contractor install the granular blanket, in which case the detailer shall provide the details and quantities in the culvert plans. However, if the granular blanket is to be installed by the road contractor, the detailer should only add a granular blanket detail to the culvert plans for reference.

When a core-out has been specified, the Soils Design Unit will provide the backfill material requirements which typically include Macadam Stone Base or a similar gradation.

Refer to Section 7.3.4.3 for additional granular material requirements for precast RCB culverts.

7.2.4.4.3 Keyways

At construction joints, such as those shown in Figures 7.2.4.5.3-1 7.2.4.5.2.2, the detailer shall provide keyways to link the two components together. The sides of the keyway form shall be beveled about 10 degrees so that the form is easier to remove. The bevel dimensions for a typical dimension lumber keyway form are shown in Figure 7.2.4.4.3.

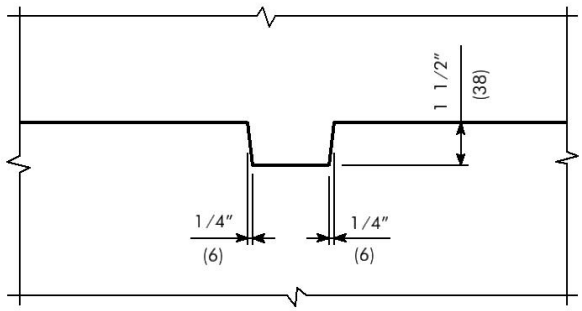

Figure 7.2.4.4.3. Typical keyway detail

7.2.4.4.4 Reinforcement

[AASHTO-LRFD 5.6.3.3, 5.10.1, 5.10.3.1.1, 5.10.3.2, 5.10.6, 9.7.3.2]

For barrels and headwalls the minimum concrete cover over reinforcing steel shall be as shown in Table 7.2.4.4.4-1. The cover amounts in the table meet or exceed the cover required in the AASHTO LRFD Specifications [AASHTO-LRFD 5.10.1].

Table 7.2.4.4.4-1. Minimum clear cover

Location		Clear cover
Rebar edge to concrete surface	Typical minimum	2 inches
	Bottom of floor	3½ inches
	Top of floor	2¼ inches
	Roadway on top slab	2½ inches
Rebar end to concrete surface	Typical horizontal bar	2 inches
	Top of vertical bar	2 inches
	Bottom of vertical bar	3 inches, or 3½ inches if overall height of culvert barrel is not to a full inch

In culvert barrel plans, uniform symbols make reinforcing bar groups easier for the contractor, fabricator, and detailer to identify. Therefore, use the symbols given in Table 7.2.4.4.4-2.

Table 7.2.4.4.4-2. Reinforcing bar group symbols

Location	Symbol
Slab transverse	k
Slab longitudinal	e
Wall vertical	a
Wall horizontal	b
Floor transverse	m
Floor longitudinal	f

Except for large culverts and deep fills, the designer shall limit the maximum bar size to #9. The minimum spacing for non-alternating bars shall be 6 inches. For alternating bars there should be no more than a three-bar-size change between adjacent bars, and for alternating bars with cutoffs not exceeding 50% there should be no more than a one-bar-size change between adjacent bars.

The minimum area of reinforcing in each exposed face of slab, walls, and floor shall meet the AASHTO requirements for shrinkage and temperature [AASHTO-LRFD 5.10.6]. Minimum bar size shall be #4. Spacing shall not exceed three times the slab, wall, or effective floor thickness, 18 inches, or 12 inches for any component more than 18 inches thick.

The minimum area of reinforcement designed for flexure shall meet the AASHTO LRFD Specifications [AASHTO-LRFD 5.6.3.3]. Reinforcement designed for flexure also shall be spaced no farther apart than 1.5 times the slab, wall, or effective floor thickness, 18 inches [AASHTO-LRFD 5.10.3.2], or 12 inches for any component more than 18 inches thick.

In slabs, walls, and floors, parallel reinforcement designed for flexure shall be spaced no closer than 6 inches for non-alternating bars or 4.5 inches for alternating bars. In typical cases these minimums are larger than required by the AASHTO guidelines [AASHTO-LRFD 5.10.3.1.1].

For radial placement the reinforcement spacing may be a minimum of 3 inches. More information for radial placement is given in the article for transverse reinforcement [BDM 7.2.4.5.4.2].

When the height of fill above the top slab is 2 feet or less, the designer shall provide distribution steel in the bottom of the top slab according to the AASHTO guidelines [AASHTO-LRFD 9.7.3.2]. Maximum spacing of the reinforcement shall not exceed 18 inches.

7.2.4.5 Barrels

7.2.4.5.1 Roadway on slab

For reinforced concrete box culverts with no fill, the slab is essentially a bridge deck and requires special detailing as described below.

- The top slab surface shall be finished with macro texture parallel with the centerline of roadway except within 2 feet of the parapet [Iowa DOT SS 2301.03, H, 3]. Use CADD Note E624/M624 [BDM 13.7.2].
- The approach slab shall be tied to the culvert with #5 deformed stainless steel bars at 2 feet on center as shown in Figure 7.2.4.5.1. Cost for the bars is to be incidental to the price for bid item “Reinforcing steel – epoxy coated”. Use CADD Note E634/M634 [BDM 13.7.2].
- The joint between the culvert and approach slab shall be an ‘E’ joint [DB SRP PV-101].
- Depending on construction scheduling it may be necessary for the contractor to protect the edge of the top slab at the approach pavement. In order to require the necessary protection use CADD Note E625/M625 [BDM 13.7.2].
- Provide 2.5 inches cover over the top slab reinforcement by increasing the thickness of the top slab by 0.5 inch.
- All reinforcement in the slab and corbel and all wall reinforcement extending into the slab shall be epoxy coated. Vertical wall reinforcement needs to be spliced to allow for variable thickness of the slab. Provide Class B lap lengths for the epoxy coated vertical bars as given in Table 7.2.4.5.1.

Table 7.2.4.5.1. Minimum lap for vertical epoxy coated bars

Bar size	Class B Lap length, feet-inches
#4	2’-0”
#5	2’-5”
#6	3’-7”
#7	4’-2”
#8	4’-10”
#9	5’-11”

Table note:

Lap length is based on a Class B splice with material strengths of f'_c = 4 ksi and f_y = 60 ksi, an epoxy bar condition, and center-to-center bar spacing of at least 6 inches and

clear cover of at least 2 inches measured in the direction of the spacing. Higher material strengths, smaller spacing, or less clear cover will require longer lap lengths.

- Spacing of the #4 bent corbel reinforcement shall be the same as the spacing of the vertical wall reinforcement so that it can be tied efficiently. Maximum spacing shall be 15 inches.
- Add the approach pavement joint detail in Figure 7.2.4.5.1 to the plans.

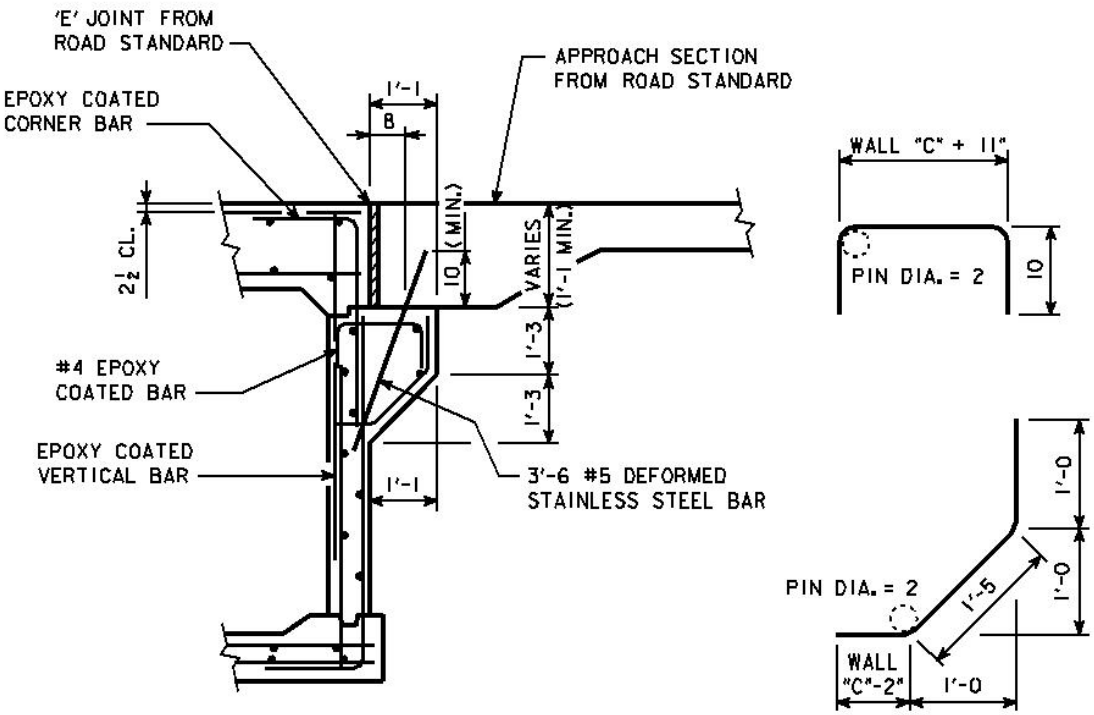

Figure 7.2.4.5.1. Approach pavement joint detail

7.2.4.5.2 Construction joints

7.2.4.5.2.1 Transverse

Whenever possible, construction joints for intermediate culvert barrel sections should be placed at equal intervals and should be a maximum of 38 feet apart. Because the current single, twin, and triple barrel culvert standard plans are detailed on a repeating 3-foot module it is preferable that the intermediate barrel sections be of a compatible length such as 38 feet, 35 feet, 32 feet, etc.

When the fill height above the culvert is 5 feet or less, if at all possible, locate culvert joints outside of the pavement boundaries. Uneven settlement of single barrel joints can cause damage in the pavement above. The location of barrel joints is more critical for multiple barrels because wide culverts tend to settle more unevenly than narrow culverts. Fill heights of 6 feet and more provide better distribution of pavement loads, thereby decreasing uneven settlement and pavement damage.

If a culvert joint must be inside the pavement boundaries, do not place the joint at the centerline of roadway. With the off-center joint, if the pavement were damaged by culvert settlement, one lane could be kept open during repairs.

End barrel sections next to the headwalls should have a minimum length of 10 feet. This minimum length helps with the distribution of settlement and secures the end section in the earth slope. The summation of the lengths of the frost troughs for the headwall and end barrel section should be a maximum of 38 feet. This maximum length is based on the length of the frost trough formwork available to most contractors.

When working with larger skewed culverts, it may not be possible to keep the length of the end barrel sections within the limits specified above. In this case it is desirable to keep the short wall, measured along inside face, a minimum of 5 feet long from back of parapet to construction joint.

7.2.4.5.2.2 Longitudinal

The standard detail at the top of each culvert wall is a permissible construction joint, with the option of lowering the joint with the engineer's approval.

For situations where water flow may make the construction of a large multiple box culvert difficult, provide a permissible longitudinal construction joint so that the floor can be constructed in two stages, as shown in Figure 7.2.4.5.2.2. Guidelines for locating the joint are as follows.

- Place the construction joint outside the short m7 bars.
- Place the construction joint between the longitudinal bars.

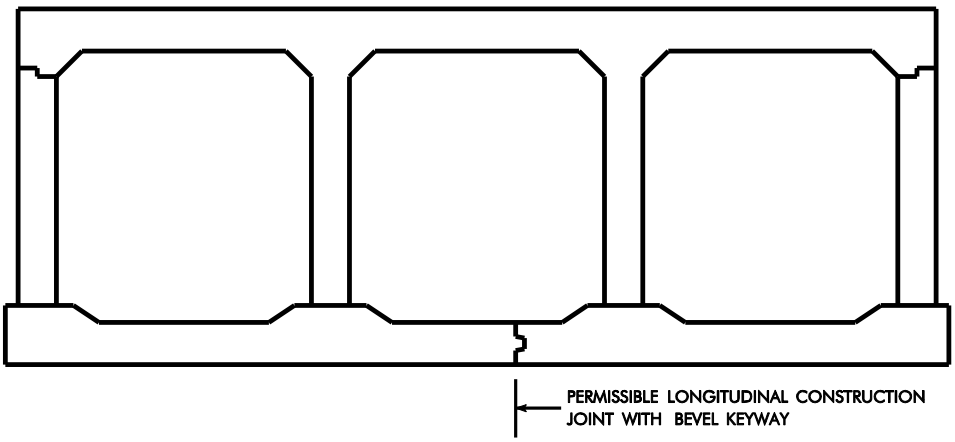

Figure 7.2.4.5.2.2. Permissible Longitudinal Construction Joint

7.2.4.5.3 Bell joints

In cases where large culvert settlements or other significant soil movements may occur, ordinary box culvert joints can open and cause erosion and related distress. A design feature to prevent such problems is a bell joint. The designer shall provide culvert barrel bell joints wherever any of the following conditions occur.

- The Soils Design Unit anticipates settlement of 12 inches or greater for single box culverts and 6 inches or greater for twin and triple box culverts. If such large settlements occur in the area where the culvert is constructed, the culvert construction joints tend to open up in the floor and walls. This allows the fill to erode through the open joints and cause increased settlement.
- Design fill heights are 35 feet or more. If embankments with such large fill heights are built on incompressible soil or bedrock, settlement may not be a problem, but some subsidence may occur within the fill itself. This subsidence will cause longitudinal forces to develop and pull the barrel construction joints apart.
- When estimated settlements are not available from the Soils Design Unit, the designer should use bell joints for single barrel culverts with 25 feet or more of fill and for multiple barrel culverts with 15 feet or more of fill.
- In cases where extensions are being added to an existing box culvert with bell joints, the designer should strongly consider providing bell joints on the extensions as well. Additional information and details for the extension are given in the bell joints article for extensions [BDM 7.2.4.9.3].

If the need for bell joints is uncertain, it is best to use them to ensure against possible culvert joint deterioration.

If bell joints are locked into bedrock they will not rotate and function as designed. Therefore, if bedrock is present in the streambed, the designer should adjust the flowline elevation so that the entire bell joint is above the surface of the rock, or the designer should require the rock to be excavated and backfilled with suitable material. Generally bell joints would not be used in this situation. The designer shall verify any decision with the Soils Design Unit.

With culvert settlement, a bell joint will open, thus reducing bearing length within the joint. As a rule of thumb, the designer should provide a minimum bearing length of 9 inches. This minimum will allow a maximum opening of 1 inch for a standard 10-inch bell joint [BSB SS CBJ 1-20] 3 inches for a standard 12-inch bell joint [BSB SS CBJ 2-20, TWCBJ 1-20] and 6 inches for a standard 15-inch bell joint [BSB SS CBJ 3-20, CBJ 4-20, TWCBJ 2-20, TRCBJ 1-20, TRCBJ 2-20], as shown in Figure 7.2.4.5.3-1.

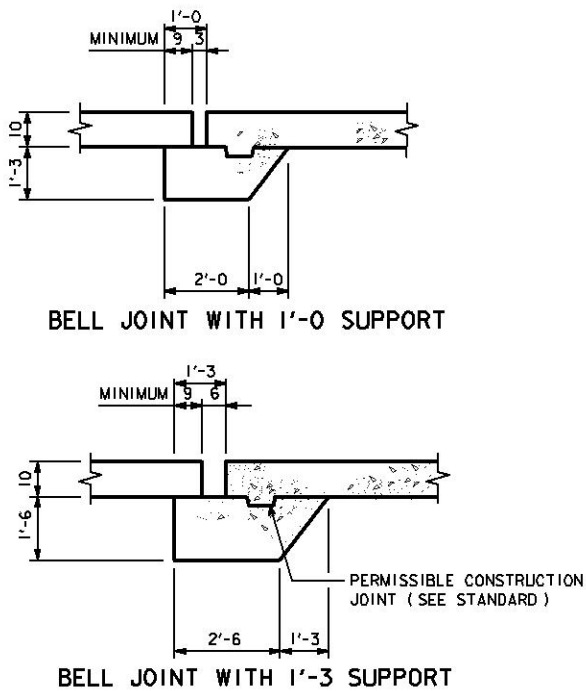

Figure 7.2.4.5.3-1. Allowable bell joint openings with standard details

The designer shall consult with the Bridge Project Development Engineer if bearing at a bell joint will be less than 9 inches. It may be necessary also to consult with the Soils Design Unit regarding alternatives such as over-excavation, geopiers, or non-standard bell joints.

Longitudinal reinforcing is not permitted through bell joints. The "m1" and “m9” floor bars, in the area of the bell joints, must be shortened on the design plan or by field cutting to prevent them from locking up the bell joint.

The designer should include a detail similar to Figure 7.2.4.5.3-2 in the plans showing the correct orientation of the bell joint with flow and the permissible construction joint to simplify construction [BSB SS CBJ 4-20]. For reference and use on typical reinforced concrete box culvert projects, bell joint details are provided in standard plans [BSB SS CBJ 1-20 to CBJ 4-20].

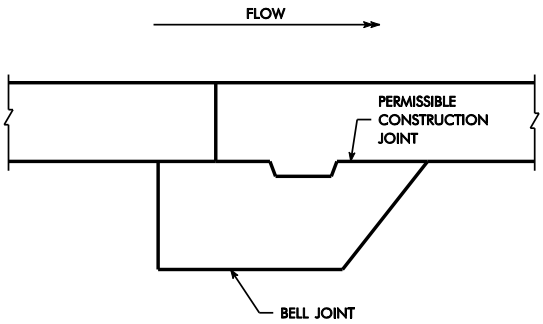

Figure 7.2.4.5.3-2. Typical barrel bell joint with flow orientation

If the top slab, wall, or floor thickness for a specific project changes from the bell joint standard sheets [BSB SS CBJ 1-20 to CBJ 4-20], the designer shall modify the standard. The changes shall reflect the new slab, wall, and floor thicknesses and new concrete quantities. The modified bill of reinforcing steel should reflect the corrected bar lengths and weight, and the bent bar details should be corrected. All information for other culvert sizes should be deleted from the sheet. The designer should replace the standard sheet title block with the one used for the design and should include this modified bell joint sheet as a design sheet in the plans.

When the culvert is designed for varying fill heights, the bell joint details must address the change in floor and slab thickness, but the designer shall not reduce the thickness of the designed culvert section. Figure 7.2.4.5.3-3 shows details for changes in thickness in barrel walls.

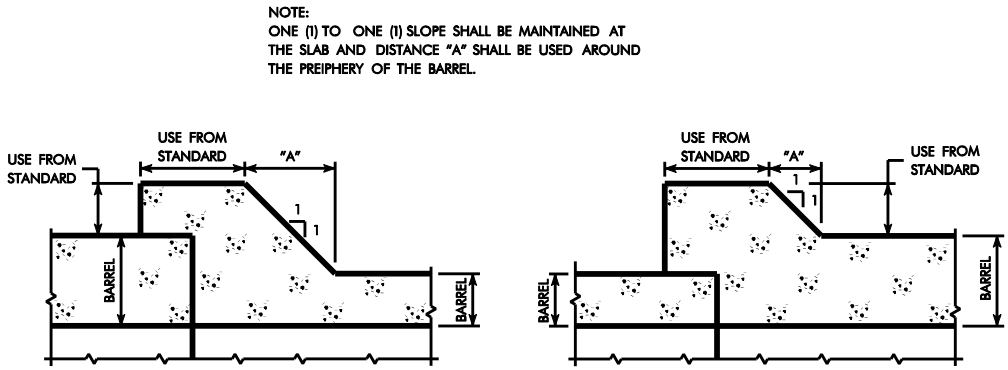

Figure 7.2.4.5.3-3. Barrel bell joint details for change in floor, wall, and slab thickness from thick to thin and from thin to thick

When both the width and height of reinforcing bars in the transverse direction exceed 6 feet the bent bars will be difficult to ship. Therefore, in those cases, the designer shall provide U-bars and straight bars with laps as shown in Figure 7.2.4.8.1-3 and as sized in Table 7.2.4.8.1 [BSB SS CBJ 1-20 to BSB SS CBJ 5-20].

7.2.4.5.4 Horizontally curved alignments

7.2.4.5.4.1 Layout

For ease of cast-in-place construction on curved alignments, culvert contractors prefer straight segments. The AASHTO publication, *Highway Drainage Guidelines* [BDM 7.1.5.2], notes that bends up to 15 degrees do not affect flow significantly and thus are acceptable when needed. For these reasons the

Bureau designs horizontally curved culverts as straight segments with a maximum centerline barrel section length of 38 feet and with maximum bends of 15 degrees, unless permission is granted for sharper bends.

The following are additional guidelines:

- All bent sections shall have equal lengths between bends. Also, to make detailing and construction easier, the Bureau prefers that the distance between the bend locations and the joint locations be symmetrical for each barrel section as shown in Figure 7.2.4.5.4.1.
- A bend shall be 5, 10, or 15 degrees. Bends greater than 15 degrees are allowed only when approved by the Preliminary Bridge Engineer.
- For barrel spans of 6 feet or less, the shortest barrel wall shall have a minimum length of 3 feet from the bend, as shown in Figure 7.2.4.5.4.3-1. The minimum length should be increased slightly so that the barrel length at the centerline of the culvert is dimensioned to the nearest whole inch in foot-inch format.
- For barrel spans of 8 feet or more, the shortest barrel wall shall have a minimum length of 5 feet from the bend, as shown in Figures 7.2.4.5.4.3-2, 7.2.4.5.4.4-1, and 7.2.4.5.4.4-2. The minimum length should be increased so that the barrel length at the centerline of the culvert is dimensioned to the nearest whole foot in foot-inch format.

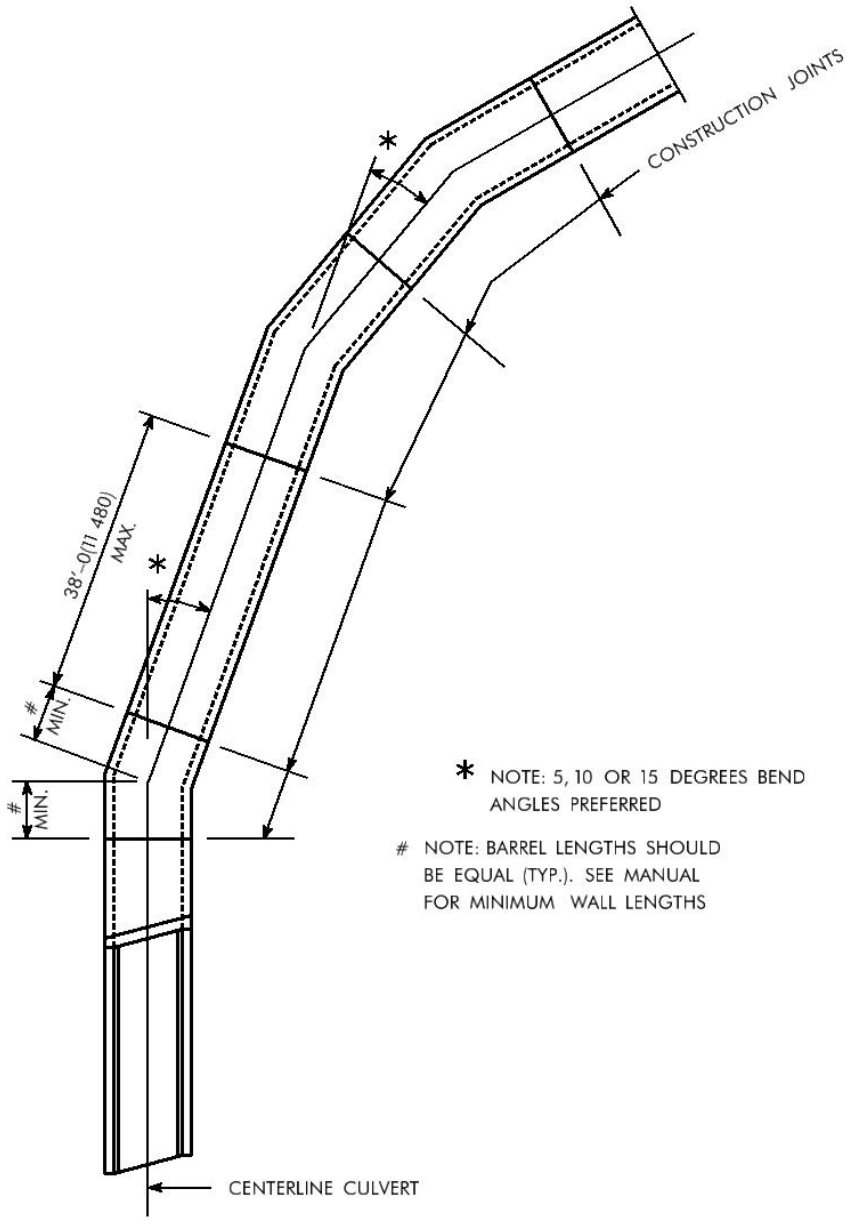

Figure note:

- Bends greater than 15 degrees require the approval of the Preliminary Bridge Engineer.

Figure 7.2.4.5.4.1. Example layout for a straight segment culvert on a horizontally curved alignment

7.2.4.5.4.2 Transverse reinforcement

The Bureau has the following guidelines for detailing transverse reinforcement at culvert bends.

- Maintain normal transverse reinforcing steel patterns to the front face of the shortest barrel wall for each barrel. Add flared bars to maintain design spacing at the wall joints and mid-span of the barrel.

- Whenever possible, keep the bar spacing and length pattern through the bend. Bar spacing should be a minimum of 3 inches center-to-center and a maximum of one-and-one-half times the design bar spacing.
- When the pattern cannot be maintained through the bend, drop the pattern and make the bar lengths as long as possible following the guidelines for minimum and maximum spacing given above.
- For ease of construction, keep the number of bars to a minimum and the reinforcing layout as simple as possible. Draw different bar arrangements to determine the best layout.
- Check to ensure that at maximum bending moment locations, such as midspan for positive bending and above interior wall for negative bending, the spacing of the reinforcing steel does not exceed the spacing required for strength.

The transverse reinforcing layouts for twin barrel culverts in Figures 7.2.4.5.4.2-1 through 7.2.4.5.4.2-4 were developed to minimize the number of variable bars and should be used in detailing the slabs and floors of single and multiple bent barrel sections.

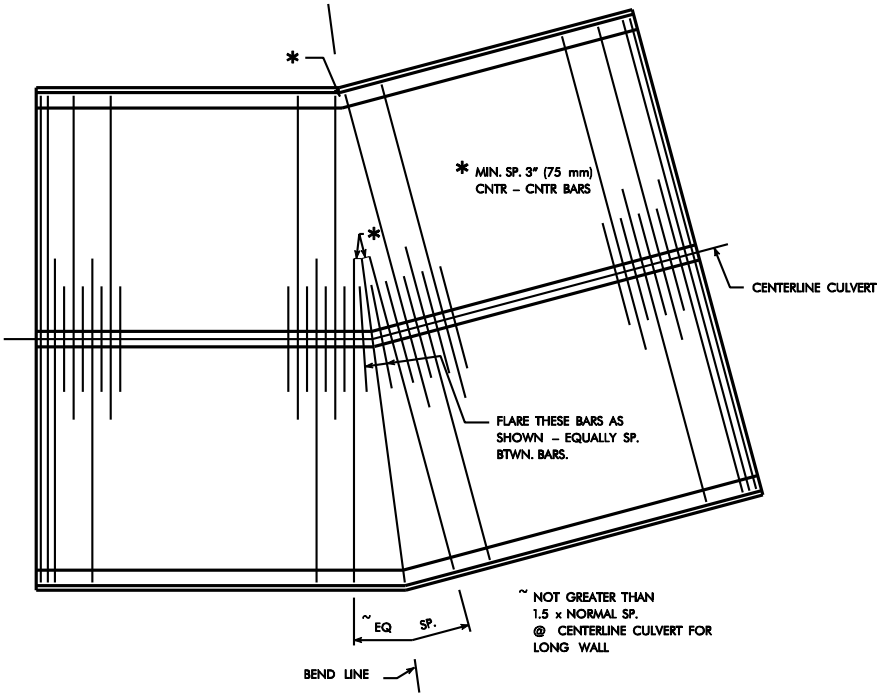

Figure 7.2.4.5.4.2-1. Transverse reinforcing layout for top of slab

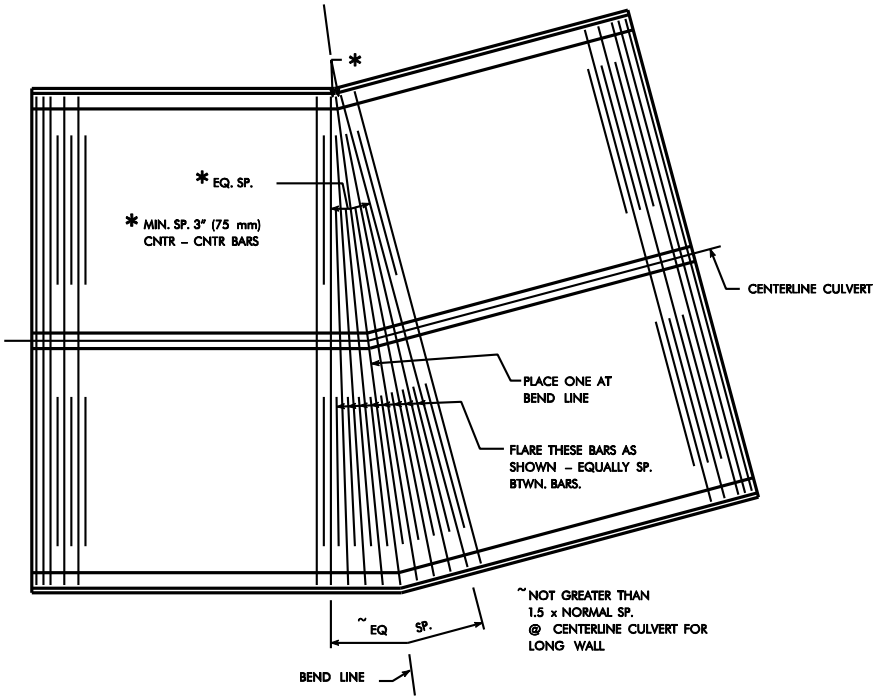

Figure 7.2.4.5.4.2-2. Transverse reinforcing layout for bottom of slab

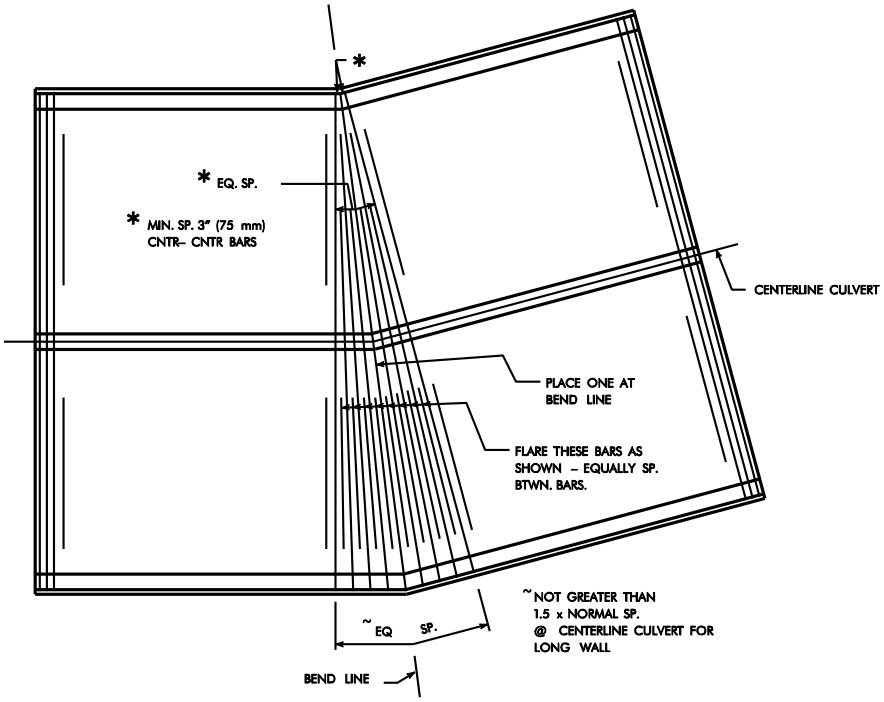

Figure 7.2.4.5.4.2-3. Transverse reinforcing layout for top of floor

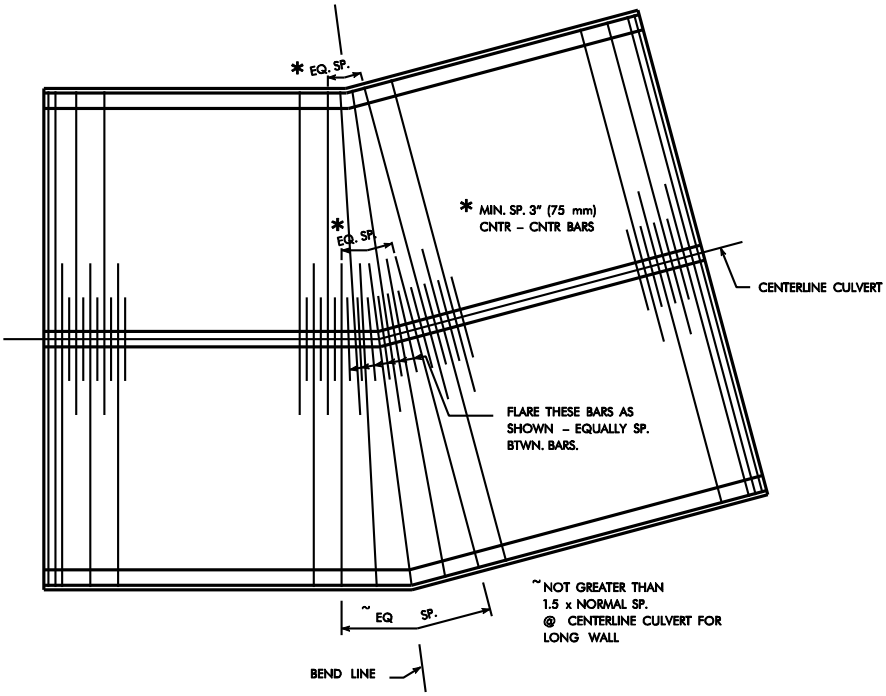

Figure 7.2.4.5.4.2-4. Transverse reinforcing layout for bottom of floor

7.2.4.5.4.3 Longitudinal reinforcement for single barrels

When detailing longitudinal bars for single barrel bends, follow the bar bend layouts shown in Figures 7.2.4.5.4.3-1 and 7.2.4.5.4.3-2. See also the guidelines for multiple barrels [BDM 7.2.4.5.4.4].

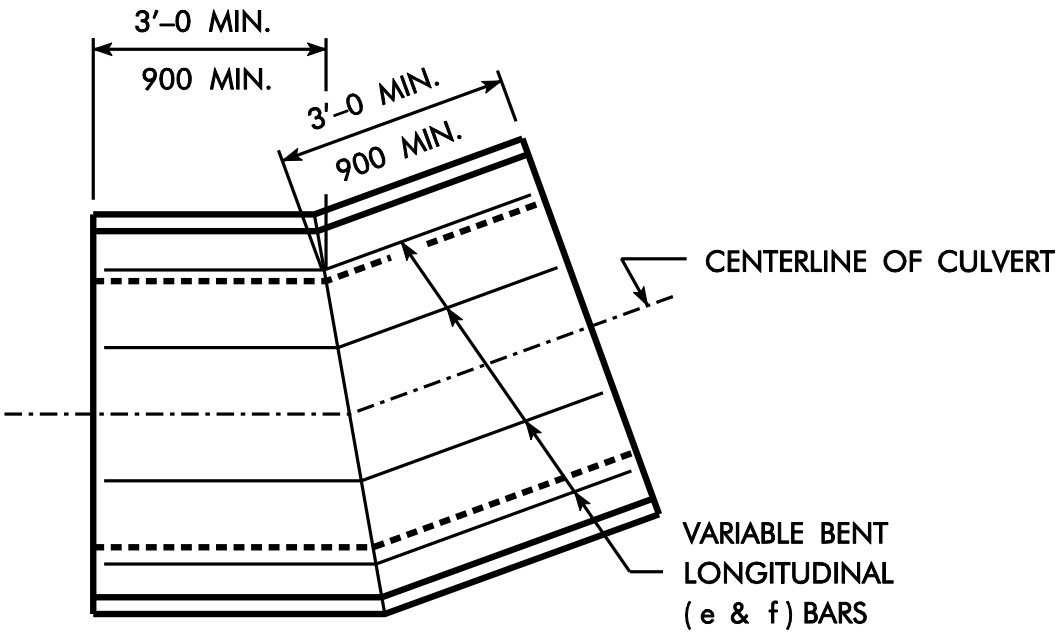

Figure 7.2.4.5.4.3-1. Longitudinal bar bends for 4-foot to 6-foot spans

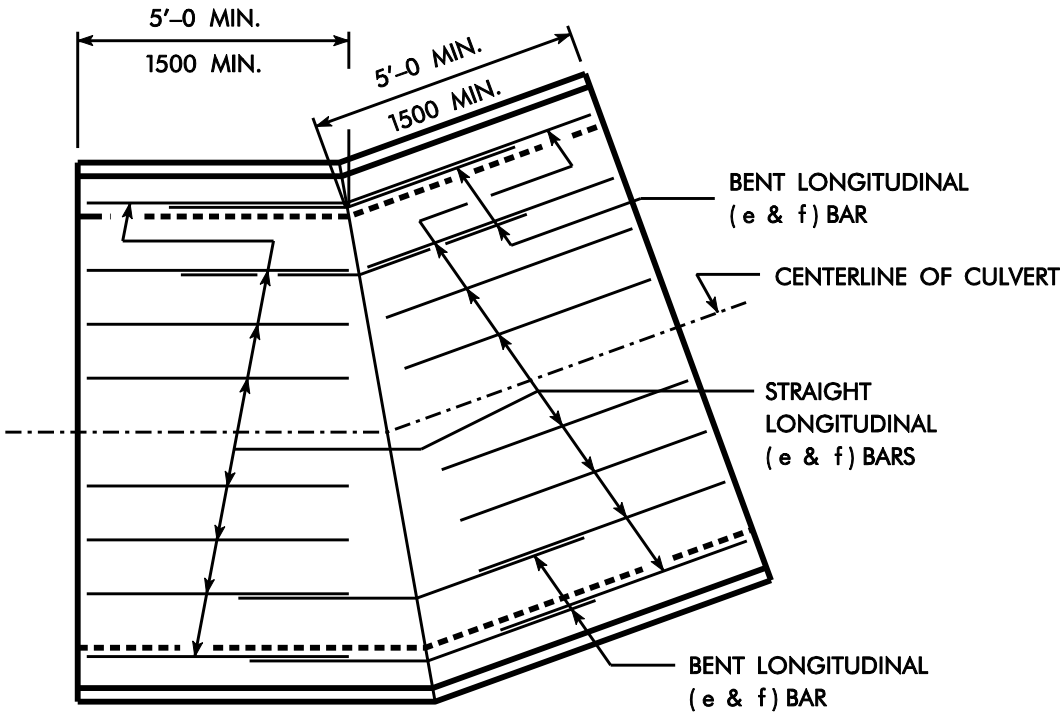

Figure 7.2.4.5.4.3-2. Longitudinal bar bends for 8-foot to 12-foot spans

7.2.4.5.4.4 Longitudinal reinforcement for multiple barrels

Longitudinal wall reinforcement for multiple barrel culverts is detailed differently from longitudinal slab and floor reinforcement. The barrel wall horizontal (b) bars are to be made up of single bent bars and are not to be spliced with bent bars. For the bars placed in each face, the bar lengths are determined using the centerline wall length. The horizontal bars in each wall will have a different length and bar designation.

For culvert barrel spans of 6 feet or less the longitudinal (e & f) bars in the slab and floor should be bent and of variable length.

For culvert barrel spans of 8 feet or more the longitudinal (e & f) bars in the slab and floor should be straight bars of constant length for each barrel and bent bars with variable lap lengths as shown in Figures 7.2.4.5.4.4-1 and 7.2.4.5.4.4-2. The following are additional guidelines:

- The length for the straight longitudinal (e & f) bars in the slab and floor should allow 2 inches clear at the barrel joint end and extend to where the front face of the short barrel wall bends.
- The bent longitudinal (e & f) bars in the slab and floor are to lap the straight longitudinal bars with the lap shown for the bar size in Table 7.2.4.5.4.4. If the concrete thickness below the bar exceeds 12 inches, use the Top Bar lap from the table. There will be one bent bar length for each of the bar sets: top slab, bottom slab, top floor, and bottom floor reinforcement. (This also will be the case for single barrel culverts.)
- The straight longitudinal bars will change length in each barrel as shown in Figures 7.2.4.5.4.4-1 and 7.2.4.5.4.4-2. The bent longitudinal bars will remain one length for all barrels.

Table 7.2.4.5.4.4. Minimum longitudinal (e & f) bar laps

Bar size	Top Bar Lap (1) Feet-inches	Other Bar Lap (1) Feet-inches
#4	1’-7”	1’-3”
#5	2’-0”	1’-6”
#6	2’-5”	1’-10”

Table notes:

(1) Lap length is based on a Class A splice with material strengths of f'_c = 4 ksi and f_y = 60 ksi, a black bar condition, center-to-center bar spacing of at least 6 inches, and clear cover of at least 2 inches measured in the direction of the spacing. Higher material strengths, epoxy coating, smaller spacing, or less clear cover will require longer lap lengths.

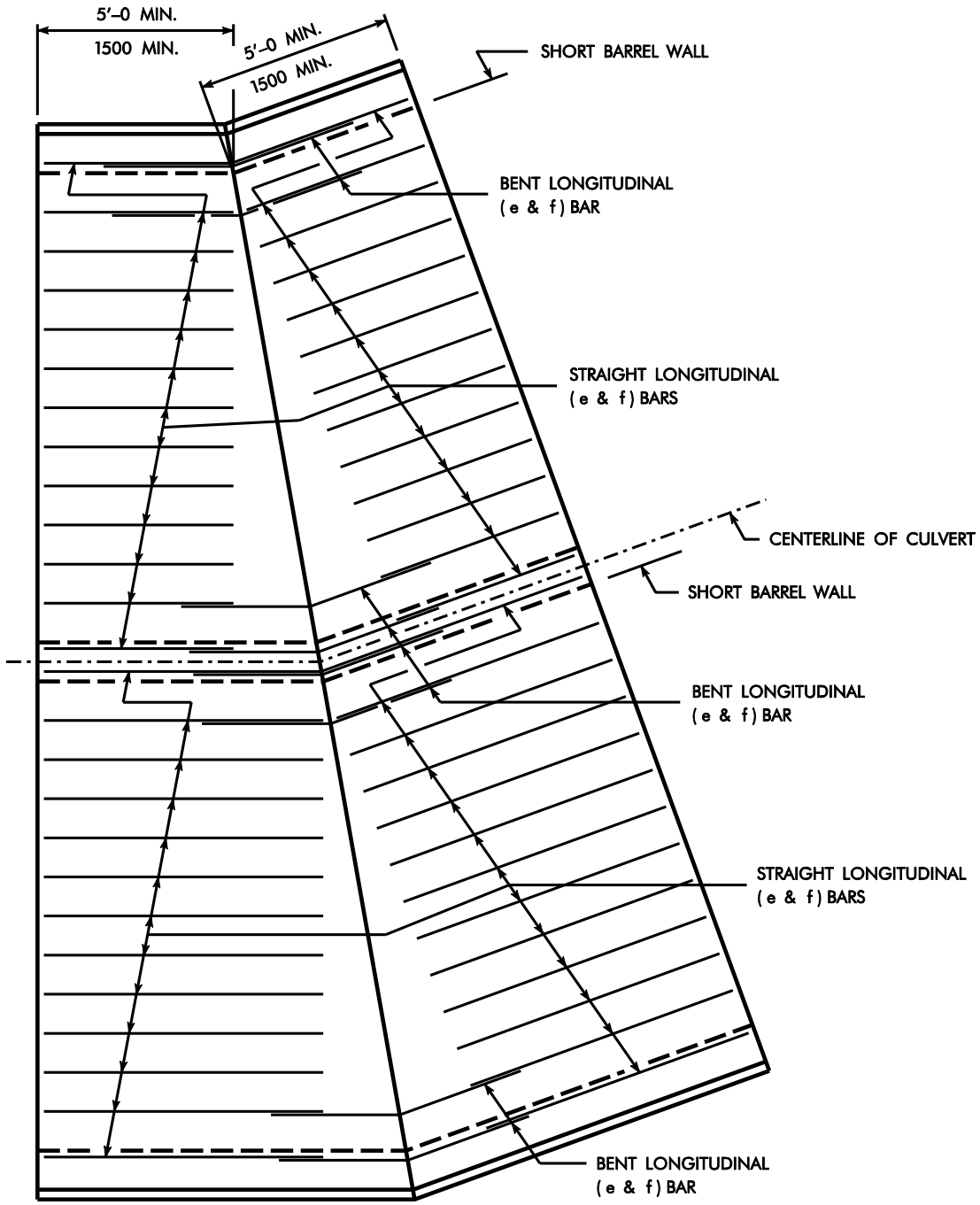

Figure 7.2.4.5.4.4-1. Longitudinal bar bends for 12-foot span twin culvert

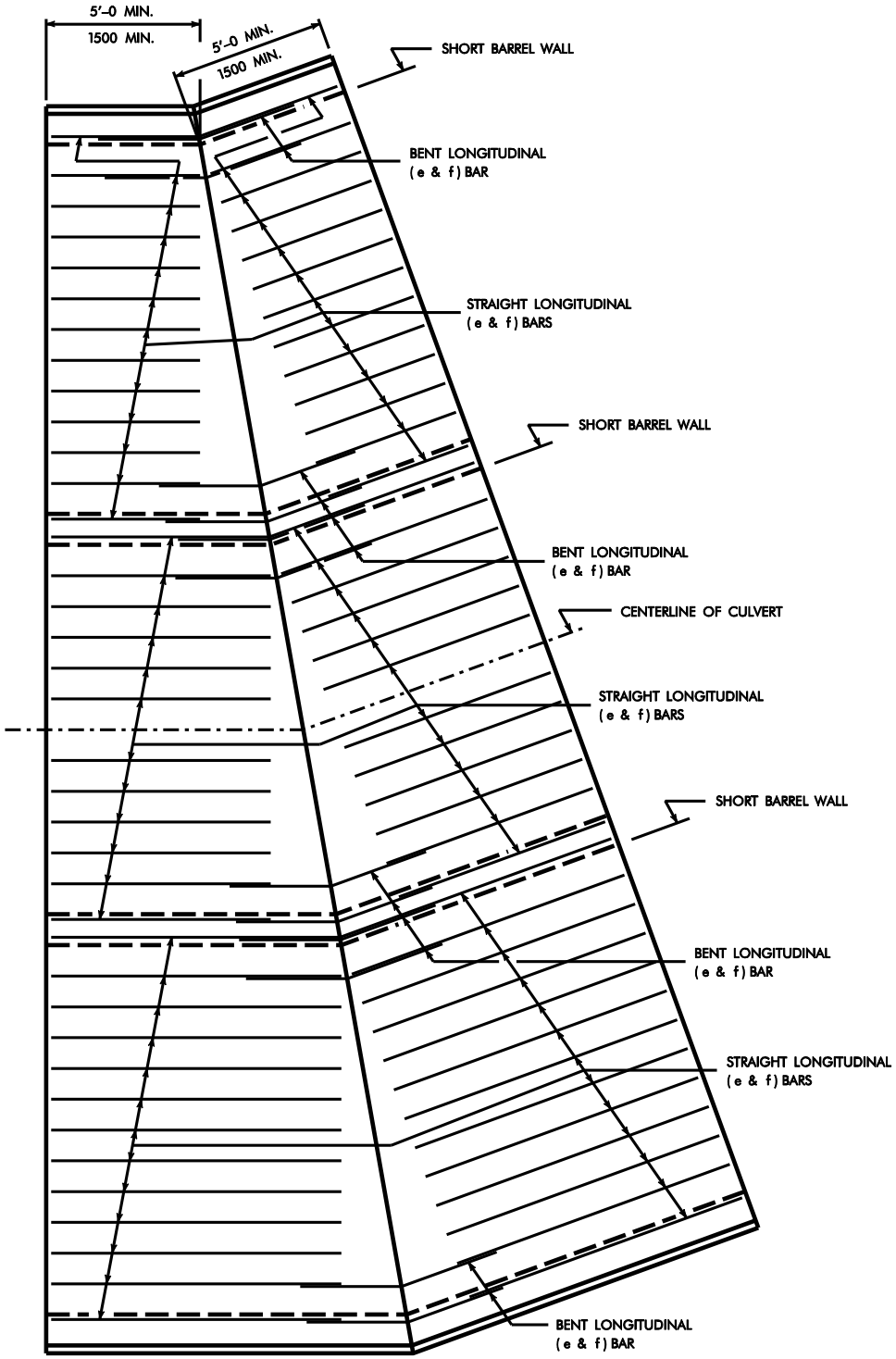

Figure 7.2.4.5.4.4-2. Longitudinal bar bends for 12-foot span triple culvert

7.2.4.5.5 Wall penetrations

7.2.4.5.5.1 Pipes

As needed, the preliminary designer will designate locations where openings for reinforced concrete pipes (RCPs) are to be provided in the reinforced concrete box culvert walls or top slab. Bureau policy is for the pipe sections to be cast in the wall or slab during the box culvert construction.

For pipes in walls, give the flow line elevation of the proposed pipe, and reference its location with respect to the back face of the parapet. For pipes in the slab, reference the location with respect to the back face of the parapet and the centerline of the culvert. The end of the pipe shall extend a minimum of 6 inches past the inside face of the culvert wall. The maximum length of pipe to be cast into the wall should be 4 feet. See Figure 7.2.4.5.5.1 for a sample detail.

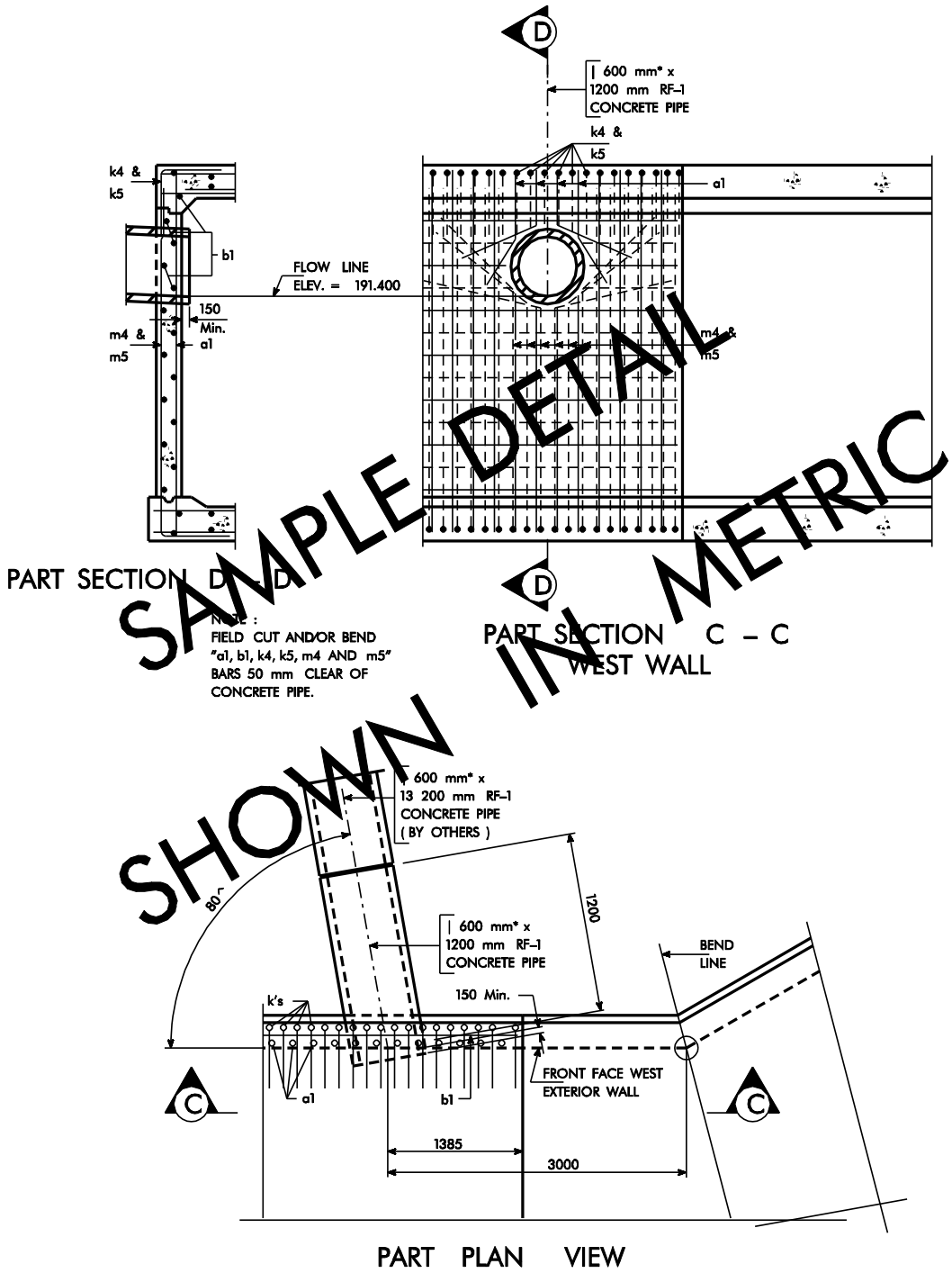

Figure notes:

- For pipes 48 inches and larger, use reinforcing shown in Figure 7.4.4.8.1.
- Place a note on the plans similar to CADD note E633 or M633 [BDM 13.7.2].

Figure 7.2.4.5.5.1. Sample detail for a concrete pipe through a culvert wall

The portion of the pipe that is cast into the culvert wall or slab shall be incidental to the cost of structural concrete. The item reference list should include the size and length of the pipe.

7.2.4.5.5.2 Weep holes

In cases such as a nearby natural spring, high water table, or use of a drainage blanket where it is advisable to reduce hydraulic pressure on a reinforced concrete box culvert, the Soils Design Unit or preliminary designer will recommend that weep holes be placed in exterior walls. The 4-inch diameter weep holes normally are placed in pairs, with the bottom hole one foot above the flow line. The top hole is placed one foot above the bottom hole and offset one foot, as shown in Figure 7.2.4.5.5.2-1. Typically, there will be one set of weep holes per 38-foot barrel section.

Each hole is covered with a rodent screen consisting of a 24-inch square by ¼-inch galvanized hardware cloth centered on the weep hole. Normally the culvert contractor is required to place porous backfill over the weep holes, as shown in Figure 7.2.4.5.5.2-2, and also to furnish and place special backfill material when completing the Class 20 excavation.

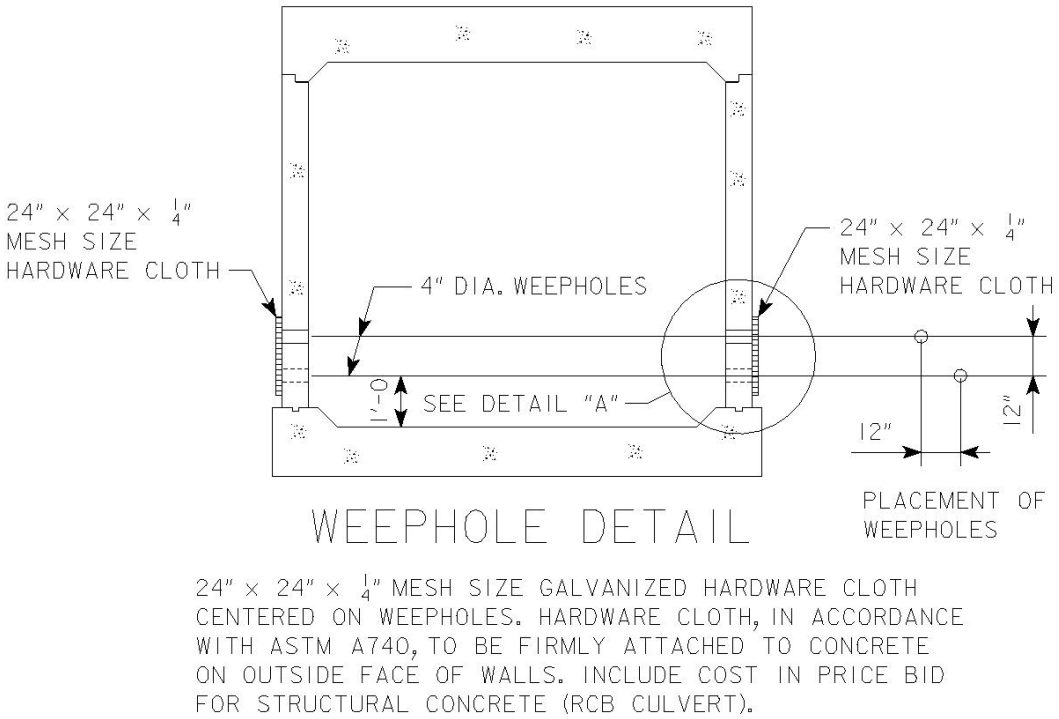

Figure 7.2.4.5.5.2-1. Exterior wall weep hole detail

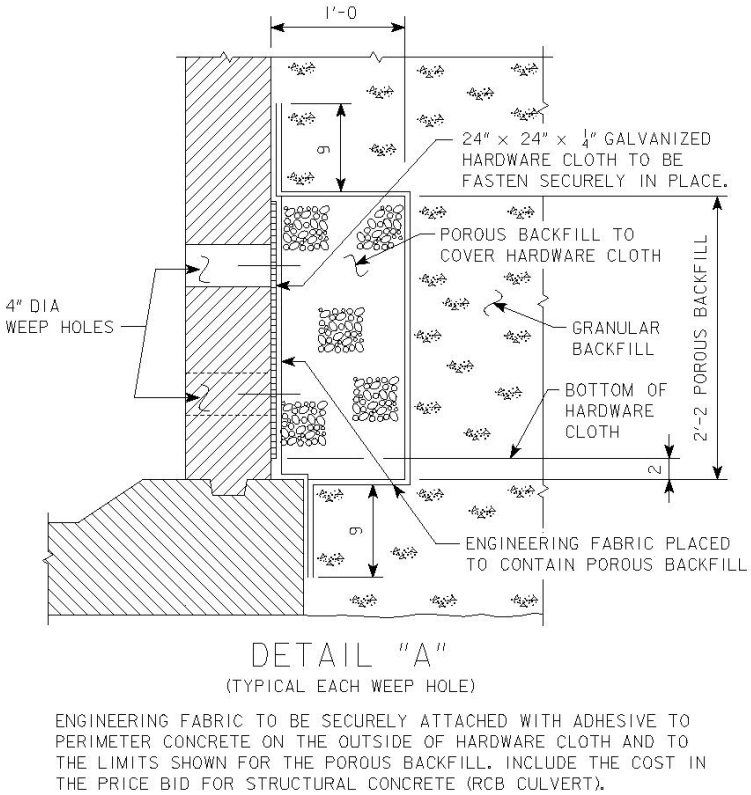

Figure 7.2.4.5.5.2-2. Typical individual weep hole detail

7.2.4.5.6 Settlement and camber

Reinforced concrete box culverts often are placed in embankments that will settle as new loads compress existing soil and/or embankment fill. The Soils Design Unit will provide the culvert settlement estimates needed for final design.

If the anticipated settlement is zero, the designer should provide the note “Anticipated Settlement = Negligible” under the longitudinal section along the centerline of the culvert.

If the estimated settlement for a culvert is 6 inches or more, the designer shall camber the culvert. Settlement is considered to be zero at the toes of the fill slopes and maximum at the roadway shoulder lines. Therefore, the camber should be set as zero at the inlet and outlet flow lines and as the maximum settlement at the shoulder lines, with linear interpolation between any set of two points. The designer should give the flow line elevation at each cambered bell joint and provide a note under the longitudinal section along the centerline of the culvert, “Anticipated Settlement = ___ feet”, for the maximum settlement. See BDM 7.2.4.5.3 regarding the need for bell joints.

7.2.4.6 Headwalls

Transitions between different wing and adjacent barrel wall thicknesses are handled differently for single, twin, and triple RCB culverts. The Single-, Twin-, and Triple Reinforced Concrete Box Culvert Standards include transition wall details on sheets RCB G3-20, TWRCB G3-20, and TRRCB G3-20, respectively.

7.2.4.7 Inlets

7.2.4.7.1 Trash racks

As necessary for unusual site conditions, the preliminary designer will add a steel pile trash rack to the situation plan for a reinforced concrete box culvert. The trash rack is placed across the streambed upstream from the culvert and is intended to prevent large trees or other large debris from plugging the culvert inlet.

The length of the trash rack is governed by the size of the culvert and the width of the stream. A typical trash rack is made from HP 10 x 42 piles spaced about 10 feet apart in a line across the stream. The piles normally are driven to a specified elevation, the tops are prepared by drilling or burning and reaming holes for bolts, and a pile section is then bolted horizontally to the upstream side of each driven pile with four galvanized 7/8 inch diameter high strength bolts, nuts, and washers.

Designers and detailers should check all available soil borings for the elevation of bedrock below the stream bed elevation. The piles must be driven deep enough in soil to develop lateral strength to resist the debris load.

For an example of a typical trash rack see the plans for Montgomery 285 on Iowa Highway 48.

7.2.4.7.2 Debris racks

When necessary, Preliminary Bridge Design Unit will add a debris rack to the inlet end of a culvert. A debris rack is relatively lightweight and intended to prevent plugging of a culvert by ordinary trash and debris. The designer shall contact the Preliminary Bridge Design Unit to discuss design criteria.

The Construction and Materials Bureau recommends that debris racks be made with smooth ½-inch or 5/8-inch diameter steel bars meeting the requirements of commercial grade, low carbon steel, AASHTO M1020. The designer shall note on the plans that the racks are to be fabricated before galvanizing.

When detailing debris racks the designer should be aware of the size limitations of available galvanizing kettles. The table below gives usable medium and large kettle sizes for galvanizers in Iowa and adjacent states.

Table 7.2.4.7.2. Usable sizes of galvanizing kettles in Iowa and adjacent states[1]

General Kettle Size Category	Number of Kettles Available in 2009	Length, feet	Width, feet	Depth, feet
Medium	2	29.00	5.50	4.00
Large	6	50.00	6.17	7.00

Table note:

(1) The usable sizes were determined from *GalvaSource*, a publication available from the American Galvanizers Association web site: http://www.galvanizeit.org/images/uploads/publicationPDFs/North_American_Galvanizers_Listing.pdf. The usable sizes are the least published sizes for the arbitrary categories in the table less clearances of 1.00 foot on length and depth and 0.50 foot on width.

For an example of a debris rack see the plans for Clayton 483 on US 18.

7.2.4.7.3 Safety grates

When a box culvert inlet or outlet will be in the clear zone and otherwise unprotected, Preliminary Bridge Design Unit in consultation with the Design Bureau will add a safety grate. A safety grate is heavier than a debris rack [BDM 7.2.4.7.2] and is intended to prevent serious injury to occupants of an errant vehicle traversing the end of a box culvert.

Safety grate design guidelines originally were developed by the Texas Transportation Institute [BDM 7.1.5.2] and then were included with minor modifications in AASHTO's Roadside Design Guide [BDM

7.1.5.2]. Recent testing of a grate that met the guidelines and NCHRP Report 350, TL-3 standards verified the grate's safety performance on roadside slopes as steep as 3:1 horizontal to vertical [BDM 7.1.5.2]. The Design Bureau has developed standard safety grate designs for box culverts [DB SRP DR-503] that meet the Roadside Design Guide guidelines, and the designer should use the standard designs.

In unusual cases when a standard design is not appropriate, the designer shall provide a grate that meets the Roadside Design Guide standards and generally follows the Design Bureau's standard details and notes. The grate members should be designed for yield under a traversing 1.8-kip load. The pipe members should be fabricated from ASTM A53, Grade B steel pipe [IDOT SS 4153.05]. It is important that the designer note on the plans that the members and brackets are to be fabricated before galvanizing.

7.2.4.7.4 End walls

When necessary to elevate the inlet for a multiple barrel reinforced concrete box culvert, the preliminary designer will add an end wall to the basic culvert headwall configuration. The end wall weir will set the elevation of the upstream flow, and therefore the end wall height shall be determined by the Preliminary Bridge Design Unit.

Figures 7.2.4.7.4-1 and 7.2.4.7.4-2 show typical details for an end wall applied to a standard twin or triple box culvert. For end walls the designer should follow these guidelines:

- The additional quantities for the modification of the interior wall of the headwall are to be included with the end wall quantities.
- The interior wall reinforcing steel from the standard culvert plan is not to be modified. The displaced concrete area from the interior wall is to be subtracted from the end wall concrete quantity.
- The additional vertical hoops shall match bar size with the vertical "c" headwall bars. The additional horizontal bars shall match bar size with "s" bars from the standard flared wing

headwall plan.

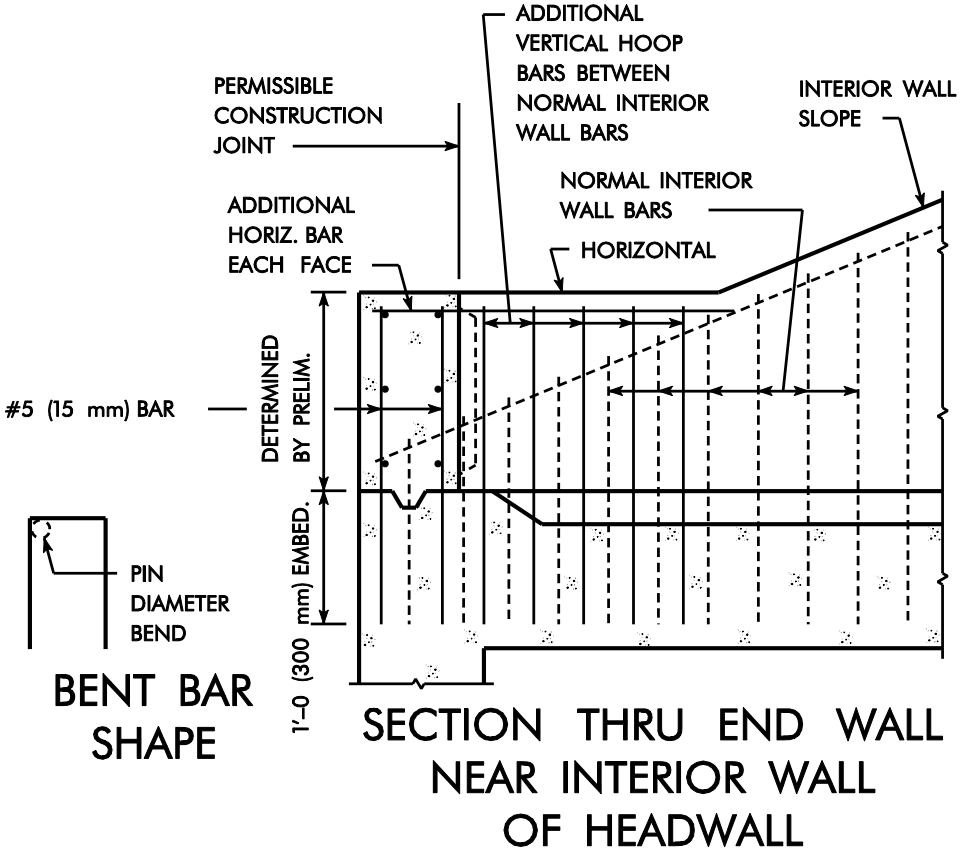

Figure 7.2.4.7.4-1. End wall details for a multiple box culvert

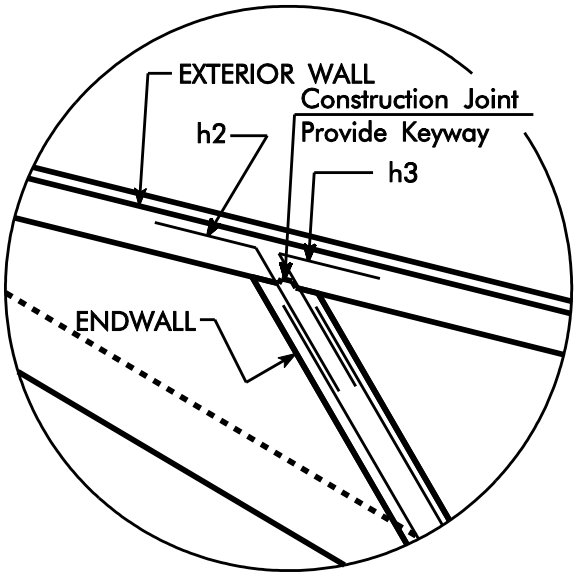

Figure note:

- Exterior wall bar leg is to be tied to exterior headwall steel.

Figure 7.2.4.7.4-2. Detail of end wall to exterior wall connection

7.2.4.7.5 Slope tapered inlets

A slope tapered inlet is intended to reduce construction costs by reducing the size of a culvert barrel and still provide acceptable hydraulic capacity and upstream headwater. The culvert site must have enough elevation difference for the overall culvert design to function properly. Usually the culvert outlet will have a flume and basin to dissipate energy.

Bell joints are placed between the slope tapered inlet and the culvert. For a reinforced concrete box culvert, the designer shall provide 1.50 feet of normal barrel length at the inlet-culvert joint to accommodate placement of the bell joint. See Figure 7.2.4.7.5 for sample slope tapered inlet details.

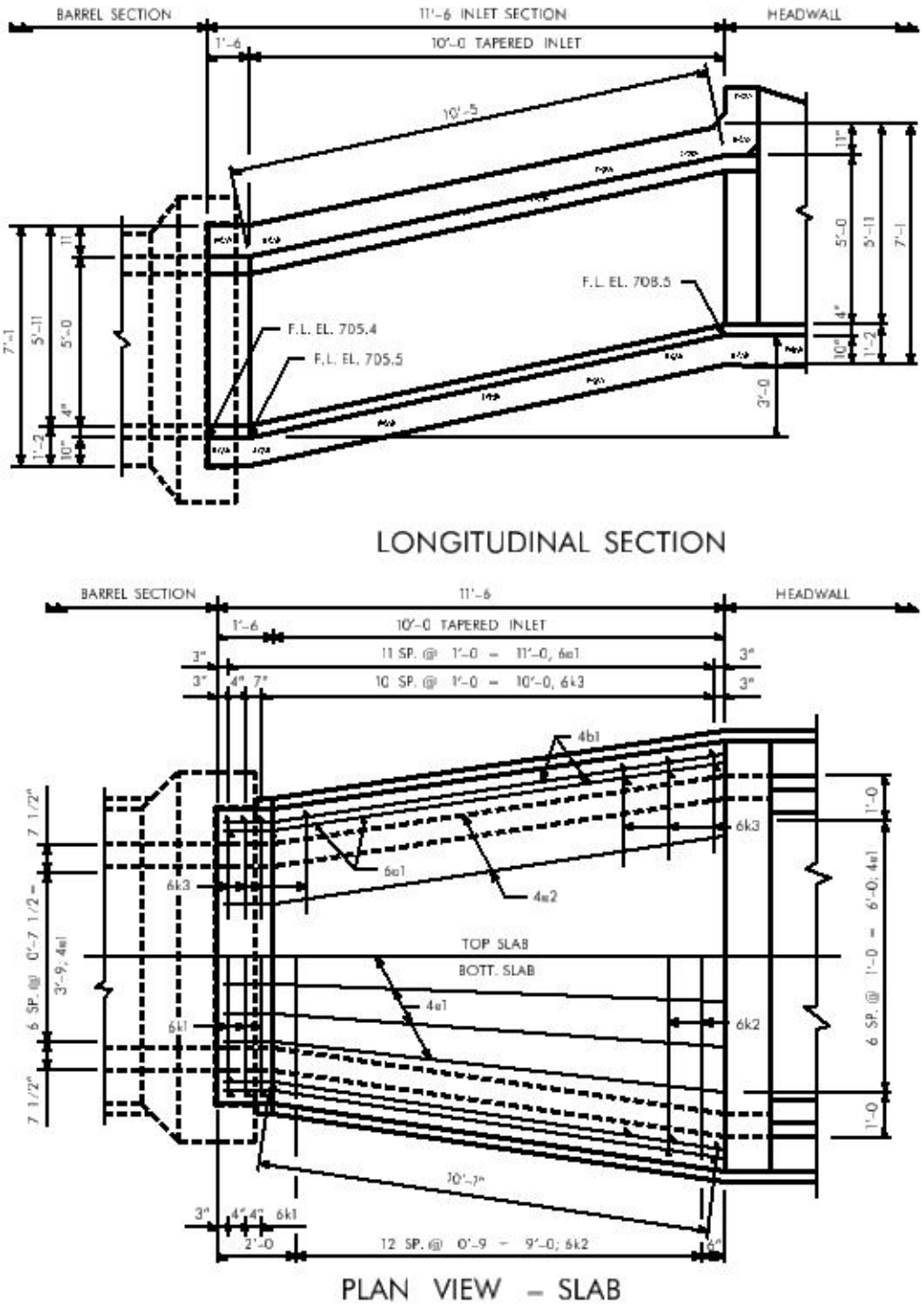

Figure 7.2.4.7.5. Sample reinforced concrete box culvert slope tapered inlet details

7.2.4.7.6 Drop inlets

Reserved.

7.2.4.8 Outlets

7.2.4.8.1 Flumes

For a site with considerable elevation difference the preliminary designer may add a flume to conduct water from the reinforced concrete box culvert outlet down to streambed elevation. Flume length and outlet elevation are dependent on the configuration of the site. The flume length will be determined by the preliminary designer and generally rounded to the nearest one foot. Other, calculated flume dimensions determined by the final designer or detailer, however, should be given to the nearest 1/8-inch.

The typical flume floor begins at its top with an L3 length that fits a parabolic curve and continues with a straight length to its bottom. Curve equations are given in Figure 7.2.4.8.1-1, and area equations are given in Figure 7.2.4.8.1-2. Standard flume dimensions for 3:1 and 4:1 horizontal to vertical slopes are given on a standard sheet with slightly different notation [BSB SS RCF-03-20].

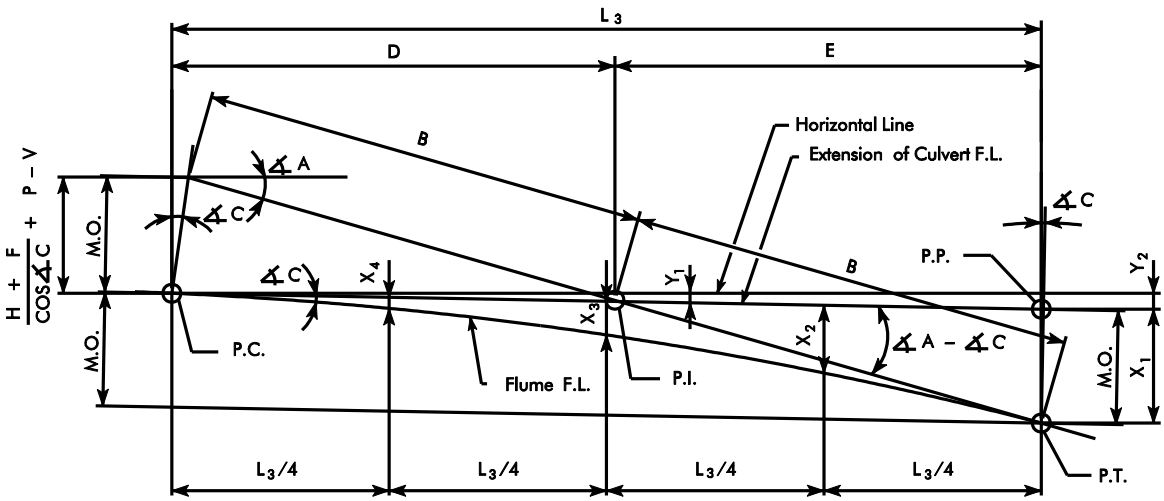

PARABOLIC CURVE

$$M.O. = \left[\frac{H + F}{\cos \measuredangle C} + P - V\right] \frac{\sin \measuredangle (90 \text{ deg} - A)}{\sin \measuredangle (90 \text{ deg} - C + A)}$$

$$B = \frac{M.O.}{\sin \measuredangle (A - C)}$$

$$E = B \cos \measuredangle A$$

$$D = \frac{M.O.}{\tan \measuredangle (A - C)} \cos \measuredangle C$$

$$L_3 = E + D$$

$$X_1 = M.O. \cos \measuredangle C$$

$$X_2 = 9/16\ X_1$$

$$X_3 = 1/4\ X_1$$

$$X_4 = 1/16\ X_1$$

$$Y_1 = \frac{M.O. \sin \measuredangle C}{\tan \measuredangle (A - C)}$$

$$Y_2 = L_3 \tan \measuredangle C$$

H = Height of RCB
P = Depth of Parapet
F = Depth of Frost Trough
V = M (1/COS∡A) (Vertical Height of Chute)
M = 3/4 H

Figure 7.2.4.8.1-1. Variables and equations for a parabolic flume curve

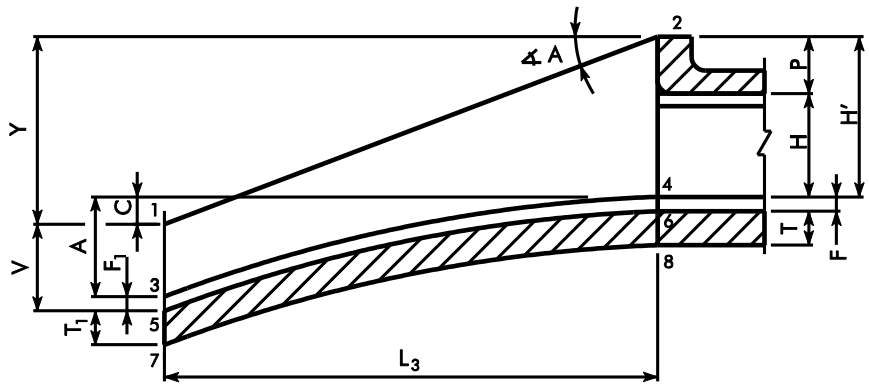

T_1 = T (1 / COS ∡ A)	AREA 1 = 1-2-4-3, sidewall
F_1 = F (1 / COS ∡ A)	AREA 2 = 3-4-6-5, floor above frost trough
V = M (1 / COS ∡ A)	AREA 3 = 5-6-8-7, floor at frost trough
Y = L_3 (TAN ∡ A)	AREA 1 = L_3 (H′ + A/3 + Y/2)
C = Y - H′	AREA 2 = (L_3 / 3) (F_1 +2F)
A = V + C - F_1	AREA 3 = (L_3 / 3) (T_1 +2T)
	AREA = SQ. FT. ONLY

Figure note:

- L_3 > H’
- See standard sheet for M dimension [BSB SS RCF-02-20]

Figure 7.2.4.8.1-2. Dimensions and estimated areas for the curved flume floor length

For typical projects the Bureau prefers that the designer use standard flume chute detail sheets for heights of 3 to 12 feet [BSB SS 1070-03 to 1070-14].

A flume usually is built on an embankment where settlement can be expected. Therefore, Bureau practice is to place a bell joint at the junction of the culvert end barrel section and the flume [BSB SS FBJ-01-20 to FBJ-09-20]. For a flume over 40 feet in length, the designer also shall provide a bell joint at the mid-point of the flume, located on the straight L_2 length below the L_3 curved length.

Typical flumes have a basin at the bottom, but stub flumes end with a cut-off wall at the bottom.

Bent U-bars placed transverse to a flume, for which the length of the bottom and vertical legs are both greater than 6 feet, are difficult to ship because of the limited width of a truck bed, 8 feet or less. Therefore, if both the bottom and vertical legs of a bent bar would exceed 6 feet in length, break the bar into three pieces and lap as shown in Figure 7.2.4.8.1-3.

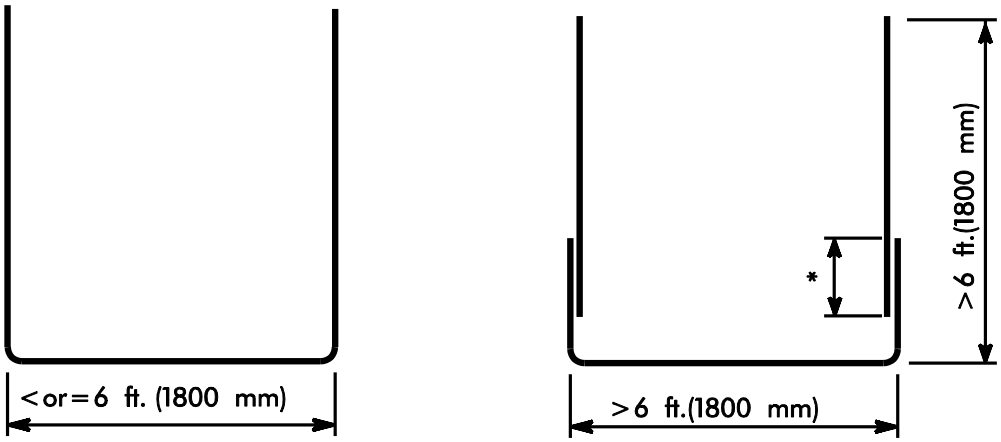

Figure note:

- See Table 7.2.4.8.1 for lap lengths

Figure 7.2.4.8.1-3. Length limits for transverse bent bars

Table 7.2.4.8.1. Lap lengths for transverse bent bars

Bar size	Minimum lap length (1)
#5	2’-0”
#6	2’-5”
#7	2’-10”
#8	3’-2”

Table note:

(1) Lap length is based on a Class B splice with material strengths of f'_c = 4 ksi and f_y = 60 ksi, a black bar condition, center-to-center bar spacing of at least 6 inches, and clear cover of at least 2 inches measured in the direction of the spacing. Higher material strengths, epoxy coating, smaller spacing, or less clear cover will require longer lap lengths.

7.2.4.8.2 Scour Floors

When appropriate for site conditions the preliminary designer will add a scour floor between the wing walls beyond the usual apron and curtain. See Figure 7.2.4.8.2 for an example.

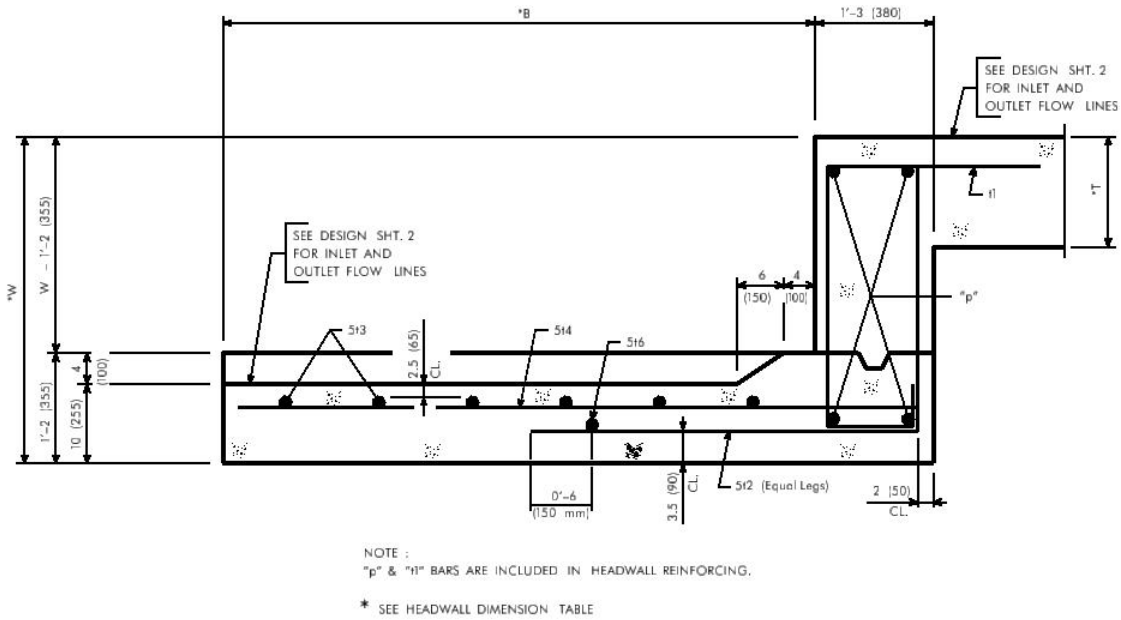

Figure note:

- The headwall dimension table and design sheet 2 would be in the plan set for the culvert and are not given in this manual.
- The scour floor is on the left.

Figure 7.2.4.8.2. Section through curtain wall and scour floor

7.2.4.8.3 Basins

Standard flume basin dimensions and reinforcement are given on standard sheets [BSB SS RCFB-01-20 to RCFB-11-20]. The lengths of the standard basins are based on a 4:1 horizontal to vertical slope, which is hydraulically sufficient based on a review by the Preliminary Bridge Design Unit using methodology established by the Saint Anthony Falls stilling basin.

The preliminary designer normally will set the flume basin floor elevation approximately 5 feet below the existing streambed. Thus the streambed typically will be one to three feet below the end of the flume. Detailers should check all available soil borings to be sure there is no bedrock at the elevation of the proposed basin.

7.2.4.9 Extensions

7.2.4.9.1 Connections

In order to initiate a clean break line, removals of culvert ends for culvert extensions require a 2.5-inch deep saw cut on the top slab, both sides of the walls, and top of the floor. Because these saw cuts will sever most reinforcing steel, the existing longitudinal reinforcing will not be incorporated into new work. Dowels, #5 x 2'-6, with a minimum embedment of 10 inches are required to connect the culvert extension to the existing culvert slab, walls, and floor. Typical locations of the dowels are given for single barrels in Figure 7.2.4.9.1-1 and for multiple barrels in Figure 7.2.4.9.1-2.

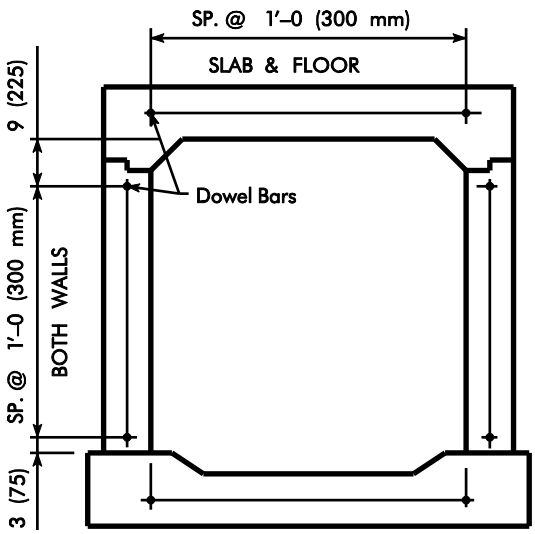

Figure 7.2.4.9.1-1. Cross section at dowels for single barrel extensions

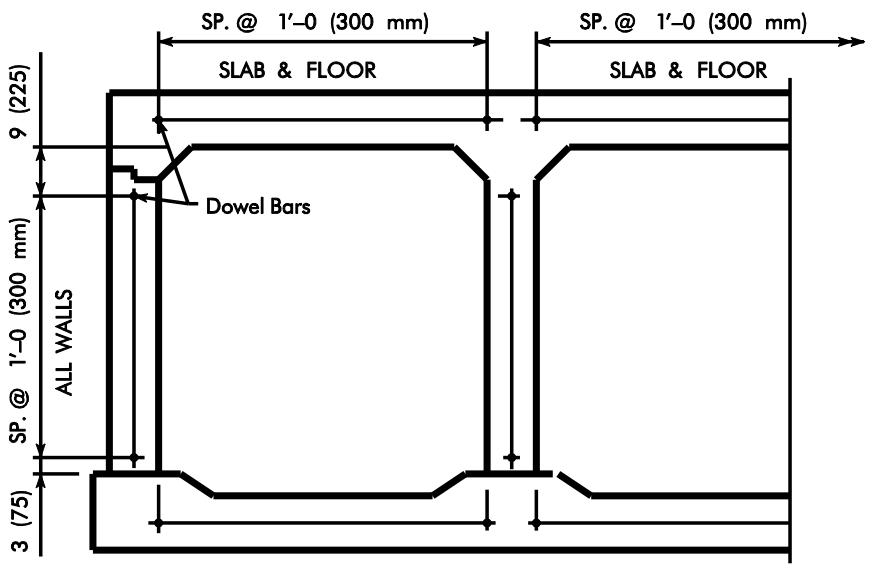

Figure 7.2.4.9.1-2. Cross section at dowels for multiple barrel extensions

The details shown in Figures 7.2.4.9.1-3 through 7.2.4.9.1-5 shall be used for connecting culvert extensions to existing culverts. The flow lines shall match at the joint between the existing culvert and the extension. A section view and plan view similar to those shown below will be required on the plans when transitions are used for the top slab, walls, or floor. The walls should be used to set the transition length, and the same transition length should be used for the slab and floor.

Any dimensional transition required between the existing structure and the extension should be a minimum of 1'-0. For transition differences between existing sections and new sections greater than 2 inches, make the transition with a 1:6 slope or shallower. For transitions over 3 feet consult with the supervising Unit Leader. The outside faces of the exterior wall transitions shall be stepped.

For metric projects the designer shall convert existing English culvert dimensions to metric with a soft conversion.

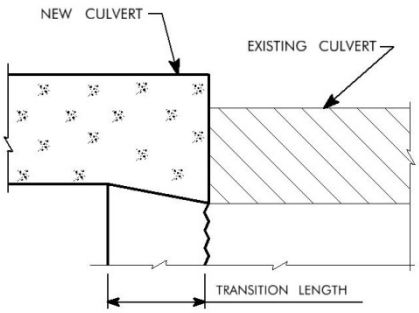

Figure 7.2.4.9.1-3. Section through top slab at extension connection

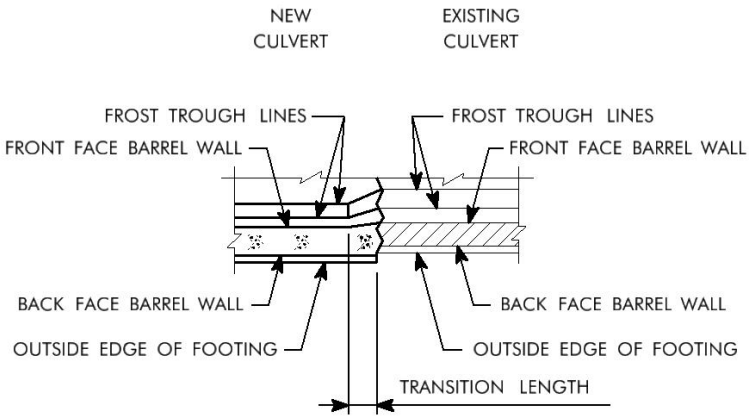

Figure 7.2.4.9.1-4. Plan of frost trough at extension connection to existing frost trough

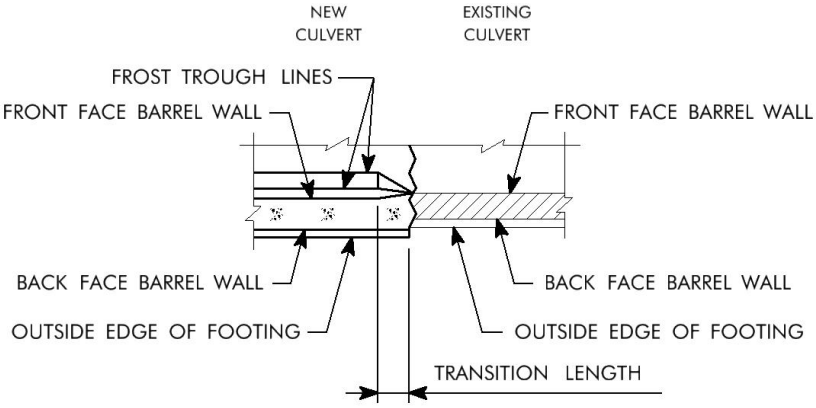

Figure 7.2.4.9.1-5. Plan of frost trough at extension connection to barrel without frost trough

When detailing extension barrel bends adjacent to skewed headwalls, follow the details shown in Figures 7.2.4.9.1-6 and 7.2.4.9.1-7. Use the minimum dimension to the bend, unless the bend occurs some distance away from the headwall, in which case the centerline barrel length shall not exceed 38 feet.

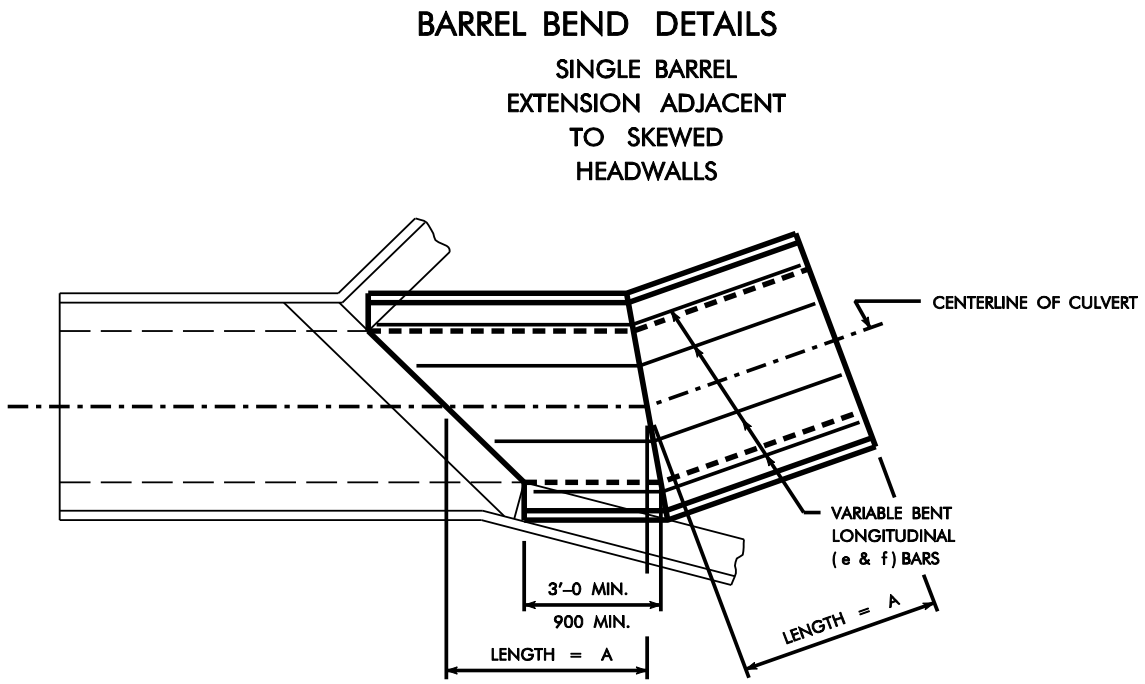

Figure 7.2.4.9.1-6. Barrel bend example for 4-foot (1.200-m) culvert span

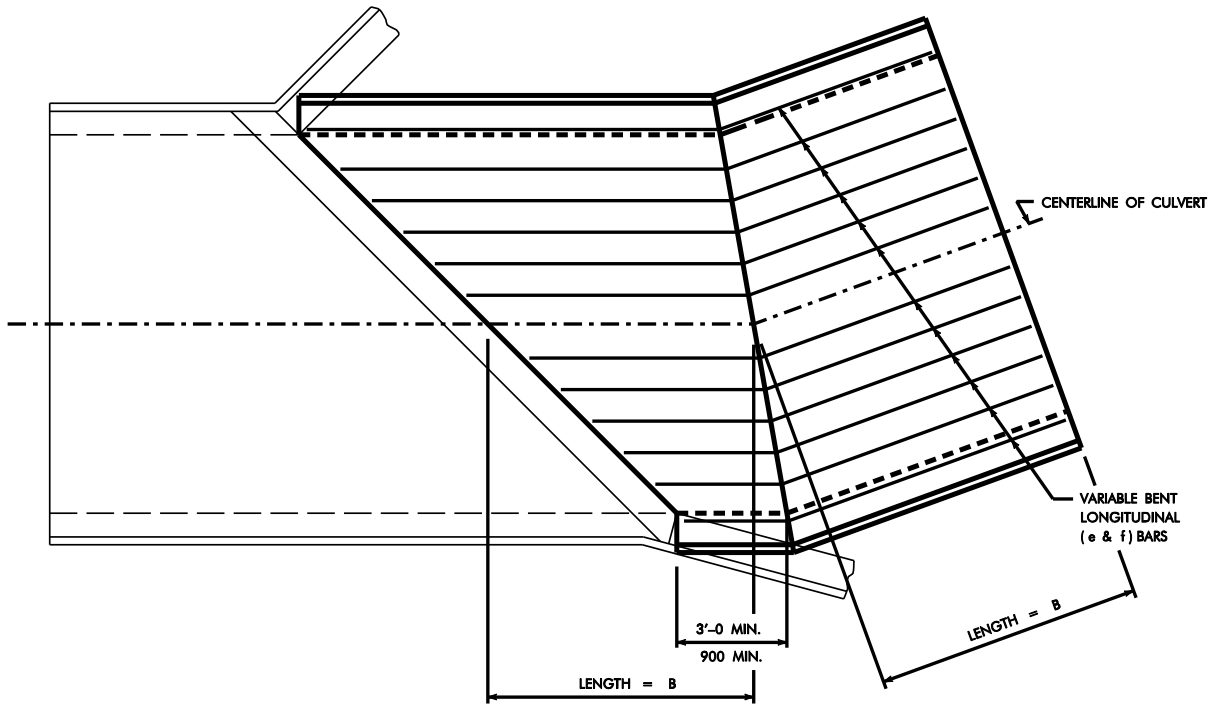

Figure 7.2.4.9.1-7. Barrel bend example for 12-foot (2.400-m) culvert span

At barrel bends, transverse bars shall be flared according to the minimum and maximum spacings specified for barrels on horizontally curved alignments [BDM 7.2.4.5.4.2].

7.2.4.9.2 Skewed reinforcement

For skewed cast-in-place single culvert extensions, the transverse bars shall be placed parallel with the skew angle of the existing parapet and flared as necessary to meet the skew of the new parapet. The designer shall not use this skewed bar placement for twin or triple culvert extensions, as discussed near the end of this article.

Placing the transverse reinforcement at the skew requires that the reinforcement be increased because it will not be parallel with the direction of the span. The increase may be achieved with larger bars and/or closer spacing. Two specific culvert barrel bars need to be adjusted: transverse bars k1 and m1. Also, with certain designs two additional bars will need to be adjusted. These are the k9 and m9 bars at the ends of a culvert section [BSB SS RCB-G3-20], which are used when the horizontal legs of corner bars do not lap across the span of the barrel. These k9 and m9 bars will be identical in bar size to their corresponding k2 and m2 counterparts and need to be adjusted for skewed placement. The adjustment for all of these bars is achieved by multiplying steel areas by the increase factor (1/cos of skew angle), by revising bar sizes and spacings accordingly, and by increasing skewed bar lengths as needed.

The following outlines the process of adjusting the bars for skew placement:

- Determine the area of steel per foot (A_s) for k1, k9, m1, and m9 from either the appropriate standard Culvert Barrel Details sheet (for the extension size and fill) or from CulvertCalc™IA output for the extension.
- Increase each area of steel by multiplying by the factor (1/cos of skew angle).
- For each increased area, select a bar size and spacing to the nearest conservative half inch. The spacing will be measured and dimensioned along the centerline of the culvert extension and, therefore, the perpendicular bar spacing will be less than the centerline dimension. Preferably the perpendicular spacing should be 6 inches or more to limit splice and development lengths.

- For bars k1, k9, m1, and m9, increase the bar length for the skew by multiplying the length by (1/cos of skew angle).
- See Figures 7.2.4.9.2-1 through 7.2.4.9.2-4 for typical single culvert skewed extension bar placement.

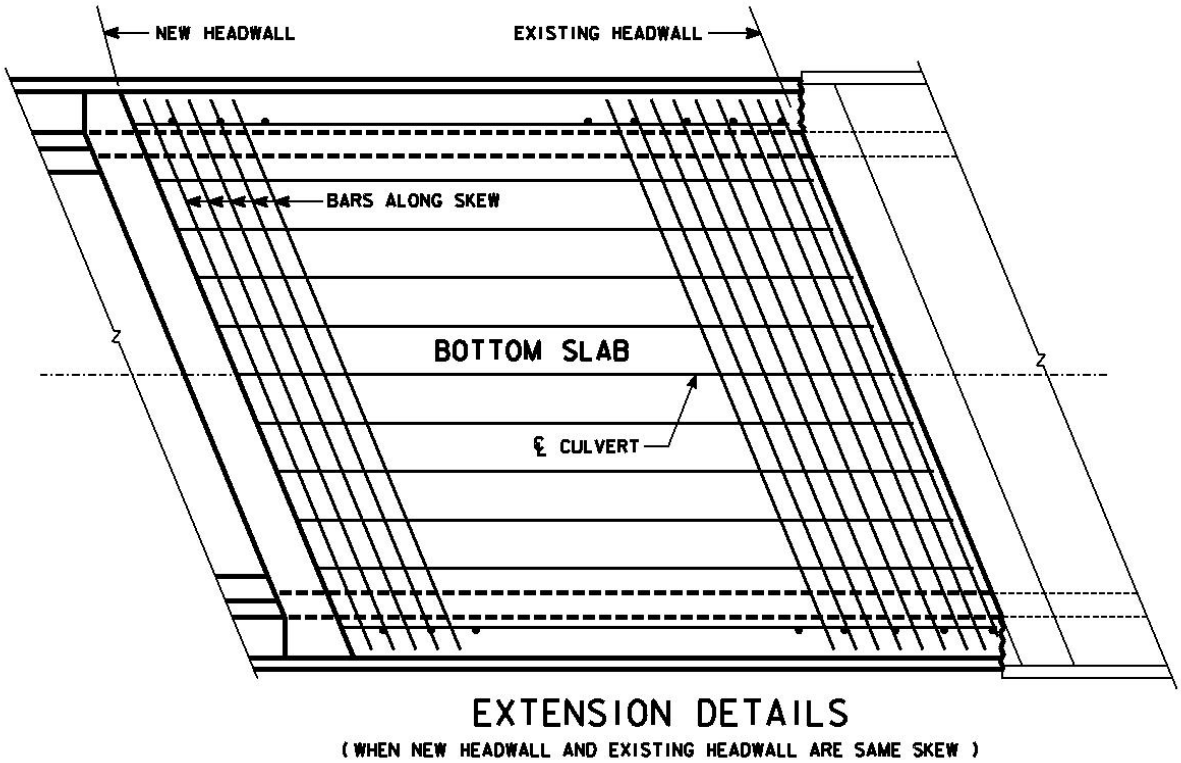

Figure 7.2.4.9.2-1. Bottom of slab skewed k1 bar layout when new headwall and existing headwall are the same skew

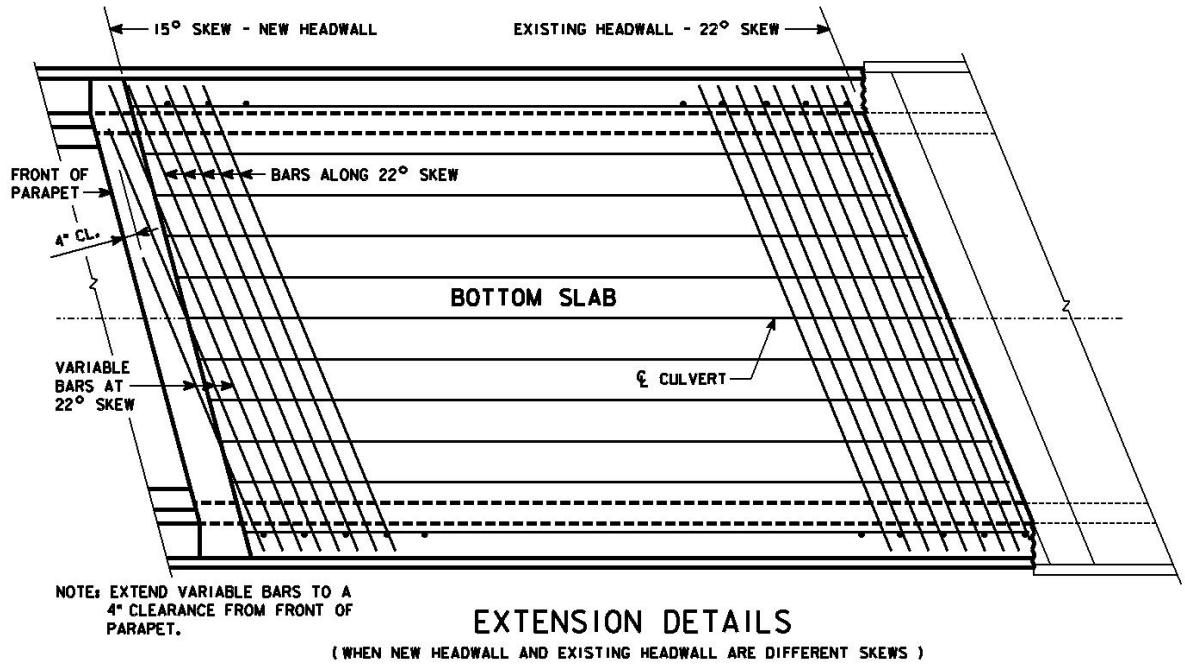

Figure 7.2.4.9.2-2. Bottom of slab skewed k1 bar layout when new headwall and existing headwall have different skews

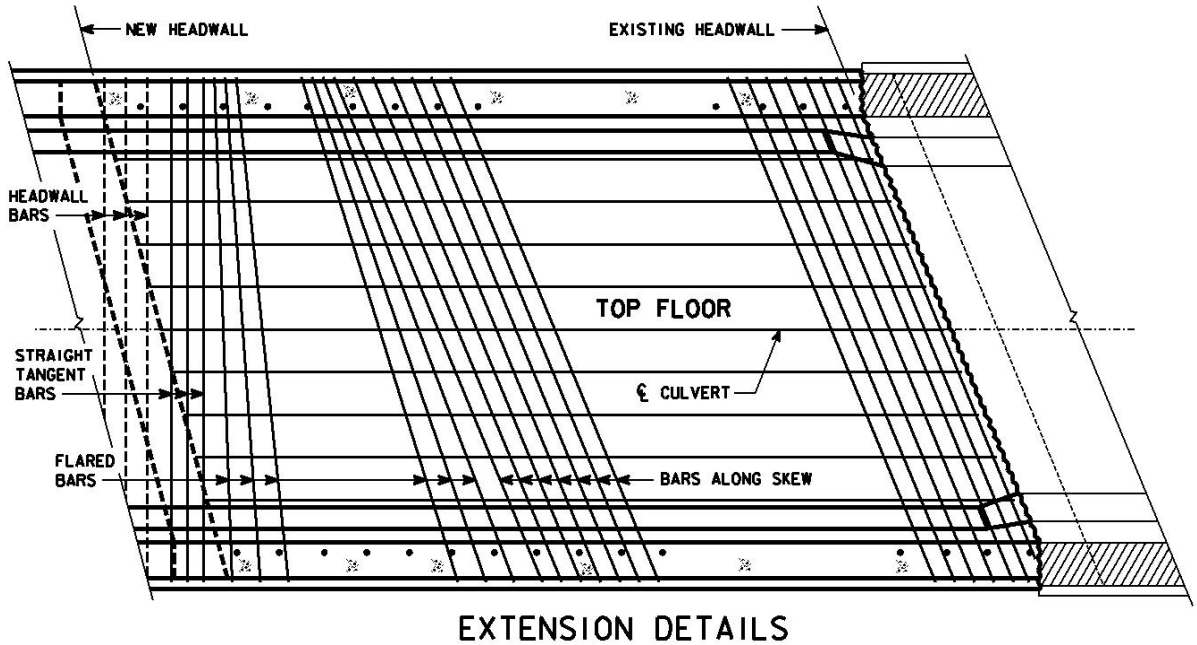

Figure 7.2.4.9.2-3. Top of floor skewed m1 bar layout

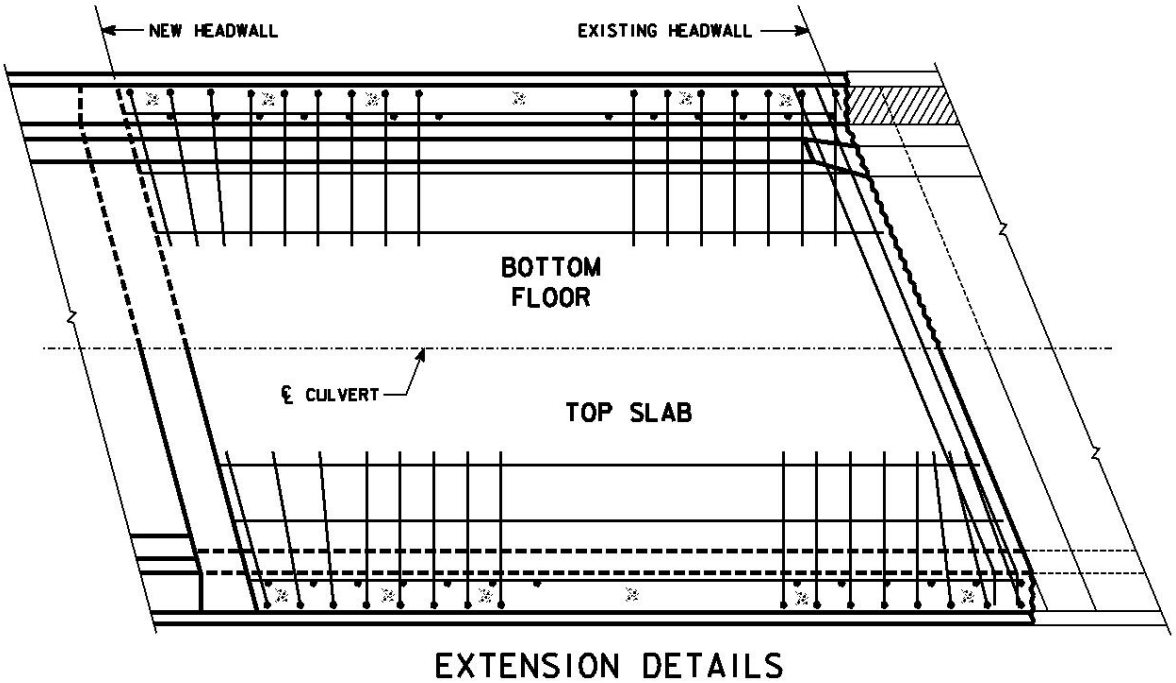

Figure 7.2.4.9.2-4. Bottom of floor and top of slab unskewed k2 and m2 corner bar layout

Skewed twin and triple culvert extensions shall be detailed with transverse and corner reinforcement placed perpendicular to the centerline of the extension as shown in Figure 7.2.4.9.2-5. Placing the reinforcement at the skew is not an option unless approved by the supervising Unit Leader.

Twin and triple transverse bars near the existing culvert headwall shall be cut off as shown in Figure 7.2.4.9.2-5. Pairs of additional bars spaced at 4.5 inches shall be provided and placed parallel with the extension connection and located in the top and bottom of the slab and floor to reinforce the edge of the barrel.

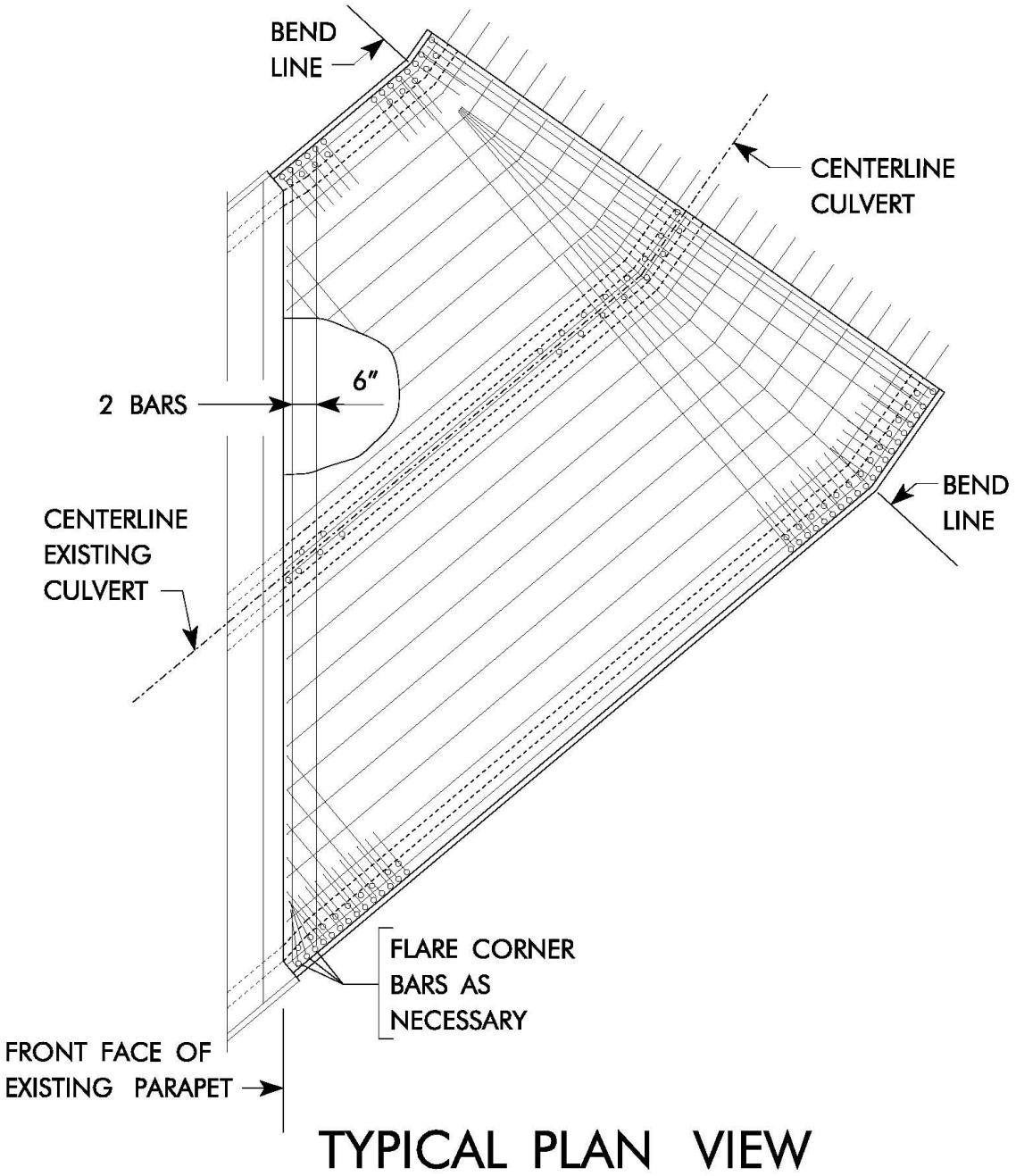

Figure 7.2.4.9.2-5. Reinforcement layout for a skewed twin culvert extension

7.2.4.9.3 Bell joints

When bell joints are to be used with an extension, a minimum of 5 feet extension along the centerline or 3 feet along the front face of the short wall shall be provided before the bell joint, as shown in Figure 7.2.4.9.3.

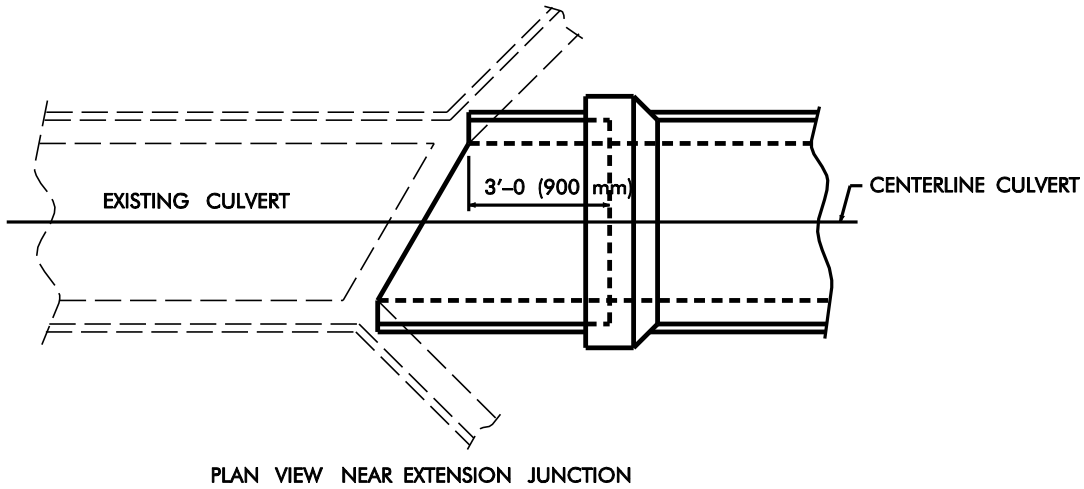

Figure 7.2.4.9.3. Single barrel extension with bell joints

7.2.4.9.4 Backfill

For culvert extensions on roads open to traffic, backfilling to the top of the culvert is to be completed within 14 working days after the curing period has expired [IDOT SS 2402.03, H, 13]. The Design Bureau will include the detail "Immediate placement of embankment at culvert extension" [DB RDD 4309] in plans for projects where a culvert extension and road work are to be accomplished at the same time.

When a culvert is to be extended with no simultaneous road work in progress, the detail [DB RDD 4309] must be included with the culvert plans. In this case the Design Bureau will provide the embankment detail and all other details and quantities required for incorporation into the Bridge Bureau's culvert plans.

7.2.4.10 Bridge replacements

In some cases, a reinforced concrete box culvert (CIP or precast) is placed and buried under an existing bridge instead of replacing the bridge. If there is adequate height under the bridge, the space is filled first with flowable backfill and then flowable mortar [DB RDD 4317] or, if there is restricted height, the space is filled entirely with flowable mortar [DB RDD 4318]. In either case the space between the underside of the bridge and top of culvert is backfilled with flowable mortar. For this type of project the culvert contractor needs information about the space between the bridge and culvert. Therefore, the designer shall give on the plans the elevation of the lowest beam (or slab) on the existing structure and the top of slab elevation of the proposed culvert. The difference in elevations shall meet the following criteria:

- For slab bridges use a minimum clearance of 3 feet between the top of the culvert slab and the bottom of the bridge low slab.
- For beam bridges use a minimum clearance of 1 foot between the top of the culvert slab and the bottom of the lowest beam. For beam spacings of 3.5 feet or less, use a minimum clearance of 3 feet between the top of the culvert slab and the bottom of the lowest beam.

Also, the designer shall provide a minimum horizontal clearance of 1.5 feet between existing substructure components and the new culvert as shown in Figure 7.2.4.10-1. It should be noted that a precast multi-barrel RCB option takes up more horizontal space than CIP. The additional space for a precast multi-barrel option is needed due to adjacent box culvert walls and required minimum space between each barrel.

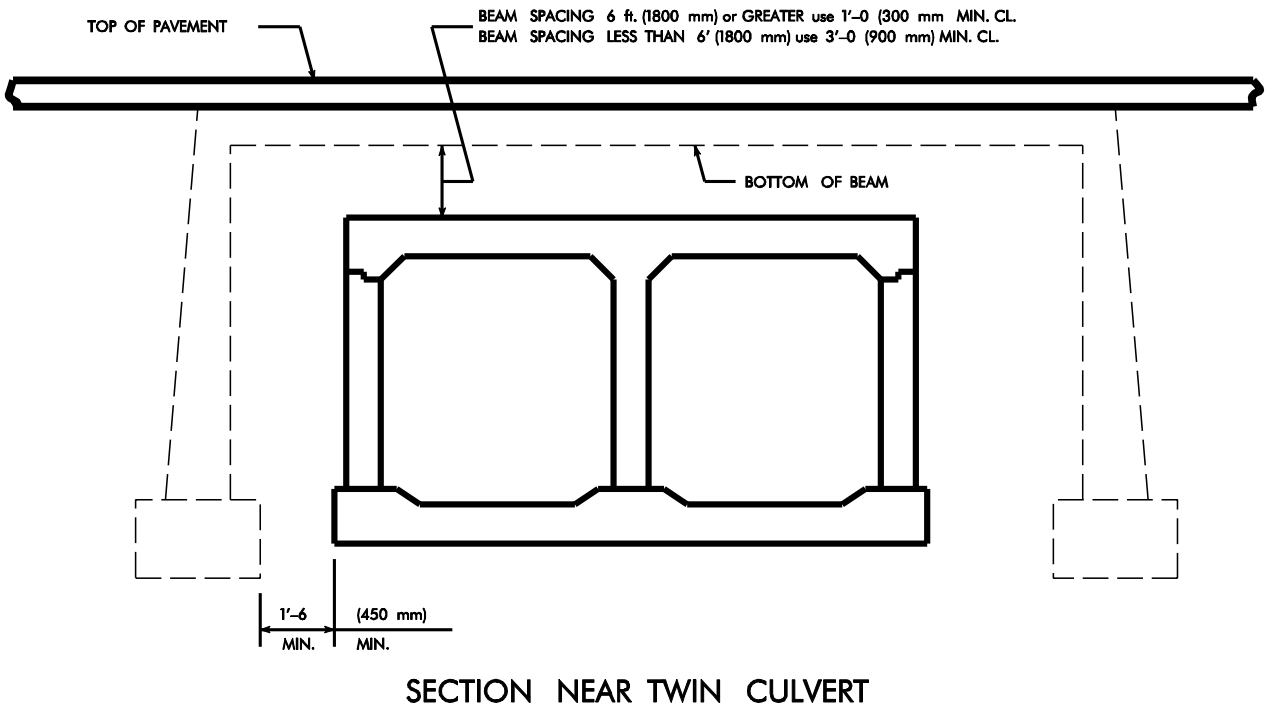

Figure 7.2.4.10-1. Clearances for a culvert backfilled with flowable mortar [Clearances in figure are incorrect.]

If any of the clearances would be less than the minimum shown above, the designer will need to consider other options such as:

- Burying the flowline of a reinforced concrete box culvert to meet vertical clearance,
- Eliminating an RCB design alternative (cast-in-place or precast) if guidance cannot be met.
- Removal of the bridge to allow an RCB.

The designer shall discuss these options with the Preliminary Bridge Design Unit. If a flowable mortar option is determined to meet clearance and constructability requirements, the designer shall refer to BDM 4.2.5 for additional requirements relative to potential settlement.

For a flowable mortar project, to ensure that all the voids under the existing bridge are filled, vent holes will be drilled in the existing bridge deck to facilitate the placement of the mortar. To assist the contractor with this type of project, the designer shall provide a vent hole layout in the culvert plans.

When developing the vent hole layout, use the following guidelines:

- Layout the existing bridge, showing the existing abutment and pier locations and dimensions. In addition, provide the location of the existing beam lines and concrete diaphragms that would restrict the flowable mortar placement.
- Locate any additional existing obstructions that would prevent the flow of mortar near the bottom of the bridge deck.
- Place vent holes along the width of the bridge deck at the same skew angle as the bridge. Along the length of the bridge place holes a minimum of 2 feet and a maximum of 8 feet away from the abutment. Across the width of the bridge the number of holes depends on beam placement and width of bridge. Place holes a minimum of 2 feet and a maximum of 8 feet on each side of all

beams. Adjacent hole spacing where there is no obstruction between holes shall be a maximum of 16 feet.

- When beams are not present, such as in a continuous concrete slab bridge, the distance from the side of the bridge to the nearest hole shall be a maximum of 8 feet. Adjacent hole spacing where there is no obstruction between holes shall be a maximum of 16 feet.
- Placement of holes along the length of the bridge should depend on existing diaphragm and pier locations and the overall length of the bridge. Locate holes a minimum of 2 feet and a maximum of 8 feet away from either side of diaphragms and piers. Each possible enclosed or restricted area shall have at least two vent holes. If possible, use a consistent spacing between holes. Adjacent hole spacing where there is no obstruction between holes shall be a maximum of 16 feet.
- When diaphragms are not present, adjacent hole spacing where there is no obstruction between holes shall be a maximum of 16 feet and a minimum of 10 feet.

Figure 7.2.4.10-2 shows a sample vent hole layout for a skewed bridge.

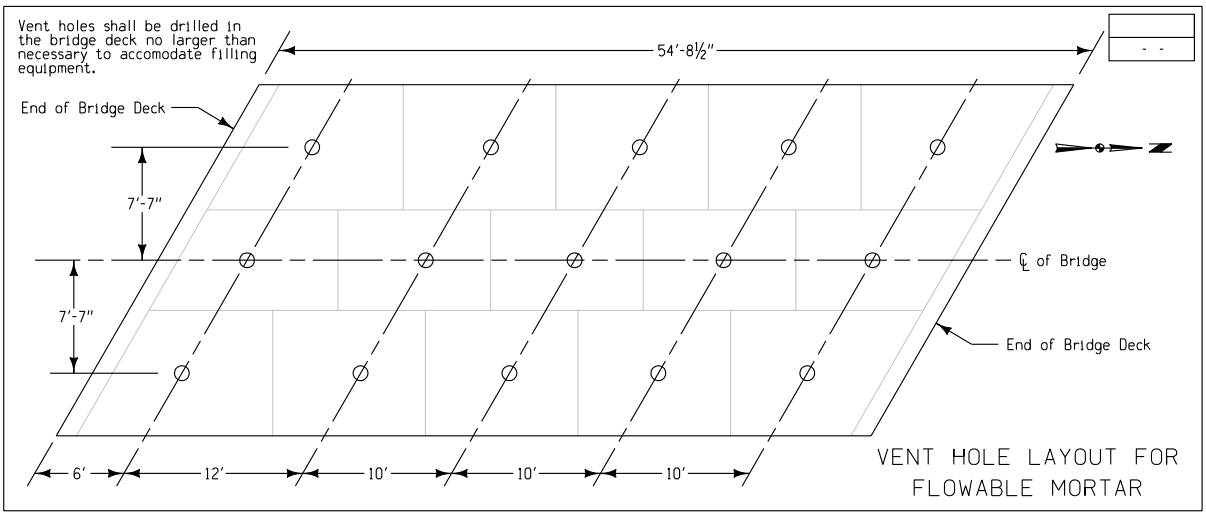

Figure 7.2.4.10-2. Example vent hole layout for a skewed bridge

If the depth of flowable mortar is greater than 5 ft, the designer shall consult with the Soils Design Unit for alternatives.

This type of project usually involves removing the bridge rail from the existing bridge structure after the new culvert has been put in place. If construction of the culvert is part of a paving project, then it is possible the paving contractor may subcontract the culvert work. In such cases, the work of removing the bridge rail may be performed by the paving contractor since this work is typically performed well after the installation of the culvert. In such cases, it is still preferred to include the rail removal bid item with the other culvert bid items since it is generally the responsibility of BSB to ensure that all items with respect to the culvert and bridge are appropriately addressed in the culvert plan sheets. Regardless of where the bridge rail removal item is placed, the designer shall coordinate with road design to ensure all bid items are addressed and not duplicated.

7.2.4.11 Miscellaneous

7.2.4.11.1 Fish baffles or weirs

In some cases the Iowa Department of Natural Resources (Iowa DNR) will require that a reinforced concrete box culvert be detailed for fish passage. Depending on fish characteristics and site conditions, fish passage will require an arrangement of baffles or weirs on the floor of a culvert. The Preliminary

Bridge Design Unit will determine the size, spacing, and arrangement, and the designer should follow the guidelines below and use the standard sheets noted:

- Baffles are placed part way across the culvert floor at an angle [BSB SS 1060].
- Weirs are placed completely across culvert openings [BSB SS 1061].
- Baffles or weirs shall not be placed across the culvert joints.
- When baffles or weirs are used, a rock splash basin shall be installed at the outlet end of the culvert as shown in Figure 7.2.4.11.1.

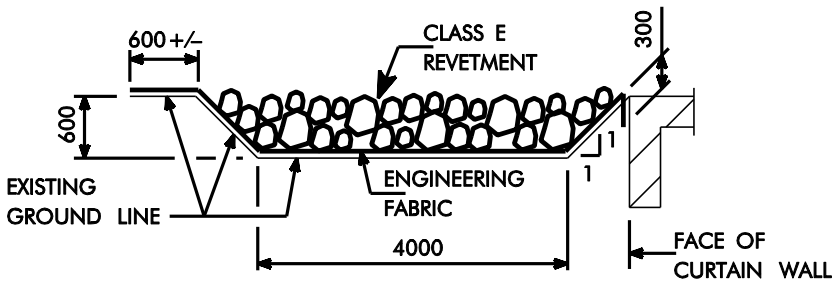

Figure note:

- All dimensions are in millimeters.

Figure 7.2.4.11.1. Rock splash basin at outlet end of culvert

7.2.4.11.2 Drain pipe anchors

In some cases corrugated metal pipe (CMP) or polyethylene pipe (PEP) drainage lines need to be anchored to the tops of wing walls or flumes. For each pipe, the designer shall include in the plans two bars similar to the 5fa fence anchors shown on the “Bill of Reinforcing” on standard flared wing headwall sheets. A detail for a pipe anchor bar is given in Figure 7.2.4.11.2.

The designer also shall require the contractor responsible for furnishing and placing the pipe to furnish and install a ¼-inch diameter galvanized cable over the pipe and clamps to secure the cables.

The designer should indicate on the plans the spacing between the pipe anchor bars and the centerline of the pipe with respect to the front face of the parapet. See Figure 7.2.4.11.2.

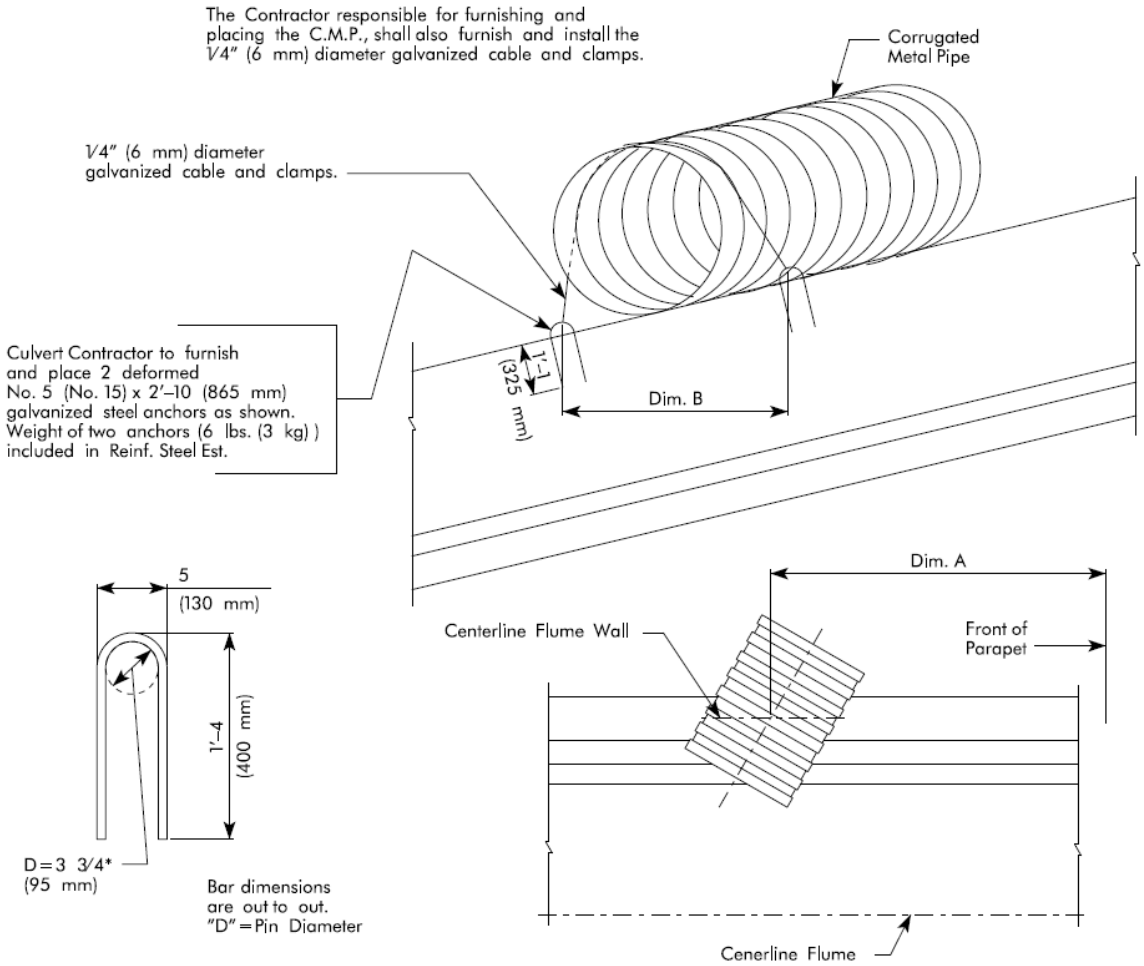

Figure 7.2.4.11.2. CMP anchorage at top of wing wall or flume

7.2.4.11.3 Pipe hand railings

For safety, where pedestrians or bike riders are likely to be near reinforced concrete box culvert inlets or outlets, the preliminary designer will require pipe hand railings at culvert parapets and drop inlets. The pipe hand railings should be detailed with the following considerations:

- Ease of handling and transporting and
- Size of galvanizing tanks [BDM 7.2.4.7.2].

General pipe hand railing details are shown in Figures 7.2.4.11.3-1 to 7.2.4.11.3-3. All posts are to be set vertical. In rural areas the designer should use the horizontal rail spacings shown in Figure 7.2.4.11.3-1 and embed posts one foot into concrete walls. In urban areas the designer should use the horizontal rail spacing shown in Figure 7.4.4.10.1-2 and select the base plate detail so that the hand railing can be replaced easily.

The hand railing sections shall be galvanized after fabrication. Drain holes to facilitate the hot dip galvanizing process shall be shown on the railing shop drawings.

The method of measurement for pipe hand railing is the length from end to end of railing [IDOT SS 2414.05, B].

For drop inlets in rural and urban locations, the railings should be detailed to show the centerline of the top rail to be 3'-6 above the top of the drop inlet walls, which also should be 3'-10 above the flowline of the weir. In rural locations the centerline of the bottom rail is to be 1'-9 below the centerline of the top rail. In urban locations the horizontal rails shall be spaced at 7 inches as shown in Figure 7.4.4.10.1-2.

Parapet hand railings for rural locations are detailed the same as for drop inlets, as shown in Figure 7.2.4.11.3-4. However, parapet hand railings for urban locations need to be taller, 4’-8 as shown in Figure 7.4.4.10.1-2.

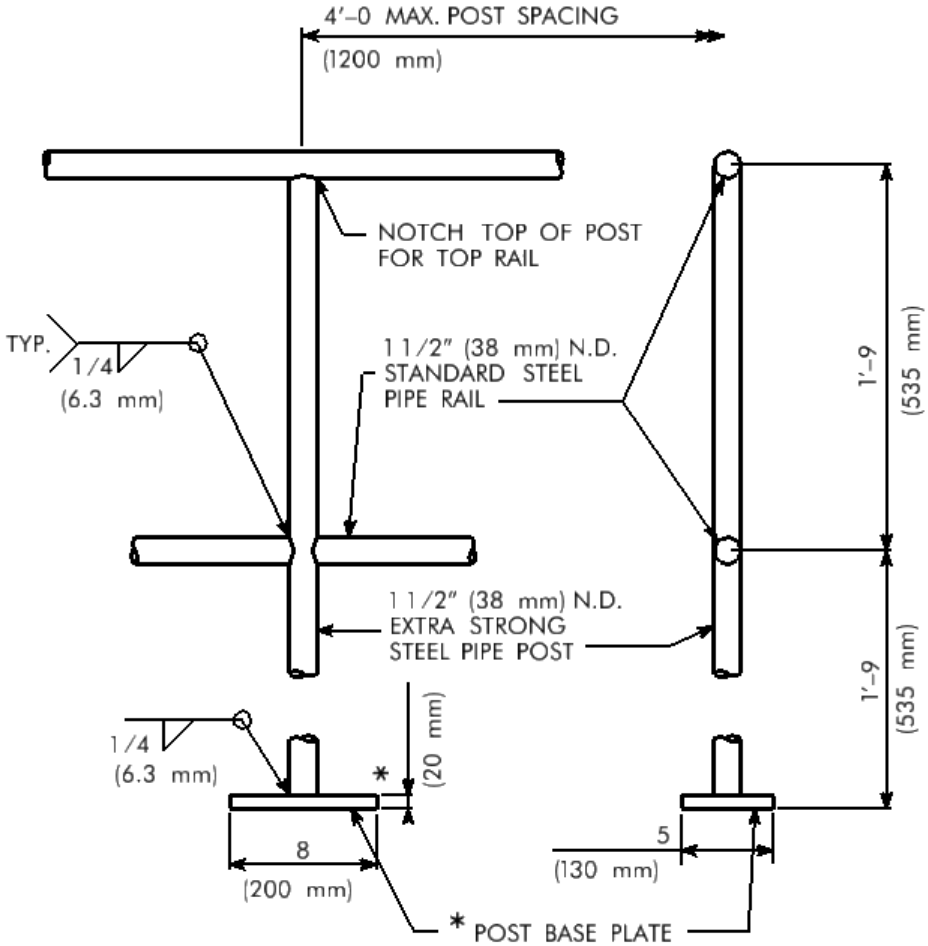

PIPE HANDRAIL DETAILS

* POST BASES ARE TO BE USED IN URBAN AREAS, OTHERWISE EXTEND POST 1′–0 (300 mm) INTO THE WALLS OF THE DROP INLET.

Figure 7.2.4.11.3-1. Typical pipe hand railing details

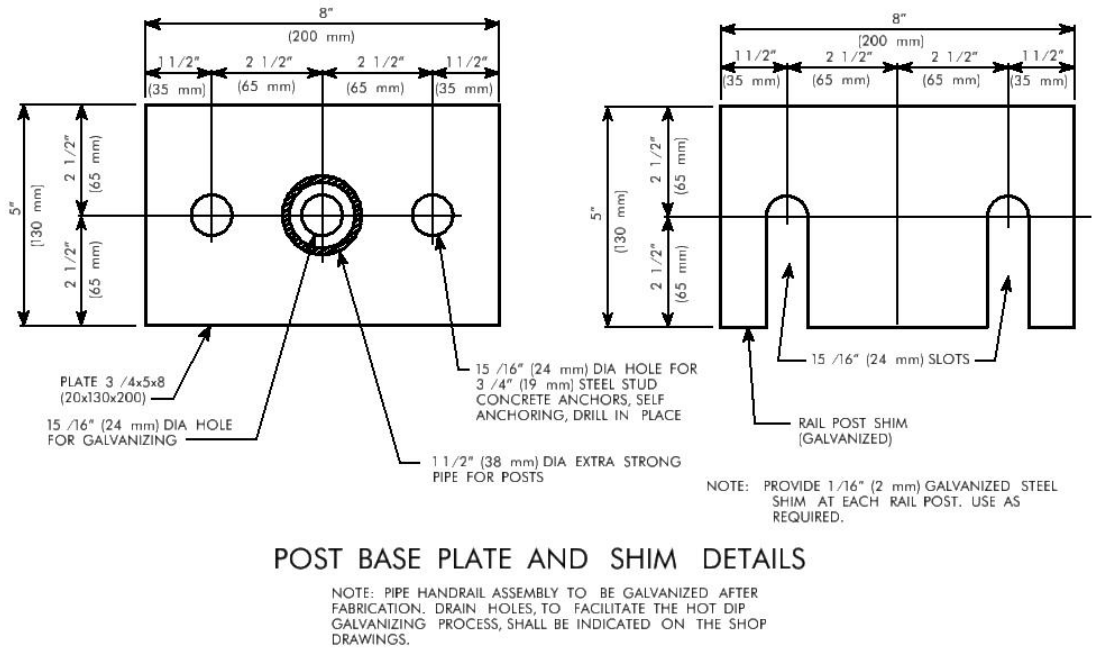

Figure 7.2.4.11.3-2. Typical urban post base plate and shim details

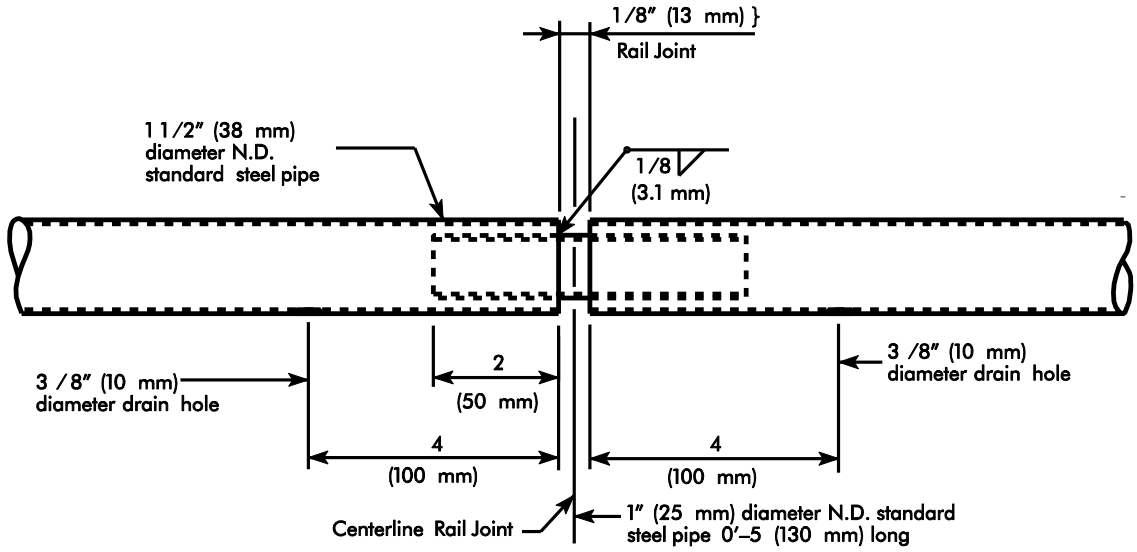

Figure 7.2.4.11.3-3. Typical rail joint detail

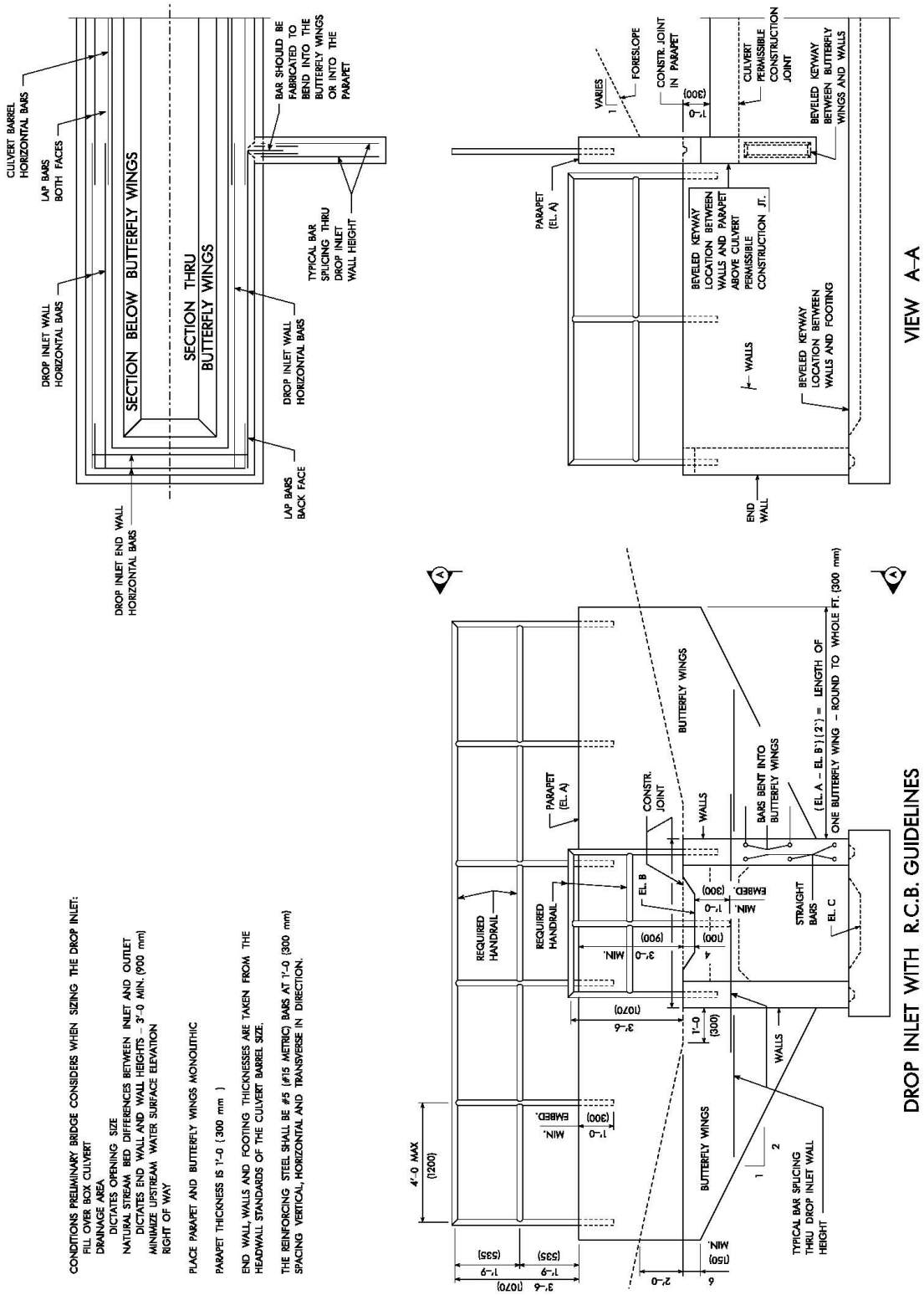

Figure 7.2.4.11.3-4. Rural reinforced concrete box culvert railings

7.2.4.11.4 Pedestrian Culverts

Culverts designed for pedestrian use, will typically have the following characteristics.

- A 12’ X 11’ minimum size.
- A minimum 0.5% longitudinal slope to prevent ponding.
- No frost troughs for CIP culverts because of ADA requirements.
- A one foot deep cutoff wall.
- Flared end sections.
- Railing on end sections to meet fall protection requirements.

See BDM 1.5.3 and 3.5 for additional information. A precast option shall normally be required (BDM 7.3.4.2.4).

Some culverts may require the following if requested by the local planning authority.

- Galvanized light fixture boxes and rigid steel conduit cast into the concrete for CIP boxes.
- A structural concrete coating of light color to accentuate the lighting followed by a compatible anti-graffiti coating. When used, coatings are only applied to ceiling and interior wall concrete surfaces as well as the exposed surfaces of the tunnel headwalls except for the top and back of parapet. Do not apply the coating to the walking surface.

These parameters may vary depending on the project and should be verified with BSB before starting a pedestrian culvert design.

7.3 Precast concrete box

Unless otherwise specified, for primary road projects the Bureau now allows both cast-in-place and precast box culvert alternates under the following project conditions:

- The culvert is an Iowa DOT standard size single, twin or triple box with standard size headwalls at both ends. For precast twin and triple box culverts use two or three side-by-side standard size precast single boxes, respectively [BSB SS 1082P],
- The barrel span or spans are each 6 to 16 feet,
- Design earth fill heights are in the range from 2 feet to 25 feet for 6’ to 12’ spans and 2 feet to 16 feet for 14’ and 16’ spans,
- The culvert is not placed directly on bedrock,
- Anticipated culvert settlement is less than 12 inches for a single line of single cell boxes and less than 6 inches for side-by-side single cell boxes and multiple cell boxes under these fill heights, and
- There are no conditions requiring bell joints.

Culverts with bends, drop inlets, scour floors, and other details which are only available with cast-in-place box culverts will only be approved on a case-by-case basis.

Projects meeting these requirements will require the designer to develop plans showing two alternate designs: one for cast-in-place, and one for precast. The designer shall prepare the plans with details and quantities that address both alternates. The Contracts and Specifications Bureau will prepare the bidding documents to allow the contractor to bid on either plan alternate.

For a precast alternate there are three options. Standard precast box designs and details from Option A or B are required when the box size, fill height, and skew meet the limits found in those options. Option C may only be utilized when non-standard box designs are required. Non-standard box designs are only required when box size, fill height or skew do not meet the criteria under Option A or B. Fabricators shall not substitute their own designs and details for any of the three options.

> Option A: ASTM C1577 with the end sections and associated details in Iowa DOT Single Precast Reinforced Concrete Box Culvert Standards

- The precast barrel sections shall meet the minimum requirements of ASTM C1577, Table 1.
- Skew shall not exceed 30 degrees.
- The box tie, end section, lintel beam, curtain wall, and embankment protection details shall be taken from Single Precast Reinforced Concrete Box Culvert Standards. General notes, specifications, and design stresses on Sheet PRCB G1-20 also shall apply.

Option B: Iowa DOT Single Precast Reinforced Concrete Box Culvert Standards

- The precast barrel sections, end sections, and details shall be taken from Single Precast Reinforced Concrete Box Culvert Standards.
- The standards may be used for skews of 45 degrees or less.

Option C: ETCulvert designs (or equivalent) for non-standard designs with the end sections and associated details in Iowa DOT Single Precast Reinforced Concrete Box Culvert Standards

- The precast barrel sections must be designed with ETCulvert (or equivalent) following design criteria used in the development of the standards under Option B which include some of the following conditions:
    - The live load distribution factor through fill shall be 1.00.
    - The minimum load factor for horizontal earth pressure shall be 0.90.
    - The maximum reinforcement ratio shall be set to $0.634\rho_b$ to ensure tension controlled sections for flexural design. The maximum reinforcement in the culvert walls shall not exceed 4% of the gross section.
    - See Single Precast Reinforced Concrete Box Culvert Standards for permissible reinforcement clearances and other design requirements.
- The box tie, end section, lintel beam, curtain wall, and embankment protection details shall be taken from Single Precast Reinforced Concrete Box Culvert Standards. General notes, specifications, and design stresses on Sheet PRCB G1-20 also shall apply.

The contractor shall submit shop drawings for review and documentation. The Contractor shall allow 30 working days for the Engineer's shop drawing review. The designer may only use Option C if barrel span and/or height dimensions are different from those in the standards or if fill heights exceed 25 feet, or if skews exceed 45 degrees.

For submission of shop drawings the contractor may download and use the precast box culvert submittal sheets available on the Bridges and Structures Bureau web page.

The Iowa DOT Single Precast Reinforced Concrete Box Culvert Standards were developed from Minnesota DOT precast concrete box culvert standards, but the Bridges and Structures Bureau has chosen to deviate from those standards based on past Iowa practice and other factors. Culvert fabricators that serve both states need to consider the differences carefully.

Following are the plan development guidelines for projects when precast concrete boxes are required or an alternate to cast-in-place culverts. Both the precast and cast-in-place culverts would be considered alternates.

- Preliminary Bridge shall prepare the preliminary design (TS&L) for a single, twin or triple precast culvert length when precast is required and cast-in-place is not an option.
- If a single, twin or triple culvert structure is a candidate for either a precast or cast-in-place culvert, Preliminary Bridge will prepare the preliminary design (TS&L) for a cast-in-place culvert length and will provide dual dimensions for the precast length left and right and total length back to back of parapet (including "G" dimension). The final detailer should copy the preliminary TS&L CADD file designed for the cast-in-place culvert and change the Situation Plan/Longitudinal Section to represent the precast culvert alternate, adjusting the length according to the dimensions given.
  The final detailer should note the following when determining the precast culvert length:
    - The foreslope for a precast culvert should intercept the bottom of the parapet (lintel beam) which would make the overall length longer than the alternate cast-in-place culvert

where the foreslope intercepts the top of the parapet. Compare Figure 7.3 below with Figure 7.2.

- The overall length for the precast culvert will include the end to end of barrel length plus the additional barrel length included with the headwalls at each end of the culvert. The end to end of barrel length should be adjusted so it is a whole foot length. The overall length for the precast culvert from back to back of parapet (lintel beam), the end to end barrel length and the additional barrel length as part of the headwalls, indicated as the 'G' dimension in the precast culvert standards, shall be dimensioned on the TS&L.

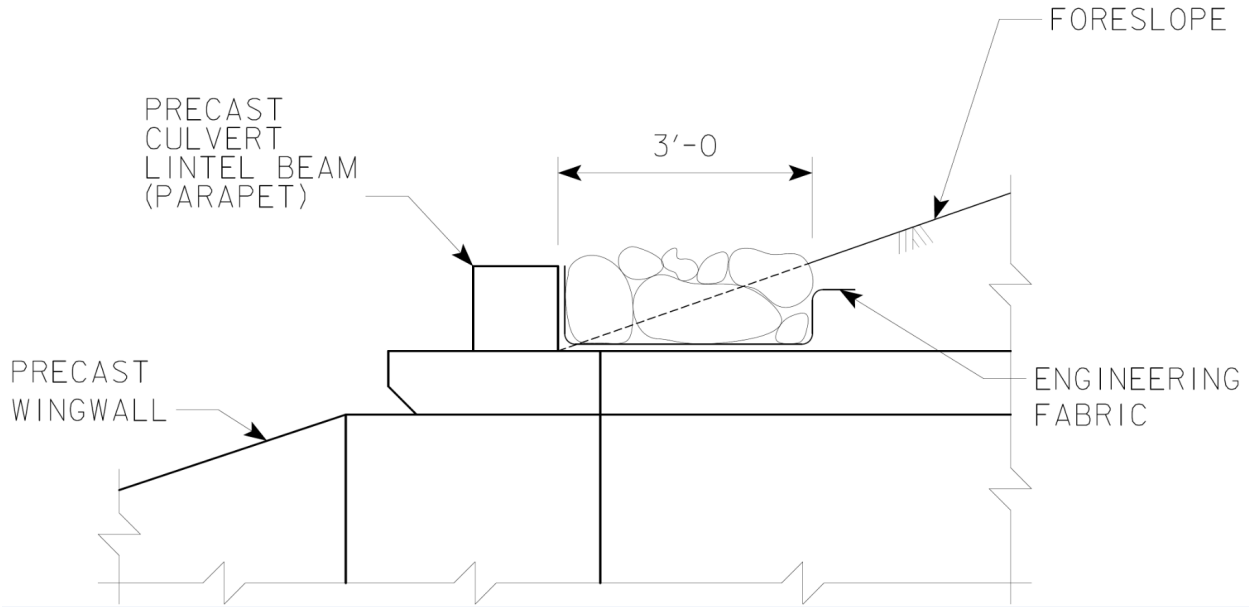

Figure 7.3. Foreslope-Lintel beam intersection diagram

- Show Class E revetment around both headwalls as on the standard sheet [BSB SS PEP 12-20].
- If the back to back dimensions for the precast alternate are not given, the Final Designer shall check with Preliminary Design for the appropriate dimensions before proceeding.

- The design earth fill height shown on the plans for the cast-in-place alternate should remain the same for the precast alternate.
- The final detailer shall prepare one title sheet with two alternate sets of detail plans, one for the cast-in-place culvert and one for the precast culvert. This will result in two sets of Estimated Quantities with notes on the Index of Sheets table on the title sheet. Cast-in-place and precast culvert details will be as normally shown with referral to the Iowa DOT Box Culvert Standards.
- Projects with multiple culvert designs shall include a culvert estimate sheet for each alternate design (precast and cast-in-place). The location of each Estimated Quantity table should be noted in the Index of Sheets on the Title Sheet.
- These are the V8 model naming conventions:

  The cast-in-place naming convention is CCDDDDSC01, CCDDDDSC02P, CCDDDDSC03, etc. The SC represents Sheet Cast-in-place models.

  Precast naming convention is CCDDDDSP01, CCDDDDSP02P, CCDDDDSP03, etc. The SP represents Sheet Precast model names.

  Both cast-in-place and precast V8 models are in the same V8 file because all details are for the same project.

  The CC which is County Number and DDDD is Design Number are the same for both cast-in-place and precast plans.

7.3.1 Loads

Design loads for a precast box culvert are generally the same as for a cast-in-place RCB of the same size, span, and height of fill. See the loads articles for reinforced concrete box culverts [BDM 7.2.1]. The standard precast designs are currently based on a fill interaction factor (i.e. live load distribution factor) of 1.00.

7.3.2 Load application

Load application for a precast box culvert generally is the same as for a cast-in-place RCB of the same size, span, and height of fill. See the precast Option C conditions [BDM 7.3] and load application articles for reinforced concrete box culverts [BDM 7.2.2].

7.3.3 Analysis and design

Precast concrete box culverts shall be designed structurally by the load and resistance factor design (LRFD) method. The LRFD analysis and design requirements for the ASTM C1577 barrel sections (Option A) are contained in the aforementioned document. The LRFD analysis and design requirements in this section specifically apply to Options B and C. Any designs performed under Option C [BDM 7.3] shall be based on the LRFD design criteria used in the development of the Option B standards. For design conditions that do not fit the available standard designs in Options A or B or if Option C [BDM 7.3] is chosen the Bureau prefers that the precast box culvert producer uses software endorsed by the American Concrete Pipe Association (ACPA): ETCulvert on which the Option B standards are based, or equivalent software. Options A and B generally require no analysis and design.

The minimum floor, slab, and wall thickness for culverts with 6-foot spans is 8.0 inches. For culverts with spans of 8-foot to 12-foot, the minimum thicknesses are 8.0 inches for walls, 9.0 inches for the slab, and 10.0 inches for the floor. For culverts with spans of 14-foot, the minimum thicknesses are 8.0 inches for walls, 10.0 inches for the slab, and 10.0 inches for the floor. For culverts with spans of 16-foot, the minimum thicknesses are 8.0 inches for walls, 10.0 inches for the slab, and 11.0 inches for the floor. The maximum desirable thickness for any member of any culvert size is 12.0 inches. If this requirement cannot be met when assuming a concrete compressive strength of f'c = 5 ksi without the addition of shear reinforcing, a concrete compressive strength of f'c = 6 ksi may be used.

The standard precast designs assume traffic is travelling parallel to the span. This assumption is considered to provide adequate designs for culverts skewed to a maximum of 45 degrees. The standard precast designs may need to be redesigned if skew angles exceed 45 degrees.

When the Soils Design Unit or geotechnical consultant does not provide site-specific information the designer should use the following cohesionless soil properties in design.

- Angle of internal friction (φ) 30 degrees
- Unit weight of saturated soil 0.135 kcf
- Unit weight of dry soil 0.120 kcf
- Unit weight of water 0.0624 kcf

In general, the designer should model components of box culverts using typical 12-inch wide strips for analysis and design.

7.3.4 Detailing

Reserved.

7.3.4.1 Extensions

On a case-by-case basis the Bureau allows precast culvert extensions of existing single cast-in-place or precast box culverts. For an extension the contractor has the same three design options as for new precast culverts [BDM 7.3].

Except for the connection between the existing culvert and extension covered by standard sheets [BSB SS 1043P-1045P], precast box culvert extension projects are treated the same as new precast box culvert projects.

7.3.4.2 Miscellaneous

7.3.4.2.1 Fish baffles or weirs

In some cases the Iowa Department of Natural Resources (Iowa DNR) will require that a precast box culvert be detailed for fish passage. Depending on fish characteristics and site conditions, fish passage will require an arrangement of baffles or weirs on the floor of a culvert. The Preliminary Bridge Design Unit will determine the size, spacing, and arrangement, and the designer should follow the guidelines below and use the standard sheets noted:

- Baffles are placed part way across the culvert floor at an angle [BSB SS 1060P].
- Weirs are placed completely across culvert openings [BSB SS 1061P].
- Baffles or weirs shall not be placed across the culvert joints.
- When baffles or weirs are used, a rock splash basin shall be installed at the outlet end of the culvert as shown in Figure 7.2.4.11.1.

7.3.4.2.2 Weep holes

In cases such as a nearby natural spring, high water table, or use of a drainage blanket where it is advisable to reduce hydraulic pressure on a precast concrete box culvert, the Soils Design Unit or preliminary designer will recommend that weep holes be placed in exterior walls. The 4-inch diameter weep holes normally are placed in pairs, with the bottom hole one foot above the flow line. The top hole is placed one foot above the bottom hole and offset one foot, as shown in Figure 7.3.4.2.2-1. Weep hole spacing is typically 25 to 30 feet.

Each hole is covered with a rodent screen consisting of a 24-inch square by 1/4 inch galvanized hardware cloth centered on the weep hole. Normally the culvert contractor is required to place porous backfill over the weep holes, as shown in Figure 7.3.4.2.2-2, and also to furnish and place special backfill material when completing the Class 20 excavation.

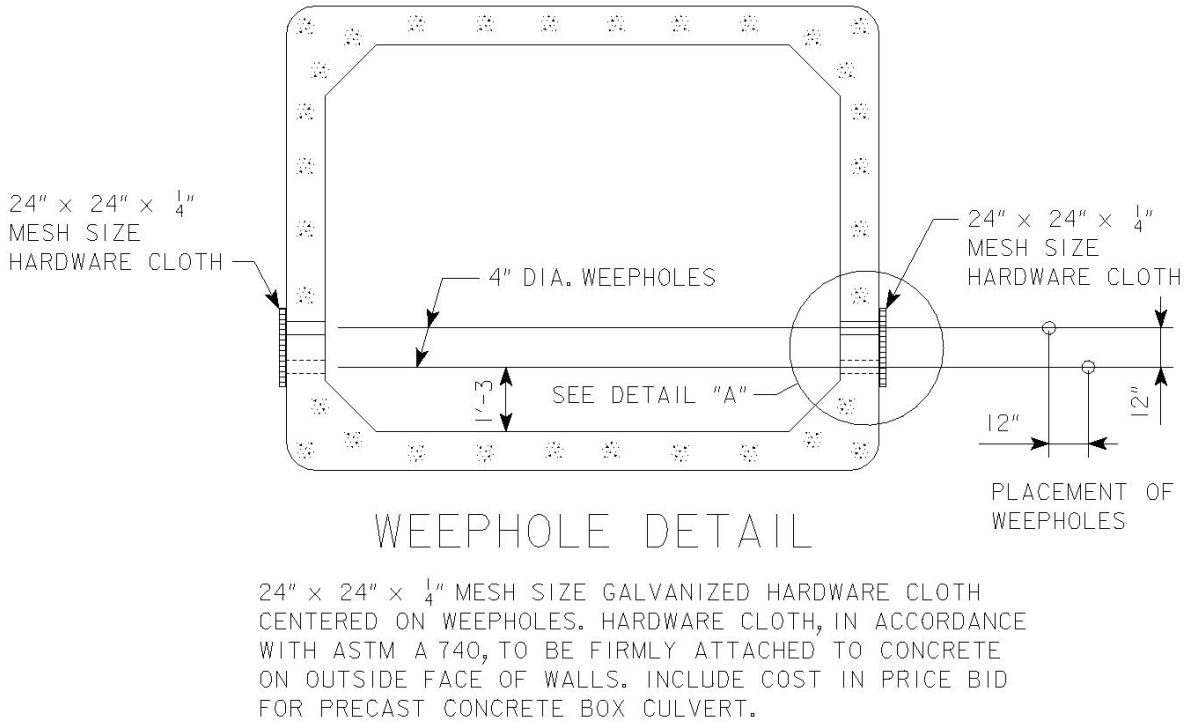

Figure 7.3.4.2.2-1. Exterior wall weep hole detail

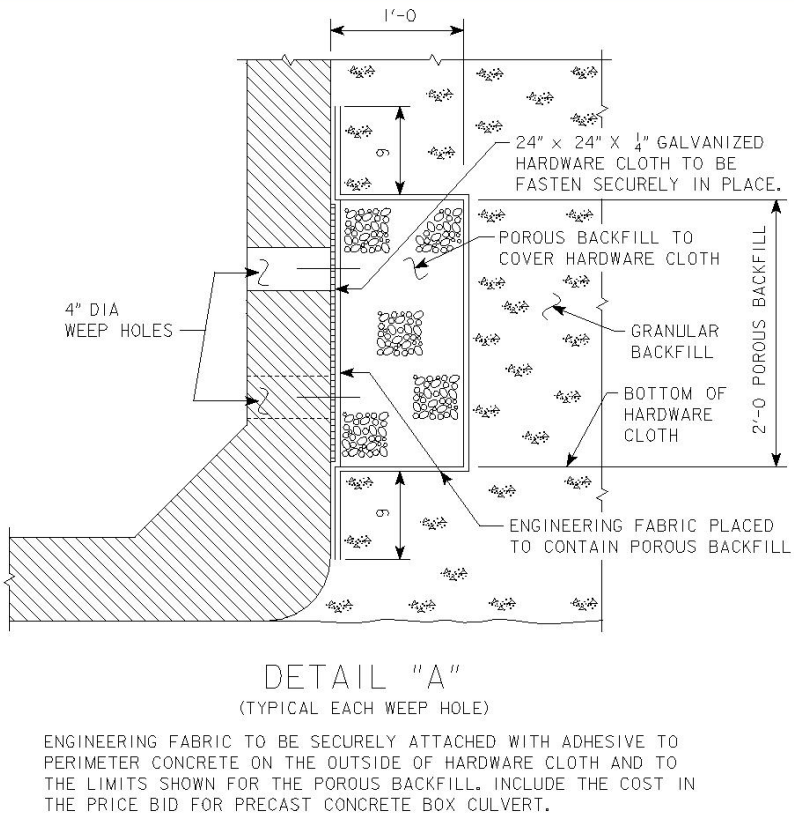

Figure 7.3.4.2.2-2. Typical individual weep hole detail

7.3.4.2.3 Bridge replacements

Reinforced concrete box culverts are sometimes placed and buried under an existing bridge instead of replacing the bridge. A precast box culvert should be included as an option for these types of projects. Refer to BDM 7.2.4.10 in addition to the guidelines given in this article.

In many cases, precast boxes cannot be lifted and set into place underneath a bridge due to low overhead clearance. Additionally, poor ground support conditions combined with the large construction equipment needed to lift and place the boxes under the bridge makes this method of placement difficult. As a result, contractors must often employ alternative installation approaches such as sliding boxes into place. While sliding is the most common alternative approach, the methods and materials used by different contractors to accomplish a sliding installation can be quite varied. The results of a sliding installation can also be quite varied with the following concerns being most prevalent: box damage particularly to the tongue and groove portions, final box support conditions which induce stress concentrations, and increased risk for piping. In order to mitigate the potential for these issues, project plans with precast boxes shall include CADD Note E685 which requires the contractor to submit a precast box installation plan for review and approval.

Acceptable methods and materials for a sliding installation might include the following. (Note that this list is only illustrative and is not intended to be exhaustive.)

- A full-width 8-inch thick unreinforced concrete pad as a sliding support surface. The concrete pad should typically terminate at least 18” from the end of any box in its final position. The top surface of the pad should be smooth. An approved lubricant may be applied to the concrete pad to reduce sliding friction.
- Construction equipment used in the sliding operation should not have direct contact with the precast box sections. Sliding operations should avoid quick, sharp, sudden movements. Typically, boxes should be pulled rather than pushed. Pulling devices may consist of high tension chains or

cables attached to a rigid cross beam spanning the width of the culvert. Attachment of the pulling devices to the cross beam should be close to each culvert wall. The cross-beam should typically be placed level at or near the height of the bottom haunches. Contact points between the cross beam and precast box should be made with a deformable material such as timber.

- For multiple lines of boxes, the 4 feet wide strip of engineering fabric beneath the bottom slabs of the two boxes in BSB SS 1082P may be omitted for any boxes resting on the concrete pad. Where the pad is omitted the fabric shall be included.

7.3.4.2.4 Pedestrian culverts

Precast culverts for pedestrian use shall consider the following items in addition to those listed in BDM 7.2.4.11.4.

- Culvert box ties shall not protrude beyond the interior wall surface since that will create a snagging hazard for pedestrians.
- For precast boxes, the 1'x1' corner haunches shall be omitted.
- The floor shall receive a minimum 2-inch thick unreinforced PC overlay after the culverts have been installed in order to provide an even walking surface from one end of the culvert to the other. The floor of the precast barrel shall be sand-blasted to facilitate bond between the floor concrete and PC overlay.
- Flared CIP end sections shall be used.
- Attach galvanized light fixture boxes and rigid steel conduit, if needed, to the culvert ceiling.
- Ensure interior culvert height provides intended clearance with consideration of overlay and light fixtures (BDM 3.5).

7.3.4.3 Granular leveling material

The excavation and granular blanket guidance in Sections 7.2.4.4.1 and 7.2.4.4.2 also applies to precast RCB culverts. In addition, all precast RCB culverts shall include a 6-inch thick layer of granular leveling material directly below the precast units. This allows the Contractor to establish the line and grade of the culvert prior to setting the precast units. The granular leveling material shall be considered incidental to culvert bid items. Refer to IDOT SS 4117 for material requirements. Special Backfill shall not be used for this material.

When the Soils Design Unit determines that a granular blanket or core-out is needed, the blanket or core-out shall be installed below the granular leveling material with engineering fabric separating the materials. A typical detail showing a precast RCB installation is provided in the commentary of this section.

7.4 Concrete pipe

In general, concrete pipe design and detailing is based on the Design Bureau's Standard Road Plans (DR series) and Road Design Details (1000 series). Only in unusual cases are pipe culverts custom designed.

7.4.1 Loads

Reserved.

7.4.2 Load application

Reserved.

7.4.3 Analysis and design

Reserved.

7.4.4 Detailing

7.4.4.1 Standard plans

See the Design Bureau's Standard Road Plans (DR series) and Road Design Details (1000 series).

7.4.4.2 Software

Reserved.

7.4.4.3 Plan preparation

Reserved.

7.4.4.4 General

Reserved.

7.4.4.5 Pipes

Reserved.

7.4.4.6 Headwalls

Reserved.

7.4.4.7 Inlets

Reserved.

7.4.4.8 Outlets

7.4.4.8.1 Flumes

For a site with considerable elevation difference the preliminary designer may add a flume at a pipe culvert outlet. In general the flume will be similar to a flume for a reinforced concrete box culvert, as indicated in the details in Figure 7.4.4.8.1.

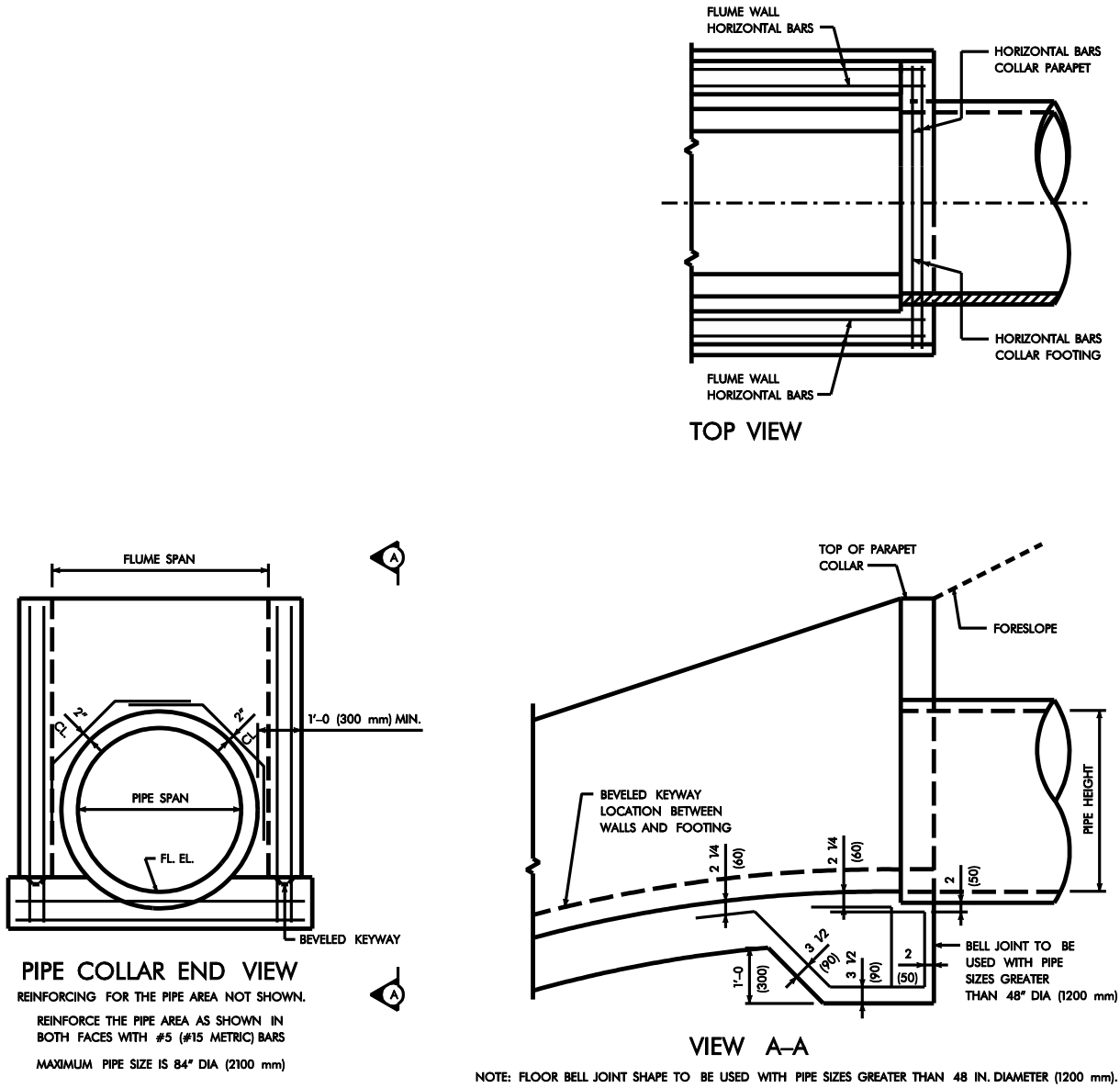

Figure 7.4.4.8.1. Flume details for standard reinforced concrete pipe

So that there is adequate wall thickness around the pipe for the cast-in-place, one-foot thick collar, the designer shall size the flume using Table 7.4.4.8.1.

Table 7.4.4.8.1. Flume size and height for standard reinforced concrete pipe

Reinforced Concrete Pipe Size (inches)	Flume Size (feet x feet)	Height from flowline to top of parapet (ft-in)
24	3 x 3	5’-4
30	4 x 4	6’-4
36	5 x 3	5’-4
42	5 x 4	6’-4
48	6 x 4	6’-4
54	6 x 5	7’-4
60	8 x 5	7’-4
66	8 x 6	8’-4
72	8 x 6	8’-4
84	10 x 8	10’-4

For skewed pipe culvert alignments 30° and greater with an embankment slope of 3:1, the slope of the top of the flume wall should be set at 4:1 to accommodate the skew.

7.4.4.9 Extensions

Reserved.

7.4.4.10 Miscellaneous

Reserved.

7.4.4.10.1 Pipe hand railings

For safety, where pedestrians or bicyclists are likely to be near pipe culvert inlets or outlets, the preliminary designer will require pipe hand railings at culvert parapets and drop inlets. The pipe hand railings should be detailed with the following considerations:

- Ease of handling and transporting and
- Size of galvanizing tanks [BDM 7.2.4.7.2].

General pipe hand railing details are shown in Figures 7.2.4.11.3-1 to 7.2.4.11.3-3. All posts are to be set vertical. In rural areas the designer should use the horizontal rail spacings shown in Figure 7.4.4.10.1-1 and embed posts one foot into concrete walls. In urban areas the designer should use the horizontal rail spacing shown in Figure 7.4.4.10.1-2 and select the base plate detail so that the hand railing can be replaced easily.

The hand railing sections shall be galvanized after fabrication. Drain holes to facilitate the hot dip galvanizing process shall be shown on the railing shop drawings.

The method of measurement for pipe hand railing is the length from end to end of railing [IDOT SS 2414.05, B].

For drop inlets in rural and urban locations, the railings should be detailed to show that the centerline of the top rail to be 3'-6 above the top of the drop inlet walls, which also should be 3'-10 above the flowline of the weir. In rural locations the centerline of the bottom rail is to be 1'-9 below the centerline of the top rail. In urban locations the horizontal rails shall be spaced at 7 inches as shown in Figure 7.4.4.10.1-2.

Parapet hand railings for rural locations are detailed the same as for drop inlets, as shown in Figure 7.4.4.10.1-1. However, parapet hand railings for urban locations need to be taller, 4’-8 as shown in Figure 7.4.4.10.1-2.

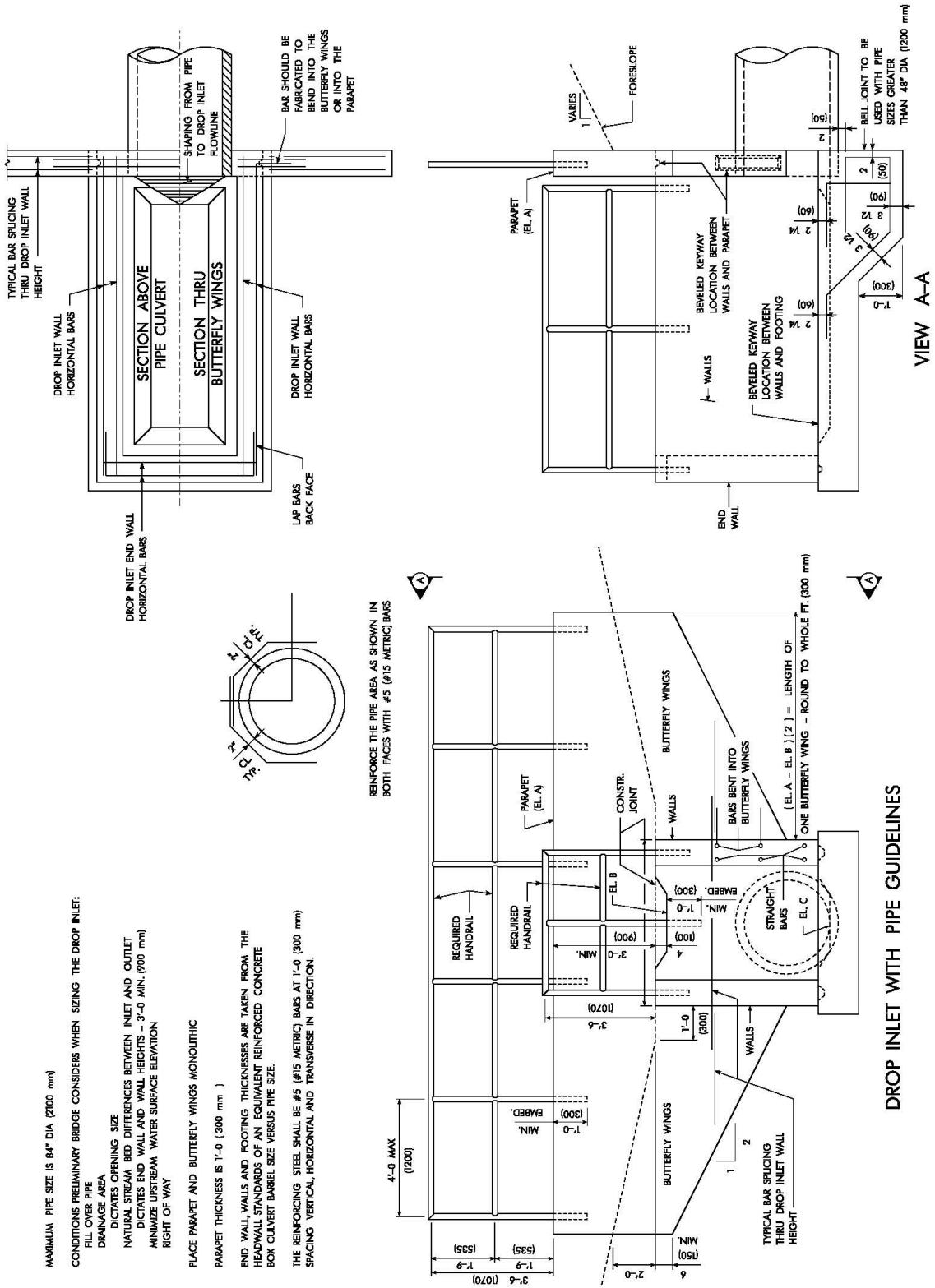

Figure 7.4.4.10.1-1. Rural pipe culvert railings

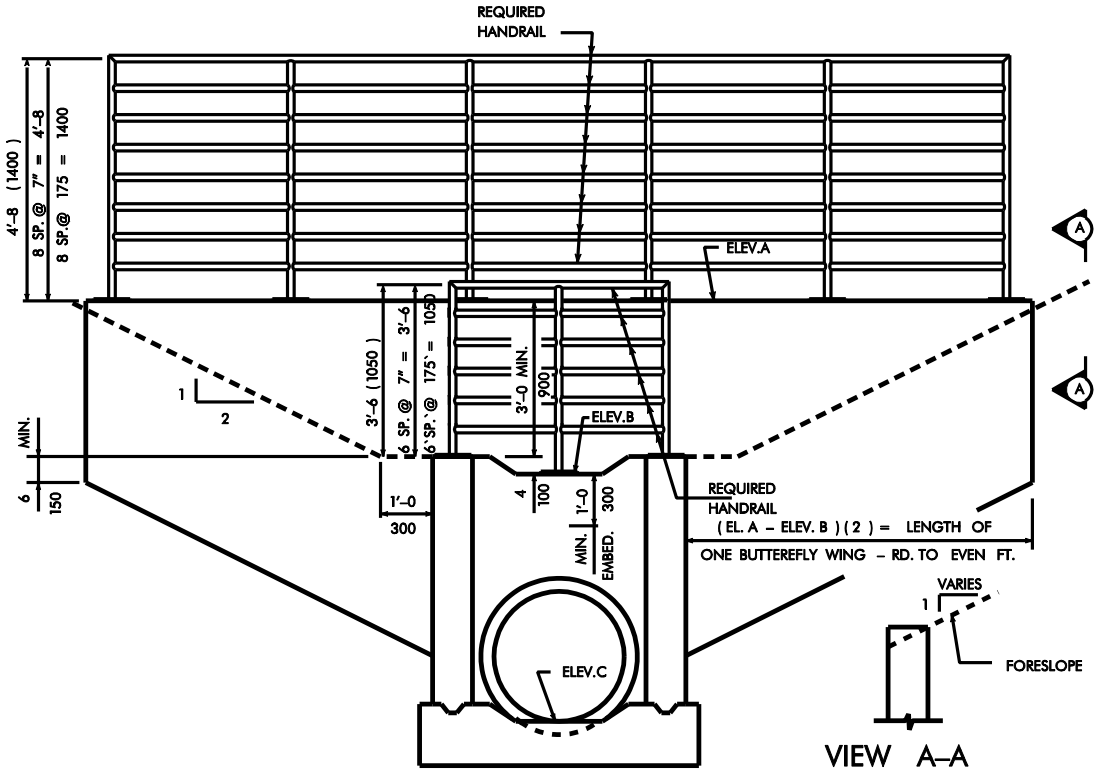

Figure 7.4.4.10.1-2. Urban pipe culvert railings

C7 Culvert Design

C7.2.3.1 Barrels

The 4% limit for wall compression reinforcement is a carryover from the culvert design program used in the Bureau prior to the transition to LRFD.

C7.2.4.4.2 Granular blankets and working blankets

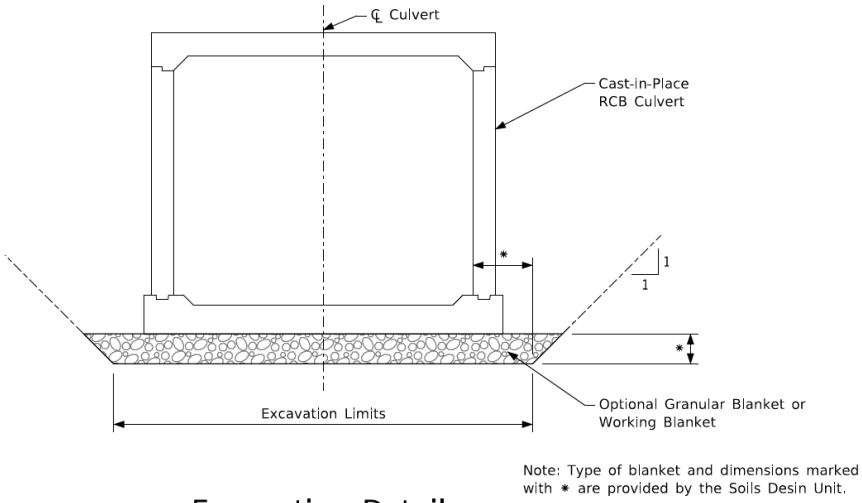

Excavation Detail
(Cast-in-Place RCB Culvert)

C7.3.4.3 Granular leveling material

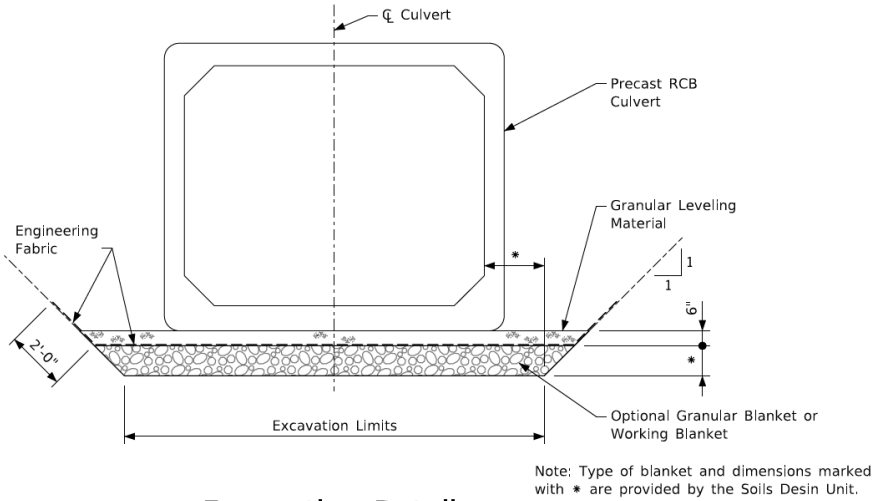

Excavation Detail
(Precast RCB Culvert)

Precast Box Culvert Standards

Barrel and End Section Design Methodology

March 11, 2021

Developed For:

Developed By:

Foth Infrastructure & Environment, LLC

Table of Contents

1 Definitions 4
2 Abbreviations 4
3 Background 4
4 Material Properties and Constants 5
5 Box Culvert Geometry 5
5.1 Box Sizes 5
5.2 Fill Height 5
5.3 Member Thicknesses 5
5.4 Haunch 6
5.5 Skew 6
6 Loads for Barrel Design 6
6.1 Load Factor and Load Modifier Summary 6
6.2 Dead Load – Self-Weight (DC) 7
6.3 Dead Load – Additional Dead Loads (DW) 7
6.4 Vertical Earth Pressure (EV) 7
6.5 Horizontal Earth Pressure (EH_{Min} and EH_{Max}) 7
6.6 Water Pressure (WA) 7
6.7 Live Load Surcharge (LS) 7
6.8 Live Load (LL+IM) 7
6.9 Load Cases and Combinations 8
7 Structural Analysis of Barrels 9
8 Barrel Design 10
8.1 Resistance Factors 10
8.2 Reinforcing Layout 10
8.3 Critical Sections 11
8.4 Reinforcing Wire Diameter and Maximum Spacing 12
8.5 Strength-Level Flexural Reinforcing Requirements 12
8.6 Crack Control Requirement 13
8.7 Minimum Reinforcing Requirements 13
8.8 Maximum Reinforcing Requirements 13
8.9 Shear Capacity 13
8.10 Development of Welded Wire Reinforcing 14
9 Adjustments to Eriksson Culvert Default Settings for Barrel Design 14

10 Loads for End Section Design 14
10.1 Load Factors and Load Modifiers 14
10.2 Dead Load – Self-Weight (DC) 15
10.3 Dead Load – Additional Dead Loads (DW) 15
10.4 Vertical Earth Pressure (EV) 15
10.5 Horizontal Earth Pressure (EH_{Min} and EH_{Max}) 15
10.6 Water Pressure (WA) 15
10.7 Live Load Surcharge (LS) 15
10.8 Live load (LL+IM) 15
10.9 Load Combinations 15
10.10 Comparison to CIP Headwall Standards 17
11 Structural Analysis of End Sections 17
11.1 Design Model for AH Steel In Walls 18
11.2 Design Model for AH Steel in Floor 18
11.3 Design Model for As3 Steel in Floor 18
11.4 Design Model Steel on Inside Face of Wall 18
11.5 Design Model for Ab Steel in the Slab of Type 1 End Sections 18
11.6 Design Model for A_t Steel in the Slab of Type 1 End Sections 18
11.7 Parapet and Lintel Beam Design Model 19
12 End Section Design 19
12.1 Resistance Factors 19
12.2 Type 3 Reinforcing Layout 19
12.3 Type 1 Reinforcing Layout 20
12.4 Critical Sections 21
12.5 Reinforcing Wire Diameter and Maximum Spacing 21
12.6 Strength-Level Flexural Reinforcing Requirements 21
12.7 Crack Control Requirement 21
12.8 Minimum Reinforcing Requirements 21
12.9 Maximum Reinforcing Requirements 21
12.10 Shear Capacity 21

1 Definitions

Slab – The top horizontal member of the culvert

Floor – The bottom horizontal member of the culvert

2 Abbreviations

AASHTO – American Association of State Highway and Transportation Officials

ASTM – American Society for Testing and Materials

CIP – Cast In Place

Iowa DOT – Iowa Department of Transportation

LRFD – Load and Resistance Factor Design

MnDOT – Minnesota Department of Transportation

MCFT – Modified Compression Field Theory

RCB – Reinforced Concrete Box

3 Background

Before the development and release of the precast box culvert standards in 2012, the Iowa DOT allowed precast concrete box culverts as an alternate bid to CIP RCB culverts in certain limited situations, namely, for standard size single box culverts with standard size parallel wing headwalls at both ends and fill heights ranging from 2 ft. to less than 20 ft. Use of precast culverts was further limited to situations when settlement was expected to be less than 6 in. The use of precast culverts outside of the established departmental limits was approved on a case-by-case basis. Substitution of a precast box culvert was not allowed in situations where bell joints were required or installations where culverts are founded directly on bedrock.

In May 2012, the Iowa DOT initiated the development of precast box culvert standards in accordance with the AASHTO LRFD Bridge Design Specifications, 5th Edition, with Interims through 2010 (AASHTO LRFD). These standards, released in January 2013, were limited to single cell barrels and closely followed the format of the MnDOT precast box culvert standards. The standards were developed using BOXCAR, a commercial software application developed specifically for the design of precast box culvert barrels and marketed through the American Concrete Pipe Association.

In July 2020, the Iowa DOT released updated precast box culvert standards in accordance with the AASHTO LRFD Bridge Design Specifications, 8th Edition. The barrel sections were developed with Eriksson Culvert software. End sections were completed using custom MathCAD worksheets and were designed to be compatible with both the Iowa DOT standard barrels and barrels conforming to ASTM C1577-20. The new standards include all single barrel sizes from the 2013 standards, as well as previously unpublished 14’ and 16’ span sections.

This document details the design process used for the development of the 2020 precast box culvert standards. Differences in design methodology relevant to the MnDOT standards and the Iowa DOT CIP

standards are also noted in this document. Design exceptions to AASHTO LRFD and ASTM C1577-20 Standard Specification for Precast Reinforced Concrete Monolithic Box Section for Culverts, Storm Drains, and Sewers Designed According to AASHTO LRFD will also be noted.

4 Material Properties and Constants

Material properties and related constants are presented in Table 4-1.

Table 4-1 Material Properties

Concrete	f'_c = 5 ksi (see Note 1)
Welded Wire Fabric	f_y = 65 ksi
Reinforcing Steel	f_y = 60 ksi
Reinforced Concrete Density	0.150 kcf
Soil Fill Density	0.120 kcf
Soil Fill Friction Angle (ϕ)	30°
Water Density	0.0624 kcf
Typical Clear Cover	2 in.

Note 1:
Concrete strength may be increased to 6 ksi when needed to keep member thicknesses to 12 in. or less and to eliminate shear reinforcing.

5 Box Culvert Geometry

5.1 Box Sizes

The list of precast single box sizes (span x height) provided below correspond with the box sizes developed for the CIP single box culvert standards, with spans less than 6 ft. being excluded.

6x3, 6x4, 6x5, 6x6, 6x7, 6x8
8x4, 8x5, 8x6, 8x7, 8x8, 8x9, 8x10
10x4, 10x5, 10x6, 10x7, 10x8, 10x9, 10x10, 10x11, 10x12
12x4, 12x5, 12x6, 12x7, 12x8, 12x9, 12x10, 12x11, 12x12
14x4, 14x5, 14x6, 14x7, 14x8, 14x9, 14x10, 14x11, 14x12, 14x13, 14x14
16x4, 16x5, 16x6, 16x7, 16x8, 16x9, 16x10, 16x11, 16x12, 16x13, 16x14

5.2 Fill Height

Standard designs for 12’ and lesser spans are provided for fill heights between 2 ft. and 25 ft., while standard designs for 14’ and 16’ spans are provided for fill heights between 2 ft. and 16 ft. These fill heights generally follow the MnDOT precast box culvert standards except the MnDOT standards provided designs for less than 2 ft. of fill and also limit the fill height for the 12 ft. spans to 22 ft.

5.3 Member Thicknesses

The minimum floor, slab, and wall thickness for culverts with 6 ft. spans is 8.0 in. For culverts of all other spans, the minimum thicknesses are 8.0 in. for walls, 9.0 in. for the slab, and 10.0 in. for the floor.

The maximum desirable thickness for any member of any culvert size is 12.0 in. If this requirement cannot be met when assuming a concrete compressive strength of f'_c = 5 ksi without the addition of shear reinforcing, a concrete compressive strength of f'_c = 6 ksi may be used.

5.4 Haunch

A haunch with dimensions of 12 in. in both the horizontal and vertical direction is used for all box sizes. This practice is consistent with the MnDOT precast box culvert standards.

5.5 Skew

The standard precast designs assume traffic is travelling parallel to the span. This assumption is considered to provide adequate designs for culverts skewed to a maximum of 45 degrees. The standard precast designs may need to be redesigned if skew angles exceed 45 degrees. Article X1.2 of ASTM C1577-20 states a separate analysis is required when the skew angle exceeds 30 degrees and the fill depth is 5 ft. or less.

6 Loads for Barrel Design

6.1 Load Factor and Load Modifier Summary

The load factors in Table 6-1 were selected from the AASHTO LRFD Tables 3.4.1-1 and 3.4.1-2. Refer to Section 8.5 for an explanation of the differing moment and shear and thrust load factors for the Strength I load combinations. According to AASHTO LRFD Art. 12.5.4, buried structures are considered non-redundant for earth fills at the strength limit state and therefore a load modifier value of η= 1.05 is applied to the Earth Horizontal and Earth Vertical loads. A load modifier value of η= 1.0 is used for all other loads. These load modifiers are consistent with AASHTO LRFD Art. 1.3.3 through 1.3.5. Load modifiers are used by Eriksson Culvert to increase the earth loads when they contribute to the maximum force effect and the reciprocal of the load modifier is used to decrease the earth loads when they do not contribute to the maximum force effect. Load modifiers were used to only increase the earth loads in the CIP box culvert designs.

Table 6-1 Load Factors (γ)

		Load Combination		
		Strength I		Service I
Load		**Moment and Shear**	**Thrust**	**All Forces**
DC	Max.	1.25	0.00	1.00
	Min.	0.90	0.00	
EV	Max.	1.30	0.00	1.00
	Min.	0.90	0.00	
EH	Max.	1.35	0.00	1.00
	Min.	0.90	0.00	
LL+IM	---	1.75	0.00	1.00
LS	---	1.75	0.00	1.00
WA	---	1.00	0.00	1.00

6.2 Dead Load – Self-Weight (DC)

This load accounts for the self-weight of the concrete box culvert based on a unit weight of 0.150 kcf. This load includes the slab, walls, and haunches. The self-weight of the floor is assumed to be directly resisted by the soil and therefore is not included.

Eriksson Culvert applies the weight of the haunches as a distributed load across the slab and the weight of the walls is applied to the walls as a distributed vertical load. CIP box culvert designs use a similar approach.

6.3 Dead Load – Additional Dead Loads (DW)

No DW loads are included in the culvert design since Ericksson Culvert does not account for the pavement weight separately from the earth fill over the culvert. The fill depth measurement used by Eriksson Culvert includes the pavement thickness so only the difference in pavement and soil densities over the pavement thickness is actually neglected by Ericksson Culvert. In the CIP box culvert designs, the pavement was treated as a surcharge load and the fill depth used in the calculations was measured from the underside of the pavement.

6.4 Vertical Earth Pressure (EV)

This load accounts for the fill weight and is based on fill depth, measured from the top of the roadway to the top of the culvert, and the soil unit weight. A soil-interaction factor is applied based on the provisions of AASHTO LRFD Art. 12.11.2.2 assuming an embankment installation condition. The "Compacted Fill" option in Ericksson Culvert is utilized for the standard precast designs.

6.5 Horizontal Earth Pressure (EH_{Min} and EH_{Max})

This load accounts for the maximum and minimum horizontal earth pressure as described in AASHTO LRFD Art. 3.11.5.1 and Art. 3.11.7. The earth pressure assumes an at-rest condition and is calculated using an assumed angle of internal friction of 30 degrees. Minimum horizontal earth pressure is 50% of the overall earth pressure and is included in all load cases. The maximum earth pressure is the remaining 50% of the overall earth pressure and is added to the minimum earth pressure for load cases maximizing inward horizontal loads.

6.6 Water Pressure (WA)

This load accounts for water pressure pushing outward on the walls due to water inside the culvert. Water pressure is applied in load combinations minimizing horizontal inward forces.

6.7 Live Load Surcharge (LS)

The live load surcharge results in an inward horizontal pressure applied to the walls of the box culvert that is calculated according to AASHTO LRFD Art. 3.11.6.4. An equivalent fill height is calculated by interpolation from AASHTO LRFD Table 3.11.6.4-1. The "abutment height" used to determine the wall pressure is taken as the fill depth plus the overall height of the box culvert. The pressure exerted on the walls is calculated using AASHTO LRFD Eq. 3.11.6.4-1. The pressure is applied uniformly over the full height of the walls.

6.8 Live Load (LL+IM)

Vertical live load consists of the HL-93 design truck and design tandem as defined in AASHTO LRFD Art. 3.6.1.2. Eriksson Culvert utilizes a one-lane loaded condition and applies a 1.2 multiple presence

factor as directed by AASHTO LRFD Table 3.6.1.1.2-1. It can be shown that the one lane condition governs or provides nearly the same soil pressures as multiple lane conditions for span lengths typical to single cell box culverts. The CIP box culvert designs utilized one-, two-, and three-lane loaded conditions with applicable multiple presence factors and also were checked to ensure the SU8 rating truck did not control the design.

For fill heights 2.0 ft. or greater, wheel loads are uniformly distributed over a rectangular area in accordance with AASHTO LRFD Art. 3.6.1.2.6. The length and width dimensions of the rectangular area are the tire patch dimensions increased by the product of the fill depth and live load distribution factor (LLDF). Where such areas overlap, the total load is uniformly distributed over the entire area. As specified in AASHTO LRFD Art. 3.6.1.2.5, the tire patch length (parallel to the span) is assumed to be 10 in. and the width is assumed to be 20 in. By default, Eriksson Culvert uses 1.15 for the LLDF (referred to in the program as the Slope Factor). The standard precast designs are based on a LLDF of 1.00 per direction from the Iowa DOT. The CIP box culvert designs, MnDOT standards and ASTM C1577-20 use a LLDF of 1.15.

Eriksson Culvert neglects live loads when the fill depth is greater than 8 ft and when fill depth exceeds the length of the span, in accordance with AASHTO LRFD Art. 3.6.1.2.6. The CIP box culvert designs similarly neglected live load as allowed by AASHTO LRFD.

For fill heights less than 2.0 ft., the axle load is typically distributed perpendicular to the span as a line load. This condition is not applicable to the standard precast designs since the minimum fill height was 2.0 ft.

Both the design truck and design tandem are stepped across the box culvert by Eriksson Culvert in each direction at a user-defined interval. By default, this interval is 20 increments per cell. A similar approach was utilized for the CIP box culvert designs where the design truck and design tandem were stepped across the culvert at equal intervals not exceeding 1.0 ft., starting with the front axle over the left wall and ending with the rear axle over the right wall. This approach provides a live load envelope similar to the approach utilized by Eriksson Culvert.

Dynamic load allowance (IM) was calculated and applied based on the provisions of AASHTO LRFD Art. 3.6.2.2 for both the precast and CIP designs.

The soil pressure developed on the floor due to live load is modeled as a uniform distributed load by Eriksson Culvert. The load varies depending on the number of axles on the culvert. The number of axles on the culvert are computed for both forward and backward truck orientations to show the possible combinations of axles.

6.9 Load Cases and Combinations

The following three (3) load cases are utilized for the standard precast designs for both the AASHTO LFRD Strength I and Service I load combinations.

- *Case A – Maximize Vertical Forces/ Maximize Inward Horizontal Forces*
  Maximize vertical and horizontal forces acting inward by applying maximum load factors and modifiers to DC, DW, EV, and EH . Include all loads except WA.

- *Case B – Maximize Vertical Forces / Maximize Outward Horizontal Forces*
  Maximize vertical forces by applying maximum load factors and modifiers to DC and EV and including LL+IM. Maximize horizontal forces acting outward by applying minimum load factors and modifiers to EH_{Min}, including WA, and neglect LS.

- *Case C – Minimize Vertical Forces / Maximize Inward Horizontal Forces*
  Minimize vertical forces by applying minimum load factors and modifiers to DC, EV and neglecting LL+IM. Maximize horizontal forces acting inward by applying maximum load factors to EH, including LS and neglecting WA.

Using the load factor and modifier values presented in Table 6-1, the general equations of each load case are as follows:

- Strength I - Case A

  $$Q = 1.25 \cdot DC + 1.365 \cdot EV + 1.418 \cdot EH_{Max} + 1.75 \cdot (LL + IM) + 1.75 \cdot LS$$

- Strength I - Case B

  $$Q = 1.25 \cdot DC + 1.365 \cdot EV + 0.857 \cdot EH_{Min} + 1.75 \cdot (LL + IM) + 1.00 \cdot WA$$

- Strength I - Case C

  $$Q = 0.90 \cdot DC + 0.857 \cdot EV + 1.418 \cdot EH_{Max} + 1.75 \cdot LS$$

- Service I - Case A

  $$Q = 1.0 \cdot DC + 1.0 \cdot EV + 1.0 \cdot EH_{Max} + 1.0 \cdot (LL + IM) + 1.0 \cdot LS$$

- Service I - Case B

  $$Q = 1.0 \cdot DC + 1.0 \cdot EV + 1.0 \cdot EH_{Min} + 1.0 \cdot (LL + IM) + 1.0 \cdot WA$$

- Service I - Case C

  $$Q = 1.0 \cdot DC + 1.0 \cdot EV + 1.0 \cdot EH_{Max} + 1.0 \cdot LS$$

Note the Strength I equations are relevant for only the moment and shear forces. Thrust at the strength-level was neglected for the standard precast designs.

7 Structural Analysis of Barrels

A 1.0 ft. wide strip of the culvert is modeled as a plane frame model with beam elements representing the slab, floor, and walls. Elements are taken along the centerline of each member and cross-sectional properties are derived from the member thickness and 12 in. The model is supported at one of the

lower corners by a pinned support, restricting movement in the x- and y-directions, and a roller support in the opposite lower corner, restricting the movement in the y-direction only.

Eriksson Culvert accounts for the increased stiffness of the haunches in the internal structural model. The haunch stiffening effect was ignored in the development of the CIP box culvert designs.

Eriksson Culvert considers moments that produce tension on the inside face of the walls, slab, and floor as positive moments and compressive axial forces are considered as positive thrusts. This sign convention will be used in this document when discussing moments and thrusts.

The haunch has a corner stiffening effect that is accounted for in the structural model used by Eriksson Culvert. This stiffening effect results in higher moments in the box corners and lower moments at midspan of the members when compared to a model where the stiffening effect is neglected. The relative change in moment magnitude is reduced as the span and height of the barrel is increased. The stiffening effect was neglected for the CIP standard box culvert designs.

8 Barrel Design

8.1 Resistance Factors

Resistance factors for precast box culverts are specified in AASHTO Table 12.5.5-1 and equal 1.0 for flexure and 0.9 for shear. These values are slightly higher than the values presented in the same table for CIP box culverts and used in the development of the CIP box culvert designs (0.9 for flexure and 0.85 for shear).

8.2 Reinforcing Layout

Precast box culverts are generally reinforced with welded wire fabric composed of varying wire sizes and spacings. Eriksson Culvert provides the required area of reinforcing on a per foot basis at various locations in the culvert. The naming convention used by Eriksson Culvert to label the reinforcing at various locations, followed by the equivalent naming convention used by ASTM C1577-20 in parentheses are described as follows:

- A1/A2/B2 (As1) – The area of steel As1 is located in the outside face of the walls and continues into the outside face of the slab and floor. This reinforcing resists negative moments in the walls, slab, and floor and terminates in the slab and floor when it is no longer required for flexural strength.

- A100 (As2) – The area of steel As2 is located on the inside face of the slab and resists positive moments in the slab.

- A200 (As3) – The area of steel As3 is located on the inside face of the floor and resists positive moments in the floor.

- B1 (As4) – The area of steel As4 is located on the inside face of the walls and resists positive moments in the walls.

- C100 (As5) and C1 (As6) – These areas of steel As5 and As6 are the longitudinal reinforcing located in the outside and inside faces respectively. For fill heights 2 ft. or greater, these areas need to only satisfy minimum reinforcing requirements.

- A300 (As7) – The area of steel As7 is located near the center of the outside face of the slab and laps with the As1 steel. Since negative moments quickly dissipate inward from the corners, the As7 steel is typically controlled by minimum reinforcing requirements.

- A400 (As8) – The area of steel As8 is located near the center of the outside face of the floor and laps with the As1 steel. Since negative moments quickly dissipate inward from the corners, the As8 steel is typically controlled by minimum reinforcing requirements.

The precast box culvert standards also require reinforcing to be placed in the haunches. The nominal haunch reinforcing consists of #3 transverse bars spaced at 12 in. on center. A diagram showing the locations of the various reinforcing designations as well as the variable dimension designations used in the precast box culvert standards is presented in Figure 8-1. This manual will use the ASTM naming convention when referencing the reinforcing steel locations.

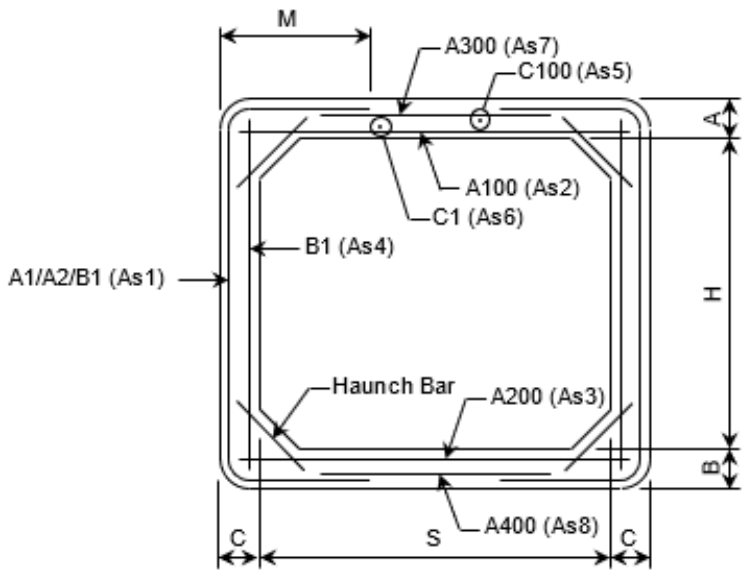

Figure 8-1 Typical Barrel Cross Section

8.3 Critical Sections

Eriksson Culvert determines the required reinforcing area and checks shear capacity at a number of critical sections. The required areas of reinforcing are typically controlled by a few significant critical sections. For the As1 reinforcing, the controlling critical sections are located at the toe of the haunch in the slabs, floor, and walls. For the remaining areas of reinforcing, the controlling critical sections are typically at or near the midspan of each member. Controlling critical sections for shear capacity are located at a distance d_v from the toe of the haunches in accordance with AASHTO LRFD Art. 5.7.3.2.

8.4 Reinforcing Wire Diameter and Maximum Spacing

Similar to the 2013 standards, the 2020 precast box culvert standards allow a range of 2 in. to 4 in. for transverse wire spacing. In Design Mode, Eriksson Culvert automatically fills the reinforcing schedule to meet design requirements. In this mode, wire spacing cannot be specified. Required reinforcing steel area will often be higher at a wider spacing due to crack control requirements. Therefore, results need to be checked in Analysis Mode with wire spacing set to 4 in. if Design Mode results show a required reinforcing steel area at a spacing less than 4 in. The process for development of the 2020 standards is as follows:

1. Run Eriksson Culvert in Design Mode.
2. Switch to Analysis Mode.
3. In the Reinforcement input screen, set wire spacing to 4 in. for any bars using a spacing of less than 4 in.
4. Incrementally increase the wire diameter as required to get a passing design.

In Design Mode, reinforcing wire diameter is unknown when determining member thicknesses, therefore, the Reinforcing Diameter is used to approximate the thickness of one layer of reinforcing. The Reinforcing Diameter is input in the Culvert Properties / Material Properties tab, where the default value is 1 in. Eriksson Culvert uses the actual diameter of the assigned or calculated reinforcing to determine design capacity at critical sections.

8.5 Strength-Level Flexural Reinforcing Requirements

The area of reinforcing required to satisfy the strength limit state is determined by Eriksson Culvert using AASHTO LRFD Eq. 12.10.4.2.4a-1 from the section pertaining to reinforced concrete pipe culverts. This equation is a function of both the factored moment and factored thrust and directly provides the required area of reinforcing needed to resist both moment and thrust.

Eriksson Culvert allows the user to assign strength-level load factors specific to the thrust forces. By default, Eriksson Culvert uses a load factor of 1.0 for the thrust forces. In AASHTO LRFD Eq. 12.10.4.2.4a-1, an increase in the thrust force results in a decrease in required reinforcing area. By using a lower load factor on the thrust force, the contribution of the thrust effect on the section capacity is reduced. The MnDOT standards conservatively ignored the thrust load at strength-level by assigning a value of 0 to the strength-level thrust load factors. The Iowa DOT has adopted this practice for the development of their standard precast designs.

When the thrust force terms are removed from AASHTO LRFD Eq. 12.10.4.2.4a-1, this equation can be algebraically reconfigured to match the conventional reinforced concrete beam equations presented in AASHTO LRFD Art. 5.6.3. Therefore, the design methodology for the slab and floor is consistent with the design of these elements in the CIP box culvert standards. The design of the walls differs though in that the CIP box culvert standard walls were designed as eccentrically loaded columns whereas the precast box culvert standard walls are designed as beams with no axial load.

8.6 Crack Control Requirement

Eriksson Culvert determines the reinforcing area required to satisfy the crack control provisions presented in AASHTO LRFD Art. 5.6.7. Eriksson Culvert accounts for both service-level moment and thrust and calculates the reinforcing stress by iterative solving of an equilibrium equation. While AASHTO LRFD Art. 5.6.7 limits the maximum reinforcing stress to 60% of yield stress, no limit on service load stress was imposed on the CIP or precast box culvert designs. Future redevelopment of these standards should consider implementing the 60% limit if so required by the current version of the LRFD Specifications.

By default, Eriksson Culvert uses a Class 1 exposure factor, which correlates with a moderate exposure condition. A Class 2 exposure factor was used in the MnDOT standards, correlating to a severe exposure condition. Similarly, the Iowa DOT precast box culvert standards also use a Class 2 exposure factor. The CIP box culvert standards use a Class 1 exposure factor except for slabs in 0 ft. fill situations. The exposure class used in the ASTM C1577-20 is not explicitly stated in the standards, but is assumed to be Class 1.

8.7 Minimum Reinforcing Requirements

Eriksson Culvert provides a minimum longitudinal reinforcing area of 0.2% of the gross concrete area, as required by AASHTO LRFD Art. 12.11.5.3.2. MnDOT standards, following AASHTO LRFD Art. 5.10.6, set the minimum longitudinal reinforcing at 0.06 in^2/ft for each face based on an assumed 12 in. for member thickness and width. Specified minimum longitudinal reinforcing for the Iowa DOT precast box standards for spans 12 ft. or less is consistent with the MnDOT standards. For the 14 ft. and 16 ft. spans, the minimum longitudinal reinforcing was increased to 0.11 in based on Art. 5.10.6 using a member width of 72 in. and a member thickness of 12 in. The CIP box culvert standards refer to AASHTO LRFD Art. 12.11.5.3.1 when calculating minimum reinforcing requirements.

8.8 Maximum Reinforcing Requirements

The previous version of the precast standards limited maximum reinforcing area according to AASHTO LRFD Eq. 12.10.4.2.4c-2. Although this equation relates to reinforced concrete pipe, it can be shown through algebraic manipulation that this equation limits the reinforcing area to 75% of the balanced steel ratio (ρ_b), which is the limit used in the MnDOT standards.

Eriksson Culvert does not impose a specific maximum limit on reinforcing. The current precast standards developed with Eriksson Culvert implemented the “sliding” ϕ-factor per AASHTO LRFD Art. C5.5.4.2.1 to lower the ϕ-factor when a section is heavily reinforced.

Reinforcing area for the standard CIP designs developed with CulvertCalc was further limited by the Iowa DOT to ensure the section would remain “tension controlled”, as described in AASHTO LRFD Art. 5.5.4.2. It can be shown that limiting the reinforcing area to 63.4% of ρ_b satisfies the minimum strain limit of 0.005 per AASHTO LRFD Art. C5.5.4.2.1 and Art. 5.7.2.1.

8.9 Shear Capacity

Shear capacity for the slab and floor differs depending on whether the fill depth is greater than or less than 2 ft. Since the minimum fill depth provided in the standard precast designs is 2 ft.,

the shear capacity of the slab, walls, and floor were calculated using AASHTO LRFD Eq.5.12.7.3-1.

The standard precast designs limit the maximum member thickness to 12 in. and do not include shear reinforcing. Thus, the member thicknesses were increased from the minimum thicknesses when the concrete shear capacity was inadequate. If the 12 in. member thickness limit was reached, the concrete strength was increased to 6 ksi.

8.10 Development of Welded Wire Reinforcing

Eriksson Culvert uses the equivalent capacity method to calculate the necessary embedment of the As1 reinforcement into the slab and floor, henceforth referred to as the “M” dimension. This length is determined by the location where the As1 reinforcing is no longer required and moment in the slab and floor can be resisted by the As7 and As8 reinforcing, respectively. The greater of the distances in the slab and floor is then added to the development length of the As7 and As8 reinforcing to obtain the “M” dimension, which will be applied to the reinforcement in both members.

9 Adjustments to Eriksson Culvert Default Settings for Barrel Design

The standard precast designs are based on the following adjustments to the default settings:

- In Reinforcement:
  - If using welded wire fabric, select Mesh as Reinforcement Type
- In Culvert Properties / Physical Dimensions:
  - Set Haunch Dimensions to 12 in.
  - Set Reinforcement Cover values to 2 in.
- In Culvert Properties / Material Properties:
  - If using welded wire fabric, set reinforcing steel yield strength to 65 ksi
  - Set Exposure Factor to Class 2
  - Set Slope Factor to User-Defined with a value of 1.00
- In Static Loads:
  - Select Consider Interior Water Pressure
- In Analysis Options:
  - Set Flexure Critical Section Location to End of Haunch
  - Select Model Haunches in the Slabs and Model Haunches in the Walls

10 Loads for End Section Design

Loads placed on the end sections are generally consistent with the barrel design loads presented in Chapter 6, and will be further discussed in the following sections.

10.1 Load Factors and Load Modifiers

The load factors and load modifiers for the end section wall and floor design adhere to the barrel design load factors and modifiers presented in Section 6.1. Live load placement on the parapet is considered an extreme event by the Iowa DOT and utilizes a live load factor of 1.0. The DC load factor for the parapet design is 1.25, per AASHTO LRFD Table 3.4.1-2.

10.2 Dead Load – Self-Weight (DC)

The self-weight of the parapet is accounted for in the design of the parapet. Soil pressure acting on the floor due to self-weight of the walls and haunch is included in the floor design. The crack-control check in the walls accounts for the self-weight of the walls. For dead load calculations, the haunch is assumed to be 12 inches tall and 12 inches wide.

10.3 Dead Load – Additional Dead Loads (DW)

No additional dead loads are applied to the end sections.

10.4 Vertical Earth Pressure (EV)

Vertical earth pressure acting on the lintel beam is accounted for in the Type 1 slab design and Type 3 lintel beam design. Vertical earth pressure does not influence the end section wall or floor design.

10.5 Horizontal Earth Pressure (EH_{Min} and EH_{Max})

Horizontal earth pressure acting on the end section walls is identical to the horizontal earth pressure placed on the barrels and is described in Section 6.5.

10.6 Water Pressure (WA)

Water pressure acting on the end section walls and floor is accounted for in a manner identical to the barrel design as presented in Section 6.6.

10.7 Live Load Surcharge (LS)

The end sections are assumed to be beyond the live load surcharge zone of influence and thus no live load surcharge is applied to the end sections.

10.8 Live load (LL+IM)

Live load is placed on the culvert end sections to account for an extreme event condition. Based on Iowa DOT guidelines, the live load consists of a single 16 kip wheel load and a multiple presence factor of 1.2. Dynamic load allowance is taken as 0.33. The wheel load is placed at midspan for design of the flexural reinforcing and at a distance d_v from the inside face of the wall for verification of shear capacity.

10.9 Load Combinations

Load combinations are specific to each element of the end section and are configured to create a maximum force effect in that element. These combinations are defined below.

- *Case A - Design of AH Steel in Walls*
  The AH reinforcing steel is flexural reinforcing in the outside face of the walls. To maximize the moments inducing tension in this steel, horizontal earth pressure on the walls is maximized by applying EH_{Max} and the WA load is neglected. The DC loads are also applied. This load combination is also used to design the reinforcing steel on the inside face of the walls by assuming the wall acts as a propped cantilever at the barrel connection.

- *Case B - Design of AH Steel in Floor*
  The AH reinforcing steel is also the flexural reinforcing in the bottom of the floor. To maximize the moments inducing tension in this steel, horizontal earth pressure on the walls is maximized by applying both EH_{Min} and EH_{Max} and the WA load is neglected. The DC loads inducing soil pressure on the floor are minimized.

- *Case C – Design of As3 Steel in Floor*
  The As3 reinforcing steel is the flexural reinforcing in the top of the floor. To maximize the moments inducing tension in this steel, the horizontal earth pressure on the walls is minimized by only applying EH_{Min}, and the WA load is applied. The DC loads inducing soil pressure on the floor are maximized.

- *Case D – Parapet, Lintel, A_t, and A_b Design*
  As previously discussed, LL+IM is applied to the parapet of both end section types, the lintel beam for the Type 3 end section, and the slab for the Type 1 end section in an extreme event condition. The DC and EV loads for the parapet are also included in this load combination.

Using the load factor and modifier values presented in Table 6-1, the general equations of each load case are as follows:

- Strength I - Case A

  $$Q = 1.25 \cdot DC + 1.418 \cdot EH_{Max}$$

- Strength I - Case B

  $$Q = 0.90 \cdot DC + 1.418 \cdot EH_{Max}$$

- Strength I - Case C

  $$Q = 1.25 \cdot DC + 0.857 \cdot EH_{Min} + 1.00 \cdot WA$$

- Strength I - Case D

  $$Q = 1.25 \cdot DC + 1.00 \cdot (LL + IM)$$

- Service I - Case A

  $$Q = 1.0 \cdot DC + 1.0 \cdot EH_{Max}$$

- Service I - Case B

  $$Q = 1.0 \cdot DC + 1.0 \cdot EH_{Max}$$

- Service I - Case C

$$Q = 1.0 \cdot DC + 1.0 \cdot EH_{Min} + 1.0 \cdot WA$$

- Service I - Case D

$$Q = 1.25 \cdot DC + 1.30 \cdot EV + 1.0 \cdot (LL + IM)$$

Note the Strength I equations are relevant for only the moment and shear forces. Thrust at the strength-level was neglected for the standard end section designs.

10.10 Comparison to CIP Headwall Standards

The component loads and load combinations selected for design of the precast end sections are consistent with the precast barrel design methodology but differ from the component loads and load combinations used for the development of CIP parallel wing headwalls (PWHs). In general, the PWHs designs applied hydrostatic pressure on the outside of the headwall assuming a saturated soil condition and neglected hydrostatic pressure acting on the inside of the headwall. The four (9) load combinations used in the design of the PWHs are presented below. Load combinations 1 through 4 are for design near the parapet, where the wall is modeled as a propped cantilever. Load combinations 5 through 8 are for design at the point at which wall height is ¾ of the maximum wall height. Load combination 9 is for design of the walls at the point where alternating vertical bars in the back face of wall are eliminated.

- Load Combinations 1 and 5 assumed minimal dry soil (γ = 0.120 pcf) pressure on the walls and maximum DC loads. This combination was intended to maximize tension in the top of the floor.
- Load Combinations 2 and 6 assumed minimal saturated soil (γ = 0.135 pcf) pressure on the walls, maximum DC loads, and hydrostatic pressure outside the headwall. The effective unit weight of the soil was used and the hydrostatic pressure acted inward on the walls and upward on the floor. This combination was also intended to maximize tension in the top of the floor.
- Load Combinations 3 and 7 assumed maximum saturated soil pressure on the walls and minimum DC loads. Load combination 3 was intended to maximize tension in the front face of wall. Load combination 7 was intended to maximize tension in the bottom of the floor.
- Load Combinations 4, 8 and 9 assumed maximum saturated soil pressure on the walls, maximum DC loads, and hydrostatic pressure outside the headwall. These combinations were intended to maximize tension on the back face of the walls.

11 Structural Analysis of End Sections

The structural analysis methods vary with each element in the end section and are presented in detail in the following sections. Haunch dimensions for determining the critical section location are consistent with the haunch dimensions provided in ASTM C1577-20 since these dimensions are typically smaller than the standard 12 inch haunch used in the Iowa DOT and MnDOT

standards. This approach leads to a conservative design for the end sections mated with Iowa DOT and MnDOT standard barrels.

11.1 Design Model for AH Steel In Walls

The Type 3 end section walls are modeled as a cantilever with the fixed base located at the toe of the haunch. The second precast segment from the end of the barrel is considered the critical segment for the design of the AH steel in the walls for both the first and second precast segments since the first precast segment is assumed to function as a propped cantilever. The design height of the wall is conservatively taken as the maximum segment height. The wall is modeled as a 12 in. wide strip. The AH steel in the walls and floors of the first segment of a Type 1 end section is taken from the design of a Type 3 section of equivalent height.

11.2 Design Model for AH Steel in Floor

In a manner consistent with the barrel design, the end section is assumed to have pinned supports located at the bottom of each wall. Similar to the model presented in Section 11.1, the second precast segment from the end of the barrel is considered as the critical segment for design of the AH steel in the floor for both the first and second precast segments and the design wall height is taken as the maximum segment height. The wall and floor are modeled as 12 in. wide strips. As stated in Section 11.1, the AH steel in the walls and floors of the first segment of a Type 1 end section is taken from the design of a Type 3 section of equivalent height.

11.3 Design Model for As3 Steel in Floor

The model for the As3 reinforcing steel in the floor is identical to the model presented in Section 11.2.

11.4 Design Model Steel on Inside Face of Wall

To generate moments that cause tension in the inside face reinforcing, the wall is modeled as a propped cantilever with a pin support at the top of the wall and a fixed support at the centerline of the floor. This model only applies to the first precast segment from the end of the barrel. Wall height is taken as the rise of the connecting barrel. The wall is modeled as a 12 in. wide strip. This method applies to design of inside face reinforcing for both Type 1 and Type 3 end sections.

11.5 Design Model for Ab Steel in the Slab of Type 1 End Sections

For the design of tension reinforcing for the bottom face of the slab portion of Type 1 end sections, the slab is assumed to act as a simple span. The slab directly supports the dead load of the parapet and the vertical earth load. The live load described in Section 10.8 is distributed proportionally between the slab section and the parapet based on each member's moment of inertia.

11.6 Design Model for A_t Steel in the Slab of Type 1 End Sections

For the design of tension reinforcing for the top face of the slab portion of Type 1 end sections, the slab is assumed to act as a span fixed at both ends. The slab is assumed to directly support the dead load of the parapet, the vertical earth load, and a portion of the live load as described in Section 11.5.

11.7 Parapet and Lintel Beam Design Model

The parapet and lintel beams are designed as a simply supported beam with supports located at the centerline of the walls. The models used for Type 1 and Type 3 parapet design are described below:

- The dead load of the parapet is assumed to be directly supported by the end section slab. As stated in Section 11.5, the live load is distributed between the parapet and the end section slab proportionally based on each member's moment of inertia.
- Parapets of Type 3 end sections at 0° skew are designed to carry the dead load of both the parapet and the lintel beam, the total vertical earth load, and the total live load.
- For skewed Type 3 end sections, the 2'-6 wide portion of non-skewed lintel beam is designed for the moment caused by 50% of the total lintel beam dead load and vertical earth load, with the span taken perpendicular to the barrel centerline. The lintel beam is also designed for the moment generated by 100% of the live load distributed across the 2'-6 beam width. The parapet of a skewed Type 3 end section is designed for the moment from the parapet dead load, as well as moment caused by the remaining 50% of lintel beam dead load and vertical earth load. The live load for the Type 3 parapet is applied to the parapet, with the span taken along the skew.

12 End Section Design

12.1 Resistance Factors

Resistance factors for the end section design are identical to the resistance factors used for the barrel design as presented in Section 8.1.

12.2 Type 3 Reinforcing Layout

Similar to the barrels, the Type 3 end sections are designed for welded wire fabric reinforcing. The naming convention for reinforcing in various sections follows the convention used in the existing Iowa DOT precast end sections and is defined as follows:

- AH – The area of steel AH is located in the outside face of the walls and the bottom face of the floor.
- As3 – The area of steel As3 is located in the top face of the floor.
- As4 - The area of steel As4 is located on the inside face of the walls.

Similar to the barrel sections, the end section haunch reinforcing consists of #3 transverse bars spaced at 12 in. on center. A diagram showing the locations of the various reinforcing designations for the Type 3 precast end section standards is presented in Figure 12-1.

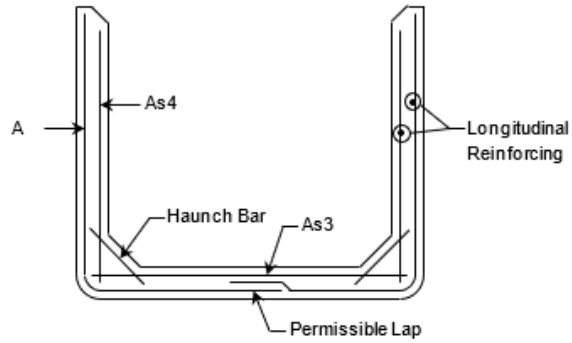

Figure 12-1 Type 3 End Section Reinforcing Layout

12.3 Type 1 Reinforcing Layout

The Type 1 end sections are designed for welded wire fabric reinforcing. The reinforcing for the walls and floor of the first two feet of the precast segment adjacent to the barrel is taken from the design of a Type 3 end section of equivalent height. The remaining sections of a Type 1 end section are identical to that of an equivalent Type 3 end section. The reinforcing for the slab and top half of the walls of a Type 1 end section are defined as follows:

- A_t – Area of steel A_t is located on the outside face of the slab, and continues into the outside face of the walls.
- A_b – Area of steel A_b is located on the inside face of the slab.
- AH, As3, and As4 – These areas of steel are similar to the Type 3 end section areas and are described in Section 12.2.

A diagram showing the locations of the various reinforcing designations for the first two feet of Type 1 precast end section adjacent to the barrel is presented in Figure 12-2 Type 1 End Section Reinforcing Layout.

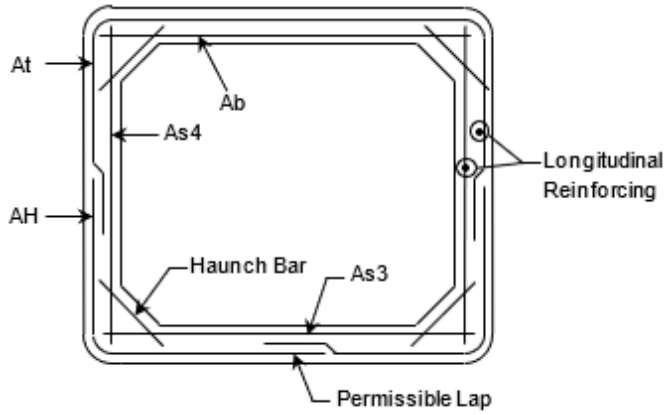

Figure 12-2 Type 1 End Section Reinforcing Layout

12.4 Critical Sections

Critical sections for flexural design are located at the toe of the haunch in the floor and wall for the AH reinforcing and at midspan of the floor for the As3 reinforcing. For the reinforcing on the inside face of the wall, the critical section is located at the point of maximum moment. The critical sections for A_t reinforcing are located at the toe of the haunches and the critical section for A_b reinforcing is located at midspan of the slab. Critical sections for shear capacity are a distance d_v from the toe of the haunch in the floor, walls, and slab.

12.5 Reinforcing Wire Diameter and Maximum Spacing

Effective reinforcing diameter is set at 1 in. The maximum assumed wire spacing is consistent with the barrel design and is assumed to be 4 in.

12.6 Strength-Level Flexural Reinforcing Requirements

The area of reinforcing required to satisfy the strength limit state is determined using AASHTO LRFD Eq. 5.6.3.2.2-1 whereas the barrels were designed using AASHTO LRFD Eq. 12.10.4.2.4a-1. While these two equations appear very different, once the thrust force term is removed from the latter equation, it can be algebraically reconfigured to match the former equation. Hence, the strength-level flexural design requirements for the end sections are identical to the barrel designs.

12.7 Crack Control Requirement

The end section designs determine the minimum reinforcing area required to satisfy the crack control per AASHTO LRFD Art. 5.6.7 using the Class 2 exposure factor and 60% steel stress limit.

12.8 Minimum Reinforcing Requirements

Minimum transverse reinforcing for the end section designs is 0.2% of the gross concrete area, as required by AASHTO LRFD Art. 12.11.5.3.2. Minimum longitudinal reinforcing is set at 0.06 in.^{2}/ft. for 6 ft. through 12 ft. spans and 0.11 in.^{2}/ft. for 14 ft. and 16 ft. spans, following the same methodology used for the barrel designs as discussed in Section 8.7.

12.9 Maximum Reinforcing Requirements

Maximum reinforcing for the end section designs is limited to 63.4% of ρ_b to ensure the section remains “tension-controlled”. The basis of this limit is described in Section 8.8.

12.10 Shear Capacity

Shear capacity for the end section walls and floor is calculated per the simplified procedure presented in AASHTO LRFD Art. 5.7.3.4.1. In the case of the end sections, adequate results are provided by the simplified procedure and thus the more complex general procedure was not employed in the end section design.

TABLE OF CONTENTS ~ ACCELERATED BRIDGE CONSTRUCTION

8 Accelerated Bridge Construction
8.1 General
8.1.1 Policy overview
8.1.2 Design information
8.1.3 Definitions
8.1.4 Abbreviations and notation
8.1.5 References
8.1.5.1 Direct
8.1.5.2 Indirect
8.1.5.3 Web sites
8.1.5.4 Iowa ABC projects
8.2 Decision making
8.2.1 Bridge replacement projects
8.2.1.1 First stage decision making – ABC rating score
8.2.1.2 Optional second stage decision making – Analytical hierarchy process tool
8.2.1.3 Concept development
8.2.2 Emergency projects
8.2.3 Repair and rehabilitation projects
8.3 Technologies
8.3.1 Foundation and wall elements
8.3.2 Rapid embankment construction
8.3.3 Prefabricated bridge elements and systems
8.3.4 Structural placement methods
8.3.5 Fast track contracting
8.3.5.1 Accelerated project delivery
8.3.5.2 Contracting provisions
8.4 Quality control
8.4.1 Certification
8.4.2 Inspection
8.5 Details
8.6 Costs

8 Accelerated Bridge Construction

8.1 General

The series of articles is intended to fit together as a unit. As much as possible, cross references are used to avoid duplication.

8.1.1 Policy overview

The monetary costs of construction can be measured in two ways. The first is the actual construction cost of the project in tax dollars. ABC projects will, in general, increase construction costs and will therefore use up more public tax dollars. The second is the monetary cost to society primarily caused by delays during construction. ABC projects will reduce construction time and thereby reduce the cost to society caused by delays. Consideration of these two factors must be kept in mind when considering the benefits of conventional versus ABC approaches to construction projects.

Iowa has used, on a limited and mostly experimental basis, ABC methods to quickly deliver bridge replacement projects. The success of these projects forms the basis of Iowa's approach which will provide consideration of ABC techniques on a more routine basis. The overall goal of Iowa's policy is to improve public safety, reduce road user costs, and provide better overall experience for the travelling

public while building long lasting highway structures. By doing so, the Department is willing to recognize societal costs as real construction costs. The ABC decision-making process used in Iowa is described below. Additionally, common ABC technologies are described with an emphasis on those expected to be more frequently employed in Iowa.

8.1.2 Design information

The increase in the number of bridges built using ABC has led and will continue to lead to growth in innovation for all aspects of ABC and in bridge construction in general. Designers need to assure that newer ABC techniques are carefully thought through since many will have only seen limited use. There are a significant number of resources final designers can draw from in order to successfully complete an ABC design. These resources are covered more fully in the articles that follow, but they generally include Iowa standard details and design practices used for traditional projects, completed Iowa ABC projects, ABC projects in other states, and information found on web sites dedicated to ABC. Designers should consult the references listed under BDM 8.1.1.5 for further information.

8.1.3 Definitions

A + B Bidding is a Cost-Plus-Time bidding procedure. The low bidder is selected based on a combination of the contract bid items (A) and the time bid for construction multiplied times the daily road user cost (B). The days bid become the contract time.

Accelerated Bridge Construction (ABC) can be described in a variety of ways but is generally defined as using prefabricated bridge elements, combining elements into systems, moving a complete bridge span, or using various contracting methods to quickly deliver a project and re-open a highway to traffic.

Accelerated Project Delivery Methods (APDM) refers to fast track contracting methods such as design-build, partial design-build, and construction manager general contractor.

Calendar Day is the specified number of days for completion of the project. This is in contrast to Working Day which takes into account weather conditions that would not permit the contractor to work.

Construction Manager/General Contractor (CMGC) is an accelerated project delivery method which occupies the middle ground between the traditional design–bid–build and design–build. In a typical CMGC scenario, the owners of a project hire either a general contractor or design firm to serve as the construction manager, placing responsibility for design review, design modifications, system integration, and construction with that single contractor. CMGC allows State DOTs to remain active in the design process while assigning risks to the parties most able to mitigate them. As with the design–build approach, there are potential time savings because of the ability to undertake a number of activities concurrently.

Design-Bid-Build (DBB) is a traditional project delivery method wherein a project is designed, put out for bid to construction firms, and then built by the winning bidder.

Design-Build is an accelerated project delivery method in which the design and construction phases are combined into one contract thereby eliminating the separate bid phase in the traditional design-bid-build method which in turn allows certain aspects of design and construction to take place at the same time.

Economy of Scale refers to the repetition of the elements and processes, and how they relate to the overall cost of a project, as well as the possible savings to future projects.

Get In, Get Out, Stay Out is an FHWA initiative that reflects the desire to minimize traffic congestion caused by construction work zones and to shorten road closure times due to bridge reconstruction and replacement.

Incentive/Disincentive incorporates the daily road user traffic cost into the contract as liquidated damages (disincentive) and as an incentive. When used as an incentive the contractor receives the daily

road user cost for each day they substantially complete the project or a specific phase of the project early. A maximum number of days of incentive that can be earned is specified in the contract.

Indirect Societal Costs refers to user costs associated with delays and detours, revenue loss to local businesses, livability during construction, and safety risks for users and construction personnel.

Innovative Contracting Methods typically refer to unique contracting methods such as cost plus time contracting (A+B) and best value selection (BVS), and accelerated bridge project delivery methods such as design-build, construction manager general contractor (CMGC),

Lane Rental is a contracting strategy used to improve management of temporary lane closures. The contractor is assessed an hourly or daily rental fee for each lane, or combination of lanes taken out-of-service during a project to minimize the time of the roadway restriction impacting traffic flow. The rental fee is based on hourly or daily road user costs.

Near Site Fabrication is a process of constructing prefabricated elements near the bridge construction site in order to minimize problems with shipping of large elements.

No Excuse Bonus is a modified version of an incentive. The contractor receives the bonus amount specified when they substantially complete the project or a specific phase of the project by the date listed in the proposal, however, no adjustments to the specified date is allowed for any reason regardless of who is responsible. The contractor is motivated to work around conflicts such as weather or utilities.

Prefabricated Bridge Elements and Systems (PBES) are structural components of a bridge that are built offsite, or near-site of a bridge and include features that reduce the onsite construction time and the mobility impact time that occurs when building new bridges or rehabilitating or replacing existing bridges relative to conventional construction methods. Prefabricated elements are a category of PBES which comprise a single structural component of a bridge such as deck, beam, or pier element. Prefabricated systems are a category of PBES that consists of an entire superstructure, an entire superstructure and substructure, or a total bridge that is procured in a modular manner such that traffic operations can be allowed to resume after placement.

Road User Costs are a measure of the financial impact of a construction project on the traveling public. The major contributing factors in calculating user costs are delay/detour time, average daily traffic, and the duration of the impact to users. Reduced roadway capacity, slower travel speeds, and delays in opening a new or improved facility that prevents users from gaining travel time benefits can also be included.

Self-Propelled Modular Transporter (SPMT) is a high capacity transport trailer that can lift and move prefabricated elements with a high degree of precision and maneuverability.

Substructure is any construction below the bearing seats or, in the absence of bearings, below the soffit of the superstructure.

Superstructure is any construction above the bearing seats or, in the absence of bearings, includes the soffit and any construction above the soffit.

Traditional Direct Costs refers to costs that must be financed by project dollars. These costs include construction, maintenance of traffic, design and construction of detours, right of way acquisition, project design and development, maintenance of essential services, and construction engineering.

8.1.4 Abbreviations and notation

A+B, cost plus time contracting
AADT, average annual daily traffic
ABC, accelerated bridge construction

ADT, average daily traffic
ADTT, average daily truck traffic
AHP, analytic hierarchy process
APDM, accelerated project delivery methods
BSB, Bridges and Structures Bureau
CIP, cast-in-place
CMGC, construction manager general contractor
DB, the Design Bureau
DBB, design-bid-build
EDC, every day counts
EPS, expanded polystyrene
FHWA, Federal Highway Administration
GEC, Geotechnical Engineering Circular
GRS-IBS, Geosynthetic reinforced soil integrated bridge system
I/D, Incentive/Disincentive
Iowa DOT, Iowa Department of Transportation
LEB, Location and Environment Bureau
LRFD, load and resistance factor design
MDT, multi-disciplined team
MSE, mechanically stabilized earth
P10L, designation for the LRFD pile bent standard [BSB SS P10L], which replaces the P10A pile bent standard
PBES, prefabricated bridge elements and systems
PPCB, pretensioned prestressed concrete beam
RSB, rolled steel beam
SCC, self-consolidating concrete
SIP, stay-in-place
SPMT, self-propelled modular transporters
TS&L, type, size, and location
UHPC, ultra-high performance concrete

8.1.5 References

8.1.5.1 Direct

Throughout the ABC section there may be direct references to specific portions of standards and publications. Direct references are included in brackets [ ] using the abbreviations given below.

Although the latest editions are listed below there may be some circumstances in which referenced documents have been prepared on the basis of previous editions.

[AASHTO division article, table, or figure] refers to AASHTO *Standard Specifications for Highway Bridges, 17th Edition (2002)* with current errata changes - design, seismic design, or construction division with article, table, or figure number.

[AASHTO-LRFD article, table, or figure] refers to *AASHTO LRFD Bridge Design Specifications, 5th Edition (2010)* with article, table, or figure number.

[BDM article, table, figure, or note] refers to *LRFD Bridge Design Manual* with article, table, figure, or plan note number. (Available on the Internet at http://www.iowadot.gov/bridge/manuallrfd.htm)

[IDOT SS article] refers to Iowa Department of Transportation *Standard Specifications for Highway and Bridge Construction, Series 2009* with article number. (Available on the Internet at: http://www.iowadot.gov/erl/index.html)

8.1.5.2 Indirect

Indirect references are general and infrequent sources of information that usually are not linked with specific article or section numbers.

Culmo, M. P., *Accelerated Bridge Construction - Experience in Design, Fabrication and Erection of Prefabricated Bridge Elements and Systems*, CME Associates Inc., FHWA-HIF-12-013, November 1, 2011. (Available on the Internet at: http://www.fhwa.dot.gov/bridge/abc/docs/abcmanual.pdf)

Emulating Cast-in-Place Detailing in Precast Concrete Structures, ACI 550.1R-01, September 2001. (Available on the Internet at: http://mahabghodss.net/NewBooks/www/web/digital/standard/ACI/Part%206/550.1R-01.pdf)

Decision-Making Framework for Prefabricated Bridge Elements and Systems (PBES), FHWA-HIF-06-030, May 2006

Manual on the Use of Self-Propelled Modular Transporters to Remove and Replace Bridges, FHWA-HIF-07-022, June 2007

Culmo, M. P., *Connection Details for Prefabricated Bridge Elements and Systems*, CME Associates Inc., FHWA-IF-09-010, March 2009.

Doolen, T., A. Saeedi, S. Emami, *Accelerated Bridge Construction (ABC) Decision Making and Economic Modeling Tool*, Final Report, Project TPF-5(221), Oregon State University, 2011. (Available on the Internet at https://rosap.ntl.bts.gov/view/dot/23739)

8.1.5.3 Web sites

Web site references are general, but frequent sources of information. General web site references are included in brackets [ ] using the abbreviations given below. If a specific web page is referenced the link to the website will be provided in brackets.

[AASHTO TIG SPMT webpage] refers to AASHTO Technology Implementation Group SPMT webpage (Available on the Internet at: http://tig.transportation.org/Pages/SelfPropelledModularTransporters.aspx)

[FHWA ABC webpage] refers to FHWA - Accelerated Bridge Construction webpage (Available on the Internet at: http://www.fhwa.dot.gov/bridge/abc/index.cfm)

[FHWA EDC webpage] refers to FHWA - The Every Day Counts Initiative webpage (Available on the Internet at: http://www.fhwa.dot.gov/everydaycounts/)

[FHWA HFL webpage] refers to FHWA - Highways For Life webpage (Available on the Internet at: http://www.fhwa.dot.gov/hfl/)

[FIU ABC Center webpage] refers to Florida International University (FIU) – Accelerated Bridge Construction Center webpage (Available on the Internet at: http://www.abc.fiu.edu/)

[IDOT ABC webpage] refers to Iowa DOT's Research and Investigations webpage (Available on the Internet at: http://www.iowadot.gov/bridge/index.htm#)

[ODOT ABC webpage] refers to Ohio DOT's Build Bridges Faster, Smarter, Better webpage (Available on the Internet at: http://www.dot.state.oh.us/Divisions/Engineering/Structures/standard/Maintenance/Pages/SI9.aspx)

[PCA ABC webpage] refers to PCA ABC webpage (Available on the Internet at: http://www.cement.org/bridges/br_abc.asp)

[UDOT ABC webpage] refers to Utah DOT's ABC webpage (Available on the Internet at: http://www.udot.utah.gov/main/f?p=100:pg:0:::1:T,V:1991,)

[WSDOT ABC webpage] refers to Washington DOT's ABC webpage (Available on the Internet at: https://wsdot.wa.gov/engineering-standards/design-topics/accelerated-innovative-bridge-construction

8.1.5.4 Iowa ABC projects

A number of projects in Iowa have used various ABC technologies. Most of these ABC projects are listed in Table 8.1.5.4 by bridge design number and county with the exception of the Wapello project which lists the county project number. The table also lists the various components that have been used for each project. Most of the components are prefabricated bridge elements or systems, but at least one project also included an innovative contracting method combined with staged construction. A number of these projects have plans, photographs, reports, papers, and power point presentations available on the Iowa DOT Bridges and Structures Bureau website [IDOT ABC webpage].

Table 8.1.5.4. ABC Experience at Iowa DOT

ABC Components	**703 O' Brien**	**106 Boone (Mackey Bridge)**	**106 Madison**	**305 Marion**	**508 Pottawattamie (CB 24th)**	**208 Bremer**	**109 Buena Vista**	**210 Washington**	**111 Pottawattamie (Keg Creek)**	**L-#39--73-90Wapello (Waffle Deck)**	**113 Cass (Massena)**
Approach pavement	X					X		X	X		
Abutment wings							X		X		X
Integral abutments		X	X				X				
Semi-integral abutments									X		X
Drilled shafts									X		
Pile bents		X									
Frame piers									X		
T-piers											
Box beams			X				X				
PPCB + diaphragms		X								X	X
RSB + diaphragms											
Full depth precast deck		X			X					X	
Rails											
RSB + deck + rail									X		
Paving notch repair				X							
A + B contracting					X						
Staged construction					X						
I/D contracting							X		X		X
Slide-in bridge constr.											X
UHPC									X	X	
Post-Tensioning		X			X						
Grouted splice coupler									X		

8.2 Decision making

8.2.1 Bridge replacement projects

Except for emergency projects the typical approach to evaluating projects for acceleration is multi-phased involving a concept team consisting of DOT staff from multiple Bureaus including the District, BSB, DB, LEB and other Bureaus as necessary. The general decision making process for selecting ABC projects is illustrated in the ABC Decision Process Flowchart in Figure 8.2.1-1.

The decision making process involves one basic stage with an optional second stage.

The concept team will initially assess the applicability of ABC to bridge construction projects based on the ABC rating score. The ABC rating score acts as a filter by ranking the suitability of bridge replacement candidates for ABC based on a set of measures. The ABC rating score and the first stage decision making based on the score are addressed in BDM 8.1.2.1.1.

Bridge projects identified as potential ABC candidates in the first stage of the decision making process may use the optional second stage or proceed directly to the third stage. The optional second stage should be used when a project is borderline or where a very large and costly project is being considered and a more rigorous evaluation is desired to determine if ABC is appropriate. The optional second stage evaluation involves the use of the ABC AHP decision making software tool as described in BDM 8.1.2.1.2. The concept team can use the results of the software analysis to further determine if ABC alternatives should be developed in conjunction with traditional alternatives as part of the concept.

The Project Delivery Division Director and BSB Advisory Team must approve any ABC candidates before they are further developed as part of a concept. The BSB Advisory Team will consist of the Bridge Engineer, Assistant Bridge Engineer, Chief Structural Engineer, Preliminary Bridge Unit Leader, and a Preliminary Bridge Engineer. The BSB Advisory Team will prioritize the list of ABC candidates and establish recommendations to the Project Delivery Division Director. At this point in the decision making process the focus will be on evaluating Division resources in terms of funding and staffing. Viable candidates for ABC may be deferred or rejected due to scheduling issues or the lack of program funding. If approval is given, then a traditional option and an ABC option will be fully developed as part of the concept. Developing the ABC option will require the concept team to consider, among other things, viable approaches to contracting methods, structural placement techniques, and the use of prefabricated elements and systems in order to ensure the project can be constructed in the construction time allotted. See BDM 8.1.2.1.3 for additional details about ABC concept development. Once all the alternatives have been reviewed the concept team may include an ABC approach as the recommended alternative in the final concept letter that is sent out for review to various Bureaus and the District. If there is general concurrence with the ABC option as the recommended approach, then the project-specific ABC approach will be further developed in a TS&L plan by the Preliminary Bridge Design Unit.

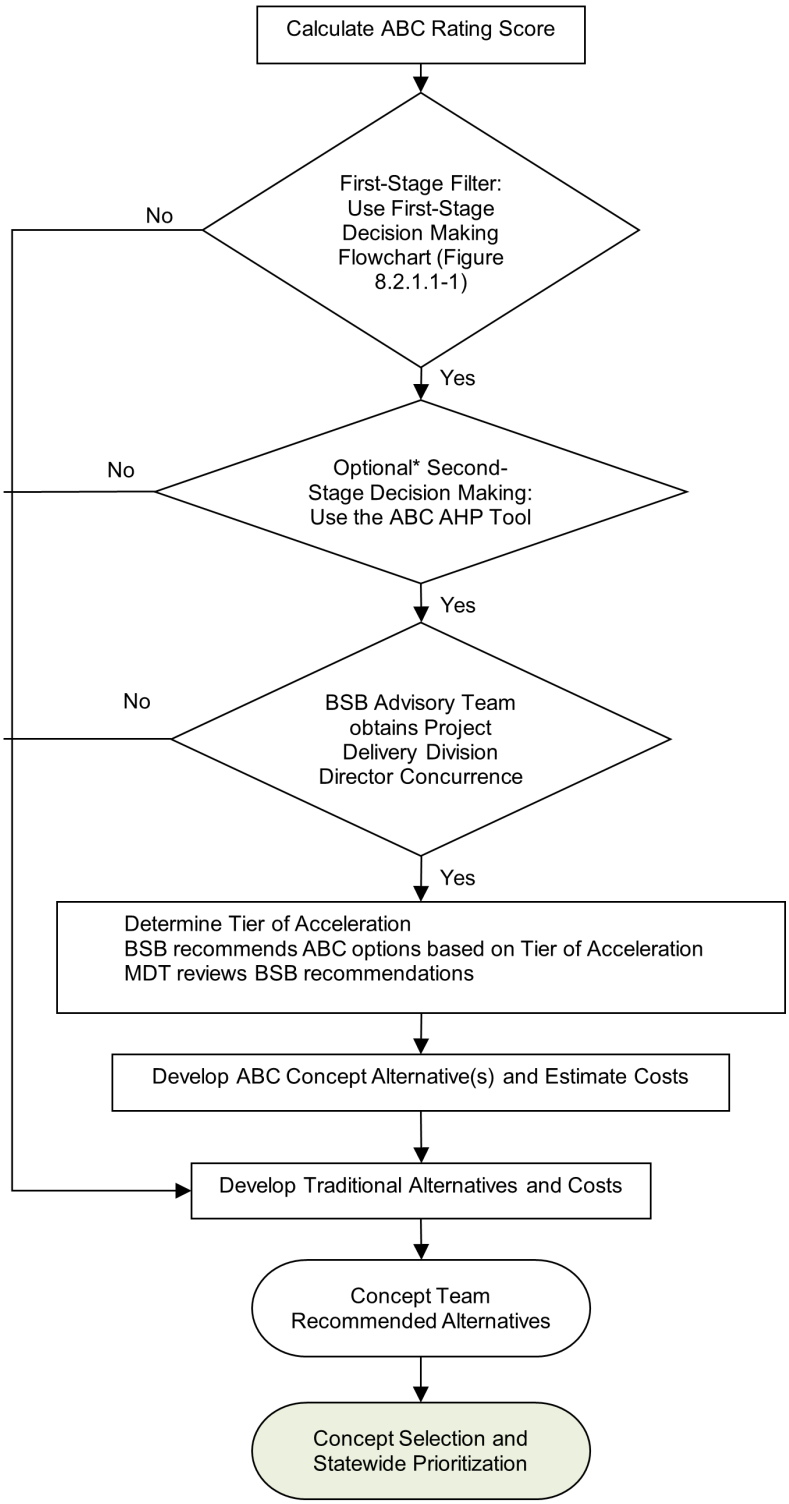

Figure 8.2.1-1. ABC Decision Process Flowchart
* This step may be eliminated as discussed in 8.2.1

8.2.1.1 First stage decision making – ABC rating score

During the first stage of the decision making process the concept team will assess the applicability of ABC to bridge construction projects using the ABC Decision Making Flow Chart illustrated in Figure 8.2.1-1. The main tool to assist the concept team in their decision to take a project to the second stage in the decision making process is the ABC rating score.

The ABC rating score is a numerical value from 0 to 100 indicating the viability of bridge construction projects for considering ABC concepts. The higher the score the more suited a project is for ABC. The ABC rating score has been categorized into two ranges. Bridges with a score of 50 or more are automatically further evaluated for consideration of ABC techniques. Bridges with a score of less than 50 will only be evaluated further at the request of the District who may be aware of unique circumstances, such as a critical environmental issue, that may make the project suitable for ABC.

The ABC rating score is based on a set of measures which include AADT, Out of Distance Travel, User Costs, and Economy of Scale. The measures are based on National Bridge Inventory (NBI) records as coded according to the Structure Inventory and Appraisal (SI&A) guide. Each measure is scored based on a set of criteria. The measure scores are multiplied by a weight factor to account for their relative importance. The individual weighted measure scores are then summed together to form an overall weighted score which can have a maximum value of 165. The overall weighted score is then normalized to a 100 point scale to become the ABC rating score. The measures are described below:

- Average annual daily traffic (AADT) - This is a measure of the amount of traffic traversing the bridge site. Use a value equal to the total number of vehicles (AADT) on the bridge plus 25% of the AADT for the roadway under the bridge if applicable. This measure has a weight of 10.

AADT score	AADT criteria
0	No traffic impacts
1	Less than 5000
2	5000 to less than 10,000
3	10,000 to less than 15,000
4	15,000 to less than 20,000
5	20,000 or more

- Out of distance travel (OODT) - This is a measure of the impact that a project has on vehicles when the construction site is closed to traffic. OODT is the additional distance traveled along a detour in miles for traffic when a bridge is closed due to construction. This measure has a weight of 10.

OODT score	OODT criteria
0	No OODT
1	Less than 5 miles
2	5 miles to less than 10 miles
3	10 miles to less than 15 miles
4	15 miles to less than 20 miles
5	20 miles or more

- Daily road user costs (DRUC) - This is a measure of the daily financial impact of a construction project on the traveling public. The major contributing factors in calculating user costs are OODT and AADT on the bridge. The standard method the Department has for calculating user costs is the formula:

$$\text{DRUC (\$)} = (\text{AADT} + 2 * \text{ADTT}) * (\text{OODT}) * (\text{Mileage Rate})$$

The mileage rate is currently set at 37.5 cents per mile (2016). Average daily truck traffic (ADTT) is counted at three times the amount of other traffic. This measure has a weight of 10.

DRUC score	DRUC criteria
0	No DRUC
1	Less than $10,000
2	$10,000 to less than $50,000
3	$50,000 to less than $75,000
4	$75,000 to less than $100,000
5	$100,000 or more

- Economy of scale (EOS) - This measure accounts for the repetition of the elements and processes, and how they relate to the overall cost of a project, as well as the possible savings to future projects. The total number of spans is used in order to account for repetition of substructure elements as well as superstructure elements. This measure has a weight of 5.

EOS score	EOS criteria
0	1 span
1	2 or 3 spans
2	4 or 5 spans
3	6 spans or more

There are two additional measures which will automatically generate a minimum ABC Rating Score of 50 if the calculated score is less than 50. The first determining factor for receiving an automatic score of 50 is if the out of distance travel for the detour is 30 or more miles. This much out of distance travel was considered sufficiently long that some consideration ought to be given to ABC techniques. The second factor for receiving a score of 50 is if the structure is an interstate bridge.

The ABC rating scores for all state bridges will be made available in the Structure Inventory and Inspection Management System (SIIMS). Ultimately knowledge and judgment among the various Bureaus must be used to establish the suitability of a particular project for ABC even though the ABC rating score helps to establish the most likely candidates.

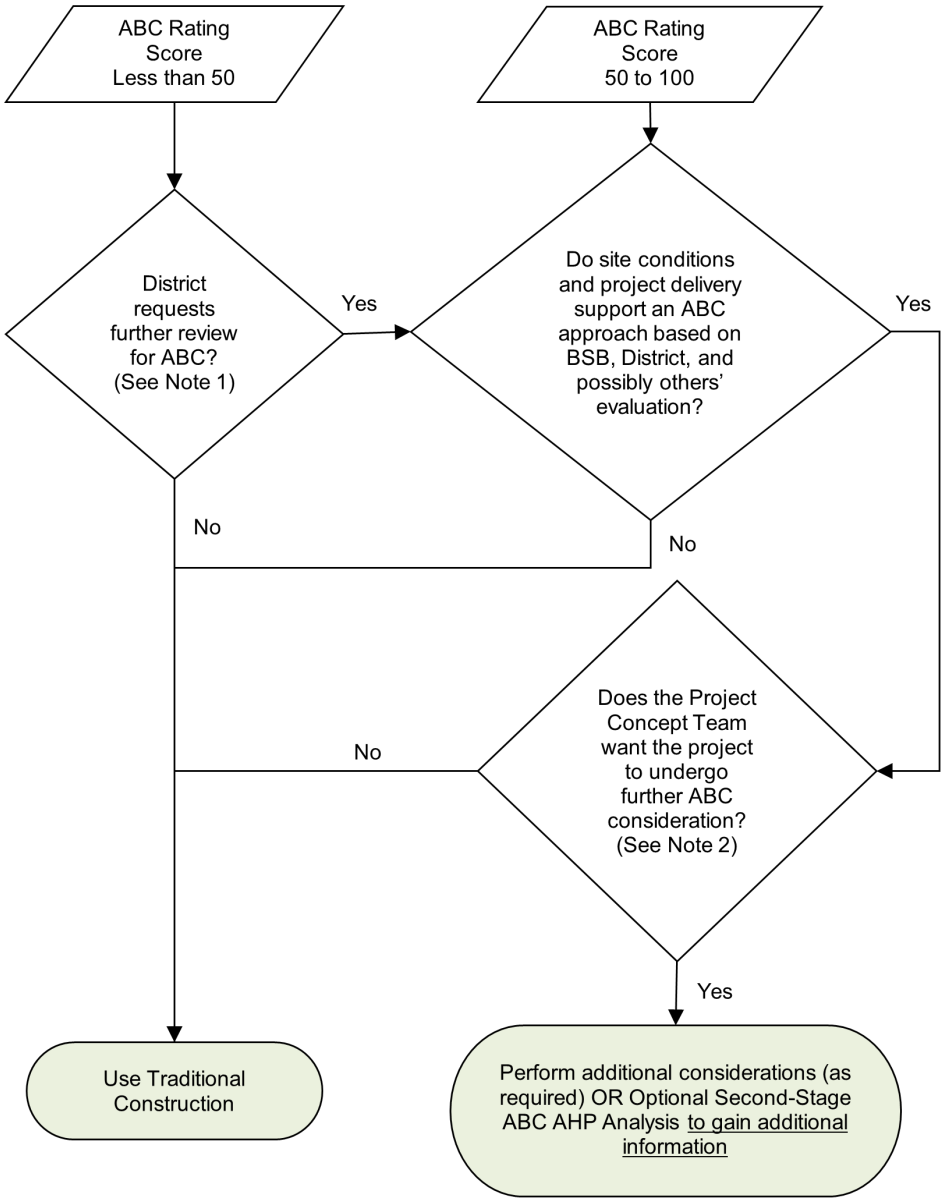

Note 1: The District may determine that some projects with an ABC Rating Score of less than 50 should still be considered for ABC based on factors such as long detours, environmental issues, safety issues, lost local business revenue, critical structure for emergency route, etc. In these cases, the District may submit specific projects to undergo a review to see if site conditions and project delivery will support an ABC approach and, ultimately, if the project will proceed to the second-stage of the decision making process.

Note 2: The Project Concept Team may want to exclude some projects from further consideration of ABC. Two of the main reasons for excluding projects for further evaluation are limited funds for ABC and limited staffing hours to perform the evaluations. These reasons may dictate that a smaller set of the more viable ABC projects only be considered in the second-stage of the decision making process. Additionally, as experience with choosing ABC projects progresses it may be clear that some projects are not suitable based on the ABC AHP criteria even without running the software.

Figure 8.2.1.1-1. ABC Decision Flowchart

8.2.1.2 Optional second stage decision making – Analytical hierarchy process tool

The ABC AHP Decision Making Software is used in the Department's optional second stage decision making process. The software tool was developed at Oregon State University through a multi-state pooled fund project conducted under the leadership of the Oregon DOT. This software allows for the qualitative analysis of various construction alternatives based upon user selected criteria and sub-criteria. Such a qualitative assessment does not require detailed cost data for specific alternatives. Rather, general ABC concepts can be compared against general traditional construction approaches. It is, however, critical that the decision making committee have intimate knowledge of site and geographic specifics. It is, therefore, critical that input be sought from all disciplines and interested parties and Bureaus.

The ABC AHP Decision Making Software was developed with five general categories of criteria to be considered during analysis. These five categories provide mechanisms to assess different options with metrics that are important and specific to each site. The five categories are:

- Direct Costs
- Indirect Costs
- Schedule Constraints
- Site Constraints
- Customer Service

Each of the above listed criteria has sub-criteria for which each alternative will be assessed. The sub-criteria and its definition are listed below:

- Direct Costs
    - Construction – This factor captures the estimated costs associated with the construction of the permanent structure(s) and roadway. This factor includes premiums associated with new technologies or innovative construction methods. Premiums might result from factors such as contractor availability, materials availability, and contractor risk. It may include incentive/bonus payments for early completion and other innovative contracting methods.
    - Maintenance of Traffic – This factor captures the maintenance of traffic (MOT) costs at the project site. MOT costs may impact preference due to its impact on total costs. This factor includes all costs associated with the maintenance of detours before, during, and after construction. Examples of this factor include: installation of traffic control devices, maintenance of detour during construction including flagging, shifting of traffic control devices during staged construction, restoration associated with the temporary detours upon completion of construction.
    - Design and Construct Detours – This factor captures the costs to design and construct temporary structures and roadways to accommodate traffic through the project site.
    - Right of Way – This factor captures the cost to procure Right of Way (ROW). This factor includes either permanent or temporary ROW procurements/easements.
    - Project Design and Development – This factor captures the costs associated with the design of permanent bridge(s) and costs related to project development based on the construction method.
    - Maintenance of Essential Services – This factor captures the costs associated with the need to provide essential services that may be impacted by the construction method selected. Examples of this factor include: alternate routes or modes of transportation to provide defense, evacuation, emergency access to hospitals, schools, fire station, law enforcement, etc. This criterion is for situations where measures need to be implemented beyond those already considered in the "MOT" and "Design and Construct Detours" criteria.
    - Construction Engineering – This factor captures the costs associated with the owner's contract administration for the project.

    - Inspection, maintenance, and preservation – This factor captures the life cycles costs associated with the inspection, maintenance, and preservation of individual bridge elements.

- Indirect Costs
    - User Delay – This factor captures costs of user delay at a project site due to reduced speeds and/or off-site detour routes.
    - Freight Mobility – This factor captures costs of freight delay at a project site due to reduced speeds and/or off-site detour routes.
    - Revenue Loss – This factor captures lost revenues due to limited access to local businesses resulted from limited or more difficult access stemming from the construction activity.
    - Livability During Construction – This factor captures the impact to the communities resulting from construction activities. Examples include noise, air quality, and limited access.
    - Road Users Exposure – This factor captures the safety risks associated with user exposure to the construction zone.
    - Construction Personnel Exposure – This factor captures the safety risks associated with worker exposure to the construction zone.
- Schedule Constraints
    - Calendar or Utility or Railroad, or Navigational – This factor captures the constraints placed on the project that might impact the timing of construction as a result of weather windows, significant or special events, railroad, or navigational channels.
    - Marine and Wildlife – This factor captures the constraints placed on the project by resource agencies to comply with marine or wildlife regulations. Examples include in-water work windows, migratory windows, and nesting requirements.
    - Resource Availability – This factor captures resource constraints associated with the availability of staff to design and oversee construction. For example, additional time constraints may exist if a project must be outsourced.
- Site Constraints
    - Bridge Span Configurations – This factor captures constraints related to bridge span configurations. This element may impact owner preference regarding bridge layout, structure type, or aesthetics.
    - Horizontal/Vertical Obstructions – This factor captures physical constraints that may impact construction alternatives. Examples include bridge next to fixed objects such as tunnels, ROW limitations, sharp curves or steep grades, or other urban area structures that constrain methods and/or bridge locations.
    - Environmental – This factor captures the constraints placed upon the project by resource agencies to minimize construction impacts on natural resources including marine, wildlife, and flora.
    - Historical – This factor captures historical constraints existing on a project site.
    - Archaeological Constraints – This factor captures archaeological constraints existing on a project site.
- Customer Service
    - Public Perception – This factor captures both the public's opinion regarding the construction progress and their overall level of satisfaction.
    - Public Relations – This factor captures the costs associated with the communication and management of public relations before and during construction.

Typically, if the concept team members opt to perform the ABC AHP analysis, they will perform the process as a group to take advantage of the diverse experience of the team. District staff can offer intimate knowledge of local site constraints, community concerns, and other relevant information that may not be available to Central Complex staff. While Central Complex staff with expertise in various phases of project development, planning, design, contract letting, construction, etc. can provide the data needed for the analysis.

In the initial evaluation the concept team will compare an ABC option with a traditional option. This exercise may be repeated with modified design concepts as often as deemed necessary. It is expected that the initial run will take about two hours.

8.2.1.3 Concept development

For bridge replacement projects the construction process needs to accommodate traffic. The conventional methods of handling traffic normally result in a detour, temporary bridge with a bypass/runaround, crossovers, or staged construction. Each of these methods can have a significant impact on construction and user costs as well as worker and motorist safety. ABC seeks to address these issues by significantly shortening the duration of two time metrics:

- Onsite construction time – Any period of time from when a contractor alters the project site location until all construction-related activity is removed. This includes, but is not limited to, the removal of maintenance of traffic items, construction materials, equipment, and personnel.
- Mobility impact time - Any period of time the traffic flow of the transportation network is reduced due to onsite construction activities.

Of the two time metrics mobility impact time is the most important since it directly affects the traveling public. In general, for bridge replacement projects the Iowa DOT considers five tiers with respect to complete road closure:

- Tier 1 – Traffic impacts within 24 hours
- Tier 2 – Traffic impacts within 3 days
- Tier 3 – Traffic impacts within 2 weeks
- Tier 4 – Traffic impacts within 3 months
- Tier 5 – Traffic impacts greater than 3 months

When selecting ABC candidates, it is important to determine the mobility impact time because it has a significant effect on what ABC techniques are used and what the project cost will be. Tier 1 and 2 will generally require entire bridge superstructures to be placed as a unit. Tier 3 and some tier 4 projects will tend to favor the use of prefabricated bridge elements. Tier 4 and 5 projects are much more likely to use traditional construction methods within an accelerated construction timeline.

The concept team has the responsibility to determine the level of acceleration that is warranted for a specific site. Once the appropriate acceleration tier has been selected BSB will then recommend ABC concepts to achieve the desired acceleration. In some cases, it will be desirable to collaborate with local contractors and fabricators before fully developing an ABC concept alternative. Collaboration to provide input on the project concept options will be handled by means of a multi-disciplined team (MDT). The MDT would consist of bridge designers (assigned to the project if possible), a representative from the respective District, Construction and Material Bureau, and selected industry contractors. This team would provide input to the identified concept options in the approach to the specific projects and guide the designers in the most viable option(s). This team could be scheduled to meet on a quarterly basis for review and discussion of project concepts.

8.2.2 Emergency projects

Emergency repair or replacement projects will typically be the result of extreme events such as flood damage, fire, roadway vehicle impact, and waterway vessel collision. Less common events could also include terrorist activities and unanticipated structural failures due to regular or accelerated wear under typical operating conditions. Regardless of the cause of the emergency the goal behind any emergency project is to quickly restore the affected portion of the transportation network back to full capacity.

Due to the immediate need imposed by an emergency the decision making process will not typically follow the process outlined above. Relatively common emergency project procedures for damage to overpasses by vehicles with overheight loads are addressed in BDM 8.1.10. These procedures may also be useful for other small-scale emergencies. Large scale or uncommon emergencies may require an emergency response team to be assembled from various Bureaus in order to expedite a project.

Prequalified design consultants and contractors may also be brought in on an on-call basis in order to develop a response plan. Involvement from other agencies such as the U.S. Army Corps of Engineers may also need to be quickly established. Depending on the nature and extent of the emergency it may be necessary to have Department personnel on call for 24 hours per day, 7 days per week.

Some of the keys to mitigate losses and ease the inconvenience to the travelling public include quick response times with respect to the following: stabilizing damaged structures to prevent further damage to property and injury to traveling public, providing the required construction equipment and manpower for rescue and recovery efforts, establishing detour routes, and making the detour information available to the general public as quickly as possible to ease traffic congestion.

In order to expedite design and construction schedules a thorough damage assessment must be quickly performed in order to establish the scope of the project and to allow any demolition and damage removal to begin immediately. Using established contracting methods and procedures will speed up the contract negotiation process and avoid future contract disputes. Traditional contracting methods, such as cost plus time and materials, and lump sum, and innovative contracting methods such as A+B bidding have an appropriate role in different situations. Incentive and disincentive clauses are also very effective in motivating design firms, contractors, and material suppliers to complete the work.

Modifying time-based specifications for concrete to the maturity method is also very important to expedite emergency projects.

8.2.3 Repair and rehabilitation projects

In principle, projects that involve deck or superstructure replacement could be constructed with ABC techniques much in the same way that bridge replacement projects are handled. Other projects affecting traffic flow, such as approach slab replacements, deck overlays, joint repairs, and other bridge repairs could also be accelerated. Projects of these types will be addressed by the Burau on case-by-case basis and discussed with the District.

8.3 Technologies

There are a variety of available ABC technologies which are classified under five different headings:

- Foundation and wall elements
- Rapid embankment construction
- Prefabricated bridge elements and systems (PBES)
- Structural placement methods
- Fast track contracting

The first four components focus primarily on methods designed to accelerate the actual on-site bridge construction. The fifth technology is primarily concerned with accelerating project delivery by the use of contracting methods and language.

The purpose of this article is to not only describe some of the common technologies that are used nationwide, but also to highlight those technologies that are more likely to be commonly used in Iowa. Some of the technologies listed in the sections that follow have already been used in Iowa projects, but there are others that have not yet been tried that the Department believes may have more potential application in Iowa. This article should not be viewed as setting forth the only available options or the only options that may be considered.

8.3.1 Foundation and wall elements

Some ABC techniques for foundation and wall elements that have been used around the nation are briefly described below.

- Continuous flight auger (CFA) piles

  Conventional construction of deep foundation elements, such as drilled shafts, is typically a multi-step process. Installation of a CFA pile combines these steps into a single, continuous process. CFA piles are characterized by drilling a hollow-stem auger into the ground to form

the pile's diameter. Sand-cement grout or concrete is pumped into the hole as the auger is removed, eliminating the need for temporary casing or slurry. After the auger is removed, reinforcement is installed. [For additional details see GEC No. 8 "Design And Construction Of Continuous Flight Auger Piles" at http://www.fhwa.dot.gov/engineering/geotech/pubs/gec8/.] Approval from BSB and the Design Bureau's Soil Unit should be sought before using CFA piles on a state project since the technology is new to Iowa.

- Geosynthetic reinforced soil integrated bridge system (GRS-IBS)
  A method of foundation installation that combines the foundation, abutment, and approach into one composite material.GRS -IBS technology uses alternating layers of compacted granular fill material and fabric sheets of geotextile reinforcement to provide support for the bridge. The internal soil is typically retained by non-structural modular block wall facing elements in order to prevent erosion. GRS-IBS also provides a smooth transition from the bridge onto the roadway, and alleviates the "bump at the bridge" caused by uneven settlement between the bridge and approach roadway. The technology offers unique advantages in the construction of small bridges. A number of county bridges in Iowa have been built using this technology. One state-owned bridge on IA 3 near Pocahontas (FHWA 040101, Maint. No. 7606.0S003) has also been built. Some of the benefits of this system include reduced construction time and cost, simple construction using common equipment and materials with non-specialized labor, and flexible design that can accommodate utilities and unforeseen site conditions. This technology is generally recommended for grade crossings, but has been used extensively for stream crossings. For stream crossings, additional consideration must be given to the protection of the GRS perhaps by using a sheet pile facing. [For additional information see http://www.fhwa.dot.gov/everydaycounts/technology/grs_ibs/publications.cfm.]
- Prefabricated pier cofferdams
  Several methods for cofferdams have been developed, such as driven steel sheeting and framing systems combined with underwater tremie concrete. Prefabrication can be used to facilitate the casting of pile cap footings. Pier box forms have been developed that can be floated into position and hung from the piles or drilled shafts.
- Retaining walls
  There are various ABC retaining wall systems that can be used. One of the more common systems that have been available for some time is mechanically stabilized earth (MSE) walls.

Some ABC techniques for foundation elements that have particular application in Iowa include pile bents and drilled shafts. Pile bents in combination with precast bent caps may be a good fit for some ABC projects because the bents can be installed relatively quickly once the existing structure is demolished. In general, larger capacity piles are used in order to limit the number of piles required at each pile bent. Drilled shafts are particularly suitable for ABC projects if they can be installed before the road is closed and the existing structure is demolished. In general, drilled shafts are used over other foundations types because they have a small footprint and can support significant axial loads.

- Pile options for pile bent piers without encasement
  - Galvanized steel H-piles
    For shorter bridges over streams with minimal debris or ice flow, galvanized steel H-piles may be substituted for individually encased piles for pile bent piers. The substitution allows the contractor to drive the piles and place a precast concrete bent cap without having to form and pour the individual encasements.
  - Concrete-filled steel pipe pile or prestressed concrete pile
    For shorter bridges over streams with minimal debris or ice flow, it may be desirable to use concrete-filled steel pipe piles or prestressed concrete piles for a pile bent pier not requiring full encasement. Displacement piles may require considerably less length of pile than H-pile.
- Drilled shafts
  In some cases, drilled shaft foundations may be installed just outside the limits of the existing structure before the existing structure is removed and the road closed. Once the shafts are in place the road is closed and the existing structure removed which allows the rest of the substructure to be quickly constructed using precast elements. This ABC technique is

suitable when the existing structure is relatively narrow and the replacement structure is only moderately wider. The limiting factor for this technique may be the weight of the precast cap which typically must span and support the full width of the new bridge between two columns. The weight of the cap may be mitigated somewhat through the use of prestressing, post-tensioning, and voids.

8.3.2 Rapid embankment construction

Some ABC techniques for rapid embankment construction that have been used around the nation are briefly described below.

- Expanded Polystyrene (EPS) Geofoam – A lightweight (1-2 lbs/ft^3) embankment fill system comprised of large blocks of expanded polystyrene. EPS Geofoam is not intended to structurally support the bridge abutment but can eliminate or reduce the amount of pre-load settlement an abutment may have otherwise experienced. [For additional information see http://www.fhwa.dot.gov/engineering/geotech/improvement/.]
- Accelerated Embankment Preload Techniques – Stone columns or wick drains have been used to accelerate the removal of water from underlying clay soil layers to allow for consolidation.
- Column Supported Embankment Technique – A method of constructing an embankment over compressible soils that involves installation of closely spaced piles or stone columns through the compressible soils. Once in place, multiple layers of geosynthetic reinforced soils are placed over the columns to support the new embankment.

8.3.3 Prefabricated bridge elements and systems

Prefabricated Bridge Elements – The most common form of ABC involves connecting prefabricated elements at the site to form a bridge. The items below are not meant to be an exhaustive list, but only cover some of the more common ABC elements and considerations.

- Materials – A wide variety of materials with various benefits for different elements can be used in ABC projects. Particularly important are materials used in connections between precast concrete deck elements due to the significant potential for cracking followed by deterioration due to chloride infiltration. For connections careful consideration should be given to the use of corrosion resistant reinforcing steel, durable non-shrink grouts, self-consolidating concrete (SCC) and ultra-high performance concrete (UHPC). Additionally, UHPC is also able to achieve a full moment connection with smaller closure pours. A combination of quality materials with compressive stress due to post-tensioning can have a significant effect on increasing the longevity of decks.
- Beams – Prefabricated steel and concrete beams have been used for many years in traditional construction techniques. Prestressed concrete beams, rolled steel beams, and plate girders may be placed quickly as simple spans. Beam continuity for live load, which is beneficial for beam weight reduction and crack reduction in decks at the pier, can often still be achieved for accelerated projects. Adjacent butted precast beam systems consisting of double tees, deck bulb tees, box beams, etc., though not commonly used in Iowa, can be advantageous to ABC.
- Decks – Forming, placing reinforcement, pouring, curing, and stripping cast in-place decks is one of the more time-consuming aspects in bridge construction. There are a number of approaches to circumvent the lengthy traditional process. The more common approaches include stay-in-place (SIP) corrugated steel forms, partial-depth precast concrete deck panels, and full-depth precast concrete deck panels. BSB approval should be sought to use SIP forms and partial depth precast panels since they typically have been limited to rural highways with limited ADT counts (i.e. BDM 5.2.1.1 and 5.2.4.3).
- Modular superstructure elements – The main benefit of modular components is that the deck is already attached to the beams eliminating the need for grouted shear pockets which are common for full-depth precast deck panels. Modular systems are often limited to shorter spans around 100’ due to shipping limits and a maximum weight of 150 kips due to limited crane capacities. For this reason, lighter rolled steel beams tend to be more favorable for modular construction. Continuity for multi-span bridges is often accommodated with modular systems.
- Substructure pier elements – Caps, column, and footing (spread or pile supported) precast elements for open frame piers are typically joined using grouted sleeve reinforcing bar couplers.

The weight of these elements should be no larger than 150 kips. Prestressing, post-tensioning, and voids may be used to reduce weight. Prefabricated wall piers are not as common due to weight limitations. Pile bents, not requiring concrete pile encasement, but consisting of steel shell piles, prestressed piles, or galvanized steel H-piles and precast caps can often be quickly constructed.

- Abutment elements – Iowa prefers to use integral abutments whenever feasible. Integral abutments can generally make use of a precast cap for the beams to sit on, but would still typically require a closure pour for the connection between the beams and abutment. Semi-integral abutments also use a precast cap for the beams to rest on, but typically it is possible to attach the backwall to a superstructure modular unit thereby eliminating the closure pour. Precast wings can also be incorporated into the system, but will typically require a closure pour.
- Approach pavement – Precast approaches have been successfully used on a number of Iowa projects. In general, it is better to bridge the distance from the abutment notch to a sleeper slab rather than placing the precast element directly on the subgrade. The primary reason for this is the difficulty with compacting the subgrade so that the element sits firmly on it.
- Precast culverts and modular arches – These systems have been available for a number of years.

Prefabricated Bridge Systems – Major bridge portions may be prefabricated and moved into place. Typical placement methods are covered in the next article. These systems are ordinarily used for short duration, tier 1 or 2, road closures. Typical systems include:

- Complete superstructures
- Superstructures with integral piers
- Complete bridges

8.3.4 Structural placement methods

Structural placement of prefabricated bridge systems is often achieved by one of the following four methods.

- Self-Propelled Modular Transporters (SPMTs) – A set of high capacity, highly maneuverable transport trailers that can be connected transversely or longitudinally to carry and place entire bridge structures. SPMTs are often used when multiple structures are being replaced within a relatively short distance along a corridor. The individual structures may then be fabricated at one location, called a bridge farm, and then transported and installed at their final locations. [For additional information see AASHTO TIG SPMT webpage.]
- Longitudinal Launching – A bridge placement method that requires the bridge superstructure to be constructed in a launching pit behind one or both abutments and then moved into place by jacking longitudinally out over the spans. This method is often used over deep gorges, busy navigation channels, or in environmentally sensitive areas. [For additional information see “Bridge Construction Practices using Incremental Launching” at http://onlinepubs.trb.org/onlinepubs/archive/NotesDocs/20-07(229)_FR.pdf.]
- Horizontal Skidding or Sliding – A bridge system movement method that involves lateral sliding or skidding of the new or existing structure. The most common procedure requires the erection of the new bridge superstructure to take place parallel to the old bridge. Once complete, the old bridge is demolished, the new substructure is installed, and the new superstructure is slid or lifted into place. Another method may call for the substructure for the new bridge to be constructed under the old bridge, the old bridge slid out of the way, and the new bridge slid into place. Alternatively, a temporary alignment may be built, the existing bridge slid laterally onto temporary supports for the temporary alignment and the new structure built along the final alignment.
- Other Heavy Lifting Equipment and Methods:
    - Strand Jacks – A system that pulls elements up vertically using cables. This system is often used to place structures that are shipped in on barges.
    - Climbing Jacks – A system that pushes elements up vertically using hydraulic jacks.
    - Pivoting – A system that involves rotating the prefabricated bridge into place on vertical or transverse axis.
    - Transverse or Longitudinal Gantry Cranes

8.3.5 Fast track contracting

8.3.5.1 Accelerated project delivery

Traditional design-bid-build (DBB) methods require design and construction to take place sequentially. Accelerated project delivery (APD) methods generally allow design and construction to take place concurrently thereby requiring less time to complete a project. Additionally, the early involvement of a contractor allows the design to more readily take into account the most likely ABC construction techniques. APD methods are usually achieved by using one of the three methods below:

- Design-Build – A performance based bridge contracting method which allows final design and construction to occur simultaneously. In Design-Build, the owner relinquishes control of the design and construction process as well the risk associated. [For additional information see http://www.fhwa.dot.gov/construction/cqit/desbuild.cfm.]
- Partial Design-Build – A bridge contracting method which gives contractors enough guidance on bridge type, size, and location to competitively bid the project, but allows the Design-Builder to finish the design process while initial construction is performed.
- Construction Manager/General Contractor (CMGC) – A bridge contracting method similar to design build except for the owner's contracted involvement. In CMGC, the owner is part of the design team and does not relinquish control or risk. [For additional information see http://www.fhwa.dot.gov/construction/cqit/cm.cfm.]

Innovative contracting methods such as design build and CMGC, which are promoted by the Every Day Counts initiative, are not currently considered in Iowa.

8.3.5.2 Contracting provisions

There are number of contracting provisions that may be used on ABC projects.

- Best Value Selection – A selection process that combines a bid or quote with an evaluation of the contractor's proposal which typically includes credentials and experience. This contracting method is typical for design build or CMGC bridge projects.
- A+B and A+B+C Bidding – A+B or "price + time" bidding includes a base bid price (the "A" component) for the contracted work as well as a monetary value based on time to complete the project (the "B" component). The "B" component is often tied to road user costs. See IDOT SS 1112 for more information on A+B bidding in Iowa. A+B+C bidding will generally include monetary value associated with meeting important project milestones. Once again the value of the "B" and "C" components is often tied to road user costs. In general, the awarded amount for the contract is limited to the "A" component, but the best value is determined based on the sum of the components.
- Continuity of the Construction Process – Contracting provisions can be used to limit the amount of days a worksite is inactive. An example of this would be to limit the project construction to a certain number of workdays. Contractors are charged for workdays regardless of whether the construction site is active or not except when weather or outside causes are the source of the inactivity.
- Incentive/Disincentive (I/D) Clauses – A contract provision used to financially compensate or assess damages to a contractor for time spent on project construction. I/D clauses are typically tied to road user costs. A cap is often placed on the maximum incentive value. See Section 1111 of the Standard Specifications for more information on I/D bidding in Iowa. [For additional information see http://www.fhwa.dot.gov/construction/contracts/t508010.cfm.]
- Warranties – A time based guarantee typically used for specific project items such as concrete pavements, bridge painting, and bridge expansion joints. Warranties were not permitted on Federal-aid projects until 1995. Warranties are most often used on design build projects where owners have less control over the quality control procedures.
- Lane Rental – A contracting provision that involves charging the contractor for the amount of time a lane is out of service. This forces a contractor to be aware of roadway user impacts during construction and the bidding process.

8.4 Quality control

The IDOT Standard Specifications often specify construction tolerances for component dimensions and component placement. The tolerances in the Specifications may not be suitable for proper fit up between prefabricated bridge elements and placement of prefabricated bridge systems. Additionally, the Specifications may not address construction tolerances that are important to the successful implementation of a particular ABC technology.

For example, IDOT SS 2501.03.I and L specify construction tolerances for pile driving. However, an ABC project which makes use of precast bent caps supported on piles should specify tolerances for the final position of the pile heads in the plans. This will ensure the precast cap can be placed over the pile heads without interference. If pile tolerances are particularly tight consideration should also be given to requiring the use of a template in the plans in order to ensure proper pile positioning.

8.4.1 Certification

Reserved

8.4.2 Inspection

Reserved

8.5 Details

Reserved

8.6 Costs

Reserved

TABLE OF CONTENTS ~ BRIDGE AESTHETICS

9 Bridge Aesthetics
9.1 General
9.1.1 Policy overview
9.1.2 Design information
9.1.3 Definitions
9.1.4 Abbreviations and notation
9.1.5 References
9.2 Public Involvement
9.3 Establishment of an aesthetic project
9.3.1 Initiation by district office
9.3.2 Identification by Bridges and Structures Bureau
9.3.3 Projects involving signature and historic bridges
9.4 Aesthetic level classifications and cost guidelines
9.4.1 Level “D” bridges
9.4.2 Level “C” bridges
9.4.3 Level “B” bridges
9.4.4 Level “A” bridges
9.4.5 Cost
9.5 Aesthetic design guidelines
9.5.1 Aesthetic and context sensitive design
9.5.2 Context sensitive design/context sensitive solution
9.5.3 Basic aesthetic guidelines (preliminary and early final design)
9.5.3.1 Long, slender appearance
9.5.3.2 Equal and/or balanced span arrangement
9.5.3.3 Wide overhangs
9.5.3.4 Reduced column count for multiple-pier structures
9.5.3.5 Member sizes
9.5.3.6 Static vs. dynamic lines
9.5.3.7 Ornamentation
9.5.3.8 Individual structures
9.5.3.9 Multiple structures/corridors
9.5.3.10 Bridge widenings
9.5.3.11 Sidewalks and trails
9.5.4 Superstructure
9.5.4.1 Span to depth ratio
9.5.4.2 Girder bridges: steel and concrete
9.5.4.3 Span arrangement
9.5.4.4 Continuous structure lines
9.5.4.5 Haunched steel girders
9.5.5 Substructure
9.5.5.1 General
9.5.5.2 Pier shape
9.5.5.3 Pier formwork
9.5.5.4 Abutment shaping
9.5.5.5 Abutment forms
9.5.5.6 Substructure enhancement cost estimation
9.5.6 Barriers
9.5.7 Pedestrian and bicycle railing/fence
9.5.8 Special lighting on bridges
9.5.9 Decorative concrete
9.5.9.1 General
9.5.9.2 Articulation
9.5.9.3 Rustication
9.5.9.4 Form liner concrete texture

9.5.9.5 Integral thin veneer brick
9.5.9.6 Integral concrete color
9.5.9.7 White cement concrete
9.5.9.8 Post-casting surface treatments
9.5.9.8.1 Abrasive blast finishing
9.5.9.8.2 Rubbed concrete finish
9.5.9.8.3 Decorative prefabricated inserts
9.5.9.8.4 Broomed or raked slope protection
9.5.9.8.5 Acid etching and exposed aggregate
9.5.9.8.6 Concrete coatings
9.5.9.9 Other decorative concrete techniques
9.5.10 Coatings for structural concrete
9.5.10.1 Surface preparation for coating
9.5.10.2 Acceptable surfaces for painting
9.5.10.3 Coating material types, usage conditions, existing coatings
9.5.10.4 Specifying colors and finishes
9.5.10.5 Pedestrian tunnel interior coating
9.5.10.6 Anti-graffiti coating
9.5.10.7 Repainting
9.5.11 Coatings for steel railings
9.5.11.1 Galvanized-only railings
9.5.11.2 Duplex coating system specifications
9.5.11.3 Specifying colors and finishes
9.5.11.4 Specifying coating and color for chain link fences
9.5.11.5 Repairs of coated bridge railings
9.6 Aesthetic bridge design plan preparation
9.7 Continuing project management
9.8 Commentary on aesthetics and policy in the United States and Iowa

9 Bridge Aesthetics

9.1 General

Aesthetics is an important consideration in the design and construction of highway systems. The public's interest in promoting their local communities with aesthetics has grown over the years. In response, the Iowa Department of Transportation has taken a more proactive approach in designing structures that enhance or blend in with their environment. Because bridges play an important role in our visual environment, designers must be aware that bridge details have visual consequences. Additionally, addressing aesthetic considerations at the front end of the design process will produce a better result than adding them at the end.

Two states have taken the lead in bridge aesthetics and have prepared highly detailed design manuals. In 1993, the Maryland DOT released the "Aesthetic Bridges Users Guide". This guide and a similar one published by the Minnesota DOT in 1995 entitled "Aesthetic Guidelines for Bridge Design" present detailed information about the how, where, and when of aesthetic bridge design. The guides are good resources that illustrate how to determine proper structural form and proportions for bridges in both urban and rural settings.

9.1.1 Policy overview

Not all structures will warrant aesthetic details. District personnel will make the final determination of the extent of aesthetic enhancement for projects under their jurisdiction. Consultant designers shall contact the Bridge Aesthetics Coordinator at the Bridges and Structures Bureau for direction on the level of aesthetics required on a structure before beginning design.

When a structure has been identified for aesthetic treatments, the Bridges and Structures Bureau will recommend a level of treatment based on a percentage of the project costs that is acceptable to the District Office responsible for the project. Typically, aesthetic costs have been 1 to 7 percent of the overall bridge project costs depending on the visibility and special design requirements of the structure.

The Bridges and Structures Bureau will direct the application of all aesthetic bridge designs.

9.1.2 Design information

Reserved

9.1.3 Definitions

Articulation is the shaping of a bridge or bridge component.

Baseline refers to the appropriate least cost solution given normal project parameters.

Concrete Stain is a semi-opaque penetrating medium for coloring cured concrete.

Concrete Colored Sealer Coating is an opaque, high silicone content pigmentable sealer.

Concrete Integral Colorant is a coloring pigment added to concrete mix prior to placement.

Context refers to the physical, social, historical, economic and political environment.

Context Sensitive Design is a design process that acknowledges project constraints and design opportunities that go beyond the normal scope of project planning and development, including consideration of the social, environmental and cultural environments.

Form Liner is a foam, plastic or rubber form insert used to create texture.

Mitigation is an improvement intended to offset or alleviate negative project impacts.

Reveals refer to narrow and usually shallow rustication lines.

Rustication refers to shallow surface features in concrete, such as grooves and recesses.

Texturing refers to a varied concrete surface treatment over broad areas.

Theme is the basic design premise or principle applied to a group of elements.

9.1.4 Abbreviations and notation

BSB, Bridges and Structures Bureau
CSD/CSS, context sensitive design/context sensitive solutions
DB, Design Bureau
FHWA, Federal Highway Administration
Iowa DOT, Iowa Department of Transportation
LEB, Location and Environment Bureau
SHPO, state historical preservation office
TS&L, type, size, and location
VCF, Vehicle Collison Force (substructure design)

9.1.5 References

Committee on General Structures, Subcommittee on Bridge Aesthetics, Transportation Research Board (TRB) and the National Research Council. *Bridge Aesthetics Around the World*. Washington, 1991.

Iowa Department of Transportation, *Aesthetic Bridges Visual Reference Library*. Iowa: Bridges and Structures Bureau, Methods Unit, 2025. [Available by request.]

Maryland Department of Transportation. *Aesthetic Bridges Users Guide*. Maryland: State Highway Administration, Office of Bridge Development, 1993.

Minnesota Department of Transportation. *Aesthetic Guidelines for Bridge Design*. Minnesota: Bridges and Structures Bureau, 1995.

Transportation Research Record No. 1549, Design. *Transportation Aesthetics*. Washington: Transportation Research Board (TRB), National Research Council, 1996.

Bacow, A.F. and Kruckemeyer, K.E. *Bridge Design: Aesthetics and Developing Technologies*. Massachusetts: Department of Public Works, Council on the Arts and Humanities, 1986.

Gottemoeller, F. *"Bridgescape: The Art of Designing Bridges"*. John Wiley & Sons, 1998.

Federal Highway Administration (FHWA). *Flexibility in Highway Design*. Washington: 1997

Texas Transportation Institute Research Report 2113-3. *Guidelines for Aesthetic Design in Highway Corridors: Tools and Treatments for Texas Highways*. Texas: Texas Transportation Institute and the Texas Department of Transportation, 2001.

9.2 Public Involvement

When aesthetics are planned for a structure in or near a defined community, local community members are encouraged to participate in an aesthetics advisory group to aid the Iowa DOT in the course of aesthetic concept development. The Iowa DOT retains final decision-making authority on any aesthetic projects. Any questions about implementation of this policy shall be directed to the BSB.

The extent of public involvement is tied to the Aesthetic Level Classification of the project [BDM 9.4] and is managed by District Office staff. Aesthetic advisory groups should generally be formed for Level "A" and "B" bridges, may sometimes be appropriate for Level "C" bridges, but should not be used for Level "D" bridges. Except for significant corridor projects or for signature bridge projects, local community advisory or beautification groups should be limited to ten (10) non-DOT staff participants or fewer. District Office staff shall be relied upon to ensure that interested, representative individuals are offered the opportunity to participate in such groups.

Oftentimes, local public interest in a bridge construction project will generate the inclusion of aesthetic enhancement during the planning and budgeting process [BDM 9.3]. Evidence of this is usually found in the project description within the project envelope. (The project envelope contains a complete collection of project-related information and is kept in the BSB. Consultants may request copies of items from the project envelope for use as reference material. Consultants are advised to send pertinent information and correspondence regarding the project to the BSB for inclusion in the project envelope). On occasion the inclusion of aesthetic treatments can occur later in the process of developing plans for the project. In these cases, the designer is advised to make inquiries into the possibility that the project could eventually include enhancements. Consultant designers shall contact the BSB. In-house designers should contact the Bridge Aesthetics Coordinator or the Assistant District Engineer to confirm the intention of including aesthetic enhancements in the design plans. All correspondence regarding aesthetics in relation to the project should be entered into the project record by the designer.

Projects that include a public involvement component will often have a public process which may parallel the project's engineering design effort for a time. This will usually occur during the preliminary and early final design phases of the project. It is important for the designer to remember that there may be periodic approvals to be gained from a local advisory group. Certain milestones may be achieved, beyond which the designer may not be able to continue without first receiving word from District personnel that approvals have been granted for the current design concept. Design work may be held up for some time before being allowed to proceed. The designer shall avoid getting ahead of the public involvement review and approval process, since the risk of rework or redesign is increased.

9.3 Establishment of an aesthetic project

Only selected projects will receive aesthetic enhancement. There are several different ways by which a project is identified for enhancement. The following sub-articles list some typical examples of this process but should not be considered a complete list of the possible mechanisms for including aesthetics.

9.3.1 Initiation by district office

The initiation of an aesthetic project by the District office will be documented in the project description. This documentation can be found in the project envelope. When the addition of aesthetic enhancements occurs after the project description is written, the information governing the proposed enhancements may arrive in the BSB through other channels, such as directly from the District office to Bridges and

Structures Bureau office personnel. The designer shall consult with the Unit Leader to verify the inclusion of aesthetic enhancements before beginning any design work on the project.
District personnel will make the final determination of the extent of aesthetic enhancement for projects under their jurisdiction.

9.3.2 Identification by Bridges and Structures Bureau

In some cases, the designer or other personnel in the BSB may propose that a project be considered for aesthetic enhancement. This can occur when it becomes apparent to BSB personnel that the project is likely to attract significant public attention or is subject to the parameters established by the Aesthetic Level Classification system used by BSB [BDM 9.4].

Even a type, size and location (TS&L) plan can present clues to the designer that a project may be a candidate for enhancements. The bridge's location in or near an urban area would be readily apparent in the information provided on the TS&L and may indicate that aesthetics could be warranted. A field exam may raise the preliminary bridge designer's awareness of important indicators immediate to the project site, such as unique contextual issues [BDM 9.5.1 and 9.5.2].

The District office should be contacted as soon as possible after the project has been identified by BSB as a candidate for aesthetic treatment. District personnel will make the final determination of the extent of aesthetic enhancement for projects under their jurisdiction.

9.3.3 Projects involving signature and historic bridges

In most cases, replacement or rehabilitation of a signature or historic bridge will result in some consideration of aesthetic or other enhancement of the new bridge. A "signature" bridge could include any bridge with a unique structure type, either in an urban or non-urban area. Regardless of whether an historic bridge is listed on the National Register of Historic Places/Structures, its replacement will likely draw attention from public citizens or groups concerned about its loss. Bridges listed on the Historic Register will need to be addressed by the Location and Environment Bureau (LEB), which will make the necessary contacts of personnel at the State Historical Preservation Office (SHPO). Keep in mind that aesthetic enhancements can become important contributions to mitigate the loss of the historic structure.

9.4 Aesthetic level classifications and cost guidelines

Although all bridges deserve a minimum level of aesthetic consideration, some structures will warrant additional attention. Our Bureau has developed a classification system, designed to relate the visibility and importance of a structure to an appropriate level and cost of aesthetic enhancement.
Bridges will be classified into one of four enhancement categories: A, B, C, or D level bridges.

9.4.1 Level "D" bridges

Level "D" bridges are designated as lower visibility structures. For example, this category includes rural bridges over ditches or small streams. Because of their lower visibility, the need for aesthetic details may be limited, as may be the budgetary commitment made to fund any included enhancements. There will typically be no public involvement in the design of Level "D" bridges.

9.4.2 Level "C" bridges

Level "C" bridges may include typical overhead standard bridges and the need for aesthetic details shall be determined on a case-by-case basis by the District Office. Project budget increases for enhancements in this category will generally be between 1 and 3 percent of bridge construction costs. There will typically be little or no public involvement in the design of Level "C" bridges except at the discretion of the District Office.

Figure 9.4.2. Level "C" bridge examples in Iowa

Consultants shall contact the Bridge Aesthetics Coordinator at the BSB for direction on aesthetic design details to be included in the design plans.

9.4.3 Level "B" bridges

Level "B" bridges may include bridges located in or near urban environments, along heavily traveled corridors, in resort/recreation areas, and in commercial areas where there is a high degree of exposure and/or there have been public requests for enhancements. Many of these bridges will be considered "community gateways" by the local municipality. Project budget increases for enhancements in this category will generally range from 3 to 5 percent of anticipated bridge construction costs. The usual estimated target increase for aesthetics in this category is 5 percent of overall bridge cost.

If aesthetic details are to be incorporated, then public involvement considerations will likely need to be considered early in the planning process if there is enough public interest. Public involvement may continue into the preliminary design phase in some cases.

Figure 9.4.3. Level "B" bridge examples in Iowa

Level "B" bridges will always be considered for additional aesthetic details. Occasionally, it will be appropriate to use an existing design precedent as a starting point for the development of aesthetic concepts. Nevertheless, it is likely that the development of new, unique details will be required. Consultants shall contact the Bridge Aesthetics Coordinator at the BSB for direction on aesthetic design details to be included in the design plans.

9.4.4 Level "A" bridges

Level "A" structures include bridges with unique structure types, some major river crossings or other highly visible structures, and any historic bridge replacement project. Structures may also be designated as Level "A" when they are located in specific portions of interstate corridors such as I-74 in the Quad cities or I-235 in Des Moines.

Examples of level "A" bridges are the Des Moines River bridge at Keosauqua, the US 65 bridge over the Iowa River in Iowa Falls, the pedestrian bridges over I-235 and the unique Lake Okoboji Bridge in northwest Iowa. Virtually any pedestrian-only or bicycle trail bridge within or near a community should be considered a Level "A" structure. Project budget increases for enhancements in this category will generally be between 5 and 10 percent of anticipated bridge construction costs. The 10 percent figure should generally be seen as an upper limit to DOT enhancement expenditure, beyond which the enhancement cost is considered exceptionally disproportionate to the benefits gained. Cost participation through official agreement with the local municipality may be needed to reach or increase the maximum enhancement percentage.

Figure 9.4.4. Level "A" bridge examples in Iowa

There will likely be significant public involvement both early in the planning phase and throughout the preliminary design phase. Several review meetings with a community advisory group are also likely to occur, with the expectation that feedback and input received will noticeably affect the course of the project's design.

Level "A" bridges will always be considered for additional aesthetic details. Development of unique features and details is very likely to be required for Level "A" bridges. Consultants shall contact the Bridge Aesthetics Coordinator at the BSB for direction on aesthetic design details that will be developed and included in the design plans.

Unique long-span "signature" structures often have extenuating circumstances when it comes to basic structure cost and the establishment of exactly what features are classified as enhancements. Examples include the I-74 Mississippi River bridge in the Quad Cities and the IA 9 Mississippi River bridge at Lansing. These projects are heavily scrutinized for cost on a case-by-case basis, and often involve comparisons between limited alternatives that may have inherent aesthetic value that is difficult to quantify in the same terms as enhancements applied to basic short- and medium-span structures.

9.4.5 Cost

Enhancement cost is figured as a percentage of structure construction costs beyond what is necessary to build a bridge that meets the project requirements in terms of roadway geometry, structural capacity and other functional needs. Include cost premiums for identifiable bid items within the plans using baseline cost averages based on past bids for items where applicable. Also include the cost for the additional concrete necessary to create unusual substructure shapes and other features absent in a standard bridge meeting the project's functional requirements. Do not include special or unusual cost items such as staging cost increases in the basic bridge cost estimate, as these items will artificially decrease the cost of the enhancements when figured as a percentage of bridge cost. Non-construction costs like Right of Way costs should also never be included in percentage cost estimates of project enhancements. Generally, a prestressed beam type bridge with standard barriers and railings will be considered the basis for

estimating the cost of a conventional or baseline bridge. If Vehicle Collision Force (VCF) design is not required for piers, a standard multi-column frame pier should be considered the baseline pier shape. If VCF design is required, a standard Tee pier or, if viable, a frame pier with crash wall shall be considered the baseline pier shape. See BDM 9.5.5.6 for more detailed information regarding substructure enhancement cost estimates.

Exceptions should be made in the case of replacements of existing bridges that have unique features. Unusual or unique features on such bridges will, in most cases, increase the baseline bridge cost estimate for the replacement. For example, when replacing an existing bridge which has a painted steel picket railing, a chain link fence should not be used as a baseline pedestrian railing cost item.
When a local community requests project enhancements that go beyond the Iowa DOT's budgetary commitments to the enhancements, a cost participation agreement may be executed for the local government to pay the excess costs. In such cases the District will initiate agreements with the appropriate local government agencies. These agreements can be used for aesthetic treatments such as city street lighting, shared use path lighting, and other shared use path features such as benches or overlooks, aesthetic railings, and community identity features. The Iowa DOT may also assist the local municipality in locating other funding sources for the enhancements. District personnel will make the final determination of the acceptable cost of aesthetic enhancement for projects under their jurisdiction.

9.5 Aesthetic design guidelines

9.5.1 Aesthetic and context sensitive design

The final built form of an aesthetic bridge may be determined by an overriding design concept, theme or organizing idea. The background principles affecting the design of the various components of the bridge will likely be different for each unique bridge location. It is therefore impossible to enumerate all the possible concepts or themes in this manual, as they are unlimited in number and description. It is possible, however, to list some of the likely influences that may help to establish the design concept for the project. A thorough investigation into each of these influences is a task that can prove rewarding for virtually any project, regardless of its location. This is also a task that can be made much easier by relying on local participants for their uniquely regional insight.
Some possible influences on design concept/theme include:

- Architectural context
- Historical context or events
- Natural environment
- Geographic location
- Existing aesthetic guidelines for interstate corridors
- Nearby infrastructure
- Presence of pedestrians
- Viewing opportunities (or lack thereof)
- Community identity and/or goals
- Tourism opportunities
- Commercial interests
- Future development planned

9.5.2 Context sensitive design/context sensitive solution

The surroundings of the bridge should be taken into thorough account before attempting to incorporate any kind of enhancement treatment into the design. The general character of the surroundings - scenic, rural, semi-urban, urban - are a good starting point. The aesthetic treatment of an urban bridge will usually be quite different from that of a rural structure. The number and position of potential observers of the bridge is a related area of inquiry that can begin to inform the designer about the kinds of treatments that can be effective once built. If the bridge is built over a roadway, the speed of traffic will be an important factor in determining which enhancements are appropriate. For example, color can have great effect for both slow- and fast-moving traffic, but fine rustication or texturing of concrete surfaces may be

lost on the freeway motorist and may be more effectively employed on bridges observed by slow-moving traffic and pedestrians.

Consult the References article [BDM 9.1.5] for more information and guidance about the analysis of project context.

“Placemaking” is a term used by architects and urban designers to describe the effort to make a memorable place within an urban landscape. Bridges in both urban and rural settings can aspire to establish a sense of place in the same way as a building, a public art installation, a park or an urban square. Place can be established through special accommodation of pedestrian or bicycle traffic, and then incorporating design elements that only those slow-moving observers can fully appreciate. It can be done through architectural manipulation of the piers, abutments and railings of the structure to create a unique vision that reflects the aspirations of the community. It can also be done by making great effort to fit the structure into its immediate context, blending it seamlessly with surrounding streetscape or thoroughfare. One cannot create a sense of place by ignoring the context and designing a standard bridge, or even a standard aesthetic bridge. Aesthetic design should not be begun without thought about where the bridge is to be built, what is nearby, and who will use and observe it upon its completion.

9.5.3 Basic aesthetic guidelines (preliminary and early final design)

There are some features of visually pleasing bridge structures that have been repeatedly identified by numerous publications on bridge aesthetics. The following are discussions of each but should not be considered complete documentation of the subject matter. The References article [BDM 9.1.5] contains several good sources of detailed information on these topics.

9.5.3.1 Long, slender appearance

It is almost always best to enhance the appearance of the basic bridge structure by ensuring that its details allow for the longest and most slender appearance. This can be achieved through careful span arrangement, reduction in the number of supports, maximizing the distance between supports, and using the shallowest beam possible for the span. The designer may even consider using shorter barriers, when allowed.

Changes in depths of beams on adjacent spans should be avoided, when possible. Concrete bridges should employ the same depth of beam for all spans. Steel bridges should be carefully designed so that changes in girder depth are logical in appearance, and haunched depth changes should generally be favored over abrupt changes in girder depth.

See BDM 9.5.4.1 for a discussion of recommended span to depth ratio targets. Keep in mind that structural guidelines and available beam depths may ultimately control superstructure depth.

Note in Figure 9.5.3.1 how the extension of slab lines through the wing, rustication on the barrier, and elimination of the pier end diaphragm help the bridge to appear longer.

Figure 9.5.3.1. Bridges with long, slender appearance

Horizontal lines of structure should be made continuous or to appear continuous. Details that break the superstructure's long horizontal lines - such as pier end diaphragms - should be avoided. Carrying the slab edge lines through the abutment wing extension and wing is another effective technique toward maximizing the bridge's apparent length.

9.5.3.2 Equal and/or balanced span arrangement

When laying out a structure's span arrangement, it is important to consider the overall visual effect of the spans, and to avoid thinking only about each span individually without regard to the whole.
When a single structure contains spans of different lengths, care should be taken to achieve symmetry in the elevation of the bridge if it is to be viewed from below. If symmetry is not achievable, the layout should be studied carefully for other logical organizing principles. Visual balance can be achieved in an asymmetrical span arrangement. Consult References [BDM 9.1.5] for more detailed information on asymmetrical and other atypical span layouts.

9.5.3.3 Wide overhangs

Wide overhangs cast deep shadows on bridge beams, which can exaggerate the apparent slenderness of the structure. A 3'-0 slab overhang dimension (from the centerline of fascia beam to edge of slab) should be considered a minimum.

9.5.3.4 Reduced column count for multiple-pier structures

Unless the column count is somehow dictated by the pier's aesthetic design concept, it is generally best to design piers with the least number of columns. T-pier or wall pier configurations may be considered on some over-land bridges with multiple spans, to decrease the total column count.
Figure 9.5.3.4 illustrates how T-piers may be used to reduce total column count on a ramp interchange.

Figure 9.5.3.4. Bridges with minimal column count

9.5.3.5 Member sizes

On some structures, it is advisable to use larger, thicker members where the forces are the greatest and thinner elsewhere. Proper proportioning of pier columns to span depth is also an important consideration. Consult the References article [BDM 9.1.5] for more detailed information.

9.5.3.6 Static vs. dynamic lines

Straight, plumb vertical lines, such as those at piers and abutment faces and mask walls, generally convey a static image. Sloping or angled verticals can generate a more dynamic appearance in the bridge. Mask walls in particular, can serve to lengthen or decrease the apparent length of the bridge, depending on which direction they are angled (e.g. toward or away from the span). Be careful to include enough slope so that the observer is convinced that the slope was intentional, not merely a mistake by the builder. A minimum of 10 degrees is a good starting point.
Figure 9.5.3.6 demonstrates how a sloping mask wall can create a dynamic appearance.

Figure 9.5.3.6. Bridge with sloping mask wall

9.5.3.7 Ornamentation

It is always best to try to find ways of enhancing the necessary components of the bridge, rather than bolting on aesthetic treatments at the end.

Figure 9.5.3.7-1 display bridge examples with ineffective bolt-on aesthetic details. Figure 9.5.3.7-2 gives examples of complementary bolt-on aesthetic details.

Figure 9.5.3.7-1. Bridges with ineffective bolt-on aesthetic details

Some elements, such as railings or fences, do create fine opportunities for enhancements that can be built off-site and installed to complete the appearance of the bridge. In general, however, a bridge's appearance is not greatly enhanced by the addition of an extravagant railing or other add-on. The entire structure must be thought of as a visual composition, incomplete without any of its parts. The designer should attempt to articulate, rather than merely ornament, the bridge's necessary components to create that composition. The shaping of piers, abutments, barriers, etc. will be more effective in creating architectural character than can be achieved by most bolted-on details.

Figure 9.5.3.7-2. Bridges with complementary bolt-on aesthetic details

9.5.3.8 Individual structures

The designer should be advised that single structures that have been identified for aesthetic enhancement in or near communities may be seen as community gateways by the local residents and municipal leaders. This may bring the following considerations into play:

- Local constituents may seek to have the bridge express community identity through its design, including through its basic shape, colors, or through the addition of signage or emblems.
- There may be other enhancements planned for the area surrounding the bridge, which may be a freeway interchange or part of a city streetscape. Improvements may include landscaping, signage, special paving, ornamental street lighting, artwork, trails, or other amenities. The design of the bridge should be coordinated with the characteristics of these adjacent features. The color scheme associated with surrounding work will be of particular importance if the bridge will include any colored coatings for steel or concrete components.

9.5.3.9 Multiple structures/corridors

If there are multiple aesthetic structures within the same area or corridor, a unified design theme is strongly advised. This is especially applicable to new bypasses and renovations of existing freeway corridors. Sometimes new underpass structures or other amenities are located near an aesthetic bridge, and it may be appropriate to develop aesthetic treatments for them that match or complement treatments used on the bridge.

The designer should become familiar with any aesthetic theme that has already been established and ensure its applicability to the structure being designed. Adjustments of the concept may have to be made at individual sites due to differing functional design parameters, but the theme chosen for the grouping must be translated effectively at each structure. Likewise, if the designer is working an aesthetic theme

into the first of several affected structures, he/she should become familiar with all the structures to be enhanced by the aesthetic theme. This will help to ensure that all structures are able to accommodate the concept in a reasonable way and prevent single structures from deviating unacceptably from the theme.

9.5.3.10 Bridge widenings

Bridge widening projects rarely include aesthetic enhancement unless the existing structure has unusual and identifiable characteristics that can be carried into the new addition. When exceptions occur, it should be generally understood that, due to the typically lower overall costs of such projects relative to total bridge deck area, the enhancement cost premium can be higher than for a completely new bridge. If the work planned for the existing structure is more substantial, for example replacing the entire bridge deck, then the enhancement percentage could be in compliance with the usual cost guidelines.

Figure 9.5.3.10 is a widened bridge with work that included existing pier repairs, replacement of the entire bridge deck and existing slope protection. Note in the figure how the new pier shape was derived from the existing pier shape.

Figure 9.5.3.10. Example of handling aesthetics on a bridge widening

9.5.3.11 Sidewalks and trails

Sidewalks or trail accommodations on bridges invariably bring requirements for pedestrian fences or railings. Standard chain link fence will almost never fulfill the aesthetic vision for an enhanced project. The final railing or fence appearing in the plan for an aesthetic bridge will usually be of a custom design with significant complexity in its detailing and construction.

By the nature of the inclusion of sidewalks, the bridge and the physical execution of its component parts will be assumed to be under greater visual scrutiny. Slow-moving pedestrians and bicyclists have the opportunity to stop and linger. Details (and oversights) that are invisible to the freeway motorist come plainly into view for these observers. The designer should keep this in mind while assembling the parts of the bridge, including custom fences or railings, abutment features, concrete barriers, trail paving, and even piers.

Figure 9.5.3.11 contains some examples of aesthetics that are easily viewed by pedestrians and are therefore subject to more visual scrutiny.

Figure 9.5.3.11. Example of handling sidewalks and trails on bridges

The designer should be well-versed in the specification requirements that are in effect when pedestrian and/or bicycle accommodations are part of the project. See BDM 9.5.6 and 9.5.7 for further information.

9.5.4 Superstructure

9.5.4.1 Span to depth ratio

A span to depth ratio of 30 or higher is considered excellent; between 20 and 30 is considered good; 15 to 20 is acceptable, though not ideal; under 15 is undesirable, except in short end spans of bridges with constant beam depths for all spans. Keep in mind that structural guidelines and available beam depths may ultimately control superstructure depth.

9.5.4.2 Girder bridges: steel and concrete

Many bridges can be aesthetically successful with either concrete beams or steel girders. The Iowa DOT's BT series beams exhibit desirable span to depth ratios and yield a highly articulated fascia surface with strong shadow lines. If desired, concrete beams can be coated with pigmented stains or sealers to differentiate them from other surfaces on the bridge elevation, which can exaggerate the horizontal lines of the bridge and increase the appearance of slenderness. Concrete beam depth should remain consistent throughout contiguous spans, if possible.

Because of the opportunity to add color to a bridge without the use of coatings by employing weathering steel, steel can be a more aesthetic choice for a girder bridge. However, it is important to gauge the opinion of interested public groups relative to the subjective aesthetic qualities of weathering steel. Some constituents have expressed negative views of weathering steel's visual characteristics, especially during the initial period after installation when areas of contrasting color or construction-related staining may be present.

Higher span to depth ratios can also be achieved with steel, which is aesthetically desirable. Steel also allows haunched and curved girders, which can lend intrinsic aesthetic quality to the structure.
Steel girder bridges are generally considered to have higher cost per square unit deck area. In many cases, the final choice of girder type is driven by this cost assumption. However, consideration should be given to the associated reduction in substructure component costs when longer steel girders are used. When fewer piers are required, as is the case in some steel girder span layouts, cost differences with a normal concrete beam bridge may be significantly reduced. This is especially important when the conditions make the construction of piers more expensive than average, as is the case when building in a difficult river environment.
For horizontally curved bridges, steel will almost always be aesthetically preferable. Chorded concrete beam bridges yield undesirable results due to their varying soffit widths, inconsistent shadows cast on the fascia beam, and their generally stilted appearance. Pier end diaphragms are often impossible to eliminate, which results in broken or discontinuous superstructure lines.

9.5.4.3 Span arrangement

Refer to BDM 9.5.3.2 of this manual for specific recommendations on span arrangement.

9.5.4.4 Continuous structure lines

Horizontal lines of structure should be made continuous or to appear continuous. Details that break the superstructure's long horizontal lines - such as pier end diaphragms - should be avoided. Carrying the slab edge lines through the abutment wing extension and wing is another technique effective in maximizing the bridge's apparent length.

9.5.4.5 Haunched steel girders

Care should be taken in configuring the precise geometry of haunched girders. Haunches should always be formed by smooth curves, never by straight lines. The length of the haunched section of the girder should be neither too long (which may eliminate any sense of curvature in the haunch) nor too short (which can lead to poor visual proportions). Generally, haunches that reach a third of the span are considered superior, but in some cases the haunch may extend over the entire span. The depth of the haunch should be between 1.3X and 2X the mid-span girder depth. Consult References [BDM 9.1.5] for more detailed information.

9.5.5 Substructure

9.5.5.1 General

Design continuity between pier and abutment wing concrete shaping and surface treatments typically yields visual success in terms of making the whole bridge convey a consistent theme. Concrete shaping, color, rustication, and texture consistencies can help create a unified composition. Implications on formwork and concrete cost must be considered when developing aesthetic design features.
While some bridges will include aesthetic features throughout their construction, i.e. at piers, abutments, barriers, fencing, and even fascia beams, other bridges have limited need for substructure aesthetics due to a lack of vantage points. For example, a bridge may carry a high-volume roadway and a pedestrian facility that indicates aesthetic design features are warranted in the roadway barriers, bicycle railings, and fencing. However, if there are no significant views of the substructure from public areas surrounding the bridge, and there are no roadways or trails underneath (e.g. a typical stream crossing), there is little reason to incorporate substructure aesthetic features. Standard substructure may be the prudent choice. If necessary, contact the Bridge Aesthetics Coordinator for guidance.

The extent of substructure aesthetic treatment will greatly depend on the visual exposure of the bridge and its prominence in the landscape or community. Budgeting established for project aesthetic enhancements will also directly affect decision-making related to aesthetic design choices.

9.5.5.2 Pier shape

The multicolumn frame pier is usually the most economical solution for grade separation bridges. However, minor adjustments may be necessary to improve aesthetics or to better fit an established visual theme. The pier cap cantilever may be eliminated in some circumstances if they are aesthetically undesirable. Additional columns beyond the minimum required for a typical frame pier will often be necessary if this choice is made. It is generally unwise to add columns beyond what is necessary to eliminate cap cantilevers, since additional foundation elements are required for each additional column.

Some grade separation bridge piers require Vehicle Collison Force (VCF) design in accordance with BDM 3.7.4. There may be aesthetic benefits when using a wall pier, T-pier, or a T-pier hybrid shape to meet collision force design requirements. Larger surface areas parallel to mainline or other high volume roadway traffic beneath the bridge may represent excellent opportunities for aesthetic surface treatments. Custom concrete shaping may also be an option when unique pier types such as a “capless” T-pier hybrid shape are explored.

Figure 9.5.5.2-1 shows 2 examples of pier shapes chosen to meet VCF requirements and project aesthetic goals.

Figure 9.5.5.2-1. Examples of enhanced pier shapes that meet collision force requirements

Refer to BDM 6.6 for general pier configuration recommendations and requirements, including cantilever length, outermost bearing locations, and overall geometry. It is recommended that these characteristics either be retained or be changed only with caution and rigorous analysis.
Proposed pier shape manipulations must be carefully studied for their implications on concrete forms and costs. Rectilinear shapes will almost always be more constructable and less expensive. Concrete shapes with curved or reverse-curved features beyond those that can be created with standard bullnose-type forms or adjustable-radius steel forms can be expensive due to high custom (typically steel) form costs. Sometimes curves can be created with shallow recesses and texture or color accents on otherwise rectilinear pier shapes for better economy while still conveying aesthetic themes that rely on curves.

When it comes to pier count and the level of detail proposed, there are some additional architectural design factors to keep in mind. Bridges with many piers will usually be more successful if a more simplified pier design is employed, since there are architectonic benefits from a repeated form that can outweigh a perceived lack of architectural detail in the individual unit. Oversaturation of detail in piers that are repeated many times within the same viewshed can be detrimental to the overall perception of the design and may result in a visually overwhelming or cluttered appearance. Careful study using 3-dimensional modeling and rendered views from various vantage points is recommended to ensure that the level of detail is appropriate for the number of piers involved.

Additional features can be considered as extensions of a typical pier shape. A pier outer column vertical projection or tower that extends above the deck is one example. Cap-supported mask wall elements that extend only to the bottom of bridge deck (as a way of hiding a pier diaphragm or expansion joint) are also possible. A horizontal construction joint at the top of pier cap will help maintain constructability of these features. Keep in mind the consequences that additional dead load from such features may have on the pier’s foundation design.

Figure 9.5.5.2-2. Examples of pier cap-supported aesthetic elements

Piers on some past projects have included secondary concrete pours to create extended surfaces at the base of columns or pier stems. Columns have been enhanced in this manner by creating a “plinth” with more articulation than would be appropriate to include as part of the column concrete pour. When this sort of design feature is used, show a construction joint at the basic column or stem’s vertical limits (as if there were no extended features), and incorporate embedded or drilled-in dowels to engage with the additional layers of reinforcing necessary for the extended surfaces. If a horizontal construction joint is also allowed at the top of the column “plinth” or other column shape extension, a contractor may prefer to pour the feature integrally with the column or stem base, then form and pour the remaining column above that point. These detailing efforts will ensure maximum constructability of these features.

Figure 9.5.5.2-3 shows examples of piers with extensions near the base of the column or stem.

Figure 9.5.5.2-3. Examples of pier column or stem “plinths” or extensions

Piers with horizontal construction joints and stage-constructed piers that have aesthetic features can be a particular challenge if construction joints interrupt pier shape or surface treatments. Additional notes controlling the desired result are often necessary to ensure that construction joints don’t have a permanent negative effect on pier aesthetics. The use of rustication, textures, and post-applied coatings can alleviate some of the concerns of splitting pier construction into 2 or more parts, but continuity of surface treatments across both vertical stage construction joints and other allowable horizontal

construction joints must be carefully maintained. Post-applied aesthetic coatings can reliably hide concrete color and texture changes that can occur across construction joints, but the desired results must often be specifically detailed in the plans to ensure a satisfactory outcome in the concrete work.

9.5.5.3 Pier formwork

When articulating concrete or impacting finished surfaces with rustication and liners, always keep implications on formwork in mind, and engage Construction and Materials Bureau staff as appropriate when it comes to proposals that significantly impact formwork, especially custom components that must be made of steel. Custom formwork is more easily justified if the re-use potential is high, both on individual bridges with many piers and on corridors containing multiple bridge construction projects that will employ the same pier design.

Sometimes it is considered appropriate to reach out to potential contractors during the design phase on questions of custom formwork. This can typically be done most efficiently through the Iowa DOT's contacts at the Iowa Association of General Contractors (Iowa AGC). Minor formwork implications that can be solved using sheet products, milled urethane foam, hotwire-cut expanded polystyrene (EPS) foam inserts, plastic rustication strips and panels, or other available means are less concerning from a constructability standpoint and do not require investigation prior to project letting. Formwork material requirements such as steel, Medium-Density Overlaid (MDO) or High-Density Overlaid (HDO) plywood can be desirable when the as-cast finish of the concrete is especially important to aesthetic success. The use of steel forms for all pier forming work on a project can sometimes be justified by the pier shape and by formwork stability requirements during concrete pouring operations (e.g. a delta pier poured initially as freestanding columns with a separate cap pour). Generally, it is best to leave formwork material and construction choices up to contractors and to specify only the required results.

Figure 9.5.5.3-1 includes examples of special formwork used to create certain pier shapes.

Figure 9.5.5.3-1. Examples of formwork used to create special pier shapes

Reconditioning of steel forms, including weld metal filling of drilled holes and removal of welded steel rustication strips, is known to be expensive for contractors whether they own their steel forms or rent them from a supplier. Whenever possible, plan the work such that forms may be reused within the project from pier to pier, or from bridge to bridge within a corridor, to help limit the potential reconditioning costs. For specially-shaped piers, especially those with sloped or curved limits in the columns or stems and those with open voids, maintaining continuity of shape typically involves keeping the same geometry from the top of pier down. This means piers of differing heights do not have unique geometry throughout their configuration but can be extended or shortened as necessary at their lower region above the footing, which can minimize the need for custom form components. To ensure forming continuity, plan the pier shape around the tallest and shortest instances to be constructed within a project before establishing final, consistent geometry. For piers with delta (aka "V-pier" or "Y-pier") or similar shapes, it is best to incorporate a vertical stem at the base which can be easily extended or shortened as necessary using standard forming techniques, thus simplifying the forming of different height piers of the same basic shape. When steel forms are prescribed or are likely to be used, keep in mind the available heights of

standard plate girder-type forms, which typically come in 1-foot increments. Bridges with varying width or variable superelevation will require additional studies and investigations into forming implications related to an aesthetic pier shape.

Pier surface features that can be created by shallow inserts or sheet products such as plywood are generally easily constructed and do not need special review by contractors prior to final plan preparation. Such features may be kept consistent from pier to pier or bridge to bridge, but if proportional changes are appropriate to the aesthetic design for individual piers, there is no reason to avoid changes that only impact the configuration of shallow formwork inserts. When articulating pier surfaces, follow general recommendations for a maximum of 4 inches of unreinforced concrete. This limits surface articulation to a maximum of 2 inches in most cases. Exceeding 2 inches of articulation will trigger an additional layer of reinforcing for all projected surface elements.

Rustications can be included on round columns, if desired. Strips used for concentric reveals must be flexible enough to precisely follow the radius, but this type of material is readily available to contractors through third-party suppliers. Vertical rustications on round columns may have implications on stripping of forms, and the construction of the form should be kept in mind, i.e. how many pieces (typically 2 or 4) that make up the full cylindrical shape at the size needed. When appropriate, reiterate the note found within the General Notes for Concrete Rustication that specifies rustication strips shall remain in place during stripping of the main forms. This allows concrete to further cure and avoid damage to rustication corners when the strips are removed. This requirement may mean the strips must be attached through the back of the form with screws or nails that can be pulled out prior to column form removal. Attachment with some kind of adhesive that will release the strips from the form may also be possible.

Figure 9.5.5.3-2. Examples of concentric and vertical rustications on rounded pier columns

9.5.5.4 Abutment shaping

Abutment mask walls and wing wall surface treatments are typically used to support an aesthetic theme. Mask walls may significantly extend beyond the front face of abutment, typically by overlapping the abutment footing and extending several feet in front of the footing. Do not risk exposure of the bottom of this extended mask wall from future grade settlement by extending it too far. A maximum distance of 2.5 feet in front of the footing is recommended.

Mask walls may also angle or curve outward in the direction of the span while remaining independent of the bridge deck, thus creating a cantilever. Mask wall cantilever length and subsequent load must not adversely affect abutment performance. Mask walls on a traditional integral or stub abutment are typically separated from the bridge deck via 1-inch preformed joint material along a horizontal joint at the bottom of deck and are typically formed and poured ahead of the deck and abutment diaphragm. Mask walls of a semi-integral abutment are typically located entirely outside the edge of deck and are separated from the deck by a vertical joint along the deck edge. These minor differences in abutment configuration can result in slightly different overall appearance and can influence aesthetic decision-making.

Because of the longstanding standard method of constructing an abutment in separate concrete pour segments, i.e. footing, diaphragm and wing extension, wing, and mask wall, there are impediments to design and construction of aesthetic wingwalls that are unencumbered by construction joints. Depending

on the desired outcome of a design, consideration should be given to changing or reconfiguring the pouring sequence. Elimination of vertical joints is often desirable for the exposed wing, wing extension, and mask wall to appear as one unit and to avoid problems associated with form alignment and surface continuity from one pour to the next. Jointless wingwall construction is especially desirable when textured form liners or integral thin veneer brick surface treatments are included on the exposed faces. With an integral abutment, this approach often means separating the abutment diaphragm concrete from the wing area by means of a transverse vertical construction joint that is hidden behind the wing where the diaphragm meets the wing outward of the fascia beam. Since the deck and diaphragm are poured concurrently, the deck must also be separated from the wing at a line corresponding to the abutment front face. Reconfigure pour joints as necessary to preserve constructability while supporting aesthetic goals. Sometimes it may be appropriate to develop a unique approach to separating the wingwall/mask wall pour from other abutment construction to achieve the desired result. Make clear through extra notes near the abutment wingwall details that no construction joints (other than those shown) are allowed.

Figure 9.5.5.4-1 shows examples of abutment wing walls configured without any vertical construction joints for best appearance.

Figure 9.5.5.4-1. Examples of abutment wingwalls with no exposed vertical construction joints

When articulating abutment surfaces, follow the general recommendation for a maximum of 4 inches of unreinforced concrete. This limits surface articulation to a maximum of 2 inches in most cases. Exceeding 2 inches of articulation will trigger an additional layer of reinforcing for all projected surface elements.

Vertical features such as small towers, monuments, etc. may be included as part of abutment construction or nearby on separate foundations. The decision of whether to support them on an extension of the abutment footing or on a separate foundation may rest on the implications to abutment performance. Additional heavy loads on the abutment footing or inclusion of supplementary footings must not negatively impact the performance of the bridge abutment nor impede maintenance of the bridge. Additionally, truck layover concerns at the bridge traffic barrier typically dictate a minimum offset of 3’-3” from the top traffic face corner of the bridge barrier to any obstructions, including those mounted on or near the abutment and that extend above the height of the barrier. Additional foundation piles will often be necessary to support special abutment monuments, especially those that fall outside the normal limits of a standard abutment footing and footing extension.

Figure 9.5.5.4-2 shows examples of aesthetic features supported on extended footings or on separate foundations.

Figure 9.5.5.4-2. Examples of vertical aesthetic features on or near abutments

9.5.5.5 Abutment forms

Abutment forms are often prescribed to have surfaces other than plain plywood for exposed concrete to be cast against, such as MDO or HDO plywood. Smooth or textured liners can also perform the task of preventing wood grain appearance when forms are constructed of wood materials, which is typically the case.

Abutment wing formwork is not highly standardized and is usually job-built of lumber and plywood for each bridge. While there may be some benefit to re-use of formwork for opposite corners of a single bridge, there is little potential for re-use of abutment formwork from bridge to bridge, and oftentimes a contractor builds both abutments at the same time so forms can't be re-used at all. Consistency in details from abutment to abutment within a single bridge project is wise from a constructability standpoint, as this approach has less potential for causing confusion on the jobsite. Since each corner may have a slightly different overall height from top of footing to top of deck in the region of the front face of abutment, mask walls of a single bridge should generally use the same geometry as described from the top down to ensure consistency in appearance.

9.5.5.6 Substructure enhancement cost estimation

Estimate the enhancement cost for aesthetic pier designs by computing the volume of additional concrete required beyond what would be necessary to build a typical multi-column frame pier or T-pier, whichever baseline option is the most viable for the application. This includes extra columns used in frame piers that, for aesthetic reasons, have no cap cantilevers. VCF design considerations may impact how much additional concrete is considered an enhancement. Compute additional abutment concrete volume for mask wall extensions and other such features as part of enhancement cost. Custom formwork should also be considered when establishing enhancement cost. This can often be estimated by increasing the concrete cost for the affected additional volume by a percentage premium. Premiums of 150 to 200 percent of normal concrete cost have been used, depending on the custom formwork associated with the special shaping at either piers or abutments. Also compute the surface area affected by form liner textures and use a multiplier that approximates the current cost of in-place textures.

For some projects with unusually wide and large piers, such as those necessary to support multilane highway bridges over major rivers, there is no standard shape that is easily applied to the conditions. It may be harder to establish the baseline pier shape for such projects, thus it makes less sense to attempt to establish a baseline cost that doesn't include any pier shape enhancements. For these projects, figure the enhancement cost of the piers based on special formwork needs that are strictly for aesthetic purposes, and include surface area costs of any texturing, rustication, or post-applied treatments.

9.5.6 Barriers

See BDM 5.8.1.2.5 for information on aesthetic barriers.

9.5.7 Pedestrian and bicycle railing/fence

See BDM 5.8.1.2.5 for information on aesthetic pedestrian railing/fence.

9.5.8 Special lighting on bridges

When a new or replacement bridge project is located within or near a community, the local municipality will sometimes request lighting be placed on the bridge to light the roadway, pedestrian facilities (if present), or to enhance aesthetics. Pedestrian and bicycle tunnels constructed and owned by the DOT regularly have lighting installed by the local municipality or trail authority. DOT policy is to accommodate this lighting if it is not anticipated to negatively affect bridge or roadway function, for example through excessive glare, distraction, or impacts to sight distance. Additionally, the DOT does not allow red-colored lighting within the roadway operating environment.

Project locations within city limits, existing lighting along the bridge or approach roadway, streetscaping, and lighted sidewalks or trails in the project vicinity are clear indicators that the local municipality may desire lighting on the DOT project. Pedestrian tunnels are typically lighted for proper function. District staff should be contacted during the project's early planning to see if discussions with municipal officials regarding lighting have occurred or are planned.

Figure 9.5.8. Examples of City-installed lighting

DOT costs associated with municipality-supplied lighting on its bridges or pedestrian tunnels are limited to the embedded conduit, junction boxes, integrated structural light pole or fixture supports, and any embedded anchorages for the light fixtures. All remaining costs and responsibilities including lighting design and analysis, fixtures, conductors, power supply, installation, controls, connectivity, maintenance, and utility billing costs are borne by the municipality.
If the DOT develops a working 3D model of the project, it may be possible to perform comparative visualizations of different lighting scenarios, including total fixture count, pole spacing, fixture locations, etc. on behalf of the municipality. Such renderings would not be accurate representations of the lighting provided by the fixtures but would be for lighting concept comparison purposes only. Lighting design and any associated photometric analysis, accurate graphical representations (if desired), fixture specification, energy usage, cost estimation, etc. would remain responsibilities of the municipality.

9.5.9 Decorative concrete

9.5.9.1 General

There are multiple ways of creating concrete surfaces that can enhance a bridge's aesthetic design theme. Techniques used on past Iowa DOT projects are described here, but there are other available means of manipulating concrete material, forms, and surfaces that have been used elsewhere in the construction industry. Some of these may be explored for use on future bridge projects. BDM Table C9.5.9.1 includes a partial listing of examples of each decorative concrete treatment described in this section, excepting concrete coatings [BDM 9.5.10].

9.5.9.2 Articulation

Concrete surfaces and forms may be articulated with some level of freedom since liquid concrete will generally flow to the shape the forms allow. It is essential to keep in mind the implications that concrete shaping and articulation have on reinforcing requirements and on form complexity. When articulating concrete surfaces, follow general recommendations for a maximum of 4 inches of unreinforced concrete. This limits surface articulation to a maximum of 2 inches in most cases. Exceeding 2 inches of articulation will trigger an additional layer of reinforcing for all projected surface elements, except for some form liner textures.

Figure 9.5.9.2. Examples of concrete surface articulation

9.5.9.3 Rustication

Rustication is a longstanding and effective means of accentuating concrete shape and providing surface interest. Whenever rustication strips or panels are intended methods of concrete treatment, include the "General Notes for Concrete Rustication" in the plans. Previously mentioned guidance on surface articulation should be followed when establishing rustication depth(s).

Figure 9.5.9.3. Examples of concrete surface rustication

Shallow, beveled rustication is allowable on barrier traffic faces with certain restrictions on depth and orientation [BDM 5.8.1.2.5 and Bridge Rail Guide]. Additional concrete thickness must be added to barriers that include rustication to maintain clear concrete cover over reinforcing.
Minor construction issues have been experienced on some past projects related to main form removal with rigidly attached wooden rustication strips. These wood strips may not have been properly presoaked in accordance with the standard notes, therefore they may have swelled (via absorption of mix water) while the concrete took on its initial set during curing. Nonetheless, the notes also call for rustication strips to be fastened to main forms in a such a way that they remain in the concrete during form stripping, which allows concrete to further cure and diminishes changes of breakout along rustication edges. This requirement does not apply to steel forms, which have typically not been associated with breakout issues at rustications.

9.5.9.4 Form liner concrete texture

The use of textured form liners within concrete forms is a very common method for accentuating concrete surfaces. Form liners are available in a myriad of different texture patterns, depths, and different base materials (expanded foam, plastic, urethane, etc.) depending on how many re-uses of the liner the contractor may desire to achieve. Whenever textured concrete and form liners are specified, include the "General Notes for Textured Concrete Form Liners" in the plans. Combining concrete texture with post-applied color treatment can be a particularly effective aesthetic enhancement, especially when subtle multicolor treatments are used [BDM 9.5.10].

The recommended 4-inch maximum depth of unreinforced concrete for articulated surfaces may not rigorously apply to some form liners, depending on the characteristics of the chosen texture. Textures that exceed 4 inches of unreinforced concrete (including clear cover to reinforcing) may be acceptable if the percentage of projected concrete surface is limited to 50 percent or less of the affected surface.

When specifying acceptable form liners, list at least 3 preapproved liner manufacturers and products or pattern numbers in the plans. Attempt to identify all comparable liner patterns from known major manufacturers/suppliers for each application to ease acceptance during the construction submissions process. No physical sample submissions are typically required except for unlisted products submitted as proposed alternates to the preapproved liners.

Figure 9.5.9.4. Examples of form liner concrete texture

The “General Notes for Textured Concrete Form Liners” include a list of allowable materials from which form liners may be manufactured. Expanded polystyrene (EPS) foam are generally the most economical for a contractor but can be used only once. Plastics including ABS can be used up to 10 times and are somewhat more expensive than EPS. Rubber and urethane liners are typically the most expensive and are sometimes the only materials available in very deep texture patterns. There may be circumstances where the design would benefit from limiting the material type or eliminating certain materials. For example, form liners made from single-use EPS may be undesirable for concrete that can be closely scrutinized by pedestrians due to reduced texture detail and the “pebbled” surface that results. Disallowing EPS liners or prescribing multi-use plastic liners at a minimum may be a better choice in these cases. Certain kinds of deep textures or those that include undercut projected surfaces can only be formed by rubber or elastomeric form liner material, since a high degree of liner flexibility is required to ensure that the liner can reliably be removed from cured concrete.

Liner materials can easily be cut to fit many different applications. Narrow strips, unique shapes, curved limits, etc. typically present no constructability problems for contractors or their suppliers regardless of the liner material used. However, re-usage of liners may be limited by design choices, so consider the implications on the contractor’s costs especially when it comes to textures that can only be formed by the most expensive rubber or urethane liners.

Many of the common form liner suppliers advertise the ability to produce custom patterns. However, significant investigation into the costs associated with custom form liners is necessary to determine if this approach is feasible given project budgetary constraints. While re-usable custom liner textures may be economical for applications such as MSE wall panels where re-use potential within the project is typically high, the same may not be true for a bridge project. Designs that instigate manufacturer processes involving an artist or experienced artisan form liner developer are known to be quite expensive. To comply with DOT non-proprietary procurement requirements, at least 3 manufacturers would have to be able to provide an acceptable custom product and be listed in the plans. Likewise, investigations into the capacity of manufacturers to provide these customized materials would have to involve as many suppliers as could be identified within the general construction marketplace.

When construction involving textured concrete surfaces is staged, include plan notes to ensure use of the same form liner manufacturer, pattern type and number, as well as the same liner material on subsequent stages as was used on the initial stage. There can be minor yet perceptible differences in the results produced by different form liner materials, even if the identical supplier and pattern is used. This is especially important when stage construction joints are present within the textured surfaces. Under DOT guidelines, use of proprietary form liner selections in plans for later stages of bridge work is justified by the presence of the texture on the first stage work.

Only certain types and depths of textures are allowable for use on concrete barrier traffic faces for some conditions [BDM 5.8.1.2.5 and Bridge Rail Guide]. Additional width must be added to barriers with texture on either face to maintain minimum clear concrete cover.

9.5.9.5 Integral thin veneer brick

Integral thin brick for structural concrete has been used extensively by the Iowa DOT on bridge and retaining wall projects since 2010. It is a constructable and permanent means of introducing color into concrete structures. Two different available systems for incorporating thin brick into formwork have been used. One system uses individual gaskets for each brick that can be connected on the jobsite into multiple orientations or coursing of brick inside the concrete forms and is highly versatile for virtually any application. Another system uses custom-fabricated gasket panels made to order for the needs of a specific project, thus limiting the amount of on-site assembly work performed by the contractor’s crew. Both options are allowed by the contract documents, and the choice is made by the contractor and their supplier(s) depending on project characteristics.

Thin veneer brick units are available in corner pieces that can help to replicate the appearance of real, full modular brickwork in the completed concrete. It is critical to use an 8-inch module as the basis for overall concrete dimensions when brick wraps the corners of any constructed element. When wrapping corners, the designer should be aware that it is sometimes difficult to maintain the alignment of forming panels

around corners, especially on four-sided construction items like a rectangular pier column. Corner bricks are the most likely items to fall out of the forms before or during pouring if adjacent forms aren't properly aligned. To allow the utmost flexibility and some construction tolerance in these cases, some designers have held the brick away from corners, essentially creating brick inserts framed with plain concrete on each column face. A more effective method of maintaining the visual appeal of real brick construction is to leave a brick-sized (4-inch by 8-inch) reveal at the corner and wrap both resulting outside concrete corners with corner bricks, leaving a small gap at the inside corner to allow adjacent forms to shift vertically as necessary during form fit-up. Examples of this technique can be seen on several bridges carrying I-29 over local roads in Sioux City.

The contract documents should allow for multiple acceptable thin brick finish types in plans (e.g. "velour or wire cut") to ensure product availability, which can fluctuate throughout the construction season and over multiple years, depending on general demand. Bricks of a desired color may be available in one finish but not others, so it is wise to allow more than one finish type to be used.

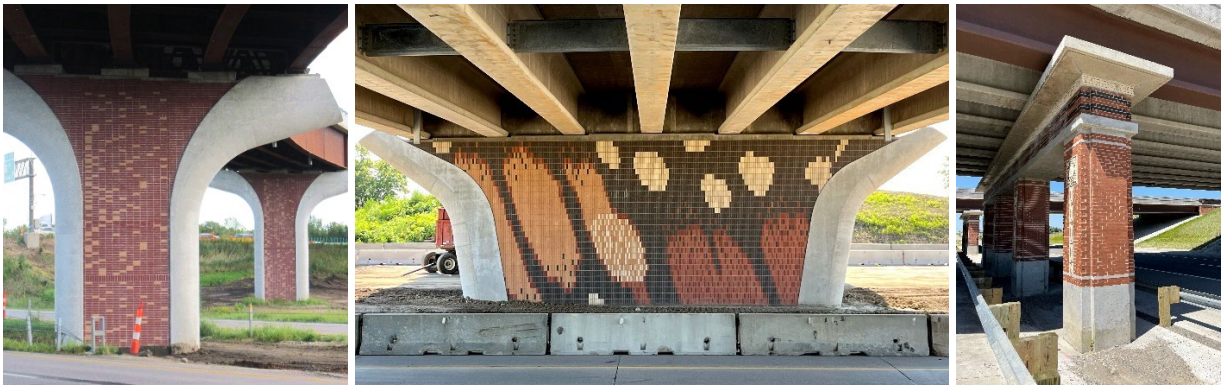

Figure 9.5.9.5. Examples of integral thin veneer brick in structural concrete

While it is easiest and most constructable to employ integral thin veneer brick in rectilinear applications with only horizontal and vertical limits for the brick surfaces, thin brick can also be cut to fit angled or curved limits within flat surfaces. Framing brick treatments like these in shallow recesses may work best for appearance, but this can also be done on flush surfaces. Keep in mind that small pieces of bricks are harder to keep in place prior to and during the concrete pour, and often must be glued into the form using approved adhesive. It is advisable to specify that any cut brick unit be omitted if it does not have at least one side measuring 2 inches or more. The finished result will not suffer any significant reduction in visual quality because small brick pieces are excluded.

Thin brick is considered acceptable for use on concrete barrier traffic faces for some conditions [BDM 5.8.1.2.5 and Bridge Rail Guide]. The 0.625-inch nominal thickness of thin brick can be considered part of the clear concrete cover over reinforcing in most applications, including traffic barrier faces.

9.5.9.6 Integral concrete color

Integrally colored concrete is generally reserved for precast or cast stone elements due to its high cost and the inconsistencies that can be experienced in vertical concrete cast in a field application. While the colorants themselves are not particularly expensive, all concrete mixing and batching equipment must be thoroughly cleaned and not contaminated with regular gray concrete mixes during the time used to batch colored concrete. This greatly increases the cost of plant-provided material. One solution might be a dedicated, temporary mixing and batching setup near the project site, but this is a prohibitively expensive proposition for all but the largest projects and the most capable contracting teams.

Cast-in place concrete construction with integrally colored concrete comes with additional complications beyond basic material cost upcharges. If forms are not perfectly watertight along the exposed surfaces, mortar leakage will create obvious inconsistencies in color and texture of the cured concrete. Multiple concrete lifts can create layers of varying color in a finished surface. When patching concrete, difficulties in color-matching are seriously compounded by the presence of colorant. Integrally colored concrete is

generally not appropriate for cast-in-place field application on bridges, but some retaining walls have been moderately successful.

Integral colorant is well suited to precast concrete applications such as Mechanically Stabilized Earth (MSE) and tilt-up retaining wall panels. Other acceptable applications include small precast accent items or panels that can be mounted to the structure via mechanical fasteners or grouted into prepared cavities. Precast concrete plants and cast stone suppliers have environmental controls and well-established work procedures for addressing the special needs associated with integrally colored concrete and can assure quality and consistency in the resulting products.

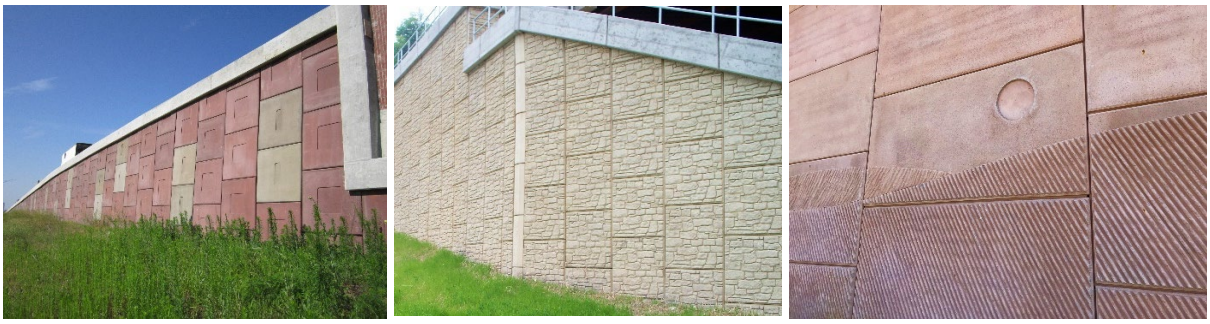

Figure 9.5.9.6. Examples of integrally colored MSE wall panels

Occasional flatwork, such as colored and texture-stamped raised medians infrequently used on bridges where approach medians include aesthetic treatment, is another example of a manageable application of colored concrete in the field. Colored flatwork concrete is often color-sealed with an approved sealer pigmented to match and enhance the integral color. If there is interest in this type of application, search past Special Provisions for “colored stamped concrete paving”. These have most commonly been used on Local Systems projects, so a thorough review is advised before use of such provisions on State projects.

9.5.9.7 White cement concrete

White cement is generally acceptable to specify for concrete patching material to help patches blend with or remain slightly lighter than surrounding concrete. White cement may also be used as a constituent ingredient in a rubbed concrete finish. However, fully white cement concrete is very expensive to use in large quantities for cast-in-place work due to the combination of white cement cost and the need to use white or near-white sand for fine aggregates. White aggregates are not easily or readily sourced, and often require more long-distance transport of material and potentially new contractual arrangements for concrete suppliers. White or near-white manufactured sand, for example from crushing limestone, creates angular grains that can cause consolidation issues in cast concrete surfaces. These problems typically manifest in the form of larger than normal bugholes and concentrations of air voids at the form surface. Additionally, no fly ash or GGBFS is allowed, and form release agents must be verified as non-staining for white concrete. As with integrally colored concrete, concrete mixing and batching equipment must be thoroughly cleaned and not contaminated with regular gray concrete mixes during the time used to batch white cement concrete. This greatly increases the cost of plant-provided material. One solution might be a dedicated, temporary mixing and batching setup near the project site, but this is a prohibitively expensive proposition for all but the largest projects and the most capable contracting teams.

9.5.9.8 Post-casting surface treatments

Post-casting concrete surface treatments can sometimes be used if appropriate for the aesthetic theme, level of visual exposure, or opportunity for scrutiny by pedestrians. The following articles outline some treatments employed on past Iowa projects.

9.5.9.8.1 Abrasive blast finishing

Abrasive blast treatment such as dry abrasive blast finishing or combined sand- and water-blast finishing can be used to remove form lines, shiny areas, stains, and to change concrete surface texture. Use of dry

abrasive blasting is conditional based on the potential environmental impacts and detrimental effects on adjacent properties or active traffic roadways. Impacts of abrasive blasting on surrounding areas of a project site can be mitigated by using combined sand- and water-blast finishing, but some of these concerns will remain. Cleanup of blast medium and concrete laitance adds labor cost, as well. Abrasive blast finishing of precast concrete (e.g. MSE wall panels) at the production facility can be performed without these concerns. When used, specify abrasive blast finishing in accordance with International Concrete Repair Institute (ICRI) Technical Guideline 03732 and provide a desired Concrete Surface Profile (CSP) number as a reference for the contractor for how deeply the concrete should be abraded. Additional notes may be appropriate for controlling the specific results desired in the finished surfaces.

Figure 9.5.9.8.1. Examples of abrasive blast finished concrete surfaces

9.5.9.8.2 Rubbed concrete finish

Like abrasive blasting, a well-performed rubbed concrete finish can cover or remove inconsistencies seen in concrete surfaces because of forming, pouring, and casting operations. While being somewhat labor-intensive, rubbed finishing doesn't have the environmental concerns created by abrasive blasting. Class 2 strip down finishing in accordance with the Standard Specifications should be performed prior to beginning rubbed finishing. White cement may be specified as part of the mortar mix used in the rubbing process to lighten surfaces, if desired. Rubbed finishing has been used on several Iowa projects, with mixed results.

9.5.9.8.3 Decorative prefabricated inserts

An aesthetic theme for a structure may occasionally include some kind of prefabricated applique such as precast concrete or cast stone of special design, Terra Cotta tiles, or a bronze plaque. A shallow recess or cavity will often be necessary both to adequately receive the insert and to make it appear to be an intended part of the structure rather than merely applied to the surface. Some inserts, especially those of significant size or weight, will require mechanical fasteners for secure attachment. Bronze plaques are typically attached in this manner. Large, heavy pieces of precast concrete or cast stone will likely have grouted mechanical fasteners hidden behind the unit for the best appearance. Smaller items may only be grouted into receptive indentations in the concrete using adhesive setting mortar.

Figure 9.5.9.8.3. Examples of decorative prefabricated inserts

9.5.9.8.4 Broomed or raked slope protection

Intermittent coarse broomed or raked finishing has been used on concrete slope protection in at least two different patterns. This treatment can cross the normal joints in the concrete or be contained entirely within them. The contrast between heavy broomed sections and smooth floated areas provides a subtle effect that can complement other bridge treatments.

Figure 9.5.9.8.4. Examples of heavy broom finished concrete slope protection

9.5.9.8.5 Acid etching and exposed aggregate

Acid etching and exposed aggregate finish treatments are typically only appropriate for use on precast concrete items while they are still in the production facility. Tightly controlled production environments are necessary to ensure consistency in the treatment of all elements intended for a single project. Surface retardation and subsequent pressure-washing after form stripping is a particularly sensitive series of operations that can be negatively affected by changes in conditions or timing. Acid etching may have environmental implications if performed on a project site. For these reasons, these treatments are reserved for precast items in production facilities.

9.5.9.8.6 Concrete coatings

Concrete coatings may also be considered for aesthetic enhancement of concrete surfaces [BDM 9.5.10].

9.5.9.9 Other decorative concrete techniques

Some decorative and innovative concrete materials and construction techniques that have not been used to date by the Iowa DOT but have been employed elsewhere in both bridge and general building construction include the following:

- Recycled material form liners
- 3D-printed form liners
- Fabric-formed concrete
- Photocatalytic cement concrete
- Concrete pavers embedded within bridge path or slope protection concrete
- Cladding with cast stone panels, real stone veneer, or metal panels
- 3D concrete printing - some related research has been performed at Iowa State University with support from Iowa DOT
- Photo-engraved concrete form liners
- Laser-engraved concrete

9.5.10 Coatings for structural concrete

For aesthetic purposes, it may be appropriate to apply a color-pigmented coating to some exposed concrete surfaces of a structure. However, concrete structure painting must be considered with caution and excessive painting of entire structures is generally discouraged. Painting should be limited to key portions of structures or only to accent surfaces whenever possible. Other means of incorporating color

such as integral thin veneer brick, integral concrete color pigment, or painting steel elements of a structure should sometimes be considered as alternatives to painting concrete.

9.5.10.1 Surface preparation for coating

Specify the current versions of the “Developmental Specifications for Concrete Surface Preparation and Testing Prior to Coating Application” and the “Developmental Specifications for Structural Concrete Coating” in any structure plans that include coated concrete unless there are unusual circumstances of the types mentioned later in this section. Coating material type and any preapproved manufacturers and products must be covered in plan notes, as well as color and finish specifications for each color to be used on the project.

The use of the combined sand- and water-blasting specified in the “Developmental Specifications for Concrete Surface Preparation and Testing Prior to Coating Application” is critical to the performance of any concrete coating. This moderately aggressive blasting is expected to remove any loose surface concrete and aggregate that could potentially spall during the initial freeze-thaw cycles experienced by the structure. It also creates a surface profile that is conducive to coating penetration and adhesion. As prescribed in the DS, surfaces must be allowed to thoroughly dry and must be successfully tested for readiness to receive the coating prior to application.

9.5.10.2 Acceptable surfaces for painting

On bridges, portions of above-grade pier and abutment concrete surfaces, concrete fascia beam side and bottom surfaces, and outside faces of concrete traffic barriers are the usual surfaces considered for post-applied aesthetic coating treatments. For pedestrian tunnels, interior barrel surfaces and headwall parapet and wing surfaces can be treated. Cast-in-place and MSE retaining wall exposed faces can receive post-applied coatings, however for MSE wall construction it is generally preferred that color be incorporated using integrally colored concrete in the prefabricated panels. Concrete form liner texturing on bridge surfaces is often combined with post-applied pigmented coatings for the best aesthetic effect. Do not apply coatings to the top bearing surfaces of bridge piers or abutments, or to the floors of tunnels. The front face of standard abutment footings is typically not coated since it is short, heavily shaded, and is not prominent from most vantage points.

Painting of concrete fascia beams is an acceptable means of adding color to a bridge, and to visually separate the superstructure from other bridge elements. PPC beams have exceptionally high-quality surfaces that should never experience spalling throughout their service life. It is worth noting that if painted beams of an overpass bridge are ever struck by an over-height vehicle, the presence of a coating will complicate the beam repair process.

Figure 9.5.10.2. Examples of painted bridge surfaces

The vertical edges of bridge decks should never be painted. The reason is that during the deck pour, partially cured and dried concrete screeded off the top of the deck is often tossed by finishing workers toward the form boards at the edge of the deck where it is hand-screeded into place. This material may be inherently weak and can spall during the first several freeze-thaw cycles endured by the bridge, and

perhaps continually throughout service life. Any coating on the deck edge, even if substantially vapor-transmissive, will spall with the weak concrete, leaving gaps in the color and creating a degraded appearance. Additionally, if the edge of deck is unpainted, it typically does not make visual sense to paint the underside of the deck overhang beyond the fascia beam. This area is also heavily shaded, which makes it difficult for any coloration to be seen by passing motorists.

Traffic face and top surfaces of concrete barriers are generally unsuitable for aesthetic coatings because of exposure to road salts, occasional vehicle strikes, and repeated snowplow blade contact. One exception is when an approved shallow stone-textured form liner is used and is painted in multiple colors to mimic real stone. This type of finish can hide minor spalls and scrapes better than a single continuous color on a smooth untextured surface. The outside faces of traffic barriers are generally acceptable surfaces for post-applied color treatments. Special plan notes are advisable to ensure that no incompatible curing agents or sealers are applied to barrier surfaces intended to receive post-applied coatings.

9.5.10.3 Coating material types, usage conditions, existing coatings

When structural concrete is identified for color through painting, use “breathable”, i.e. highly vapor-permeable, coatings for most applications. The preferred coating material is mineral silicate paint, both for its vapor transmission and its proven concrete surface penetration. See Materials I.M. 482.12 for information on approved products. 100% acrylic emulsion masonry coating and breathable concrete stains are also acceptable. Benefits of the use of breathable coatings include the ability to paint new concrete that may still exhibit internal moisture from its initial cure. Using sealers or other non-vapor-permeable coatings for aesthetic reasons risks entrapping internal moisture and continued spalling of the surfaces during freeze-thaw cycles even if painting is substantially delayed after construction and appropriate surface preparation is employed.

One exception to the use of breathable aesthetic coatings is when there is an existing coating of an incompatible type. Most concrete paints must be applied to uncoated concrete substrates only, so the presence of an existing coating presents a problem. The existing coating type must be verified and typically the same material is applied over the top, though some coating types may be applied over existing coatings. This must be thoroughly verified with the manufacturer before specifying materials.

When an existing coating is confirmed to be a high-silicone content acrylic sealer, only more of the same type of sealer should be used to topcoat the surfaces. This is because this coating is thermoplastic, and new applications will chemically react to the existing coating, leaving essentially one coat of material with no failure planes between coats. Do not topcoat this material with other paint types or with anti-graffiti coating. For graffiti remediation, cover graffiti by top-coating this material type with more of the same sealer in a matched color. The high-silicone acrylic sealer was typically specified on past projects with bid items 2403-7302000 “Colored Sealer Coating for Structural Concrete” and 2403-7304000 “Colored Sealer Repainting”. Presence of these bid items on existing structure plans indicates this material was used, and only the identical material should be used for repainting, including for graffiti remediation. High-silicone content acrylic sealers do not readily accept other materials as topcoats, and the adhesive bond between them would be very weak.

Another exception to the preferred use of vapor-permeable coatings may be when the surface will also receive non-sacrificial anti-graffiti coating. Anti-graffiti coatings are generally not vapor-transmissive in nature, but behave more like concrete sealers, so there is often no point in forcing vapor permeability in the initial aesthetic coating only to top-coat it with anti-graffiti coating. However, there may be other reasons to use a breathable paint which will be coated with anti-graffiti treatment, such as coating before all internal moisture has dissipated (i.e. concrete less than 45 days old), material safety factors, preference for low volatile organic compounds, or the required “open time” or workability of the paint to perform multicolor faux stone aesthetic treatments.

When non-vapor-permeable coatings such as sealers are used on new concrete because of unusual circumstances, allow entrapped moisture to escape by waiting 45 days or longer if possible before applying the coating. If multiple structures are expected to receive a non-breathable coating and there are delays to full project completion such as from staging or multi-year corridor work, wait to coat the entire project at the end so that some concrete has experienced freeze-thaw cycles prior to coating. This way,

weak concrete surface spalls may have already occurred, and the structures may not shed coating in those zones during the subsequent service period. There will also be less chance of painted surface damage resulting from ongoing construction operations and related airborne dust and other contaminants.

Special applications of impermeable concrete coatings designed for sealing concrete or bridging small cracks while also creating an aesthetic finish are unusual and require thorough investigation into the properties of the material(s) and their appropriateness for the application. Product manufacturer representatives should be engaged to review the precise nature of the usage and for specific guidance on proper surface preparation, surface readiness testing, and coating application methods. Do not use the "Developmental Specifications for Concrete Surface Preparation and Testing Prior to Coating Application" or the "Developmental Specifications for Structural Concrete Coating" for these purposes unless these specifications precisely match the manufacturer's recommended procedures.

9.5.10.4 Specifying colors and finishes

Use of the SAE AMS-STD-595 (formerly Federal Standard No. 595C) color standard is preferred over other industry color standards. Colors can be found at AMS Standard Color Chart (https://ams-std-595-color.com/). Keep in mind that the first digit of any 5-digit color number indicates the finish of the paint, as follows: "1" = Gloss, "2" = Satin/Semi-gloss, "3" = Flat. However, most colors in the SAE AMS-STD-595 color chart can be manufactured by paint suppliers in any finish, so the designer is not limited to selecting, for example, flat finish colors only from those shown in the color chart with a prefix of "3". Select a color and change the prefix to the finish desired, then list the color number, the finish and a brief description of the color in the plan notes to ensure correct communication of the color to prospective contractors. For most concrete painting work, it is desirable to indicate a flat finish (prefix "3"), however some materials such as high-silicone colored sealer coating are only available in a gloss or satin finish. For those materials, colors should be indicated with prefix "2" to avoid bidder confusion.
It is generally advisable to use earth-tone colors, since they are less susceptible to UV fading than bright colors. Bright color accents on past projects, especially bright blue and red colors, have been performed in 100% acrylic emulsion paint for the best long-term color retention. If different material types are mixed on a single project to achieve bright colors for some portions, specify that the first coat of each material must be applied to raw prepared concrete surfaces and that overlapping of the materials is not allowed for any subsequent coats.

Multiple-color finishes that involve blending of different colors, such as for faux stone finish treatments on textured concrete, are sometimes desirable. If known, the preferred SAE AMS-STD-595 color numbers can be specified for each individual color to be used. A careful description of the desired color result and a suggested minimum number of colors to be used can also suffice for bidding purposes. Specify that all colors intended for use in such finishes be submitted as color draw-down samples for review prior to the contractor purchasing materials. Mineral silicate paints and breathable pigmented concrete stains are best suited to this type of blended multi-color work due to their longer "open time" both in the container and on the coating application devices used such as brushes, sponges, and rags. These treatments are not as easily achieved with high-silicone content sealers. Do not attempt to specify application techniques in the contract documents, only the desired results.

9.5.10.5 Pedestrian tunnel interior coating

The barrel wall and slab surfaces of pedestrian tunnels should be painted with a light color to enhance the effect of interior lighting. White or near-white color is typically used. A semi-gloss or gloss finish can also enhance the effect of the lighting and is preferred for that reason.

Tunnels can particularly become targets for graffiti, so some means of addressing graffiti potential is advised. As shown on Pedestrian Tunnel Standards PT-AD 1-20 and PPT-AD 1-20, the use of anti-graffiti coating over the top of a pigmented 100% acrylic paint will leave a semi-gloss surface, which can enhance the interior lighting. The same is true for the use of high-silicone colored sealer coating, which has a semi-gloss or glossy appearance and can act as its own graffiti remedy via top-coating. Both approaches essentially seal the tunnel surfaces and make them non-breathable, so allowing a preferred 45 days (minimum 28 days) between the last concrete barrel pour and the application of coating is essential to ensuring that concrete internal moisture levels are within specification.

9.5.10.6 Anti-graffiti coating

The choice of whether to include anti-graffiti coating on a structure is typically left up to District staff. Precedent issues with graffiti on the structure to be replaced or elsewhere in the vicinity of the project can certainly trigger inclusion of the protective coating.

When anti-graffiti coating is applied as a topcoat to an aesthetic coating, specify that compatibility between the 2 materials shall be verified with the manufacturer(s) by the contractor. Coating submissions post-project award should be double-checked for this compatibility.
Anti-graffiti coating products are covered by Iowa DOT Materials I.M. 491.23. Typical plan details associated with anti-graffiti coating of structures include application of the coating to the identified vertical concrete surfaces from ground level upward to 10 feet above grade. However, it is often advisable to extend coating coverage vertically to a logical surface break point. This is because some applications have noticeably changed the color of the concrete despite I.M. 491.23 requirements that such coatings are not allowed to change the substrate color. The potential color change may not be as noticeable if it occurs at a physical surface change, such as a form liner texture limit, a rustication, or a pier column-to-cap intersection. Color change may not be noticeable on surfaces that have already received pigmented aesthetic coating, in which case the vertical 10 feet limit may be acceptable. Sometimes it is best to coat the entire surface, for example an unpainted concrete retaining wall or abutment wingwall with only a minor portion of its surface that is taller than 10 feet above local grade. Include appropriate details and notes in the plans to indicate where anti-graffiti coating is required and to what dimensioned limits.

When anti-graffiti coating is applied to new concrete as part of a construction project, it is advisable to wait as long as possible to apply the coating. Up to 45 days after casting or longer is preferred. Unlike the previously mentioned breathable coatings, anti-graffiti coating is not vapor permeable and will become a barrier that will not allow internal concrete moisture to escape. It is desirable to allow as much time as possible to elapse between concrete placement and the application of anti-graffiti coating.

Provide the District with appropriate documentation for their files. It is advisable for District maintenance staff to keep documentation on file of the projects and the surfaces that have been treated with anti-graffiti coating, since presence of the coating will indicate potentially different remediation efforts on those structures than on those without the treatment. For example, District maintenance staff may regularly paint over graffiti, but surfaces treated with anti-graffiti coating should never be painted as a remedy.

Permanent, non-sacrificial anti-graffiti products of the types listed in I.M. 491.23 typically advertise a coating service life of 15-20 years. That period may be shortened by repeated remediation treatments such as pressure washing or hand scrubbing with detergents. Proper surface preparation and coating reapplication may be required multiple times throughout the service life of a structure to maintain graffiti protection.

9.5.10.7 Repainting

See BDM 9.5.10.3 for related information. Repainting concrete surfaces that have an existing coating involves discovery of the precise nature of the existing material before specifying a topcoat material. In most cases, it is advisable to apply only more of the identical material after proper surface preparation has been employed, typically using the methods prescribed in the “Developmental Specifications for Concrete Surface Preparation and Testing Prior to Coating Application”. If for some reason a different material type must be used, specify the manufacturer’s recommendations be precisely followed for surface preparation and application.

It is highly impractical to attempt to specify complete removal of an existing coating from concrete with the intent of creating a raw, contaminant-free surface. Successful removal may not be ensured. Such efforts would probably require extremely aggressive abrasive blasting, which can present challenges on the jobsite if traffic or other sensitive conditions exist nearby. Persistent coating residues could impact adhesion or other performance characteristics of new top-coating material.

9.5.11 Coatings for steel railings

Coating systems are typically employed for weather and chemical protection and to prevent corrosion of structural steel pedestrian and bicycle fall protection railings, separation barrier bicycle railing attachments, and combination steel-on-concrete traffic railings. Galvanizing represents the most basic coating type used and is often the only coating included. Although paint can provide added weather and chemical protection to these components, paint coatings are usually a means of adding color and a higher-quality finish, typically to complement an aesthetic theme.

9.5.11.1 Galvanized-only railings

Galvanized-only railings and fences should be considered the baseline solution for most projects, even for those with extended aesthetic features. Sometimes the appearance of galvanized railings or fences can be complementary to the aesthetics, depending on the chosen character and color palette. The design and complexity of a custom railing can often be enough to convey the aesthetic design concept, and the addition of color is unnecessary.

For most structural steel traffic railings, unpainted galvanizing is preferred. Topcoat materials do not stand up well to the harsh conditions traffic railings are routinely subjected to, including vehicle strikes, chemical action from road salts, and snowplow blade contact. Damaged topcoat systems will have significantly worse appearance than plain galvanized steel surfaces when exposed to these effects. Therefore, top-coating is strongly discouraged from both a maintenance and visual quality standpoint.

Figure 9.5.11.1-1. Examples of unpainted galvanized steel traffic railings

For steel bicycle railing attachments to separation barriers, unpainted galvanizing is preferred due to the harsh conditions adjacent to traffic, even though vehicle strikes and snowplow contact are typically not concerns for back-mounted bike railings. Top-coating may be used at separators when aesthetic demands are high and where traffic volumes and speeds are reduced, as in some urban conditions.

Figure 9.5.11.1-2. Examples of painted and unpainted galvanized bicycle railing attachments

For railings that are galvanized but not painted, call for galvanizing in accordance with ASTM A 123 in the plan notes. Depending on the types of details included in the fabrication of the railing, reference to ASTM A 384 may also be appropriate. This specification can encourage best practices in both fabrication and galvanizing associated with unusual details such as welded wire mesh, plates thinner than 0.25-inch, certain types of welded connections, and can address general tendencies for some fabrications to warp, twist, or otherwise distort during galvanizing. Include additional notes requiring abrasive blast cleaning to

a minimum of Steel Structures Painting Council SSPC-SP6 “Commercial Blast Cleaning” prior to galvanizing.

Figure 9.5.11.1-3. Examples of unpainted galvanized steel pedestrian/bicycle railings

9.5.11.2 Duplex coating system specifications

The preferred approach for adding color to bridge railings is to use a duplex coating system, i.e. polyester powder coating or high-performance paint applied to carefully prepared galvanized steel. The use of duplex systems is seen as an advantage due to the galvanizing having the ability to “self-heal” some scratches and scrapes that reach through the topcoat and damage the galvanizing underneath. This ability helps to prevent corrosion from minor damage and potentially allows the railing to remain in service much longer than a painted-only example.

Critical procedures must be followed in fabrication, galvanizing, and powder coating or painting to ensure success. While Iowa DOT Materials I.M. 568 provides clear specification control of the coating process for galvanized steel, additional plan notes are sometimes recommended for clarity and to cover unusual circumstances in the design of the railing that may impact the duplex coating process.

Plan notes should always reiterate that Materials I.M. 568 controls work associated with duplex systems. That specification also directs the contractor’s attention to preapproved galvanizers and paint/powder coating shops, so no further direction on these items is needed in the plan notes. However, the material type of the coating must be established by plan notes, along with color specification and direction regarding sample submissions and approval processes.

Include plan notes requiring abrasive blast cleaning to a minimum of Steel Structures Painting Council SSPC-SP6 “Commercial Blast Cleaning” prior to galvanizing. Notes should call for galvanizing in accordance with ASTM A 123, and possibly ASTM A 384 when fabricated assemblies meet some of the characteristics mentioned in BDM 9.5.11.1. Reiteration of the I.M. 568 requirements to avoid quenching after galvanizing and to avoid application of chromate conversion coating is also advisable, since these are critically important to the condition of the galvanized surface prior to painting or powder coating.

Appendix F of Materials I.M. 568 adequately covers the surface preparation requirements for the galvanized surfaces to receive paint or powder coating, so reference to other specifications is unnecessary. Timing and travel log requirements documenting all processes are also thoroughly detailed in I.M. 568.

Powder coating is a reliable high-performance coating routinely used on galvanized steel railings and is the generally preferred coating type for pedestrian railings. Plan notes should include requirements that any visually unacceptable components must be completely stripped and recoated in the shop, since significant damage or quality problems with this type of coating cannot be repaired in the field.

When galvanized steel railings are painted, high performance 3-coat fluoropolymer paint systems should be used. Fluoropolymer paint is the preferred coating for galvanized structural steel traffic railings. Primer, intermediate, and finish coats are typically specified to be different colors to aid inspections during the application process.

Figure 9.5.11.2. Examples of powder coated galvanized (duplex system coated) steel railings

I.M. 482.09 covers approval of fluoropolymer paint systems for use on structural steel but is not specific to galvanized steel painting. However, the same approved 3-coat fluoropolymer systems listed in the MAPLE for general structural steel can be used on properly prepared galvanized steel. While the MAPLE listing of galvanized surface systems approved under I.M. 482.08 and the listing of fluoropolymer systems are currently identical, in the future it is possible that systems not considered high performance could be added to the galvanized surfaces listing. Non-high-performance paints may be used for other purposes on galvanized structural steel items such as bolts and deck drain tubes but are not preferred for use on bridge railings.

Whether to use powder coating or high-performance fluoropolymer paint on galvanized bridge railings depends on several factors. Powder coating can be touched up in the field for minor repairs, but major repairs require removal to a shop. This can sometimes be accommodated if the railing is for pedestrians only, and the facility can be closed for service or kept open using a temporary fence. If the ability to repair the coating in place in the future is essential, fluoropolymer paint should be specified. This would certainly be the case for a structural steel traffic railing that is an essential part of a crash-tested barrier system, since removing such a device to recoat it in a shop would leave a partially functional or completely dysfunctional traffic barrier in service, requiring significant interim protective measures if traffic is maintained on the facility.

For the appropriate plan notes to be used, see the most recent examples of projects that included powder coating or painting over galvanized surfaces for the type of application desired. The Aesthetics Coordinator in the Bridges and Structures Bureau can provide these project examples.

9.5.11.3 Specifying colors and finishes

Use of the SAE AMS-STD-595 (formerly Federal Standard No. 595C) color standard is preferred over other industry color standards. Colors can be found at AMS Standard Color Chart (https://ams-std-595-color.com/). Keep in mind that the first digit of any 5-digit color number indicates the finish of the paint, as follows: “1” = Gloss, “2” = Satin/Semi-gloss, “3” = Flat. However, most colors in the SAE AMS-STD-595 color chart can be manufactured by paint suppliers in any finish, so the designer is not limited to selecting, for example, satin finish colors only from those shown in the color chart with a prefix of “2”. Select a color and change the prefix to the finish desired, then list the color number, the finish and a brief description of the color in the plan notes to ensure correct communication of the color to prospective contractors. For most railing powder coating or painting work, it is desirable to indicate a satin or semi-gloss finish (prefix “2”). For those materials, colors should be indicated with prefix “2” to avoid bidder confusion.

Designers should use caution when considering use of bright colors. Some colors can exhibit less UV stability and may be prone to fading. Earth tone and muted colors may perform better over the service life of the coated railing.

If the color palette of an aesthetic design concept indicates that a railing or fence should be a grey color, consider using a galvanized-only finish and eliminate the extra work and expense of the topcoat.

Flat finish paints can be prone to chalking over time, so are discouraged. Gloss finishes can show evidence of field touch-up and repairs more obtrusively than satin or semi-gloss finishes, so are also discouraged.

For powder-coated finishes, specify submission of 3” x 5” powder-coated plates for review and approval prior to the contractor purchasing materials. For painted finishes, specify submission of color draw-down samples. Regardless of the material type, no samples typically need to be submitted for black or white colored coatings.

9.5.11.4 Specifying coating and color for chain link fences

It is often desirable on aesthetic structure projects that include chain link fence to use vinyl coated fence mesh in one of the available standard colors. While the mesh, the horizontal fence pipes, and many fence accessories are readily available from manufacturers with factory-applied PVC coating, fence posts configured for structure mounting are custom assemblies and are not generally available. This means the plans must cover the requirements for properly coating the fence post assemblies.

Powder coating over galvanizing is the preferred method for coating structure-mounted fence post assemblies to match the vinyl coated chain link mesh and the other available vinyl coated fence components.

For coating of custom structure-mounted fence posts, refer to a recent example project plan for the appropriate notes to include. These special notes typically cover surface preparation requirements prior to both galvanizing and top-coating, including reference to Materials I.M. 568. The notes also allow for post assemblies to be PVC coated, if available and compliant with all other plan requirements. The notes must indicate the color of the coating and the required sample as discussed in BDM 9.5.11.3. The Aesthetics Coordinator in the Bridges and Structures Bureau can provide these project examples.

For vinyl-coated chain link fence mesh, specify PVC coating in accordance with ASTM F 668, Class 2B. This specification ensures the PVC coating is properly fused to the wire and won’t easily peel off the wire if cut or damaged. Specify one of the standard colors in accordance with ASTM F 934. Standard colors include black, white, brown, green and red. Custom colors are currently not possible.

9.5.11.5 Repairs of coated bridge railings

Repair of coated railing surfaces may be necessary or desirable during the service life of a structure. The type of coatings and their condition will determine the required procedures for remediation.
Repairs on galvanized-only railings can be made in the field using procedures compliant with ASTM A 780. Surface preparation, re-coating methods, and materials contained in the ASTM should be thoroughly understood before attempting to specify a repair of such surfaces. The age of the galvanizing is of critical importance relative to the procedures used, since newly galvanized surfaces must be treated differently than fully weathered surfaces. Partial disassembly of the railing may be necessary in some cases to adequately reach all degraded surfaces that need attention. Surfaces in the vicinity of the field work must be protected to prevent contamination by repair materials.

Prior to developing plans to repair a duplex coated railing, the type of existing topcoat must be confirmed. Check the original plans and any subsequent repair plans to verify the coating type. Repairs of powder-coated galvanized railings must be approached much differently than repairs to painted galvanized railings.

Repairs on painted galvanized surfaces can be performed in the field. However, repairs can be complicated by the condition of the existing paint. All loose and poorly adhered paint must be removed via mechanical means, and remaining edges feathered by careful sanding to achieve finished results that are visually acceptable. Special notes are necessary to control this type of in-field preparation work. The preferred re-painting material is a 3-coat fluoropolymer paint system, regardless of the type of paint previously in place. If the railing is being spot-repaired rather than entirely re-painted, color-matching of the new paint to the existing must be performed to achieve a good result. Surfaces in the vicinity of the

field painting work must be protected to prevent contamination by paint. The Aesthetics Coordinator in the Bridges and Structures Bureau can provide past project examples containing these special notes.

Repairs on powder-coated surfaces cannot typically be performed in the field unless the work involved is minor touch-up such as might be done immediately following installation. Touch-up must be performed in accordance with coating manufacturer recommendations. Surfaces in the vicinity of the field touch-up work must be protected to prevent contamination. Serious coating condition issues will involve complete removal of powder-coated railings from the structure for delivery to an approved powder coating shop. Existing powder coating should be specified for removal via blasting without damage to the galvanizing if present, and the assembly entirely re-coated. If complete coating removal can't be performed without damage to the galvanizing, the pieces should be re-galvanized as if newly fabricated. Investigation into the practicality of coating removal without galvanized surface damage is required before specifying. Partial or complete removal of existing galvanizing may also be required before re-galvanizing can be performed. Check with qualified industry representatives before specifying re-galvanizing.

If a previously painted-only, non-galvanized steel railing in need of repairs is encountered, consider removal of the railing to a shop for blast refinishing down to raw steel, then galvanize and topcoat in accordance with previous advice in this section. Repair of paint on non-galvanized steel railings in the field is not expected to provide significant additional service life in most cases and would not be cost-effective. Evaluate the general condition of the railing for continued serviceability before specifying repair procedures.

9.6 Aesthetic bridge design plan preparation

Reserved

9.7 Continuing project management

Reserved

9.8 Commentary on aesthetics and policy in the United States and Iowa

Roadway enhancement efforts have been a legislated part of the American highway culture for the last five decades. Beginning with The Highway Beautification Act of 1965, funding earmarked for enhancements has been included in every major highway bill passed by Congress. In 1968, the Federal Highway Administration (FHWA) began an annual program to award projects with scenic enhancement features. An accompanying FHWA document made a list of recommendations, among them was the following: "Encourage a high level of visual quality in every proposed freeway", and "adopt the systems concept of an interdisciplinary team approach to urban freeway planning on every level". The interdisciplinary team almost invariably included additional specialist designers to assist freeway and bridge engineers when aesthetic value was incorporated into project planning and design.

The National Environmental Policy Act (NEPA) of 1969 established environmental goals that directly affected federally-funded highway projects. Included in the Policy's directives were the following: "Assure for all Americans safe, healthful, productive, and aesthetically and culturally pleasing surroundings", and "preserve important historic, cultural, and natural aspects of our national heritage." It is important to remember that due to the limited staffing of federal and state agencies charged with overseeing NEPA, local community participants are often enlisted by those agencies to assess the performance of state DOTs against NEPA standards. Memoranda of Agreement with local municipalities are often the vehicles by which NEPA compliance is assured.

The National Highway System Designation Act of 1995 declared that "design for new construction… of a highway on the National Highway System may take into account… the constructed and natural environment of the area (and) the environmental, scenic, aesthetic, historic, community, and preservation impacts of the activity…". This Act officially moved design considerations already in place for bridges on the Interstate Highway System onto virtually all bridges on the NHS.

The Intermodal Surface Transportation Efficiency Act (ISTEA) of 1991 set aside ten percent, or $3.6 billion, of its transportation program for enhancements that increase the environmental, historic or

aesthetic value of a project. It was also at this time that the National Scenic Byways program was implemented. More recently, the Transportation Equity Act for the 21st Century (TEA-21) continued the Transportation Enhancements (TE) program when signed into law in 1998. The FHWA describes the TE program's purpose as "to strengthen the cultural, aesthetic and environmental aspects of the Nation's intermodal transportation system".

Other nation-wide agency activities related to enhancements of transportation infrastructure have paralleled the FHWA and legislative lead. The Transportation Research Board (TRB) established a Subcommittee for Bridge Aesthetics as part of its structures group. TRB also published the seminal guidebook, "Bridge Aesthetics Around the World" in 1991 as a designer's reference. The American Association of State Highway and Transportation Officials (AASHTO) has incorporated aesthetics into its guide publications for roadway and bridge designers from the 1980s until 2025.

With the introduction of Context Sensitive Design/Context Sensitive Solutions (CSD/CSS), the FHWA has infused the transportation enhancement effort with new directives for state agencies. The Iowa DOT has trained many of its supervisory engineers in the basics of CSD/CSS through FHWA-sponsored "Thinking Beyond the Pavement" seminars. FHWA has recognized that CSD/CSS can ease public involvement efforts on controversial projects and can help to streamline the often-problematic NEPA process that must be followed on many new works. Aesthetics can even be considered as mitigation for other negative project impacts. The FHWA has also launched a new website to showcase CSD/CSS projects from around the country. Iowa's first posting to this website was the Sioux City Gateway "Prairie Bridge" project.

The Iowa DOT's "Can-Do Process", Policy No. 500.02, originally drafted and approved in 2002, contains language reflecting the design principles embodied by the Context Sensitive Design/Context Sensitive Solutions approach to infrastructure development. This policy impacts highway project development work undertaken by all Highway Division Offices (Bureaus) and Districts.

C9 Bridge Aesthetics

C9.5.8 Special lighting on bridges

Table C9.5.8 contains examples of projects with special lighting.

Table C9.5.8. Special lighting projects

Location	Lighting Features
US 71 Okoboji Lakes Bridge and Causeway Dickinson Co. (original project no. unknown)	Ornamental light poles on pedestals along MSE retaining wall
I-80 over IA 965 in Coralville IM-080-6(168)241—13-52, Des. No. 102	Aluminum light sconces and fixtures at piers
Pedestrian bridges over I-235 in Des Moines IM-235-2(327)9—13-77, Des. No. 303	Arch rib and cable floodlights, abutment lights
IA 1 over the Des Moines River in Keosauqua BRF-001-1(24)—38-89, Des. No. 105	Ornamental light poles on custom deck cantilever pedestals along pedestrian railing
24th Street over I-29/I-80 in Council Bluffs BRFIM-080-1(308)2—05-78, Des. No. 508	Continuous fiber optic light on pedestrian fence, abutment artwork floodlighting
US 18/US 71 over the Little Sioux River in Spencer BRF-018-2(72)—38-21, Des. No. 106	Ornamental light poles on pedestrian railing pedestals
US 169 over E. Fork of Des Moines River in Algona BRF-169-8(41)—38-55, Des. No. 107	Lighting in decorative metalwork at railing ends
Wesley Parkway over I-29 in Sioux City IM-NHS-029-7(37)149—03-97, Des. No. 1711	LED spotlights and LED wall-wash fixtures
US 6 Broadway Viaduct in Council Bluffs BRF-006-1(113)—38-78, Des. No. 210	Decorative roadway light poles on custom deck cantilever pedestals, pier artwork floodlighting
I-29 Ramp at Nebraska Ave in Sioux City IM-NHS-029-6(206)147—03-97, Des. No. 1617	LED wall-mount up-down lights at piers
I-29 over Virginia St./Floyd Blvd at Sioux City IM-NHS-029-6(201)147—03-97, Des. No. 817 IM-NHS-029-6(203)147—03-97, Des. No. 1017	LED wall-mount up-down lights at piers
US 52 over Mill Creek in Bellevue BRF-052-1(70)—38-49, Des. No. 108	Ornamental light poles along trail, spotlights at abutment towers
US 65 over Iowa River in Iowa Falls BRFN-065-6(42)—39-42, Des. No. 110	Ornamental light poles on pedestrian railing pedestals
US 63 over CC&PRR in Waterloo NHSX-063-6(75)—3H-07	Light poles with banners on cantilevered barrier pedestals above MSE retaining wall
US 20/US 151 and Southwest Arterial interchanges in Dubuque; NHSX-032-1(42)—3H-31, Des No. 617; NHSX-032-1(40)—3H-31	Decorative lighted pier lanterns, decorative truss floodlighting (all LED fixtures)
I-35 over 1st Avenue (DDI) in Ankeny IM-NHS-035-4(196)92—03-77	Wall-mount lights at piers, barrier light fixtures for central pedestrian path through DDI
Edgewood Road over IA 100 in Cedar Rapids NHSX-100-1(66)—3H-57, Des. No. 514	Ornamental light poles on barrier pedestals
US 30 over Boyer River in Woodbine BRF-030-1(147)—38-43, Des. No. 116	Ornamental light poles with banners on barrier pedestals
I-74 over the Mississippi River in Bettendorf IM-NHS-074-1(198)5—03-82, Des. Nos. 617, 717	Color-changing LED lighting for arches, decorative light poles along trail, LED lighting at overlook
IA 3 over the Cedar River in Waverly BRF-003-6(69)—38-09, Des. No. 323	Ornamental light poles

I-80 over IA 146 near Grinnell IM-NHS-080-5(355)183—03-79, Des. No. 520 IM-NHS-080-5(362)183—03-79, Des. No. 122	Pier artwork spotlights, trail underdeck lighting
Pedestrian tunnels (most projects since ca. 2000)	Various barrel and headwall lighting solutions

C9.5.9 Decorative Concrete

C9.5.9.1 General

Table C9.5.9.1 contains examples of precedent projects with decorative concrete treatments.

Table C9.5.9.1 Precedent projects with decorative concrete treatments (incomplete listing)

Example Location	Decorative Concrete Treatments											
	Articulation	Rustication	Texture	Thin brick	Integral color	White concrete	Abrasive blast	Rubbed finish	Decorative insert	Broomed finish	Acid etching	Exposed aggreg.
Dickinson Co., US 71 Okoboji Lakes Bridge & Causeway, FHWA# 23671	X	X			X (MSE)	X						
Polk Co., I-35/I-80 over Merle Hay Rd, FHWA# 41441/41451	X	X			X							
Polk Co. Des. 2201, Douglas Ave over I-35/I-80, FHWA# 41331	X	X										
Polk Co. Des. 704, 42nd St over I-235, FHWA# 42171	X	X								X		
Johnson Co. 102, I-80 over IA 965 (widening), FHWA# 32030/32040	X	X								X		
Van Buren Co. Des. 105, IA 1 over Des Moines River, FHWA# 50181	X	X	X									
Kossuth Co. Des. 107, US 169 over E. Fork Des Moines R., FHWA# 32921	X	X	X									
Jackson Co. Des. 108, US 52 over Mill Creek & CPRR, FHWA# 609770	X	X	X		X (MSE)		X					
Greene Co. Des. 117, US 30 over UPRR and 222nd St, FHWA# 025641	X	X					X		X			
Woodbury Co. Des. 202, 1st Street over I-29, FHWA# 609080	X	X										
Woodbury Co. Des. 1617, I-29 Ramp B over Virginia St, FHWA# 700325	X	X	X	X	X (MSE)				X	X		
Linn Co. Des. 414/1214, IA 100 over Ushers Ferry, FHWA# 70445/70450	X	X	X	X	X (MSE)							
Polk Co. Des. 2002/1125, Living History Farms RCB tunnel extension	X	X	X									
Linn Co. Des. 614, bike trail RCB under Covington Rd		X	X	X								

Story Co. Des. 616, I-35 NB to US 30 WB, FHWA# 700825	X	X		X	X (MSE)			X			X (MSE)	
Wapello Co. Des. 519, West Park Blvd over IA 149, FHWA# 50661	X	X		X				X				
Johnson Co. Des. 1020, Herbert Hoover Hwy over I-80, FHWA# 32161	X	X	X						X			
Linn Co. Des. 321/421, Tower Terrace over I-380, FHWA# 701060/605041	X	X	X	X				X				
Polk Co. Des. 423, NE 126th Ave over I-35, FHWA# 040791	X	X		X				X				
Bremer Co. Des. 323, IA 3 over Cedar River, FHWA# 15571	X			X				X				
Poweshiek Co. Des. 520/122, I-80 over IA 146, FHWA# 46051/46061	X	X		X					X	X		
Allamakee Co. Des. 124, IA 9 over Mississippi River, FHWA# 13521	X	X (MSE)			X (MSE)		X (MSE)					X (MSE)

C9.5.10 Commentary – history of concrete coatings usage by Iowa DOT

The Department has used various concrete coating types for aesthetic purposes on many past projects, primarily on surfaces of bridges and pedestrian tunnels. Important lessons regarding appropriate material, usage, and surface preparation have been learned along the way.

Some bridges received aesthetic coating in the late 1990s. At that time, the DOT had a “Class 3 Surface Finish” in its Standard Specifications that had previously been used only very rarely. Materials meeting this specification were what is known in the painting industry as “texture paint”, which contains cementitious material along with a pigmented acrylic binder. Some bridges were coated with this material without reference to any specific surface preparation method (because the Standard Specifications lacked any), and the results varied widely. Some coatings were successful, probably due to the care in surface preparation that was undertaken by some contractors in accordance with product manufacturer’s recommendations. Other coated projects were much less successful, due at least in part to inadequate or nonexistent surface preparation. Discussions with one contractor indicated that their understanding was that since the Class 3 finish material contained cement, it would stick to concrete under any circumstances. This was clearly not the case, as many bridges coated with this material experienced sloughing of entire sections of the coating, which clearly had little to no bond strength with the substrate. One contractor at the new 50th Street bridge over I-235 (ca 2000) indicated that the only surface preparation that occurred on parts of that bridge’s painting project was a blow-down of the surfaces with compressed air. That was followed by coating application using a spray gun fed by an open hopper full of cementitious finish material on a hot, windy summer day. Most of that coating flaked and fell off those surfaces within the first year.

At that time, MnDOT had more experience with concrete coatings than Iowa DOT, so some Minnesota bridges were visited as references in the search for a remedy or a better specification. Similar coating failures were seen on some bridges in Minnesota when Iowa DOT was experiencing coating problems. A similar cementitious acrylic coating had been used by MnDOT on some bridges. Upon close inspection, a lack of bond strength between the coating and the concrete was also clearly the issue on those bridges.

Iowa DOT decided to perform field testing with the help of a Houston-based painting contractor that was doing remediation work on the 50th Street bridge over I-235 in late summer of 2000. That fall, a bridge painting investigatory project was set up at the existing S. Dayton Avenue PPCB bridge over US 30 due to its proximity to the DOT’s Central Office. The project was meant to inform future bridge painting work that was planned for the entire I-235 corridor involving more than 70 replacement bridges. The investigation included proper surface preparation and application of 3 different material types:

cementitious acrylic coating (texture paint) in accordance with the Class 3 Special Surface Finish; a high-silicone content acrylic sealer proposed by the Houston-based painter, and 100% acrylic emulsion masonry paint.

The concrete surfaces to be coated were pressure washed at 3000 psi and allowed to dry for a minimum of 24 hours. Prior to coating applications, Central Office Materials staff performed testing of the prepared concrete surfaces for pH levels using pencil tests and checked concrete moisture using thin plastic film taped to the surface and left overnight to check for condensation. Presence of sealers was also checked via a water mist test, and none were found. The bridge had been built 8 years earlier in 1992, so pH and internal moisture levels were within coating manufacturer's recommended limits, probably not least due to the age of the concrete and to the generally low humidity air conditions prevalent during the fall season.

Two coats of each of the 3 material types were applied on separate sections of the bridge, with the east elevation (barrier, fascia beams and abutments) receiving the cementitious coating, and the west elevation and the entire pier receiving the high-silicone acrylic sealer. 100% acrylic emulsion paint was used on both elevations for the red accent stripe on the deck edge to verify the material's superior color retention even in bright hues. The different materials were not allowed to overlap on any surface. Materials staff performed pull-off adhesion tests on all 3 materials applied to the bridge. All were found to have excellent adhesion to the concrete, with each test showing failure of the concrete just below the layer of the bond between the concrete and the coating.

One notable difference between the high-silicone sealer and the cementitious coating was how quickly the white-colored texture paint on the east elevation of the Dayton Avenue bridge started to change due to collection of airborne dirt and dust on its slightly textured surface. Color went from pure white to a grayed off-white in just a few months.

Despite the generally acceptable performance of the Class 3 Special Surface Finish cementitious acrylic coating at the Dayton Avenue test site, the high-silicone acrylic sealer was seen as promising the best combination of appearance and longevity for use on the I-235 corridor bridge work. One important factor in the decision was the test's painting contractor's extensive experience in applying this material in Texas, Utah, and New Mexico, where it had reportedly performed very well with no adhesion problems for the many years it had been used on infrastructure projects. The high silicone sealer was expected to have a service life of 15 to 20 years. The Class 3 Special Surface Finish was subsequently abandoned and recommended for removal from the Standard Specifications (which occurred much later but prior to the 2015 release).

As a side note, the Houston-based painting contractor's remediation work at 50th Street over I-235 involved the use of 100% acrylic emulsion paint due to the presence of an existing coating (the cementitious acrylic material). This is because the high-silicone acrylic sealer can only be applied to raw concrete or to an original coat of high-silicone acrylic sealer placed on raw concrete. The cementitious acrylic coating at 50th Street was pressure washed to clean it and remove any loose material and was allowed to thoroughly dry before the acrylic paint was applied as a topcoat over the cementitious coating and over some areas of exposed raw concrete. The resulting coating system overall can be classified as vapor-permeable, though to what degree is unknown.

Since the chosen coating material for the I-235 corridor rebuild project was a concrete sealer that would not allow vapor transmission, it was decided that bridges would not be coated as part of their original construction contracts but would be allowed to weather for at least 2 full years prior to receiving the sealer. This was to ensure that the concrete's internal moisture from initial curing would be fully dissipated, to allow pH levels to become compliant for coating, and to allow any weak surface concrete to spall on its own through seasonal freeze-thaw cycles. Recognition that the Iowa climate is not the same as that in Texas or the desert southwest, this seemed the prudent approach. It was also anticipated that this tactic would be relatively economical since painting-only contracts could bundle multiple adjacent bridges and would not involve any other construction activity besides traffic control. The new coating material became known through the bid item "Colored Sealer Coating for Structural Concrete".

Piers, abutments, deck edges and overhang soffits, and concrete barrier outside surfaces of I-235 overhead and mainline bridges were prepared and coated with the high-silicone content acrylic sealer via controls in the “Developmental Specifications for Colored Sealer Coating for Structural Concrete”. For the original application of this coating on these bridges, plain-water pressure washing at 3000 psi and a rate of 3 to 14 gal./minute was the specified surface preparation method as was used at Dayton Avenue. Tests for moisture, pH levels, and presence of sealers were required to meet specifications prior to coating application. All bridges had weathered in the field for at least 2 years prior to being coated under one of 4 different painting projects that occurred within the 14-mile corridor between 2005 and 2008. Mainline bridges included a stripe of blue paint on the outside face of concrete barriers that was executed in 100% acrylic emulsion paint for the best color retention. Each coating type was applied to raw unpainted concrete and overlapping of the 2 different materials was not allowed.

Despite the precautions of waiting at least 2 years to apply colored sealer coating to the I-235 bridges, coating failures became evident within a few years after application. A 2011 survey of more than 20 bridges coated with colored sealer, most of them on I-235, revealed substantial problems. Coating degradation at deck edges was particularly pronounced on many bridges and represented some of the worst conditions. This is when field staff made us aware of the practice of deck finishing workers throwing screeded, partially dried concrete from the screed toward the form boards at the deck edge, creating inherently weak material in that area. Some abutment mask walls also exhibited pronounced issues. Cracks that had leached efflorescent salts were an issue on some bridges. I-235 bridge piers, which had been constructed with high performance concrete, were assessed as generally good, with most of the aesthetic impact on them identified as road spray soiling.

Upon close inspection of the pieces of coating material that had spalled off I-235 bridge abutments and deck edges, it was clear that most failures did not occur at the bond between the sealer and the concrete, but somewhere below the surface. Most spalls with coating on the front side had remnant cement, sand, and even small aggregate adhered to the back. Very few pieces of inspected coating had clearly failed at the bond layer. Many pop-outs of small to medium sized aggregate from formed vertical surfaces was also highly suggestive. This evidence was deemed to be strong indication of entrapped moisture as the culprit rather than an adhesive failure. It wasn’t necessarily the surface preparation method that was at fault, but the conditions inside the concrete and inherent weaknesses near the surface.

The only exception was at Euclid Avenue over I-235, where it was reported that the north elevation of the bridge may have been damp with overnight condensation when it was coated. Euclid Avenue is the only overhead bridge on I-235 that runs east-west, rather than north-south, and its north elevation would have been especially susceptible to the condensation problem during the morning hours. The adhesive bond between coating and concrete on the outside face of the north barrier most likely failed because persistent moisture on the surface was not allowed to fully dry before painting occurred.

Repainting of I-235 bridges began in 2012 and continued on a near-annual basis until 2022, at which time all bridges that were deemed to exhibit unacceptable coating appearance issues had been repainted. Some 53 bridges had been repainted during this period. Due to the presence of well-adhered colored sealer coating material on many surfaces of the affected bridges, water-only pressure washing was the surface preparation method in accordance with product manufacturer’s recommendations. It would not have been practicable to fully remove the existing material, and deeply abrasive-blasting an adhered coating would not have yielded any better result than the cleaning and top-coating produced. Due to the thermoplastic nature of the sealer, there is no adhesive bond layer between the original and any number of subsequent coats, and if the original coat was well-bonded there was no reason to remove it.

Following the experiences on I-235 bridges and others that received the colored sealer coating, it was prudent for the Iowa DOT to explore other coating types for future projects. Switching to highly breathable coatings seemed to be the proper change in policy, based on our assessment of the entrapped moisture failures seen with the sealer. New coatings with vapor-transmissive characteristics were investigated, including revisiting 100% acrylic emulsion coatings. In 2014 however, it was discovered that a material that had been used on concrete in Europe for over 150 years was finally being marketed by multiple manufacturers and suppliers in the USA: mineral silicate paint. Known informally as “water glass”, this

typically potassium-based mineral paint had projected service life of over 100 years by some accounts. It had been used to paint many multi-color murals and other complicated installations that one would not want to repaint very often, if ever. It also has environmental and sustainability advantages due to its water base and low VOC content. The product is so vapor-permeable, it is possible to use it on new concrete without as much concern about internal moisture as with other coatings. Also a proven concrete penetrant, this material showed real promise as one to try on Iowa projects.

In 2014, the City of Urbandale had a new interchange project under design for 100th Street over I-35/I-80 including a new bridge which would ultimately be owned by the DOT. The bridge was being designed to replicate aesthetic features at the Douglas and Meredith Avenue bridges over the same interstate facility, but those bridges had been color-coated with the sealer product. The 100th Street project looked ideal for Iowa's first use of mineral silicate paint on a bridge. However, this material was reportedly much more expensive per gallon than anything the DOT had used before, so there were some questions related to budgeting if this material were to be specified. It was expected that the overall cost of painting would not substantially increase, because most of the cost of painting is in the associated labor, not the material. Upon the prompting of Iowa DOT Bridges and Structures, City staff agreed to try the mineral silicate paint.

A Special Provisions document was written for the mineral silicate paint usage at 100th Street. The material was required to have 92% vapor transmission in accordance with ASTM E 96. Specified minimum concrete age was just 14 days. Three preapproved manufacturers were listed. Since manufacturer's recommendations for surface preparation were met or exceeded by those in our previous coating DS, they were employed on the project. Water-only pressure washing at 3000 psi and 3 to 14 gal./minute was used, and the surfaces were tested for readiness in accordance with manufacturer's recommendations.

For the year prior to the December 2015 letting for 100th Street, colored sealer coating averaged $74/SY. The awarded price for mineral silicate paint work at 100th Street was just $24/SY, with 2 other bids of $75/SY and $71/SY for an average of $57 for this "new" material. Clearly its higher per-gallon price had no effect on the overall cost of painting a bridge. That fact continued to be borne out in subsequent project lettings that included mineral silicate paint. The applied results in the field at 100th Street were exemplary, as well, and the painting contractor had no complaints about using the material.

After I-235 it was also prudent for our standard coating surface preparation method to become more aggressive so that as-cast concrete surface weaknesses could be reduced or eliminated prior to coating application, even if highly breathable coatings were to be the new standard. A new DS for Concrete Surface Preparation and Testing Prior to Coating Application was created under the 2015 Standard Specifications. It included a critical change from water-only pressure washing of concrete surfaces to a combined sand- and water-blast surface preparation method in accordance with International Concrete Repair Institute (ICRI) recommendations. This was expected to ensure that weak surface concrete zones would be removed before any coating was applied. Greater depth of surface profile and removal of polished zones (especially on precast beam faces) for better paint adhesion was also seen as an improvement over pressure washing.

An entirely separate DS for Structural Concrete Coating was created to cover the application of the coating, but paint material type would be handled by plan notes on all future projects. Keeping the DSs free of listed products meant that they wouldn't need updating as new manufacturers and products became available. If necessary, preapproved products could be listed in the MAPLE associated with a DOT Materials I.M., as they ultimately would be for mineral silicate paints under I.M. 482.12.

With the success at the 100th Street project, the switch was made to mineral silicate paint as the preferred aesthetic coating for material applied with the original bridge construction contract. The next bridge to receive mineral silicate paint under a State project was Morningstar Drive over I-35/I-80 east of the 100th Street interchange, aka. Polk Co. Design No. 1317. Then the delayed painting work at the Council Bluffs Interchange System (CBIS) was developed, where multiple bridges were packaged into several standalone bridge painting projects that exclusively used mineral silicate paint. A similar delayed

painting project took place on 4 bridges in the IA 100 corridor near Cedar Rapids in 2019 using mineral silicate paint.

Other coatings were used during this same period. At US 461 over IA 22 in Davenport, Scott Co. Design No. 318, 100% acrylic emulsion paint was used so that the DOT would have other breathable coating types on the system that could provide more information regarding paint performance over time. The Dayton Avenue bridge was repainted in 2018 to color match the new I-35 interchange bridge work in progress at the time, and all 3 original coating types were again used to recoat the bridge for consistency. At the new tunnel under US 63 in Waterloo, Black Hawk Co. Design No. 1315, high-silicone acrylic sealer was used on tunnel interior walls because of high future graffiti potential due to extant problems in the immediate area, and the sealer could be more easily top-coated rather than pressure-washed or scrubbed as remediation. The development of new DOT pedestrian tunnel standards was also underway at this time, and it was decided that 100% acrylic emulsion paint would be used to lighten the barrel interiors, with anti-graffiti coating used as a standard topcoat.

More recent aesthetic bridge projects indicate a dedicated trend toward painting of accent surfaces rather than the entirety of exposed substructure, beam, and barrier surfaces. The painting work at the bridges in the CBIS exemplify this, as do such projects as the IA 100 corridor bridges, the US 30 bridge over UPRR at Grand Junction, the Tower Terrace Road DDI bridges over I-380 at Cedar Rapids, the I-80/I-380 interchange project, the US 30 Mount Vernon-Lisbon Bypass, the Herbert Hoover Highway bridge over I-80 near Iowa City, County Road S14 over US 30 near Nevada, and IA 3 over the Cedar River at Waverly. In many cases, only the fascia precast beams received concrete coating. Some projects combined painted fascia beams with integral thin veneer brick for color in the substructure and barrier faces. Other recent aesthetic bridge projects such as at the NB I-35 to WB US 30 Ramp H near Ames, 580th Street over US 30 near Ames, and the I-35 Ankeny to Ames Monarch Highway corridor bridges employ no concrete coatings at all but rely solely on integral thin brick for their color accents. And again, edges of bridge decks are never painted on DOT projects due to the suspected inherent weakness of those surfaces.

~~~
~~~

technique. Our improved specification better ensures that any weak surface concrete is removed and therefore cannot spall and expose raw concrete after being painted with a breathable coating. This aggressive blasting also serves to increase surface profile of the concrete for improved adhesion. Mineral silicates are better suited to new concrete than the sealers, so there are fewer concerns about achieving low internal moisture levels prior to painting.

To date, we haven't experienced any of the kinds of performance problems in the breathable coatings that we had with the sealers. We are confident that these materials will continue to perform well throughout the expected service life of the few structures that receive this treatment annually. Concrete painting is now typically limited to fascia beam and accent surfaces, rather than entire pier, abutment, and barrier faces as on I-235. Bridgework in the I-80/I-380 Interchange and in the Council Bluffs Interstate System interchanges exemplify this new design approach. Some enhancement projects, such as the new overhead bridges along I-35 from Ankeny to Ames, receive no coatings at all, but rely on other sustainable means of incorporating color such as integral thin veneer brick treatment.

~~~
~~~

The Okoboji specification performed satisfactorily as a control over the steel railing surface preparation and painting work, though there were some issues associated with the required maximum time that was allowed to elapse between the galvanizing and the preparation/painting. Separate facilities performed these two tasks on the assemblies, and there was physical distance between them that challenged the contractor's ability to meet the specification due to trucking time. The galvanizer was essentially forced to galvanize and ship small portions of the job at a time, rather than completing the job and shipping all assemblies at once, which would have been more economical for them. They may not have anticipated this while preparing their bid, so there were some complaints.

Duplex painting on the Okoboji railings yielded a satisfactory result on the completed project, at least initially. That initial success led to additional projects using the same specifications for painting galvanized steel products. Some of the first bridge replacements on I-235 included the SP for painted pedestrian railings and steel-on-concrete traffic railings.

After some years of service, it became apparent that the durability of the epoxy/polyurethane paint system specified in the duplex system SP was not meeting expectations. Fading and chalking were evident, but flaking of the entire coating from the substrate was the greatest concern. There were questions about whether the galvanizers were restricting their use of water quenching and chromate conversion coating, as these procedures had clearly been identified as impediments to proper topcoat adhesion. DOT Materials staff made inquiries with galvanizers, but records of those contacts and any discoveries made have not been found for inclusion in this summary.

Paint failures were noted at the Okoboji project and on the first I-235 overhead bridge at 50th Street in West Des Moines. In some instances, the entire 2-coat paint system had de-bonded from the galvanized surface in large flakes. The paint was characterized as being very brittle, and additional partially-bonded paint was easily delaminated by slipping the edge of a tool underneath the paint. The bond was poor, and the characteristics of the paint itself seemed to intensify the problem. Some failures could be characterized as handling damage, and the pressure placed on the paint by adjacent assemblies or blocking during shipping appeared to have been the initial cause of some paint surface fracturing. Problems with the same characteristics were seen on other DOT projects that used the epoxy/polyurethane system, including where it had been used to paint galvanized chain link fence post assemblies for structure-mounted fencing.

Another problem was particularly evident in the blue paint used on I-235 railings: severe UV fading. The same problem occurred with the blue paint used on the superstructure steel arch of the first I-235 pedestrian bridge replacement near the Des Moines Botanical Center. It was later discovered by DOT Materials staff in consultation with KTA Tator that the types of paint the DOT was using had an inappropriate pigment vehicle in the paint's chemical structure for the bright color used. The pedestrian bridge was ultimately repainted in situ with high-performance fluoropolymer paint to correct the problem and to improve UV fading resistance during remaining service, and the 2 subsequent steel arch pedestrian bridges were shop-painted with fluoropolymer systems to avoid the problem suffered by the first bridge.

The DOT's duplex system SP became Supplemental Specification SS-01025, first issued in 2003. It continued to list the epoxy/polyurethane paint systems originally specified. Applications of this paint type continued until the serious adhesion and fading problems were identified on I-235 bridge railings that had seen several years of service. In 2008, a bridge maintenance project was undertaken to field repair and repaint the steel railings on 19 I-235 bridges using high-performance fluoropolymer paint. Special notes were developed to cover the surface preparation and repainting procedures. Since only portions of the in-place pedestrian railings were painted as part of their design, with surrounding surfaces galvanized-only, extensive masking was required to avoid adjacent surface contamination.

The painted steel traffic railing (the upper portion of the MnDOT Type 3 Combination rail used primarily on I-235 overhead bridges) at the I-235 mainline bridges over the Des Moines River has suffered the most extensive damage during its service life than other such installations within the corridor. These railings were repainted with 3-coat fluoropolymer paint as part of the 2008 maintenance project, but

repeated high-speed vehicle strikes and routine snowplow scraping have taken their toll on all layers of the duplex coating system. Some deep scrapes and gouges through the galvanizing have caused the steel to corrode, and this is likely to be accelerated by chemical action from road salt spray. Painting is strongly discouraged for future steel traffic railings intended for service in similar conditions. By contrast, the identical rail type was installed on two curving ramp bridges at the I-35 and Iowa 5 interchange but with unpainted galvanized finish. Those installations, while having required some touch-up of the galvanizing throughout service, have fared much better and do not have the negative appearance effects of deep paint scratches and scrapes.

A problem related to both unpainted and painted galvanized surfaces was also found on some I-235 railings. Areas of mill scale on some steel components was not being adequately removed by standard surface preparation practices prior to galvanizing. It was decided that the following note would be included in all future plans for plain or painted galvanized steel railings: Prepare the fabricated railing surfaces by abrasive blast cleaning to a minimum of SSPC SP-6 “Commercial Blast Cleaning” prior to hot-dip galvanizing.

Supplemental Specification SS-01025 became Iowa DOT Standard Specification Section 2509 with the publication of the 2009 edition. However, given the troubles experienced with the epoxy/polyurethane paints, many projects that included duplex coated railings were already using polyester powder coating as the preferred topcoat instead of paint.

The first powder-coated, duplex system-finished bridge railing that the DOT was made aware of was used at the Dayton Avenue over UPRR bridge in Ames, ca. 2003. Even though this was a Local Systems project, DOT staff had an opportunity to comment on the specifications used to control the duplex coating work, and then to observe the results. While the overall finish quality was very good, some minor coating condition issues were identified. Upon very close inspection, some areas of the powder coating exhibited pin-holing, which is typically attributed to off-gassing of the galvanized surface during the topcoat baking process that follows electrostatic powder application in the shop. Investigation into the topic revealed that it is ideal to include specification of “de-gassing grade” polyester powder to reduce the pin-holing potential when coating galvanized steel. The pin-holing seen on the Dayton Avenue example was not expected to have any long-term effect on coating performance and was very difficult to see from normal viewing distances.

The Iowa DOT’s first powder-coated duplex system-finished bridge railing occurred at the US 65 bridge over the Iowa River in Iowa Falls, ca. 2010. Instead of referencing Standard Specification Section 2509, which still called for the 2-coat epoxy/polyurethane paint associated with the early performance problems, surface preparation was specified in the plans to be in accordance with ASTM D 6386 and with Iowa DOT Materials I.M. 568. The powder coating material and application requirements were entirely controlled by I.M. 568 and plan notes. Other than minor installation touch-up and slight gloss changes over time, no coating performance issues have been experienced to date.

More recent projects that include powder-coated galvanized railings did not reference ASTM D 6386 but relied entirely on I.M. 568 to control both surface preparation and application. Approved powder coating shops are listed in the MAPLE.

Custom, powder-coated duplex system-finished pedestrian railings were used at the following locations (list not comprehensive):

- Linn Co. Design 915, E Ave over IA 100, Cedar Rapids, FHWA #700610
- Linn Co. Design 514, Edgewood Blvd over IA 100, Cedar Rapids, FHWA #700455
- Johnson Co. Design 2417, Forevergreen Rd over I-380, North Liberty, FHWA #600431
- Johnson Co. Design 220, S. Park Rd (Jasper Ave) over I-80, Tiffin, FHWA #31981
- Linn Co. Design 321, Tower Terrace Road over I-380, Cedar Rapids, FHWA #701060
- Franklin Co. Design 120, US 65 over Squaw Creek, Hampton, FHWA #25111
- Wapello Co. Design 519, West Park Blvd over IA 149, Ottumwa, FHWA #50661
- Johnson Co. Design 1020, Herbert Hoover Highway over I-80, Iowa City, FHWA #32161

- Scott Co. Design 222, US 461 NB over Duck Creek, Davenport, FHWA #46941
- Dubuque Co. Design 323, Grandview Ave over US 61, Dubuque, FHWA #23951
- Webster Co. Design 124, IA 926 over Des Moines River, Fort Dodge, FHWA #52081
- Webster Co. Design 224, IA 926 over CCPRR and 7th St SW, Fort Dodge, FHWA #52102
- Bremer Co. Design 323, IA 3 over the Cedar River, Waverly, FHWA #15571

Most projects involving structures with vinyl coated chain link fence since ca. 2012 have also employed powder coating over galvanizing for the fence post assemblies.

Custom, unpainted galvanized pedestrian railings were used at the following locations (list not comprehensive):

- Woodbury Co. Design 402, 1st St over I-29, Sergeant Bluff, FHWA #609080
- Polk Co. Design 115, NW Beaver Dr over I-35/I-80, Des Moines, FHWA #700420
- Jefferson Co. Design 1702, Cedar View Trail over US 34, Fairfield, FHWA #609805
- Clay Co. Design 106, US 18/US 71 over Little Sioux River, Spencer, FHWA #20331
- Polk Co., US 6 over the Des Moines River in Des Moines, FHWA #40400
- Van Buren Co. Design 106, IA 2 over the Des Moines River, Farmington, FHWA #50271
- Van Buren Co. Design 114, IA 98 over Des Moines River, Douds, FHWA #50381
- Kossuth Co. Design 107, US 169 over E. Fork of Des Moines River, Algona, FHWA #32921
- Woodbury Co. Design 1711, Wesley Pkwy over I-29, Sioux City, FHWA #700200
- Woodbury Co. Design 1811, Wesley Pkwy over Tri-View Avenue, Sioux City, FHWA #700205
- Polk Co. Design 125, IA 28 SB over the Raccoon River, West Des Moines, FHWA #3825

Unpainted galvanized steel traffic railings have been used at the following locations (list not comprehensive):

- Polk Co. Design 100, IA 5 WB to I-35 SB Ramp B, West Des Moines, FHWA #608230
- Polk Co. Design 200, I-35 SB to IA 5 EB Ramp C, West Des Moines, FHWA #608240
- Hardin Co. Design 199, US 20 over the Iowa River, Steamboat Rock, FHWA #608350
- Van Buren Co. Design 114, IA 98 over Des Moines River, Douds, FHWA #50381
- Linn Co. Design 114, IA 100 over the Cedar River, Cedar Rapids, FHWA #700375
- Story Co. Design 616, I-35 NB to US 30 WB Ramp H, Ames, FHWA #700825
- Des Moines Co. Design 117, SB US 61 over Flint Creek, Burlington, FHWA #700760
- Des Moines Co. Design 217, NB US 61 over Flint Creek, Burlington, FHWA #023491
- Scott Co. Design 1108, 53rd St over I-74, Davenport, FHWA #47371
- Scott Co. Design 617, I-74 WB over Mississippi River, Bettendorf, FHWA #47281
- Scott Co. Design 717, I-74 EB over Mississippi River, Bettendorf, FHWA #47291
- Polk Co. Design 125, IA 28 SB over the Raccoon River, West Des Moines, FHWA #3825
- Allamakee Co. Design 124, IA 9/WI 82 over the Mississippi River, Lansing, FHWA #13521

Weathering steel has also been explored on some projects as an option for adding color to pedestrian railings and eliminating coating requirements. Material availability must be checked for the steel shapes required by the design, and the possibility of higher material cost should be considered against traditional coated steel material options. Weathering steel was employed for pedestrian railings at the following locations:

- Jackson Co. Design 108, US 52 over IC&E RR and Mill Creek, Bellevue, FHWA #609770
- Des Moines Co. Design 117, SB US 61 over Flint Creek, Burlington, FHWA #700760

Other steel railing and steel accessory coatings have been used on some projects in Iowa. For example, a Local Systems project at Des Moines' Southeast Connector (now MLK Jr Pkwy) over the Des Moines River employed a high-performance paint system controlled through Special Provisions SP-011181, ca. 2007. The precise details of the system used on the project were not archived by Iowa DOT and were not available for this summary. It is believed to be a duplex system based on Iowa DOT SS-01025 but with a 3-coat high-performance paint classified as a thermoset solution fluoropolymer. A 15-year warranty period on the finish was required as part of the SP. As of 2024, the coating appears to be performing well,

although some corrosion can be seen on expanded metal lath material (part of the canopies over trails near the abutments) that was painted. Surface preparation of this material may have been difficult to properly perform due to its intricate surface characteristics.

In Sioux City at Wesley Blvd over I-29 and at I-29 over Pierce Street, bridge abutment accent towers included metal roof features. The Special Provisions for the metal roof panels (developed ca. 2011) indicated factory pre-finishing using a fluoropolymer of polyvinylidine fluoride (PVDF) with 2 preapproved coating systems listed (Kynar 500 PVDF and Hylar 5000 PVDF). Use of these systems is highly specialized to the prefabricated metal roofing industry and is not a practicable option for coating of other types of traditionally shop-fabricated steel assemblies.

TABLE OF CONTENTS ~ SIGN SUPPORT STRUCTURES

Note that this section is based on both the 2013 AASHTO *Standard Specifications for Structural Supports for Highway Signs, Luminaires, and Traffic Signals,* 6th Edition (allowable stress design) and the 2015 AASHTO *LRFD Specifications for Structural Supports for Highway Signs, Luminaries, and Traffic Signals,* 1st Edition.

10.2 Sign Support Structures
- 10.2.1 General
  - 10.2.1.1 Policy overview
  - 10.2.1.2 Design information
  - 10.2.1.3 Definitions
  - 10.2.1.4 Abbreviations and notation
  - 10.2.1.5 References
- 10.2.2 Loads
  - 10.2.2.1 Dead
  - 10.2.2.2 Live
  - 10.2.2.3 Ice
  - 10.2.2.4 Wind
  - 10.2.2.5 Fatigue
- 10.2.3 Load combinations and application to signs and supports
- 10.2.4 Analysis and design
  - 10.2.4.1 New structures
    - 10.2.4.1.1 Steel
    - 10.2.4.1.2 Aluminum
  - 10.2.4.2 Existing structures
    - 10.2.4.2.1 Overhead bridge-type sign truss review
    - 10.2.4.2.2 Overhead cantilever-type sign truss review
    - 10.2.4.2.3 Bridge-mounted sign support structure review
- 10.2.5 Detailing
- 10.2.6 Shop drawings
- 10.2.7 Structures and components
  - 10.2.7.1 Overhead bridge-type sign trusses
  - 10.2.7.2 Overhead cantilever-type sign trusses
  - 10.2.7.3 Roadside dynamic message sign support structures
  - 10.2.7.4 Runways and ladders
  - 10.2.7.5 Bridge-mounted sign supports
  - 10.2.7.6 Foundations

10.2 Sign Support Structures

This series of articles replaces previous Bureau documents for overhead sign truss design criteria.

In the following articles [AASHTO-LTS-6 article, table, or figure] refers to the 2013 AASHTO *Standard Specifications for Structural Supports for Highway Signs, Luminaires, and Traffic Signals,* 6th Edition. [AASHTO-LRFDLTS-1 article, table, or figure] refers to the 2015 AASHTO *LRFD Specifications for Structural Supports for Highway Signs, Luminaries, and Traffic Signals*, 1st Edition. The Bureau generally follows the AASHTO sign support specifications but modifies some provisions based on experience and local fabricating practice.

10.2.1 General

In the past, highway sign support structures usually were designed by the Bridges and Structures Bureau (BSB). Currently these structures are designed by consulting engineers with BSB oversight. As much as possible, the Bureau has developed standard plans, which then can be used by the Traffic and Safety

Bureau for typical projects. Past standards have included both aluminum and steel components but, because of fatigue concerns, the Bureau now uses all-steel structures.

The Bureau currently utilizes the following types of sign support structures:

- Overhead bridge-type sign trusses (BSB SS SOST-01-11 to SOST-21-11 which includes trusses for dynamic message signs (DMS)),
- Overhead cantilever-type sign trusses (BSB SS SCST-01-17 to SCST-09-17),
- Roadside DMS supports (BSB SS RDMS-01-13 to RDMS-06-13),
- Bridge-mounted sign supports, and
- Barrier-mounted sign supports

When signs on existing support structures are updated, the Traffic and Safety Bureau submits the changes for review by the Bridges and Structures Bureau.

10.2.1.1 Policy overview

The design of sign support structures has changed in recent years for several reasons. In the 1994 AASHTO sign specifications there was little information on fatigue design other than reference to the AASHTO *Standard Specifications for Highway Bridges*, but since 2001 the sign specifications have had detailed fatigue requirements that may control the design. The 2001 sign specifications required detailed fatigue design only for overhead cantilever-type sign trusses, but then the 2009 sign specifications extended those requirements to overhead bridge-type sign trusses. The detailed fatigue requirements are more favorable for steel than for aluminum, allowing significantly larger stresses for steel connections.

Increases in required lettering sizes and the amount of information to be communicated has necessitated larger signs. In 2000 the Bureau designed standard overhead sign structures for signs 10 or 12 feet tall, but currently there sometimes is need to design for signs over 20 feet tall. Another trend that has affected design is the state program to construct a network of dynamic message signs (DMSs) throughout the state supported on overhead bridge-type sign trusses, as well as on roadside supports.

The Bureau typically designs overhead bridge-type sign trusses in a four-chord box truss configuration with galvanized steel pipe or hollow structural sections. The trusses generally are sized for center-to-center chord spacings of 5 feet horizontal by 6 feet vertical. The overhead trusses are based on a Warren configuration on all four sides, with panel points at 5 feet along the length and an internal diagonal at each set of panel points. For ease of shipping and galvanizing, the trusses are designed with separate sections 20 to 40 feet long bolted together at chord splices.

Researchers at the Bridge Engineering Center at Iowa State University have tested a corroded and damaged galvanized steel overhead bridge-type sign truss, and researchers at Purdue University have tested two damaged aluminum overhead bridge-type sign trusses [BDM 10.2.1.5]. All of the testing has indicated that the Warren, four-chord configuration is robust. Typical trusses will not deflect excessively or fail to carry design loads, even with noticeable corrosion or fatigue damage to one chord.

Past sign truss inspections have indicated that aluminum overhead bridge-type trusses supporting DMS cabinets have a larger percentage of cracked connection welds than trusses supporting static signs. Many of the fractures are at redundant internal diagonals. Examination of the fractures suggests poor fabrication rather than fatigue.

Due to changes in the AASHTO sign specifications, the need for larger signs, the need to design for fatigue, and the apparently poor performance of aluminum trusses carrying DMSs, the Bureau no longer permits the use of new aluminum sign support structures without approval of the Chief Structural Engineer. With few exceptions, standards for 50- to 130-foot span galvanized steel overhead bridge-type sign trusses (BSB SS SOST-01-11 to SOST-21-11) are currently used for both static signs and dynamic message signs. Standards for 30- to 40-foot span galvanized steel overhead cantilever-type trusses (BSB SS SCST-01-17 to SCST-09-17) also are used for static signs. Due to vibration and fatigue concerns, a DMS placed in an overhead position must be supported on a steel bridge-type truss unless permission is

granted by the Chief Structural Engineer to place the DMS on a steel cantilever-type truss. To meet AASHTO sign specification fatigue resistance requirements and make fabrication easier, the preceding structures are to be fabricated with gusset-and-slotted-pipe connections.

The Bureau requires a vertical clearance of 17.5 feet below the bottom edge of the sign support angles attached directly to the sign panels. This clearance is one foot more than that for typical bridge overpasses. Bureau guidelines for zone of intrusion can be found in BDM 3.14. The Bureau prefers that static signs and DMSs be centered vertically on a sign support structure so that wind will not cause a significant torsional moment about a horizontal axis.

The Bureau standard sign structure plans show foundations for overhead bridge-type sign trusses consisting of a stem wall on a spread footing and foundations for overhead cantilever-type trusses consisting of a pedestal on a spread footing. For poor soil conditions, locations above utility lines, and other special site conditions the office prefers steel H-piles with footings instead of drilled shafts. Drilled shaft foundations may be used only with permission of the supervising Unit Leader.

Due to potential fatigue damage from traffic vibrations, overhead cantilever-type sign support structures shall not be located on highway bridges. The Bureau also strongly recommends that overhead bridge-type sign support structures not be located on highway bridges but, if a sign support structure must be located on a bridge, the structure shall be located at or very near a pier.

Although the Bureau no longer needs to add outriggers to sign trusses for lights that provide night-time illumination of signs, the Bureau does provide runways and ladders for service of overhead DMSs. These service aids need to be considered in the loading of a DMS support structure, and they need to be planned with respect to Occupational Safety and Health Administration (OSHA) rules and security needs.

The Bureau makes limited use of bridge-mounted sign supports (i.e., supports for signs that supply traffic information to motorists traveling on the roadway that passes under the bridge). Due to concerns about adhesive anchors in sustained tensile-load applications, extreme care should be taken when this anchor type is utilized to mount sign supports on the side of an overhead bridge. When designing adhesive-anchor attachments, designers shall follow the recommendations in 2018 FHWA Technical Advisory T5140.34 *Use and Inspection of Adhesive Anchors in Federal-Aid Projects*. Designers also shall explicitly require that (1) the adhesive anchor installer hold current ACI Adhesive Anchor Installer Certification credentials and (2) the anchor installation be performed in the presence of an inspector with current ACI Post-Installed Concrete Anchor Installation Inspector Certification credentials.

10.2.1.2 Design information

The Traffic and Safety Bureau determines the need for signing on the state highway system and establishes sign sizes and locations. When standard plans and specifications for sign support structures do not cover given situations, the Bridges and Structures Bureau either approves standard plans with exceptions or specially designs the supports. For approving new signs on existing overhead structures, the Bureau has a relatively simple checking procedure covered in subsequent articles [BDM 10.2.4.2 – 10.2.4.5].

For use of standard spread footing foundations for overhead sign support structures, the soil is assumed to have a net allowable soil bearing pressure (for settlement) of 2.0 ksf or greater. Generally, the locations of spread footing foundations are within the prepared base for the highway where soils have reasonable capacity, and no specific soil information is needed. However, in the following cases the designer shall consult with the Design Bureau Soils Design Unit:

- Spread footing foundations need to be placed where there is uncertainty regarding soil capacity (e.g., at a location in or near a river floodplain),
- Spread footing foundations need to be located farther than usual from the roadway,
- Foundation footings need to be placed on piles, or
- Structures need to be placed on drilled shaft foundations.

10.2.1.3 Definitions

Reserved

10.2.1.4 Abbreviations and notation

[AASHTO-LTS-6 3.3, 3.8, 5.3, 5.10, 6.2, 6.4, 11.6; AASHTO-LRFDLTS-1 3.3, 3.8, 5.3, 5.10, 5.12, 6.3, 6.5, 6.7, 11.6]

AA, Aluminum Association
ACI, American Concrete Institute
AISC, American Institute of Steel Construction
API, American Petroleum Institute
ASTM, American Society of Testing and Materials
$\mathbf{C_d}$**,** drag coefficient [AASHTO-LTS-6 3.8.6, AASHTO-LRFDLTS-1 3.8.7]
CRSI, Concrete Reinforcing Steel Institute
DMS, dynamic message sign, also called changeable message sign (CMS) or variable message sign (VMS)
G, gust effect factor [AASHTO-LTS-6 3.8.5, AASHTO-LRFDLTS-1 3.8.6]
$\mathbf{I_F}$, fatigue importance factor [AASHTO-LTS-6 11.6, AASHTO-LRFDLTS-1 11.6]
$\mathbf{I_r}$, wind importance factor [AASHTO-LTS-6 3.8.3]
k, effective length factor for a compression member [AASHTO-LTS-6 5.10, 6.4; AASHTO-LRFDLTS-1 6.5, 6.7]
K, effective length factor for a compression member [AASHTO-LRFDLTS-1 5.10, 5.12]
$\mathbf{K_d}$, (wind) directionality factor [AASHTO-LRFDLTS-1 3.8.5]
$\mathbf{K_z}$, height and exposure factor [AASHTO-LTS-6 3.8.4, AASHTO-LRFDLTS-1 3.8.4]
L, unbraced length of a compression member [BDM 10.2.4.1.1]; span length [BDM 10.2.4.1.2]
MRI, mean recurrence interval [AASHTO-LRFDLTS-1 3.8]
OSHA, Occupational Safety and Health Administration
r, radius of gyration [AASHTO-LTS-6 5.3, 6.2, AASHTO-LRFDLTS-1 5.3, 6.3]
V, basic wind speed [AASHTO-LTS-6 3.8.2, AASHTO-LRFDLTS-1 3.8.2]
$\Delta_{\mathbf{Beam}}$, deflection of a beam with the moment of inertia of the truss chord configuration
$\Delta_{\mathbf{DL}}$, dead load deflection at midspan
$\Delta_{\mathbf{Truss}}$, approximate deflection of the truss

10.2.1.5 References

Aluminum Association (AA). *Aluminum Design Manual.* Washington: The Aluminum Association, Inc., 2020.

American Association of State Highway and Transportation Officials (AASHTO). *Standard Specifications for Structural Supports for Highway Signs, Luminaires, and Traffic Signals,* 6th Edition. Washington: AASHTO, 2013.

American Association of State Highway and Transportation Officials (AASHTO). *LRFD Specifications for Structural Supports for Highway Signs, Luminaires, and Traffic Signals*, 1st Edition. Washington: AASHTO, 2015.

American Institute of Steel Construction (AISC). *Hollow Structural Sections Connections Manual.* Chicago: American Institute of Steel Construction, Inc., 1997.

American Institute of Steel Construction (AISC). *Steel Construction Manual,* 15th Edition. Chicago: American Institute of Steel Construction, Inc., 2017.

American Society of Civil Engineers (ASCE). *Minimum Design Loads and Associated Criteria for Buildings and Other Structures, ASCE/SEI 7-16.* Washington: ASCE, 2017.

American Welding Society (AWS). *Structural Welding Code—Aluminum, AWS D1.2/D1.2M:2014.* Miami: AWS, 2014.

American Welding Society (AWS). *Structural Welding Code—Steel, AWS D1.1/D1.1M:2020.* Miami: AWS, 2020.

Bridge Engineering Center. *Report on Evaluation of Interstate 80 Sign Truss.* Ames: Center for Transportation Research and Education, Iowa State University, 2002.

Connor, Robert J. *Final Report for Load Testing and Evaluation of Aluminum Sign Trusses in the State of Iowa.* West Lafayette: Department of Civil and Environmental Engineering, Purdue University, 2011.

Dirks, Kermit and Patrick Kam. *Foundation Soils Information Chart, Pile Foundation*. Ames: Iowa Department of Transportation, Office of Road Design, January 1989/September 1994.

Federal Highway Administration (FHWA). Technical Advisory T5140.34: *Use and Inspection of Adhesive Anchors in Federal-Aid Projects*. Washington: FHWA, 2018.

Letchford, C.W. “Wind loads on rectangular signboards and hoardings,” *Journal of Wind Engineering and Industrial Aerodynamics*, Vol. 89, 2001, pp 135-151.

New York State Department of Transportation (NYSDOT). *Overhead Sign Structure Design Manual.* Albany: NYSDOT, 2008.

Sharp, Maurice L. *Behavior and Design of Aluminum Structures.* New York: McGraw-Hill, Inc., 1993.

10.2.2 Loads

10.2.2.1 Dead

[AASHTO-LTS-6 3.5, AASHTO-LRFDLTS-1 3.5]

The dead load (designated as permanent load in AASHTO-LRFDLTS-1) shall include all permanent parts of the structure; all attachments such as signs, runways, and ladders; and temporary dead loads during maintenance [AASHTO-LTS-6 3.5, AASHTO-LRFDLTS-1 3.5].

Weight of a typical aluminum sign panel with back framing, not exceeding 20 feet tall may be taken as 6 psf. (This weight assumes the use of vertical steel L6 x 3½ x ½-inch sign support angles horizontally spaced at 4 ft on center and excludes the weight contribution of sign-support-angle-to-truss-chord connections.) The designer shall determine the unit weight of taller aluminum signs with back framing and signs of other materials with framing.

The designer shall determine and use the actual weight of dynamic message signs (DMSs) and other special sign types.

The designer should note that a runway for service of a DMS has significant weight. The runway may weigh nearly as much per foot of length as a DMS.

10.2.2.2 Live

[AASHTO-LTS-6 3.6, AASHTO-LRFDLTS-1 3.6]

For the typical unlighted overhead bridge-type and cantilever-type sign truss there is no runway or platform, and therefore no live load.

In cases where a runway or platform is attached to an overhead sign truss, a single 500 lb load shall be applied to each runway or platform member, distributed transversely over 2 feet [AASHTO-LTS-6 3.6,

AASHTO-LRFDLTS-1 3.6]. The live load also shall be applied for design of the connections to the overhead sign truss structure but need not be applied to the truss structure itself because the design group load combinations [BDM 10.2.3] will ensure adequate strength for the temporary live load.

10.2.2.3 Ice

[AASHTO-LTS-6 3.7, AASHTO-LRFDLTS-1 3.7]

For designs using AASHTO-LTS-6, an ice load of 3 psf [AASHTO-LTS-6 3.7] shall be applied to the following:

- The entire surface of each member and gusset plate in a sign support structure,
- One side of ordinary signs,
- The top, ends, and one face of a DMS,
- The nominal plan area (neglecting openings) of a runway grate, and
- The entire surface of runway rails, runway supports, and ladder members.

For designs using AASHTO-LRFDLTS-1, ice load need not be applied as it has been determined that ice and wind on ice do not practically control the critical load effect [AASHTO-LRFDLTS-1 C3.7].

10.2.2.4 Wind

[AASHTO-LTS-6 3.8.1, 3.8.3, 3.8.6, 3.9.3; AASHTO-LRFDLTS-1 3.8.1, 3.8.7, 3.9.3]

Design wind pressure in the AASHTO sign specifications is determined as the product of several factors.

For designs using AASHTO-LTS-6, the design wind pressure is computed using:

$P_z = 0.00256K_zGV^2I_rC_d$ (psf) [AASHTO-LTS-6 Eq. 3.8.3-1]

For designs using AASHTO-LRFDLTS-1, the design wind pressure is computed using:

$P_z = 0.00256K_zK_dGV^2C_d$ (psf) [AASHTO-LRFDLTS-1 Eq. 3.8.1-1]

In most cases the basic height and exposure factor, K_z = 1.00 will suffice, but when signs taller than 20 ft are placed on an overhead sign truss or a sign truss is located near or on a highway bridge, the designer needs to check the maximum sign elevation with respect to the surrounding ground or water level. The height and exposure factor may need to be increased, which will result in a design wind pressure increase.

For structures on the state highway system the wind importance factor, I_r, shall be taken as 1.00 when using AASHTO-LTS-6 [AASHTO-LTS-6 3.8.3]. This I_r value of 1.00 corresponds to a minimum structural design life of 50 years.

AASHTO-LRFDLTS-1 does not use a wind importance factor, but instead adjusts the basic wind speed, V, according to a mean recurrence interval (MRI) based upon the highway traffic volume and risk category [AASHTO-LRFDLTS-1 3.8, Table 3.8-1]. For structures on the state highway system, the MRI shall be taken as 1700 years for the Extreme I limit state (120 mph basic wind speed) and 10 years for the Service I limit state (76 mph basic wind speed).

The (wind) directionality factor, K_d, accounts for the reduced probability that the design event wind direction aligns with the most aerodynamically vulnerable direction of the sign support structure. When using AASHTO LRFDLTS-1, the designer shall apply an appropriate K_d value to each support structure component (e.g., truss member, column/post) and attached signs (both static signs and DMS cabinets) [AASHTO-LRFDLTS-1 3.8, Table 3.8.5-1]. The directionality factor is not considered in AASHTO LTS-6 but implicitly set as 1.0 for all support structures.

Design wind pressures on sign structure components are dependent on their respective drag coefficients, C_d. The AASHTO sign specifications follow traditional drag coefficients. These coefficients likely will be revised in the future to be consistent with those in the ASCE/SEI-7 standard [BDM 10.2.1.5] and reflect more accurate information obtained through National Cooperative Highway Research Program (NCHRP) Project 15-67: Wind Drag Coefficients for Highway Signs and Support Structures. Currently the Bureau uses the following AASHTO-specified drag coefficients [AASHTO-LTS-6 3.8.6, AASHTO-LRFDLTS-1 3.8.7]:

- Typical signs with aspect ratios of 1.0 to 5.0: 1.2
- DMSs: 1.7
- Unshielded tubular sign structure members: 1.2

When following AASHTO-LTS-6 for typical structures where the weighted-mean average of the sign centroid heights is less than 32.8 feet (10 m) above the roadway, the Bureau has customarily used the following wind pressures determined from a basic wind speed of 90 mph associated with a 50-year recurrence interval:

- Signs: 30 psf
- DMSs: 40 psf
- Unshielded sign structure members: 30 psf

Structures carrying signs with heights exceeding 20 feet, structures with gusset plate connections, and structures elevated above the surrounding ground or water level usually will need to be designed for larger wind loads.

Member shielding in truss frameworks is interrelated with the drag coefficient. In applying the wind pressure to truss members the Bureau has the following policies, which generally give conservative results.

- For wind normal to a truss [AASHTO-LTS-6 3.9.3, AASHTO-LRFDLTS-1 3.9.3], consider members facing the wind on both the front and back of the truss to be loaded. Consider members between front and back that would be hidden in an elevation view and members parallel with the wind to be shielded from wind load.
- Apply normal wind to the sign structure from the back, considering all members in the back face to be loaded and the members in the front face directly behind a sign or DMS to be shielded.
- For wind transverse [AASHTO-LTS-6 3.9.3, AASHTO-LRFDLTS-1 3.9.3], consider the horizontal and vertical members at 5-foot intervals to be loaded and all horizontal and vertical diagonals behind those members to be shielded.

The AASHTO specifications likely will provide more rational guidance for applying wind pressures to shielded truss members sometime after NCHRP Project 15-67 is completed in 2022.

In lieu of rigorously analyzing the effects of wind from any direction, the designer may use the load cases for simultaneous normal and transverse wind loads given in the AASHTO sign specifications [AASHTO-LTS-6 3.9.3, AASHTO-LRFDLTS-1 3.9.3]. The load cases apply to the typical sign support structure with signs in approximately one plane but do not apply to unusual structures with major components oriented in two or different planes. Note that the “basic load” is applied differently in AASHTO-LTS-6 than in AASHTO-LRFDLTS-1. In AASHTO-LTS-6, the single basic load (BL) is based upon wind load effects applied normal to the sign faces. In AASHTO LRFDLTS-1, two separate basic loads are used: BL_n is the basic load for wind load effects applied normal to the plane of the structure and BL_t is the basic load for wind load effects applied transverse to the plane of the structure.

10.2.2.5 Fatigue

[AASHTO-LTS-6 11.6, 11.7.1, 11.9; AASHTO-LRFDLTS-1 11.6, 11.7.1, 11.9]

Design for fatigue in the AASHTO specifications involves use of fatigue design loads to determine nominal stress ranges at member connections in the structure and ensure that those stresses are less than the appropriate fatigue limits for the connection details [AASHTO-LTS-6 11.9, AASHTO-LRFDLTS-1 11.9].

Three types of equivalent static loads are required for overhead structures:

- Galloping [AASHTO-LTS-6 11.7.1.1, AASHTO-LRFDLTS-1 11.7.1.1],
- Natural wind gust [AASHTO-LTS-6 11.7.1.2, AASHTO-LRFDLTS-1 11.7.1.2], and
- Truck-induced gust [AASHTO-LTS-6 11.7.1.3, AASHTO-LRFDLTS-1 11.7.1.3].

All three loads apply to overhead cantilever-type structures, but only natural wind gust and truck-induced gust loads apply to overhead bridge-type structures.

Each of the loads is multiplied by the fatigue importance factor, I_F [AASHTO-LTS-6 11.6, AASHTO-LRFDLTS-1 11.6]. For structures on the state highway system, the designer shall take the fatigue importance factor as 1.00.

The natural wind gust and truck-induced gust loads also depend on the drag coefficient. The designer shall select the drag coefficient and apply shielding using the wind load guidelines in the preceding article [BDM 10.2.2.4].

In determining the nominal stress ranges at a connection, the designer shall add the axial stresses to the combined bending stresses, if the connection is assumed to be rigid. The designer need not separate tension from compression stresses because stresses usually reverse with opposite wind direction or oscillation of the structure.

Under the fatigue design loading and fatigue resistances in the AASHTO sign specifications, the design of typical overhead structures will be at least partially controlled by fatigue rather than by structural design.

10.2.3 Load combinations and application to signs and supports

[AASHTO-LTS-6 3.4, AASHTO-LRFDLTS-1 3.4]

The AASHTO-LTS-6 specifications identify four group load combinations to be used in design [AASHTO-LTS-6 3.4]. The first three combinations are for structural design. Because Group Loads II and III are to be used with a 133 percent allowable stress it may be easiest to multiply those two load combinations by 0.75 during analysis so that the results of all three load combinations can be compared directly at 100 percent allowable stress.

The AASHTO-LRFDLTS-1 specifications identify seven load combination limit states [AASHTO-LRFDLTS-1 3.4]. The first five combinations are for structural design.

AASHTO-LTS-6 Group Load IV and AASHTO-LRFDLTS-1 load combination limit state Fatigue I are for fatigue design.

Live load is not included in any of the AASHTO-LTS-6 group load combinations or AASHTO-LRFDLTS-1 load combination limit states but is to be considered locally for service facilities such as runways or platforms [BDM 10.2.2.2].

10.2.4 Analysis and design

[AASHTO-LTS-6 4.4, 4.5, 10.4, 10.5; AASHTO-LRFDLTS-1 4.4, 4.5, 10.4, 10.5]

Methods of analysis that satisfy the requirements of equilibrium and compatibility and use the linear stress-strain relationship for the material may be used [AASHTO-LTS-6 4.5, AASHTO-LRFDLTS-1 4.5]. AASHTO-LTS-6 design of metal members and reinforced concrete components of sign support structures shall follow the allowable stress design (ASD) method [AASHTO-LTS-6 4.4]. AASHTO-LRFDLTS-1 design of metal members and reinforced concrete components of sign support structures shall follow the load and resistance factor design (LRFD) method [AASHTO-LRFDLTS-1 4.4].

The designer should use the following assumptions for typical truss connections:

- Welded tube-to-tube or pipe-to-pipe, chord-to-web member connections are rigid with respect to both axes.
- Welded gusset plate, chord-to-web member connections are rigid in the plane of the gusset and pinned out of plane.
- Bolted gusset plate, chord-to-web member bearing connections are pinned with respect to both axes.
- Bolted gusset plate, chord-to-web member fully tightened connections are rigid in the plane of the gusset and pinned out of plane.
- Shop welded, field bolted splice plate, chord-to-chord connections are rigid with respect to both axes.
- Shop welded, field bolted base-plate-to-anchor-bolt connections are rigid with respect to both axes.

The designer may utilize commercial finite element software such as STAAD.Pro to analyze and design sign support structures. The software normally will consider all members to be rigidly connected about both axes and thus automatically will determine secondary bending stresses in trussed portions of the structure. Where the rigid connections are not appropriate, the designer has the option of specifying releases to simulate pinned connections.

Usually the software also will consider all members fully braced at each end, and that assumption will need to be corrected for compression and bending in posts composed of more than one finite element member and possibly for other conditions in the structure. In the typical overhead bridge-type sign truss, upper U-bolt connections between post and truss chord can carry only tension, and the designer needs to model the connections carefully. The designer shall verify the finite element analysis and design computations for critical members by hand computations.

For an overhead bridge-type sign truss, the midspan deflection under AASHTO-LTS-6 Group I dead load plus ice load or AASHTO-LRFDLTS-1 Service I dead load shall not exceed 1/150 of the span length [AASHTO-LTS-6 10.4.1, AASHTO-LRFDLTS-1 10.4.1]. For hand computations the truss deflection may be determined as for beams but with an increase of 20 percent to account for the flexibility of truss web members.

$$\Delta_{Truss} = 1.2\Delta_{Beam}$$

Where:

Δ_{Truss} = approximate deflection of the truss
Δ_{Beam} = deflection of a beam with the moment of inertia of the truss chord configuration

For an overhead cantilever-type sign truss under AASHTO-LTS-6 Group I loads or AASHTO-LRFDLTS-1 Service II loads, the horizontal deflection at the top of the vertical post shall be limited to 2.5 percent of the post height and the slope at the top of the post shall be limited to 0.35 in./ft [AASHTO-LTS-6 10.4.2.1, AASHTO-LRFDLTS-1 10.4.2.1].

Camber of overhead bridge-type sign trusses and overhead cantilever-type sign trusses shall be determined from the following equation [AASHTO-LTS-6 10.5, AASHTO-LRFDLTS-1 10.5]:

$$Camber = \Delta_{DL} + \frac{L}{1000}$$

Where:

Δ_{DL} = dead load deflection at midspan for bridge-type trusses and dead load deflection at end of span for cantilever-type trusses
L = span length

10.2.4.1 New structures

10.2.4.1.1 Steel

[AASHTO-LTS-6 Section 5, 5.4, 5.9, 5.10, 5.11, 5.12, 5.14.1, 10.4.3.1; AASHTO-LRFDLTS-1 Section 5, 5.4, 5.9, 5.10, 5.11, 5.12, 10.4.3.1]

The designer shall use the steel design provisions in the AASHTO sign specifications [AASHTO-LTS-6 Section 5, AASHTO-LRFDLTS-1 Section 5] wherever applicable. For unusual conditions where the design specifications do not apply, the designer shall follow other specifications referenced by the sign specifications. If no specifications are referenced, the AISC *Steel Construction Manual* or AISC *Hollow Structural Sections Connection Manual* [BDM 10.2.1.5] often will have more appropriate information than the AASHTO *Standard Specifications for Highway Bridges* or the AASHTO *LRFD Bridge Design Specifications*.

Unless otherwise noted on the plans, steel shall meet the following material requirements.

- Angles, bars and plates: ASTM A36, ASTM A572 Grade 50, ASTM A709 Grade 36, or ASTM A709 Grade 50
- W-sections: ASTM A992, ASTM A36, ASTM A572 Grade 50, ASTM A709 Grade 36, ASTM A709 Grade 50, or ASTM A709 Grade 50S
- Steel bar grating: ASTM A1011 Type 2
- Pipe: ASTM A53 Grade B, Type E or S; or API 5L Grade B
- Round hollow structural sections (HSS): ASTM A500 Grade B, ASTM A500 Grade C, ASTM A1085, API 5L Grade X42, or API 5L Grade X52
- Galvanized high strength bolts: ASTM F3125 Grade A325 Type 1, Class 2A. ASTM A449 Type 1 bolts or ASTM F3125 Grade A325-T Type 1 bolts may be substituted for ASTM F3125 Grade A325 Type 1 bolts where necessary to assure proper bolt length and thread length.
- Galvanized nuts: ASTM A563 Grade DH, Class 2B
- Galvanized washers: ASTM F436 Type 1
- Anchor bolts (anchor rods): ASTM F1554 Grade 55, S1*, Class 2A; or ASTM F1554 Grade 105, S4 (-20 degrees Fahrenheit),** Class 2A [IDOT SS 4187.01, C, 3, a, 2]

* S1 = supplementary requirement for chemical composition to assure weldability
** S4 = supplementary requirement for Charpy impact

Because manufacturers now can reliably produce pipe and HSS with dimensions at or near the lower limit of the tolerance range, pipe and HSS section design properties have been reduced to those listed in the AISC *Manual of Steel Construction,* 15th Edition; however, software may not be corrected for the changes. When using software for analysis and design, the designer needs to ensure that the software is using the latest pipe and HSS section properties or compensate for the differences between old and new properties.

When following AASHTO LTS-6, the minimum thickness for steel material shall be 0.1875 inches for main members and 0.125 inches for web and secondary members [AASHTO-LTS-6 5.14.1]. When following AASHTO LRFDLTS-1, the minimum thickness for steel material shall be 0.1793 inches for main members and 0.125 inches for web and secondary members [AASHTO-LRFDLTS-1 5.6.1].

All steel material with a thickness greater than 0.500 inches in main load carrying tension members shall meet current Charpy V-notch impact requirements [AASHTO-LTS-6 5.4, AASHTO-I 10.3.3, AASHTO-LRFDLTS-1 5.4, AASHTO-LRFD 6.6.2.1]. The portions of the structure required to meet impact requirements shall be designated on the plans and noted for Temperature Zone 2. The designer shall discuss any need for Charpy V-notch impact requirements with the supervising Unit Leader.

The Bureau prefers that fillet-weld size be limited to 5/16 inch, the largest weld that can be made in a single pass.

Bolts for chord splices and other truss member connections shall be ASTM F3125 Grade A325 galvanized high-strength steel bolts [IDOT SS 4153.06, B, 1] installed by the turn-of-nut method [IDOT SS 2408.03, S, 5]. Preferred bolt size is 7/8 inch.

U-bolts for attachment of aluminum signs, aluminum DMS cabinets, and other aluminum parts shall be stainless steel [IDOT SS 4187.01, C, 1]. U-bolts for connection of galvanized steel truss components, galvanized steel runways, and other galvanized steel parts may be stainless steel or galvanized steel [IDOT SS 4187.01, C, 2].

For steel truss members in tension, L/r shall not exceed 240 [AASHTO-LTS-6 5.9.2, AASHTO-LRFDLTS-1 5.9.4]. Overly slender members may vibrate individually [AASHTO-LTS-6 10.4.3.1, AASHTO-LRFDLTS-1 10.4.3.1].

Bureau policy is to use the length between working points with the following effective length factors (k-factors) for compression members:

- k = 1.0 for truss chords and web members,
- k = 1.8, minimum, for end posts in overhead bridge-type sign truss structures for the direction in which they behave as frame (rather than truss) members, and
- k = 2.1 for posts in overhead cantilever-type truss structures.

For steel truss members in compression, kL/r shall not exceed 140 [AASHTO-LTS-6 5.10.1, AASHTO-LRFDLTS-1 5.10.3].

All steel sign support components shall be galvanized after fabrication. The galvanizing is intended to include both the exterior and interior of tubular members. Because of explosive pressures generated in sealed spaces during galvanizing and restricted flow of molten zinc after hot dipping of a component, vent and drain holes are required in some cases. The designer should anticipate the need for and locations for holes and design accordingly.

Steel overhead sign trusses do not require a damping device.

10.2.4.1.2 Aluminum

[AASHTO-LTS-6 Section 6, Table 6.4-2, 6.4.3.1, 6.4.4.2, 6.5, 6.8.1, 6.9, 10.4.3, 10.4.3.1, Table B.6-4]*The contents of this article apply only to allowable stress design using AASHTO LTS-6. Because the Bureau no longer permits aluminum for new sign support structures without approval of the Chief Structural Engineer, this article is now primarily intended to be used for reference when analyzing existing aluminum structures.*

Aluminum box truss components are assembled from tubes with continuous chords connected with short web members. Except where gussets are used, the web diagonals and struts are cut to length with fish-mouth ends, which then are fillet welded to the continuous members. The diagonal and strut connections are gapped so that there is no overlap between adjacent web members. Usually the gap created at the surface of chords by aligning centerlines of all intersecting members at a point is sufficient, but occasionally it may be necessary to realign web members. If the final alignment is more than 2 inches from the centerline alignment at a point, the realignment shall be considered in the analysis.

For ease of fabrication internal diagonals usually are offset from panel points. Because internal diagonals are redundant and lightly stressed the offset need not be considered in design.

Because it is difficult to weld and inspect connections between members that intersect at small angles, the angle between any diagonal and chord shall be 35 degrees or more. Although the lower limit for end-welded tubular connections is taken as 30 degrees by some authorities, the office has set the higher limit based on the advice of aluminum sign support fabricators.

The designer shall use the aluminum design provisions in the AASHTO sign specifications [AASHTO-LTS-6 Section 6] wherever applicable. For unusual conditions where the specifications do not apply, the designer shall follow other specifications referenced by the sign specifications. If no specifications are referenced, the Aluminum Association *Aluminum Design Manual* [BDM 10.2.1.5] often will have more appropriate information than the AASHTO *Standard Specifications for Highway Bridges*.

Extruded tube, structural shapes, and plate for aluminum sign trusses shall be Alloy 6061-T6.

Minimum thickness for aluminum material shall be 0.125 inches [AASHTO-LTS-6 6.8.1].

Because welding removes beneficial effects of heat-treating and cold working, allowable stresses need to be reduced for zones within one inch of a weld as required in the AASHTO sign specifications [AASHTO-LTS-6 6.5]. Because the reductions are difficult to apply as intended by the specifications, the designer should consult tables specifically for Alloy 6061-T6 [AASHTO-LTS-6 Table B.6-4 (B.6-3)].

The designer also shall consider the locations of the welded zones in a member with respect to potential buckling or bending collapse mechanisms. The zones weakened by welding will behave as hinges under overload and lead to early collapse unless the allowable stresses are correctly evaluated with respect to member behavior.

Welding shall conform to *Structural Welding Code—Aluminum, AWS D1.2/D1.2M: 2014* [AASHTO-LTS-6 6.9 and BDM 10.2.1.5]. For the typical sign trusses, workmanship shall be Class I. The office modifies the welding code specifications as follows.

- The office prefers that fillet-weld size be limited to 5/16 inch, the largest weld that can be made in a single pass.
- Aluminum filler alloy ER5356 or ER5556 shall be used [IDOT SS 4187.01, A, 7]. Only microscopically clean welding wire (those which have been shaved after drawing) should be used, and spools of wire remaining at the end of the day's production should be sealed in polyethylene bags. Welding wire in drive rolls and gun not so protected should be discarded. With ER5356 or ER5556 electrodes allowable design stresses for welded zones do not need to be additionally reduced for member thicknesses above 0.375 inches [AASHTO-LTS-6 Table 6.4-2].
- Tubes should be milled to the required radii with the maximum gap at any point not greater than 1/16 inch. Forced fits must be avoided, and only downhand welding is allowed.
- All areas to be welded shall be brushed with stainless steel brushes immediately prior to welding. All aluminum welding shall be performed by the gas metal arc welding (GMAW) process. Only the stringer bead technique shall be used. Interpass temperature shall not exceed 200 degrees Fahrenheit. All initial root passes shall not exceed 5/16 inch and must penetrate the root. The convexity of a fillet weld shall not exceed 1/16 inch. All weld craters must be eliminated, and wherever possible welds should carry through tight areas without stopping.
- Tack-weld ends shall be filled and shall not terminate in craters. If a tack weld is cracked, the crack shall be removed before welding begins.

Stainless steel bolts [IDOT SS 4187.01, C, 1] shall be used in chord splices. Preferred size is 7/8-inch.

Stainless steel U-bolts shall be used for attachment of aluminum signs, aluminum DMS cabinets, and other aluminum parts [IDOT SS 4187.01, C, 1].

Slender aluminum truss members may vibrate individually during uniform wind conditions and eventually suffer fatigue damage. Based on satisfactory performance of Iowa DOT aluminum sign trusses in service, the Bureau prefers that the slenderness of all diagonals and struts not exceed an L/r of 150. The limit of 150 is more conservative than the recommended slenderness limit for tension members in the AASHTO sign specifications [AASHTO-LTS-6 6.4.3.1, 10.4.3.1].

Bureau policy is to use the length between working points with the following effective length factors (k-factors) for compression members:

- k = 1.0 for truss chords and web members,
- k = 1.8, minimum, for end posts in overhead bridge-type sign truss structures for the direction in which they behave as frame (rather than truss) members, and
- k = 2.1 for posts in overhead cantilever-type truss structures.

For truss members in compression, the slenderness limit, kL/r, should not exceed 120 [AASHTO-LTS-6 6.4.4.2].

To avoid damaging vibrations of an aluminum overhead truss when sign panels are not attached, a damping device shall be provided at the center of the truss [AASHTO-LTS-6 10.4.3]. The damping device shall be a 31-pound Stockbridge type (Alcoa Aluminum 1708-17.1) or approved equal.

10.2.4.2 Existing structures

When sign areas are to be changed on existing overhead bridge-type sign trusses, overhead cantilever-type sign trusses, or bridge-mounted sign support structures during signing updates, the Bureau will review the changes based on the following documents and information from the Traffic and Safety Bureau:

- A copy of the original design plans,
- The dimensions and positions for all signs that will remain on the support structures, and
- The dimensions and positions of the new signs being installed on the support structures.

There are three possible results of the review:

- Existing sign support structures are acceptable with the new signs,
- Signs need to be reduced in size, or
- Existing sign support structures need to be replaced.

10.2.4.2.1 Overhead bridge-type sign truss review

The review of an overhead bridge-type sign truss shall be based on the allowable sign area and wind load shown on the plans for the structure. If the new sign area is larger than the allowable sign area or the sign height is greater than the allowable sign height, the designer shall perform an approximate analysis.

For an approximate analysis, the designer shall assume the truss to be a simple span beam and the supports to be simple cantilevers. Place the wind loads on the allowable sign area to determine the maximum moment and shear in the truss and the maximum axial load and moment at the base of the posts. Compare these quantities to those determined using the new sign area and location. If the moments, shear, and axial load are no more than 10 percent greater than those calculated for the allowable sign area, the new sign area may be approved.

If the sign height extends above the top chords or below the bottom chords of the truss more than 5.25 feet, the horizontal spacing of aluminum 6 x 3½ x ½-inch sign support angles will need to be reduced from the 5-foot maximum. If the sign height extends above the top chords or below the bottom chords of the truss by more than 6.5 feet, the horizontal spacing of steel L6 x 3½ x ½-inch sign support angles will need to be reduced from the 5-foot maximum. The designer will need to provide the new maximum spacing to the Traffic and Safety Bureau for inclusion in their plan set. As an alternative to a reduced spacing for the sign-support angles, the designer may substitute a stronger section and U-bolt connection capable of resisting the design loads.

10.2.4.2.2 Overhead cantilever-type sign truss review

The review of an overhead cantilever-type sign truss shall be based on the sign area shown on the plans for the structure. If the new sign area is less than or equal to the sign area shown on the plans, the new sign area may be approved. If the new sign area is greater than the sign area shown on the plans, the sign area will be limited to the sizes shown in the following tables. Table 10.2.4.4-1 applies to larger aluminum-truss-with-steel-end-post structures, and Table 10.2.4.4-2 applies to smaller aluminum-truss-with-steel-end-post structures. These tables do not apply to SCST-17 standard trusses made entirely of

steel. For a SCST-17 standard truss, the new sign area may be approved if it is less than or equal to the maximum allowable sign area shown on standard sheet SCST-02-17.

Table 10.2.4.4-1. Allowable sign area for larger overhead cantilever-type aluminum-truss-with-steel-end-post structures

Maximum cantilever length(1), feet	Maximum sign height, feet	Maximum sign area, ft^2
35.00	14.00	210
34.00	14.00	224
33.00	14.00	238

Table notes:

(1) See Figure 10.2.4.4.
(2) Steel pipe end post 22- or 24-inch diameter by 0.500 inch thick
(3) Maximum end post (truss) height 27.00 feet. See Figure 10.2.4.4.
(4) Aluminum truss chords 5½ x 5/16 inches
(5) Aluminum web members 2½ x ¼ inches, 2¼ x 3/16 inches, 2 x 3/16 inches, and 2 x ¼ inches

Table 10.2.4.4-2. Allowable sign area for smaller overhead cantilever-type aluminum-truss-with-steel-end-post structures

Maximum cantilever length(1), feet	Maximum sign height, feet	Maximum sign area, ft^2
33.00	10.00	150
30.00	11.00	176
27.50	12.00	192

Table notes:

(1) See Figure 10.2.4.4.
(2) Steel pipe end post 18-inch diameter by 0.500 inch thick
(3) Maximum end post (truss) height 27.00 feet. See Figure 10.2.4.4.
(4) Aluminum truss chords 5½ x 5/16 inches
(5) Aluminum web members 2½ x 3/16 inches, 1¾ x 3/16 inches, and 2 x 3/16 inches

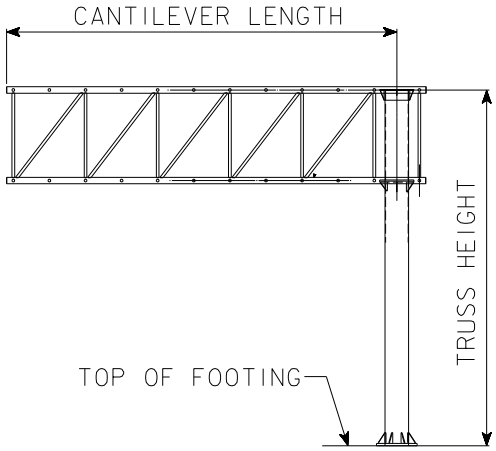

Figure 10.2.4.4. Overhead cantilever-type truss dimensions

10.2.4.2.3 Bridge-mounted sign support structure review

The designer should base review of bridge-mounted sign support structures on the limits in the original plans, carefully considering design wind pressure information obtained through National Cooperative

Highway Research Program (NCHRP) Project 15-67: Wind Drag Coefficients for Highway Signs and Support Structures. NCHRP Project 15-67 indicates that the actual average drag coefficient for a bridge-mounted sign can be much higher than what is currently specified in AASHTO LTS-6 and AASHTO LRFDLTS-1. NCHRP 15-67 also indicates that the pressure distribution on a bridge-mounted sign is nonuniform, especially when the sign extends significantly above the top of the bridge barrier rail.

10.2.5 Detailing

[AASHTO-LTS-6 6.11.1, AASHTO-LRFDLTS-1 14.5.11.1]

To prevent galvanic corrosion, contact between aluminum and dissimilar metals shall be avoided [AASHTO-LTS-6 6.11.1, AASHTO-LRFDLTS-1 14.5.11.1] except as follows. For typical sign support structures the Bureau permits contact (1) between the aluminum structure and stainless steel fasteners, and (2) between the aluminum structure and galvanized steel shapes and plates.

Anchor bolts (anchor rods) shall be galvanized and comply with ASTM F1554 Grade 55, S1; or ASTM F1554 Grade 105, S4 (-20 degrees Fahrenheit) [IDOT SS 4187.01, C, 3, a, 2]. Generally bolt size should match base plate thickness. Anchor bolt nuts shall be tightened by the turn-of-nut method and the procedure shall be given on the plans. See the commentary for this article for the procedure [BDM C10.2.5].

Bureau policy does not permit the use of grout with anchor bolts but requires space between base plate and top of foundation. To restrict entry to this space, the Bureau uses a standard rodent guard (a wire mesh that wraps the base plate) detail. This detailing that excludes grout is intended to prevent corrosion.

For an overhead bridge-type truss supporting a DMS, details for the following are required:

- Electrical access,
- Walkway, and
- Ladder.

So that the contractor and construction personnel have erection standards, the designer shall include on the plans a list of tolerances for foundations and anchor bolts and for the completed structure. Typical tolerances are given in the commentary for this article [BDM C10.2.5].

10.2.6 Shop drawings

The fabricator shall submit shop drawings for review as required [IDOT SS 2423.03, A, 1].

10.2.7 Structures and components

10.2.7.1 Overhead bridge-type sign trusses

Generally the Bureau bases overhead bridge-type sign truss structures on a 5-foot length-module and provides standard plans for structures nominally 50 to 130 feet in length. Standard overhead bridge-type trusses have center-to-center chord spacings of 5 feet horizontal by 6 feet vertical. The truss web members are arranged in a Warren pattern on all four sides, and internal diagonals are placed at each set of panel points along the truss. The truss is fabricated in 20- to 40-foot sections that are bolted together in the field. The latest standard plans make use of galvanized steel pipe (minimum yield strength of 35 ksi) for the overhead space truss and galvanized steel hollow structural sections (minimum steel yield strength of 42 ksi) for the truss supports [OBS SS SOST-01-11 to SOST-08-11]. The standards allow for substitution of hollow structural sections for pipe.

Due to fabrication- or fatigue-related cracks in welds in aluminum overhead bridge-type trusses supporting DMS cabinets, the Bureau no longer places DMS cabinets on aluminum overhead bridge-type trusses. The Bureau currently does not allow the use of new aluminum sign support structures without approval of the Chief Structural Engineer.

Overhead bridge-type sign structures generally should not be placed on highway bridges but, if a sign structure must be located on a bridge, it shall be located at or very near a pier.

10.2.7.2 Overhead cantilever-type sign trusses

The Bureau usually configures overhead cantilever-type structures on a vertical, Pratt five-panel and horizontal, Warren ten-panel truss pattern. Because the truss configuration length is limited to 40 feet but does not vary much, the Pratt panel lengths typically are in the 6- to 7-foot range. Center-to-center chord spacings are 4 feet horizontal by 7 feet vertical. Internal diagonals are placed at all of the Pratt panel points. The current standard plans make use of galvanized steel hollow structural sections (minimum yield strength of 42 ksi) and galvanized steel pipe (minimum yield strength of 35 ksi) for the overhead cantilever truss and galvanized steel pipe (minimum yield strength of 42 ksi) for the end post [BSB SS SCST-01-17 to SCST-05-17]. Prior to 2017, the standard plans made use of aluminum tubes for the overhead cantilever truss and galvanized steel pipe for the end post.

DMS cabinets shall not be placed on overhead cantilever-type sign trusses without approval of the Chief Structural Engineer.

Overhead cantilever-type sign trusses shall not be placed on highway bridges.

10.2.7.3 Roadside dynamic message sign support structures

The current standard plans for roadside dynamic message sign support structures make use of a pair of galvanized steel pipe mast arms attached to a galvanized steel hollow structural section support post with a 30-foot maximum height [BSB SS RDMS-01-13 to RDMS-06-13].

10.2.7.4 Runways and ladders

Runways, ladders, other service aids, and their connections to sign structures need to be designed for dead load, live load, ice load (as applicable), and wind load as previously indicated [BDM 10.2.2]. Sign structures then need to be designed for dead, ice (as applicable), and wind loads transmitted through the connections.

In addition to structural capacity, service aids need to be designed to meet Occupational Safety and Health Administration (OSHA) rules. The designer also must consider access restrictions to prevent unauthorized use.

10.2.7.5 Bridge-mounted sign supports

The Bureau currently utilizes unofficial working standards for bridge-mounted sign supports (i.e., supports for signs that supply traffic information to motorists traveling on the roadway that passes under the bridge) to assist in the development of site-specific designs. The sign supports consist of galvanized steel brackets with a maximum horizontal spacing of 8 ft. Each bracket is comprised of a vertical W6x15 member to which the sign panel is attached, an upper horizontal W6x15 member that mounts to the bridge concrete barrier rail, and a lower horizontal W6x15 member that mounts to the bridge exterior beam/girder. The maximum allowable sign height for the supports is 11’-10. The maximum allowable sign length is 14 ft for a 2-bracket support and 22 ft for a 3-bracket support. The maximum allowable skew angle between the sign panel and bridge barrier rail is 20 degrees.

10.2.7.6 Foundations

[AASHTO-LTS-6 13.1; AASHTO-LRFDLTS-1 13.1; AASHTO-I 4.4.7.1.1.1, 4.11.4.1.5; AASHTO-LRFD 10.6.3.3]

Generally the Bureau prefers spread footing foundations for support of overhead and roadside structures. The Bureau standard sign support structure plans show foundations for overhead bridge-type sign trusses consisting of a stem wall on a spread footing and foundations for overhead cantilever-type trusses consisting of a pedestal on a spread footing. For designs using AASHTO LTS-6, spread footings for sign

support structures shall be designed according to the 2002 AASHTO *Standard Specifications for Highway Bridges*, 17th Edition as required in the sign specifications [AASHTO-LTS-6 13.1], using either allowable stress design (ASD) or load factor design (LFD). For designs using AASHTO LRFDLTS-1, spread footings for sign support structures shall be designed according to the 2017 AASHTO LRFD Bridge Design Specifications, 8th Edition using load and resistance factor design (LRFD).

The bottom of a spread footing shall be placed at least 4 feet below ground line. Unless site soil information indicates otherwise, the designer may assume the net allowable soil bearing pressure (for settlement) to be 2.0 ksf. In order to prevent overturning of footings on soil, under ASD the eccentricity of loading shall not exceed one-sixth of the footing dimension [AASHTO-I 4.4.7.1.1.1]. Under LFD the eccentricity of factored loading shall not exceed one-fourth of the footing dimension [AASHTO-I 4.11.4.1.5]. Under LRFD the eccentricity of factored loading shall not exceed one-third of the footing dimension [AASHTO-LRFD 10.6.3.3]. When checking the bearing pressure and the eccentricity, the designer should include the soil overburden.

For poor soil conditions, locations above utility lines, and other special site conditions the Bureau prefers steel H-pile foundations. Design of the piles will require information from soil borings. If soil borings are not provided, the designer should request borings from the Design Bureau Soils Design Unit. With ASD the designer should use the friction and end bearing information in the *Foundation Soils Information Chart, Pile Foundation* [BDM 10.2.1.5]. With LFD and LRFD the designer should use the information in the LRFD Bridge Design Manual [BDM 6.2.7].

Drilled shaft foundations may be used with permission of the supervising Unit Leader or Chief Structural Engineer. Overhead bridge-type sign support structures typically are designed under the assumption that the foundation between the two posts of a truss support is continuous and the base plates are not subject to relative movement, as would be the case for independent drilled shafts.

C10.2 Sign Support Structures

C10.2.5 Detailing

Procedure for tightening anchor-bolt (anchor-rod) nuts for SOST-11 overhead bridge-type trusses and RDMS-13 roadside dynamic message sign supports

1) This work shall be performed only on days with winds less than 15 mph. All tightening of the nuts is to be done in the presence of the inspector. Once the tightening procedure is started it must be completed on all of the base plate nuts without pause or delay.
2) Properly sized wrenches designed for tightening nuts and/or bolts shall be used to avoid rounding or other damage to the nuts. Adjustable end wrenches or pipe wrenches shall not be used.
3) Base plate, anchor bolts, and nuts are to be free of any dirt or debris.
4) Apply stick wax or bees wax to the threads and bearing surfaces of the anchor bolts, nuts, and washers.
5) Tighten top nuts so they fully contact the base plate. Tighten leveling nuts to snug tight condition. Snug tight is defined as the full effort of one person on a wrench with a length equal to 21 inches. Apply force as close to the end of the wrench as possible. Pull firmly by leaning back and using entire body weight on the end of the wrench until the nut stops rotating. Use a minimum of two separate passes of tightening. Sequence the tightening in each pass so that the nut on the opposite side, to the extent possible, will be subsequently tightened until all of the nuts in that pass have been tightened.
6) Tighten top nuts to snug tight as described for the leveling nuts.
7) Match-mark the top nuts and base plate using paint, crayon, or other approved means to provide a reference for determining the relative rotation of the nut and base plate during tightening. Using a striking or hydraulic wrench, further tighten the top nuts in two passes as listed in the following table. Sequence the tightening in each pass so that the nut on the opposite side, to the extent possible, will be subsequently tightened until all nuts in that pass have been turned. Do not rotate the leveling nut during the top nut tightening.

Anchor-bolt size	First pass	Second pass	Total rotation
1½-inch diameter	1/6 turn	1/6 turn	1/3 turn

8) Lubricate, place, and tighten the jam nuts to snug tight.

Procedure for tightening anchor-bolt (anchor-rod) nuts for SCST-17 overhead cantilever-type trusses

Use the same notes as above with the following modifications:

- In Step 5, snug tight is defined as the full effort of one person on a wrench with a length equal to 42 inches
- In Step 7, replace the table for 1½-inch diameter anchor bolts with the table below for 3-inch diameter anchor bolts.

Anchor-bolt size	First pass	Second pass	Total rotation
3-inch diameter	1/12 turn	1/12 turn	1/6 turn

Erection tolerances for SOST-11 overhead bridge-type trusses

Foundations and anchor bolts

1) Each foundation shall be accurately located, with the center of the two anchor bolt groups not more than 1 inch from the plan location in the direction parallel with the truss and not more than 1 inch from the plan location in the direction perpendicular to the truss.

2) The two foundations shall be parallel. The distance (along the overhead truss) between the centers of front anchor bolt groups and the distance (along the overhead truss) between centers of rear anchor bolt groups shall not differ by more than 1 inch.
3) Elevations of the top of each foundation shall be within 1 inch of plan elevation.
4) Anchor bolt groups shall be located accurately with centers of adjacent anchor bolt groups within 3/16 inch of the plan distance apart.
5) Anchor bolts shall be plumb within 1/4 inch per foot from vertical.
6) Anchor bolts shall project above top of foundation within 1/4 inch of the plan dimension.
7) Welding of anchor bolts shall not be allowed. The contractor shall obtain a template from the manufacturer/fabricator for proper placement of the anchor bolts.

Completed structure

1) Each truss support post shall be plumb within 1/16 inch per foot of vertical in two perpendicular directions.
2) Stick-out of each truss lower chord shall be within 3 and 5½ inches measured from outer U-bolt to inside of chord stop ring.
3) The overhead truss shall be square within support posts. The horizontal lines between chords shall be level within 1/16 inch per foot of horizontal, and the vertical lines between chords shall be plumb within 1/16 inch per foot of vertical.

Erection tolerances for SCST-17 overhead cantilever-type trusses and and RDMS-13 roadside dynamic message sign supports

Foundations and anchor bolts

1) The foundation shall be accurately located, with the center of the anchor bolt group not more than 1 inch from the plan location in the direction parallel with the truss (mast arms for RDMS-13) and not more than 1 inch from the plan location in the direction perpendicular to the truss (mast arms for RDMS-13).
2) The elevation of the top of the foundation shall be within 1 inch of plan elevation.
3) Anchor bolts shall be plumb within 1/4 inch per foot from vertical.
4) Anchor bolts shall project above top of foundation within 1/4 inch of the plan dimension.
5) Welding of anchor bolts shall not be allowed. The contractor shall obtain a template from the manufacturer/fabricator for proper placement of the anchor bolts.

Completed structure

1) The post shall be plumb within 1/16 inch per foot of vertical in two perpendicular directions.
2) For the SCST-17 truss, the horizontal lines between chords shall be level within 1/16 inch per foot of horizontal, and the vertical lines between chords shall be plumb within 1/16 inch per foot of vertical.

TABLE OF CONTENTS ~ FALSEWORK DESIGN

Note that section 11.2 is based primarily on AASHTO's *Guide Design Specifications for Bridge Temporary Works, First Edition with 2008 Interim Revisions* [AASHTO-Temp] and allowable stress design (ASD).

11 Falsework design
- 11.1 General
- 11.2 Falsework and forms
  - 11.2.1 General
    - 11.2.1.1 Policy Overview
    - 11.2.1.2 Design information
    - 11.2.1.3 Definitions
    - 11.2.1.4 Abbreviations and notation
    - 11.2.1.5 References
  - 11.2.2 Load application
  - 11.2.3 Service load groups
  - 11.2.4 Analysis and design
    - 11.2.4.1 Analysis
    - 11.2.4.2 Allowable stresses
      - 11.2.4.2.1 Plywood sheathing
      - 11.2.4.2.2 Board sheathing
      - 11.2.4.2.3 Dimension lumber and timber
      - 11.2.4.2.4 Steel
      - 11.2.4.2.5 Piles
      - 11.2.4.2.6 Soils
    - 11.2.4.3 Section properties
    - 11.2.4.4 Design
  - 11.2.5 Detailing
  - 11.2.6 Plan review
    - 11.2.6.1 Plan checklist
    - 11.2.6.2 Design review checklist
    - 11.2.6.3 Reviewed copy distribution

11 Falsework design

11.1 General

Reserved

11.2 Falsework and forms

11.2.1 General

This series of articles replaces all previous Bridges and Structures Bureau documents related to falsework, including those titled *Criteria for Falsework Check*. The approach adopted here is new to the Bureau, to use the AASHTO *Guide Design Specification for Bridge Temporary Works* as the primary reference, with additional information from publications of the American Forest & Paper Association (AF&PA), APA – The Engineered Wood Association (APA), and American Concrete Institute (ACI) [BDM 11.2.1.5].

The designer should review the appropriate Bridge Design Manual section for the bridge type for which the falsework will be designed, as the section may indirectly affect falsework and forms. The following are the articles for the typical bridge types: continuous concrete slab (CCS) [BDM 5.6.1], pretensioned prestressed concrete beam (PPCB) [BDM 5.4.1], and continuous welded plate girder (CWPG) [BDM 5.5.1]. For CCS bridges the contractor is required to submit falsework plans for review [IDOT SS 2403.03,

L, 7, a], but for the other two types, as well as for rolled steel beam bridges (RSB), falsework plans need not be submitted for review unless specifically required by the contract documents.

11.2.1.1 Policy Overview

Terminology within the construction industry regarding the molding and temporary support of concrete structures during cast-in-place construction is not universal. In the building industry and in American Concrete Institute (ACI) publications "formwork" generally is used to describe the entire mold and temporary support construction.

However, at the Iowa DOT the term "formwork" has a more limited meaning. The word "form" or "formwork" is taken to mean the mold and immediate bracing of the mold, and "falsework" is taken to mean the temporary support structure for the mold. AASHTO's *Guide Design Specification for Bridge Temporary Works* makes the same distinction, and there are separate sections within the guide for falsework and formwork [AASHTO-Temp 2 and 3, respectively]. This series of articles will follow the Iowa DOT and AASHTO "form", "formwork", and "falsework" terminology.

The typical bridge types designed by the Bureau, continuous concrete slab (CCS), pretensioned prestressed concrete beam (PPCB), continuous welded plate girder (CWPG), and rolled steel beam (RSB) usually make use of cast-in-place concrete construction and therefore will require falsework for support of forms. The design of falsework is entirely the responsibility of the contractor, and current Iowa DOT Standard Specifications require that a Professional Engineer licensed in the State of Iowa perform the design [IDOT SS 2403.03, L, 1, a].

The present Iowa DOT Standard Specifications also require the contractor to submit for review the falsework and centering plans for concrete slab and cast-in-place concrete girder bridges [IDOT SS 2403.03, L, 7, a]. Both bridge types mentioned in the specifications require extensive falsework supported on temporary foundations. Because the Bureau generally no longer designs cast-in-place concrete girder bridges, typically only falsework plans for CCS bridges are reviewed by the Bureau.

The designer and reviewer should recognize that less precision is required for formwork and falsework computations than for bridge design. Acceptable basic simplifications and beam formulas for typical span conditions are given in ACI's *Formwork for Concrete* [BDM 11.2.1.5]. Often it will be sufficient to consider only the worst-case scenario.

In the design of falsework, the contractor may propose used or locally available structural materials not permissible for permanent structures. The structural implications are especially important for lumber and timber. The designer and reviewer should recognize that allowable stresses for a given grade of lumber or timber vary widely for different species and, because of grading rules, cut-to-length timber beams and stringers do not have the same grading as the original members. Therefore, typical design values, such as those given in the Iowa DOT Standard Specifications [IDOT SS 2403.03, L, 5, c], may be too generous for lumber and timber of some grades, species, or condition. The designer or reviewer will need to obtain as much information as possible about the material to be used so that the falsework is both safe and economical. AASHTO's *Guide Design Specification for Bridge Temporary Works* provides for several levels of allowable stresses depending on how much is known about the lumber and timber proposed by the contractor.

Falsework can be very unstable and subject to collapse if not adequately braced. In general, falsework must be braced in three planes--horizontal and two perpendicular vertical planes--as well as be braced for overall torsion. Usually nailed-in-place plywood form sheathing is sufficient to provide the horizontal bracing but bracing for the vertical planes must be added to the structure. In any case the designer and reviewer need to ensure that sufficient bracing is shown on the plans so that the falsework will not fail during placing of concrete. Because failures can be of a progressive type, there should be no locally unbraced parts of the falsework construction that could set off a chain reaction collapse.

Water used for curing also is an important consideration. Temporary foundations such as mudsills may

need protection to avoid softening or wash-out of the supporting soil.

11.2.1.2 Design information

For falsework design the bridge project plans are the source for the configuration, dimensions, and elevations of the bridge to be constructed. For concrete slab bridges falsework may rely on temporary foundations for support, and thus the soils information provided on the project plans also is important to the falsework designer.

For falsework review the falsework plans and computations submitted with the plans are the primary sources of information, but the reviewer also should refer to the bridge project plans as needed to ensure that the falsework will provide the correct configuration and dimensions of the bridge.

11.2.1.3 Definitions

Blue Book is the Iowa DOT publication: *Foundation Soils Information Chart, Pile Foundation*. If the publication no longer is available from the Soils Design Unit, see the work-around in the commentary [BDM C11.2.4.2.5].

Centering is specialized temporary support that is lowered or removed as a unit to avoid introducing injurious stresses in any part of the structure.

Falsework is the temporary construction used to support the permanent structure until it becomes self-supporting [AASHTO-Temp 1.3]. Structural supports on the soffit of a bridge deck and slab overhangs are considered falsework [AASHTO-Temp 3.1.3].

Form is the mold used to retain the fluid or plastic concrete in its designated shape until it hardens. In Bureau practice, form is part of the formwork as defined below.

Formwork is the temporary structure or mold used to retain the fluid or plastic concrete in its designated shape until it hardens [AASHTO-Temp 1.3]. Formwork includes vertical side forms, wall forms, and column forms and their associated studs, walers, etc. [AASHTO-Temp 3.1.3].

Walers or wales, are horizontal cross members used as support for the studs in vertical formwork. AASHTO favors the term "waler", and ACI favors the term "wale".

11.2.1.4 Abbreviations and notation

ACI, American Concrete Institute
AF&PA, American Forest and Paper Association, which is the successor to the National Forest Products Association (NFPA)
AISC, American Institute of Steel Construction, Inc.
APA, APA - The Engineered Wood Association, the successor to the American Plywood Association, which was the successor to the Douglas Fir Plywood Association (DFPA)
ASD, allowable stress design, terminology used in NDS [BDM 11.2.1.5] and by ACI, same as WSD
AWC, American Wood Council, the wood products division of AF&PA
ASCE, American Society of Civil Engineers
CCS, continuous concrete slab
C_s, concrete setting factor included in APA's *Concrete Forming, Form No. V345U*
CWPG, continuous welded plate girder
LDF, load duration factor, also designated C_D in the NDS
NDS, AF&PA's *National Design Specification for Wood Construction* [BDM 11.2.1.5]
NFPA, National Forest Products Association, superseded by American Forest and Paper Association (AF&PA)
PPCB, pretensioned prestressed concrete beam
RCE, Resident Construction Engineer

RSB, rolled steel beam
WEAP, wave equation analysis of pile driving
WSD, working stress design, terminology used by AASHTO and ACI, same as ASD
WUF, wet use factor, also designated C_M in the NDS

11.2.1.5 References

American Association of State Highway and Transportation Officials (AASHTO). *Guide Design Specification for Bridge Temporary Works with 2008 Interim Revisions.* Washington: AASHTO, 1995 and 2008. Note that this guide is based on the Seventh Edition of *Formwork for Concrete* and the 2005 Edition of *National Design Specification for Wood Construction, Commentary, Supplement, and Examples.*

American Concrete Institute (ACI). *Formwork for Concrete, SP-4, Seventh Edition.* Farmington Hills: ACI, 2005. Note that this guide is based on the 2005 Edition of *National Design Specification for Wood Construction* and *Supplement.*

American Forest and Paper Association (AF&PA). *National Design Specification for Wood Construction, Commentary, Supplement, and Examples, 2005 Editions.* Washington: AF&PA, 2005. Note that the National Forest Products Association published editions of the NDS prior to 1993.

American Society of Civil Engineers (ASCE). *Minimum Design Loads for Buildings and Other Structures, ASCE 7-98.* Reston, ASCE, 2000. Note that this publication is the successor to ANSI A58.1.

APA - The Engineered Wood Association. *Concrete Forming, Form No. V345U.* Tacoma: APA - The Engineered Wood Association, 2003. Note that the American Plywood Association published prior editions. (Available on the Internet at: http://www.apawood.org)

APA - The Engineered Wood Association. *Panel Design Specification, Form No. D510C.* Tacoma: APA - The Engineered Wood Association, 2008. Note that prior editions were titled *Plywood Design Specification*. (Available on the Internet at: http://www.apawood.org)

Brockenbrough, R.L. *AISC Rehabilitation and Retrofit Guide, Steel Design Guide Series 15.* Chicago: American Institute of Steel Construction (AISC), 2002. Note that this guide replaces *Iron and Steel Beams: 1873-1952,* which was published by AISC in 1953.

Dirks, Kermit and Patrick Kam. *Foundation Soils Information Chart, Pile Foundation.* Ames: Iowa Department of Transportation, Office of Road Design, January 1989/September 1994. (This publication commonly is called the “Blue Book”. Contact the Soils Design Unit of the Design Bureau for a copy. If the publication no longer is available, see the work-around for allowable stress design in the commentary [BDM C11.2.4.2.5].)

Construction and Materials Bureau. *Construction Manual.* Ames: Construction and Materials Bureau, Iowa Department of Transportation, 2001. Available on the Internet at: http://www.iowadot.gov/erl/current/CM/Navigation/nav.htm

Sunday, Wayne and Kyle Frame. *New Bridge Construction Handbook.* Ames: Construction and Materials Bureau, Iowa Department of Transportation, 2000. Available on the Internet at: https://iowadot.gov/construction_materials/structures_foundations/bridge_construction_handbook.pdf

11.2.2 Load application

Iowa DOT Standard Specifications require that the formwork and falsework designer apply the following loads [IDOT SS 2403.03, L, 4].

- Vertical load of concrete with a density of 150 pounds per cubic foot.

- Horizontal load of fresh concrete as a liquid with a density of 150 pounds per cubic foot for the depth of plastic concrete, except when lesser pressures are permitted by the *AASHTO Guide Design Specifications for Bridge Temporary Works* [AASHTO-Temp 3.2.2 and C2.2.2].
- Vertical dead load of forms and falsework.
- Vertical dead load of rail and walkway applied at edge of deck form equal to 75 pounds per linear foot.
- Construction live load equal to 50 pounds per square foot of horizontal projection.
- Live load equal to 6 kips of finishing machine located along the edge of the deck form to maximize the design condition.
- Wind load equal to 50 pounds per square foot for elevations to 30 feet above ground, increased for elevations above 30 feet.
- Other applicable loads such as horizontal due to equipment or construction sequence, additional live, impact, stream flow, and snow loads specified in the AASHTO guide [AASHTO-Temp 2.2.1, 2.2.3.2, 2.2.5.2, 2.2.5.3].

Loads for formwork are the weight of the forms; weight of concrete, including rate of pour; and construction live load. The loads for falsework are more extensive, including the edge of deck load and finishing machine load as given for bridge deck falsework for PPCB and CWPG bridges [BDM 5.4.1.2.5 and 5.5.2.2.6]. Falsework wind load is larger than required by the AASHTO guide but is the same as the construction wind load for PPCB and CWPG bridges.

11.2.3 Service load groups

In general falsework and formwork should be designed for the applicable loads in the four load combinations given in the *AASHTO Guide Design Specifications for Bridge Temporary Works* [AASHTO-Temp Table 2.3]. However, because falsework and formwork materials are treated differently under allowable stress design the designer will need to be careful when identifying critical load combinations. For steel and concrete the percentages of allowable stress in the AASHTO guide [AASHTO-Temp Table 2.3] are appropriate, but those percentages shall not be used with plywood, lumber, or timber. For plywood, lumber, or timber the load duration factor substitutes for the percentage of allowable stress and, because the load duration factors vary with type of load, it will be necessary to find the critical load combination within each applicable load group.

Allowable stresses for wood structural materials are adjusted for load duration, wet use, and other factors not given in the AASHTO table [AASHTO-Temp Table 2.3] but are adjusted as indicated in Table 11.2.3. In addition to the table notes there is discussion of the factors in the commentary for this article [BDM C11.2.3].

Table 11.2.3. Selected adjustment factors for allowable stresses for wood falsework and formwork materials

Structural component	Load combination	Load duration factor (4), (5)	Wet use factor (3), (4)
Plywood forms	Dead + live (but not wind or impact)	--- (1), (2)	---
Lumber and timber formwork and falsework	Dead + live with or without horizontal (but not wind or impact)	1.25 (2)	No
	Combinations with wind (but not impact)	1.60	No
	Combinations with impact	2.00	No

Table notes:

(1) In the past the load duration factor for plywood has been combined with an experience factor of 1.30. The current APA *Concrete Forming* publication combines the two factors into a concrete setting factor (C_s) of 1.625, which is included in the APA publication's tables.

(2) The 1.25 load duration factor assumes a 7-day load, which is appropriate for most falsework and formwork projects unless load is maintained for an extended period, in which case the load duration factor will be less. In cases (unusual for bridge construction) where formwork is reused many times ACI's *Formwork for Concrete* recommends a more conservative load duration factor of 1.00.
(3) Typically, plywood forms are considered a wet use condition and the wet use factor is included in form tables such as those in the APA *Concrete Forming* publication, but lumber and timber are considered a dry use condition because the lumber or timber members do not contact concrete. In unusual cases where lumber is used as a form or where formwork and falsework will be exposed to curing water or water from other sources the designer should apply the wet use factor.
(4) Although these two factors are the typical factors significant for ordinary formwork and falsework design, the designer should review other factors in the *National Design Specification for Wood Construction* to ensure that all appropriate factors are applied to allowable stresses.
(5) The load duration factor does not apply to compression perpendicular to the grain or to modulus of elasticity.

11.2.4 Analysis and design

During analysis and design of falsework and formwork the designer should consider its temporary nature during construction of a cast-in-place concrete bridge. Because of its temporary nature, computations do not need to be as precise or complex as those for a permanent structure.

For safe and economical falsework, the designer needs to consider several issues that often are not important in bridge design. Because falsework materials may be salvaged or of unknown quality there is need for some conservatism in design values. Deflection and settlement are important because they will result in permanent shape defects in the completed bridge. Many of the components of falsework are continuous over several supports and thus are sensitive to uplift when one span is loaded during placement of concrete. The compression edges of joists, stringers, and caps are not continuously braced and often require additional bracing. Unbalanced loads on hangers can cause torsion in supporting members. Inadequate bracing of support bents can lead to overall collapse of the falsework.

11.2.4.1 Analysis

The Bureau prefers that typical falsework and formwork structures be analyzed under the basic simplifications stated in ACI's *Formwork for Concrete.* The designer also is encouraged to use the ACI beam formulas, unless conditions within the falsework or formwork are significantly different from the formula assumptions.

For most falsework conditions, sheathing and joists should be considered continuous over three spans. If the stringer spacing is greater than 5 feet, however, joists should be designed on the basis of the number of spans possible for a joist no longer than 16 feet.

11.2.4.2 Allowable stresses

The falsework designer should recognize the need to specify materials on the plans with as much precision as is reasonable. If the materials cannot be defined accurately their allowable stresses need to be downrated for safety. The AASHTO guide provides several appropriate levels of allowable stresses for steel, lumber, and timber materials depending on how well they can be identified [AASHTO-Temp 2.1].

11.2.4.2.1 Plywood sheathing

The Iowa DOT specifications permit a variety of form surface materials [IDOT SS 2403.03, B, 5, c] but, due to cost and construction factors, contractors usually select plywood for cast-in-place concrete bridge construction. Within the many types of exterior plywood that are suitable for forms, contractors almost always select a product specifically manufactured for concrete forming because of the superior

performance under multiple uses and the mill edge sealing and form release treatment.

Of the available plywood form products, the standard products are those trademarked by APA - The Engineered Wood Association. The trademarked product "Plyform" has three grades: Class I, Class II, and Structural I. Although the weakest grade, Class II, may have limited availability, it has been submitted for review on some Iowa falsework projects. Considering the variety of plywood products that may be available, including those not trademarked by APA, the designer should consult with the contractor and not simply assume a grade.

The preferred Bureau policy is for the designer to specify the plywood form product, and properties if the product is not standard. Although the Iowa DOT specifications permit the reviewer to assume “Plyform, Class I” [DOT SS 2403.03, L, 5, c], the reviewer should recognize that assumption may be unconservative if the plywood is not specified.

Although plywood may be designed on the basis of allowable stress computations for bending, shear, and deflection, the Bureau prefers that the designer use tables in ACI's *Formwork for Concrete, SP-4, Seventh Edition* for plywood sheathing equivalent to Plyform Class I or better. The tables that meet Iowa DOT specifications are based on 7-day duration of load, wet use, an experience factor of 1.30, and three or more spans. The specific allowable values on which the tables are based are the following.

- F_b' = 1930 psi
- Rolling shear = 72 psi
- E'= 1,500,000 psi

If the direction of face grain is not specified on the plans, the designer shall consider the span to be the worse of the two conditions, face grain perpendicular to span.

In cases where the plywood sheathing is of lesser quality than Plyform Class I the designer shall perform the bending, shear, and deflection computations necessary to demonstrate that the plywood sheathing is adequate for the support spacing.

The Iowa DOT specifications require a deflection limit of 1/360 of the span [IDOT SS 2403.03, L, 6, b].

11.2.4.2.2 Board sheathing

In the past before plywood was readily available, concrete forms were sheathed with nominal 1-inch thick boards. Because the Iowa DOT specifications now require that board forms for exposed surfaces be lined with sheet material [IDOT SS 2403.03, B, 5, c] and because placing boards requires more labor than placing plywood, contractors do not use board sheathing for large areas. However, contractors may use boards for small areas that typically do not require structural design.

In an unusual case when board sheathing is to be used structurally there are two concerns for the designer. First, board lumber is not stress graded, and there are no published design values. Second, boards placed perpendicular to joists do not have the horizontal rigidity and overall bracing value of sheet materials such as plywood.

In any case where board lumber is to be used structurally in falsework, the designer shall investigate the actual lumber to be used and assign allowable stresses based on species, grade, defects, load duration, and wet use. The species, grade, and adjusted design values shall be indicated on the falsework plans.

11.2.4.2.3 Dimension lumber and timber

The wood industry classifies sawn lumber nominally 2 to 4 inches thick as dimension lumber and sawn lumber nominally 5 inches and thicker as timber. Within the dimension lumber size category there presently are three grading systems for species except southern pine and a separate system for southern pine. Within the timber size category there are two grading systems. In addition to the multiple size and grading classifications there are species groups and design value adjustment factors. It is very difficult to determine appropriate allowable stresses for dimension lumber and timber when the materials are not grade-stamped or when the stamps no longer are legible.

For typical lumber and timber in good condition the Iowa DOT Standard Specifications permit the designer and reviewer to use the design values in Table 11.2.4.2.3-1 [IDOT SS 2403.03, L, 5, c, 3) and 4)]. The designer may use larger design values from AASHTO's *Guide Design Specification for Bridge Temporary Works* or the *National Design Specification for Wood Construction Supplement* for lumber or timber fully identified on plans with size or use category, species group, and minimum grade.

Table 11.2.4.2.3-1. Design values for lumber and timber in good condition

Stress	**Design value for lumber nominally 2 to 4 inches thick, psi** (1) (3)	**Design value for timber nominally 5 inches or more thick, psi** (2) (3)
Bending, F_b	875	850
Tension, F_t	450	450
Shear, F_v	135	125
Compression perpendicular to grain, $F_{c\perp}$	425	425
Compression parallel with grain, F_c	1150	625
Modulus of Elasticity, E	1,400,000	1,300,000

Table notes:

(1) These design values were selected as the lowest for new, No. 2 lumber of douglas fir-larch, southern pine, or spruce-pine-fir. They are to be modified by the load duration factor and other applicable factors [BDM 11.2.3].

(2) These design values were selected as the lowest for new, No. 1 timber of douglas fir-larch, southern pine, or spruce-pine-fir. They are to be modified by the load duration factor and other applicable factors [BDM 11.2.3].

(3) These design values also are given in the Standard Specifications [IDOT SS 2403.03, L, 5, c].

For used lumber (and timber) the AASHTO guide provides four levels of allowable stress [AASHTO-Temp 2.1.3.3] as interpreted and summarized in Table 11.2.4.2.3-2.

Table 11.2.4.2.3-2. Allowable stresses for used lumber and timber

Condition	**Species**	**Grade**	**Maximum adjusted allowable stress**
Good	Known	Known	New lumber of known species and grade with all appropriate stress-adjustment factors (See NDS and Supplement.)
Good	Known	Unknown	New lumber of known species and No. 1 grade with all appropriate adjustment factors (See NDS and Supplement.)
Low quality or abused	Known	Known or unknown	Known species and values in AASHTO guide Appendix A without increase for load duration or other stress-adjustment factors (1)
Good, low quality, or abused	Unknown	Unknown	Mixed maple species and values in AASHTO guide Appendix A without increase for load duration or other stress-adjustment factors

Table note:

(1) The species listed in Appendix A do not include spruce-pine-fir, a common Canadian species group sold in the U.S. For low quality or abused spruce-pine-fir the designer shall assume mixed maple.

The repetitive member factor in the *National Design Specification for Wood Construction,* which permits an increase in allowable bending stress for joists and studs, shall be used only for rigidly constructed prefabricated form panels.

The Iowa DOT specifications require that deflection of joists be limited to 1/360 of the span [IDOT SS 2403.03, L, 6, b], and the Bureau prefers that the same limit be applied for lumber or timber stringers.

11.2.4.2.4Steel

The minimum yield stress for steel shapes and plate has remained relatively constant during recent years and thus the material properties for salvaged steel can be assumed with a reasonable degree of certainty. The designer may determine allowable stresses for both new and salvaged steel based on the Iowa DOT Standard Specifications, 36,000 psi yield and 22,000 psi maximum working stress, [IDOT SS 2403.03, L, 5, c, 1)] or based on information in the AASHTO guide [AASHTO-Temp 2.1.2] if the contractor certifies a higher grade of steel.

The designer should note that the allowable stress for steel stringers often will be limited by the allowable stress for an unsupported compression flange.

Although the structural properties of steel are relatively certain, weldability is less certain, especially with older steels. The designer should not depend on welds for primary connections for older steel plate and shapes, unless the weldability has been proven.

Although the Iowa DOT specifications do not set a limit for deflection of steel stringers, the Bureau prefers a limit of 1/360 of the span length.

11.2.4.2.5Piles

The Iowa DOT specifications do not require that falsework piles meet specifications for permanent piles but do require that pile bearing be determined as for permanent piles [IDOT SS 2403.03, L, 3, b and 2501.03] and that the bearing values be at least equal to the applied loads. Although the specifications have no restrictions on pile type, most contractors select timber piles for economy. Timber piles for falsework need not be treated.

Pile lengths may be estimated for friction bearing and end bearing as for permanent piles, using the Soil Design Unit's *Foundation Soils Information Chart, Pile Foundation* (Blue Book). If the Blue Book is not available, see the work-around and examples in the commentary for this article [BDM C11.2.4.2.5] because the present design for permanent piles in the BDM is based on LRFD. Maximum allowable bearing value for timber piles should be limited to 20 tons.

Sway bracing may be omitted for pile bents 10 feet or less in height [IDOT SS 2403.03, L, 3, c], but the designer will need to check lateral stability and show on the plans the minimum pile embedment required for lateral stability.

11.2.4.2.6Soils

Allowable bearing on coarse sand, gravel, very firm clay, and other similar confined soils may be taken as 1500 psf unless otherwise recommended by a Professional Engineer licensed in the State of Iowa [IDOT SS 2403.03, L, 5, c, 5)]. Allowable bearing on compacted berms may be taken as 2000 psf. When using mudsills supported on soils, however, the designer shall ensure that the soils are adequate to support the applied load and that the soils will not be subject to washout during anticipated weather and curing conditions.

Additional information for presumptive bearing on soil and rock and for foundations is given in the AASHTO guide [AASHTO-Temp 2.4].

11.2.4.3 Section properties

In general, the designer should use published properties for falsework and formwork materials rather than computed properties. For used materials, however, the designer shall account for any critical loss of section when determining section properties.

The designer should be especially careful in determining the section properties for wood products. The properties are not always as expected, as should be evident from the following examples.

- Plywood section properties are dependent on the plies in the direction of stress rather than the full cross section.
- For the same nominal dimension, finished sizes of timber in most cases are different from finished sizes of lumber.

Contractors often use a mix of new and salvaged steel shapes for stringers, caps, walers, and accessories. Unless the proposed shapes are likely to be relatively new, as is the case for HP shapes, the designer should consult a reference that lists properties of shapes produced in the past. *AISC Rehabilitation and Retrofit Guide, Steel Design Guide Series 15* [BDM 11.2.1.5] is a reference that is currently available, and which replaces *Iron and Steel Beams: 1873-1952.* The designer should take a conservative approach and use the minimum properties for the shape depth.

11.2.4.4 Design

For most projects the plans should include a deflection diagram. However, if deflections do not exceed 1/8 inch, a deflection diagram is not required because crushing and take-up will amount to as much as the deflection.

The detailing article requires a bridging system for stringers at supports [BDM 11.2.5], and that system will provide support of the compression flange at the supports. If additional support for the compression flanges of stringers is needed the designer shall provide additional bridging systems between supports.

Timber piles that extend above ground more than 20 feet should be designed as columns with the applied forces and moments.

11.2.5 Detailing

If the designer has assumed that plywood is placed with face grain parallel with the span, the direction of the face grain shall be shown on the falsework plans.

Falsework with joists 2 x 8 or larger shall have bridging over each stringer at each permanent pier and abutment, as shown in Figure 11.2.5-1. Bridging is not required when the joists are smaller than 2 x 8.

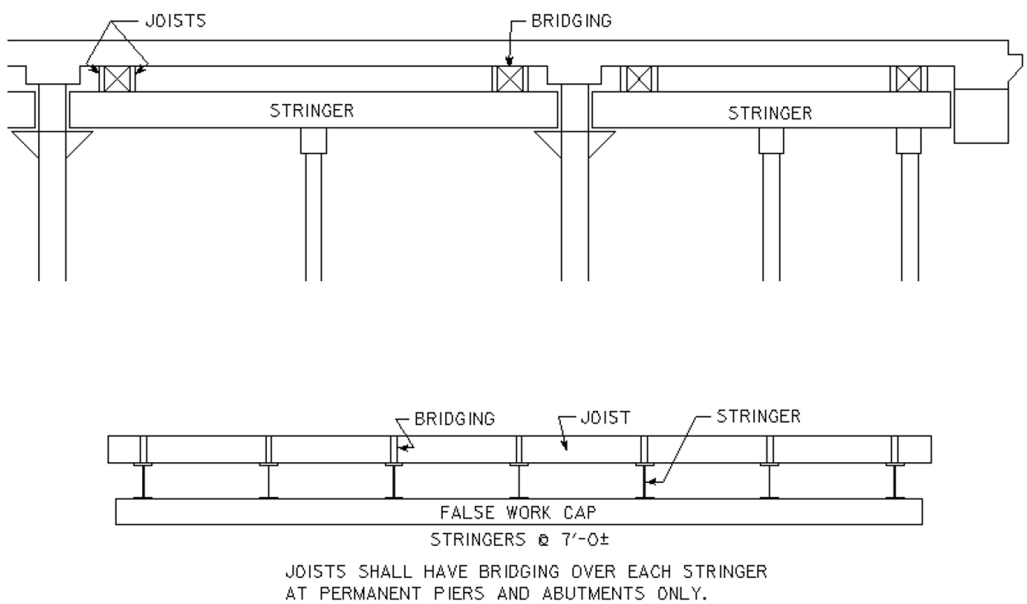

Figure 11.2.5-1. Falsework bridging

For stringers a positive bridging system shall be provided at each support.

Continuous joist and stringer spans shall be secured against uplift.

Caps shall be doweled, drift pinned, or lagged to piles. Timber cap requirements are given in the Iowa DOT specifications [IDOT SS 2409.03, H].

Pile bracing shall be bolted and spiked at ends and at intersections [IDOT SS 2409.03, I].

Concrete mudsills for support of falsework may be attached to integral abutments. For bridges 150 feet or less in length, mudsills may be used with no width or depth restriction. For bridges over 150 feet in length, mudsills attached to integral abutments may be used with the following two restrictions.

- The total width of all mudsills shall not exceed 50% of the out-to-out integral abutment width.
- The depth of mudsill shall not exceed 18 inches as shown in Figure 11.2.5-2.

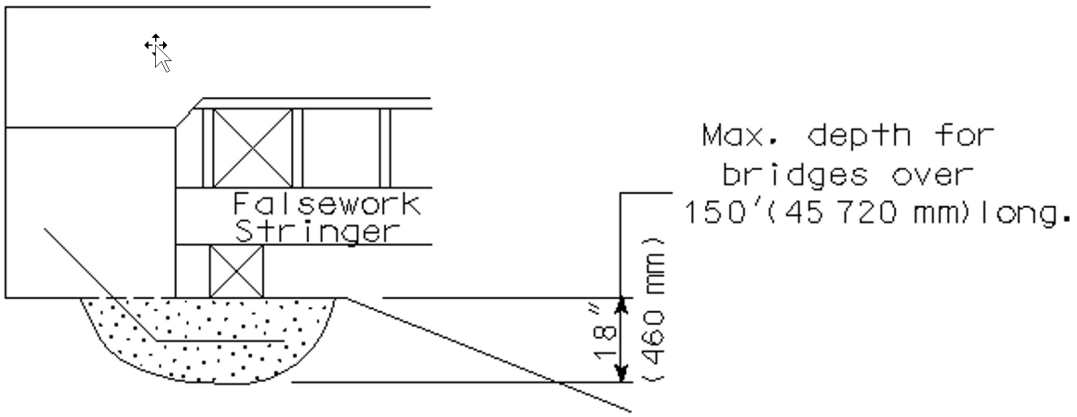

Figure 11.2.5-2. Concrete mudsill

All falsework and formwork accessories shall be positively identified and located on plans. Plans shall show complete details for all designed accessories, and plans shall show manufacturer and accessory designations for all proprietary accessories.

Hangers shall be arranged or secured for unbalanced concrete placement. Hangers over pier piles should be placed to avoid torsion on hanger struts.

11.2.6 Plan review

For cast-in-place concrete slab and concrete girder bridges the Iowa DOT Standard Specifications require that the contractor submit falsework plans for review [IDOT SS 2403.03, L, 7, a]. Plans are reviewed by the Bureau that prepared the original project plans, either the Bridges and Structures Bureau or the engineering consultant.

11.2.6.1 Plan checklist

For falsework review, the plans submitted by the contractor are the source of material, member, connection, and configuration information. If the information is incomplete the reviewer will need to request additional information or make worst-case assumptions that may lead to impractical or uneconomical falsework. The following guidelines are of use to the designer and the reviewer in determining whether falsework plans are sufficient for review [IDOT SS 2403.03, L, 7, a].

- Falsework plans shall be sealed and signed by an Iowa licensed Professional Engineer [IDOT SS 2403.03, L, 1, a].

- Plans should be on sheets of sufficient size to allow for corrections and to facilitate reading and handling. In extreme cases, illegible plans will require resubmission.

- Complete description of the structure should appear on the plans along with design number, county, and project number. A contractor may use the same set of details for different bridges, but each set of plans should be specific for the site.

Some latitude is permissible, but a good set of falsework plans should include the following.

(1) Plan of structure
  (a) Bridge spans, width of deck, and location of stage joint (if any).
  (b) Span length between falsework supports.
  (c) Transverse spacing and lengths of stringers.
  (d) Orientation of plywood sheets if advantage is taken of increased strength parallel with face grain.

(2) Elevation or Longitudinal Section of Structure.
  (a) Location of falsework supports including height of bent, pile bearing, and pile lengths for specific bents.
  (b) Longitudinal X-bracing or knee bracing for pile bents over 10 feet in height, if bents are not positively attached to the stringers [IDOT SS 2403.03, L, 3, c].
  (c) Details of shores or posts on sills that must be braced laterally and longitudinally.
  (d) Stringer material, size, and span with section oriented correctly for maximum strength.
  (e) Stringer bearing details and as required, attachment details to supporting caps and brackets.
  (f) Details of hanger-waler system at pier cap.
  (g) Support bracket details at abutments.
  (h) Transverse joist size, spacing, and some system to prevent individual collapse. If stringers are wood, toe-nailing will hold the joist bottoms in place. If stringers are steel, bottoms of joists should be spaced with a longitudinal wood strip, by a nailer attached to the stringer, or by bridging.
  (i) Sheathing type, thickness, and grade or commercial name. Orientation of plywood may be shown on the longitudinal section.

(3) Cross Section of Structure
  (a) Pile spacing, height of bents, and minimum embedment of piles for bents 10 feet or less in height, if piles provide lateral stability without sway bracing.
  (b) Cap material, size, and method of attachment to piles.
  (c) Stringer spacing on cap and attachment of stringers to cap if appropriate and if not shown elsewhere.
  (d) Provision for shimming, wedging, or jacking for height adjustment.
  (e) Sway bracing for bents over 10 feet high. Bracing shall be at least 2 x 10, but 3 X 8 bracing is preferable.
  (f) Heights of bents, pile bearing, and pile lengths, if not shown on the longitudinal section.
  (g) Bridging or diaphragm system for stringers over each falsework support. In addition to the system at supports, intermediate bridging may be needed to support the stringer compression flange. Wood joists without a bolted nailer are not considered as support for a steel stringer compression flange.

(4) Falsework Deflection Diagram
  The deflection diagram usually is necessary for setting the screed rails. The 1/800 of the span length or 1.0-inch deflection limits in the Iowa DOT Standard Specifications [IDOT SS 2403.03, L, 6, a] refer to the final bridge soffit profile after forms are stripped. For the forms and falsework, deflection of sheathing and joists shall be limited to 1/360 of the span length, but there is no specification limit to the falsework stringer deflection. However, for setting of

the screed rails, if the stringer deflection exceeds 1/4 inch, the designer should provide the deflection diagram.

11.2.6.2 Design review checklist

Procedures for reviewing falsework plans will vary with each project. The following checklist is only a guide for the reviewer, assuming a design using the traditional Iowa DOT standard described in these articles and must be used with engineering judgment.

(1) Floor sheathing
- (a) Thickness, grade, and type of plywood sheathing should be shown on plans. If the type of sheathing is not shown, request the type from the contractor. The default grade listed in the Iowa DOT Standard Specifications [IDOT SS 2403.03, L, 5, c, 2)], Plyform Class I, should be used in the check only if the sheathing is of that quality or better.
- (b) Orientation of face grain plies should be shown on plans. If the orientation is not shown, assume it to be the unfavorable case, face grain perpendicular to span.
- (c) Determine the load for concrete, forms, and construction.
- (d) Consider the sheathing to be continuous over three spans.
- (e) Check the joist spacing using tables in ACI's *Formwork for Concrete.*
- (f) If the joist spacing is inadequate for face grain perpendicular to span but is adequate for face grain parallel with span, note the required orientation on the plans but do not recommend a change in joist spacing.

(2) Wood joists
- (a) Determine the joist load, including the joist weight.
- (b) Consider the joists continuous over three spans unless stringer spacing exceeds 6 feet (1.830 m).
- (c) Use moment, shear, and deflection formulas in ACI's *Formwork for Concrete.*
- (d) Review the critical bending stresses.
- (e) Review the critical shear stresses. Allow for the overhang at edge form and safety rail.
- (f) Review the maximum bearing stress on stringers.
- (g) Review deflection as required by Iowa DOT specifications [IDOT SS 2403.03, L, 6, b]
- (h) Verify the presence of bridging or other provision for joist stability above steel stringers.

(3) Wood stringers
- (a) Determine the stringer load, including the stringer weight. Because concentrated loads from joists are closely spaced, consider the joist load to be uniform for the stringer tributary area.
- (b) Review the possibility of uplift due to continuity.
- (c) Use moment, shear, and deflection formulas in ACI's *Formwork for Concrete.*
- (d) Review the critical bending stresses.
- (e) Review the critical shear stresses.
- (f) Review the maximum bearing stress on stringers at cap.
- (g) Review deflection as required by Iowa DOT Standard Specifications [IDOT SS 2403.03, L, 6, b]. For most projects the plans should include a deflection diagram. However, if deflections do not exceed 1/8 inch, a deflection diagram is not required because crushing and take-up will amount to as much as the deflection.
- (h) Verify that the stringers have bridging at supports and at intermediate intervals of 8 to 10 feet.
- (i) Verify the stability of blocking, jacking, wedging, etc.

(4) Steel stringers
- (a) Determine the stringer section properties. If the steel shape designation is not current and properties are not given on the plans, use the most unfavorable section properties for the shape depth as given in *AISC Rehabilitation and Retrofit Guide, Steel Design Guide Series 15* or the previous publication *Iron and Steel Beams.*

(b) Determine the stringer load, including the stringer weight. Because concentrated loads from joists are closely spaced, consider the joist load to be uniform for the stringer tributary area.
(c) Review the possibility of uplift due to continuity.
(d) Determine the steel grade and allowable stresses. If steel grade is not specified on the plans, use the allowable stresses given in the AASHTO guide [AASHTO-Temp 2.1.2].
(e) Review the critical bending stresses. Note that the compression flange will be critical; review for intermediate support of the compression flange. The compression flange support can be provided by a system of bridging or x-bracing with tension rods. The bridging or bracing should be full depth of the stringer web, should be detailed, and should be located on the plans.
(f) Review the critical shear stresses and web buckling. Verify that there is bridging or x-bracing at supports for stability.
(g) Review the bearing on wood caps and walers.
(h) Review deflection as required by Iowa DOT Standard Specifications [IDOT SS 2403.03, L, 6]. For most projects the plans should include a deflection diagram. However, if deflections do not exceed 1/8 inch, a deflection diagram is not required because crushing and take-up will amount to as much as the deflection.
(i) Stringers may need to be attached to caps and, if so, the attachment should be shown on the plans. Check the stability of any jacks, shims, wedges, etc. under stringers.

(5) Timber caps and walers
(a) Timber caps should be a minimum of 10 x 10 nominal and should not be built up of smaller members.
(b) Determine the stringer reactions that will be applied as concentrated loads to the cap. Cap weight may be lumped and applied with the stringer loads or neglected.
(c) Use moment and shear formulas in ACI's *Formwork for Concrete.*
(d) Review the critical bending stresses.
(e) Review the critical shear stresses. Allow for an overhang, if present.
(f) Review the maximum bearing stresses on the cap at stringers and at piles.
(g) Verify the attachment of cap to piles.
(h) Review the capacity of hangers or brackets for walers.

(6) Steel caps and walers
(a) Determine the cap section properties. If the steel shape designation is not current and properties are not given on the plans, use the most unfavorable section properties for the shape depth as given in *AISC Rehabilitation and Retrofit Guide, Steel Design Guide Series 15,* or the previous publication *Iron and Steel Beams.*
(b) Determine the stringer reactions that will be applied as concentrated loads to the cap. Cap weight may be lumped and applied with the stringer loads or neglected.
(c) Use moment and shear formulas in *Formwork for Concrete* by ACI.
(d) Review the critical bending stresses.
(e) Review the critical shear stresses.
(f) Review reaction points for stiffeners. Edge bearing of steel stringers will generally require stiffeners to avoid flange crippling of the cap or walers.
(g) Verify the attachment of cap to piles.
(h) Verify that bents over 10 feet tall with steel stringers on steel caps have longitudinal bracing.
(i) Review the capacity of hangers or brackets for walers.

(7) Piles
(a) Determine the total load to be applied to the bent and distribute the load equally to all piles.
(b) Review the pile load shown on the plans.
(c) Review the pile length and minimum embedment for lateral stability, if pile bents are not sway braced. If braced, review sway bracing.

(8) Post or framed bent on sill
- (a) Verify that the bent is braced laterally and longitudinally. Bracing is required for any height.
- (b) Review cap and sill. Refer to (5) and (6) checklists above as needed.
- (c) Verify that cap and sill are attached to posts.
- (d) Verify that sill is attached to pile support, or check that sill has adequate bearing area on soil.
- (e) Review posts as columns.

(9) Pier caps
- (a) Verify arrangement of brackets, hangers, and walers. The arrangement must accommodate unbalanced loads and must not load single legs of hangers, which would cause torsion.
- (b) Check column collar brackets. If brackets are proprietary, specific catalog information must be supplied with the falsework plans.
- (c) Check hanger capacity with stringer reactions as concentrated loads on the waler. If hangers are proprietary, specific catalog information must be supplied with the falsework plans. Note that catalogs may give the rated hanger capacity either for a single leg or for both legs.
- (d) Check soffit sheathing for face grain across supports.
- (e) Verify that side forms are supported with studs or blocked against kick-out.

(10) Abutment brackets
- (a) Verify that stringer blocking is provided where needed. Stringer deflection will cause edge bearing.
- (b) Verify that brackets are stiffened.
- (c) Consult form accessory references for pull-out and shear ratings. Extrapolate design ratings if the accessory is adapted for use as an abutment bracket.
- (d) Check tension and shear on bolts. Assume A307 bolts unless plans specify a higher grade.

11.2.6.3 Reviewed copy distribution

For those projects for which review is required, distribution of six reviewed copies will be made as follows:

1 – Bridges and Structures Bureau copy for bridge file with comments in red and with initials of reviewer and date
1 – Construction and Materials Bureau copy with comments in red
2 – Resident Construction Engineer (RCE) with comments in red
2 – Contractor with comments in red

C11 Falsework design

C11.2.2 Load application

The construction wind load of 50 psf for a 100 mph wind speed at heights to 30 feet is the same as the wind load specified during construction of PPCB [BDM 5.4.2.2.5] and CWPG bridges [BDM 5.5.1.2.6]. That load is conservative because it was taken by the Bureau to be the same as the permanent wind load for bridges during service as given in the AASHTO Standard Specifications [AASHTO 3.15].

If the falsework construction wind load were taken from the *AASHTO Guide Design Specifications for Bridge Temporary Works* for non-heavy-duty shoring systems, the wind speed map would indicate 80 mph or less [AASHTO-Temp Figure 2.1]. The load for the lowest height zone to 30 feet then would be 20 psf or less [AASHTO-Temp Table 2.2].

The formwork construction wind load may be even less, set at a minimum of 15 psf by the AASHTO guide [AASHTO-Temp 3.2.3].

Even though the formwork and falsework wind load given in this article [BDM 11.2.2] is conservative, the Bureau prefers to require the load to ensure lateral stability of the falsework. In some cases, it may be difficult to evaluate other lateral loads, but in any case, the designer needs to consider the largest load.

C11.2.3 Service load groups

The AASHTO guide refers to the *National Design Specification for Wood Construction* (NDS) for modification factors for wood structural components [AASHTO-Temp 2.1.3.2], but also lists a percentage of allowable stress of 133% for Load Groups III and IV that would further increase allowable stresses [AASHTO-Temp Table 2.3]. The 133% increase should be neglected for wood structural components; the Bureau requires that the allowable stresses be adjusted for load duration factors instead of the percentages of allowable stress.

ACI's *Formwork for Concrete* makes a distinction between wood formwork for limited reuse that may be designed as a temporary structure and wood formwork with considerable reuse that should be designed as a permanent structure. The distinction affects the load duration factor and has the effect of lowering allowable stresses for the considerable reuse condition. For typical bridge projects the designer may assume limited reuse.

Generally, the AASHTO guide [AASHTO-Temp C2.1.3 and 2.1.3.2] and ACI's *Formwork for Concrete* consider 1.25 as the appropriate load duration factor for wood formwork and falsework under dead and live loads and consider the condition of lumber and timber members to be dry. The authors of NDS formwork examples argue for different conditions. For plywood they use a load duration factor of 1.45 rather than the APA combined load duration and experience factor (or concrete setting factor) of 1.625. The 1.45 factor is associated with a one or two hour concrete set, whereas 1.625 is about the same as the wind factor of 1.60 associated with a 10-minute period. The authors also use the 1.45 load duration factor for studs and wales and consider those members to be in a wet use condition. Although the NDS example authors have reasonable arguments the Bureau prefers the more conventional AASHTO and ACI use of load duration and wet use factors.

C11.2.4.2.3 Dimension lumber and timber

The allowable stresses for dimension lumber and timber vary widely with size or use category, species, grade, and adjustment factors. In the past falsework has been designed and checked on the basis of allowable stresses published in the Iowa DOT Standard Specifications, unless the contractor certified a higher grade. At the time many years ago when the allowable stresses were determined, the species groups available locally often were douglas fir-larch and southern pine, for which the stresses were intended. However, there have been significant changes in recent years. First, the design values in the *National Design Specification for Wood Construction Supplement* (NDS Supplement) have been revised significantly downward or upward in some cases, and the revisions are most apparent for timber. Second, spruce-pine-fir (SPF) now, depending on U.S.-Canadian trade relations, is one of the more commonly available species groups in Iowa, and the species group typically has lower design values than douglas fir-larch or southern pine. Periodically there are other species groups available with even lower design values. Based on the discussion above, the design values in the Iowa DOT Standard Specifications have been revised to account for

revisions to the NDS Supplement and use of SPF in formwork and falsework.

C11.2.4.2.4 Piles

Pile design in the Bridges and Structures Bureau has transitioned from allowable stress design (ASD) to load and resistance factor design (LRFD) but, because the *AASHTO Guide Design Specifications for Bridge Temporary Works* remains an ASD guide, falsework piles should be designed by the ASD method. The designer should be aware of two issues: allowable bearing values based on type of soil and allowable driven bearing values determined by formula.

In the past allowable unit pile bearing values for typical soil types that were used to estimate the required pile length were obtained from *Foundation Soils Information Chart, Pile Foundation,* a publication of the Soils Design Unit commonly called the "Blue Book". If this publication is not available, use the following work-around:

(1) Print the LRFD nominal geotechnical resistance tables in the pile section [BDM Tables 6.2.7-1 and 6.2.7-2].
(2) Select kips or ksi end bearing values and kips/foot friction bearing values appropriate for the soils at the falsework site.
(3) Correct the LRFD resistances to ASD bearing values by dividing by 4. The divisor adds a safety factor of 2 and changes the units from kips to tons. Allowable end bearing values then will be in tons or tons/square inch, and allowable friction bearing values will be in tons/foot. (For steel H-piles the Blue Book end bearing values were given inconsistently in psi.)

Example: A wood pile in cohesive material with a mean N_{60}-Value of 20

(2) Select 24 kips (LRFD end bearing resistance)
(3) Divide by 4: 6 tons (ASD end bearing)

Example: A steel HP 10x57 in cohesive material with an N_{60}-Value of 50

(2) Select 4 ksi (LRFD end bearing resistance)
(3) Divide by 4: 1 ton/square inch (ASD end bearing to be multiplied by pile cross sectional area)

Typically, piles are driven with construction control either by wave equation analysis (WEAP) or by formula. If WEAP software is to be used to develop driving graphs for falsework piles, the input should include a safety factor. For production piles the Construction and Materials Bureau used a safety factor of 2.2, and that same factor may be used for falsework piles.

Driving formulas are given in the Iowa DOT Standard Specifications [IDOT SS 2501.03, M, 2]. Although the 2012 Standard Specifications had ASD formulas, the formulas will be converted to LRFD by multiplying the numerator constants by 4 at some time after 2012. The English ASD numerator constants, in order for the four formulas are: 3, 4.5, 3, and 7. The English LRFD constants in the same order will be 12, 18, 12, and 28. After the Standard Specifications are revised, the falsework designer working in ASD will need to divide the numerator constant in the appropriate formula by 4.

The allowable load for timber piles has varied in Iowa DOT specifications and documents. The maximum allowable bearing value of 20 tons given in the BDM article [BDM 11.2.4.2.5] generally is consistent with Iowa DOT guidelines for short piles. For falsework the contractor normally will be using short piles, and thus the 20-ton guideline fits typical construction practice. The ASD 40-ton driving limit in the 2012 Iowa DOT Standard Specifications [IDOT SS 2501.03, O, 2, c] is intended to prevent overdriving damage to piles.

For many years it has been Bureau practice to require sway bracing for pile bents when their height is more than 10 feet. Without sway bracing for lesser heights, however, it is possible that piles will not be embedded sufficiently to carry lateral loads of the falsework, especially if minimum embedment length is not shown on the falsework plans. To ensure that the designer considers lateral loads, the Iowa DOT Standard Specifications and several BDM articles have been revised to require that the minimum embedment length be shown on the falsework plans.

TABLE OF CONTENTS ~ BRIDGE AND CULVERT REPAIR

12 Bridge and culvert repair
- 12.1 Bridge repair
  - 12.1.1 Policy overview
  - 12.1.2 Design information
  - 12.1.3 Definitions
  - 12.1.4 Abbreviations and notation
  - 12.1.5 References
  - 12.1.6 Field exams
  - 12.1.7 Rating
  - 12.1.8 Staging and sequencing
    - 12.1.8.1 Structural considerations
    - 12.1.8.2 Construction considerations
    - 12.1.8.3 Temporary barrier rail
  - 12.1.9 Programmed projects
    - 12.1.9.1 Repair
      - 12.1.9.1.1 Deck repairs
      - 12.1.9.1.2 Overlays
      - 12.1.9.1.3 Deck joints
      - 12.1.9.1.4 Drains and scuppers
      - 12.1.9.1.5 Curbs
      - 12.1.9.1.6 Miscellaneous concrete
      - 12.1.9.1.7 Backwalls and diaphragms
      - 12.1.9.1.8 Shotcrete
      - 12.1.9.1.9 Asbestos
    - 12.1.9.2 Retrofit
      - 12.1.9.2.1 Doweled bars
      - 12.1.9.2.2 TL-4 barrier rails
        - 12.1.9.2.2.1 Standard section
        - 12.1.9.2.2.2 End sections
      - 12.1.9.2.3 Cover plates
      - 12.1.9.2.4 Other
    - 12.1.9.3 Strengthening steel members
      - 12.1.9.3.1 Beams and girders
      - 12.1.9.3.2 Other
    - 12.1.9.4 Replacements
      - 12.1.9.4.1 Approach pavement
      - 12.1.9.4.2 Decks
      - 12.1.9.4.3 Other
    - 12.1.9.5 Coatings
      - 12.1.9.5.1 Scrape tests
      - 12.1.9.5.2 Cleaning and painting
      - 12.1.9.5.3 Concrete sealer
      - 12.1.9.5.4 Other
  - 12.1.10 Emergency projects
    - 12.1.10.1 PPCB overpass repair
    - 12.1.10.2 Steel beam or girder overpass repair
    - 12.1.10.3 Other
  - 12.1.11 Concept statements
  - 12.1.12 Design documents
    - 12.1.12.1 Drawings
    - 12.1.12.2 Specifications
    - 12.1.12.3 Notification of repairs
- 12.2 Culvert repair

12 Bridge and culvert repair

12.1 Bridge repair

For bridge repair the Bureau currently is in transition from the AASHTO 2002 Standard Specifications to the AASHTO LRFD Specifications. During the transition Bureau policy is outlined below.

- The designer shall use the LRFD Specifications for a complete replacement of the superstructure involving both beams and deck. If the superstructure replacement results in additional load, the designer shall check the substructure using the 2002 Standard Specifications.
- The designer may use either the 2002 Standard Specifications or the LRFD Specifications for less significant repairs such as:
    - Minor widening with one or two new beam lines,
    - Replacement of the deck or barrier rails,
    - Repairs to piers or abutments,
    - Replacement of individual beams, or
    - Minor repairs to beams, bearings or barrier rails.

Using different specifications in design of bridge components can cause rating problems, however, and the designer shall consult with the Bridge Rating Engineer in cases where using the AASHTO LRFD Specifications may result in less capacity than the AASHTO 2002 Standard Specifications.

12.1.1 Policy overview

In general, there are two types of bridge repair projects: programmed and not programmed. Programmed projects are either bridge repair projects, deck overlay projects or deck replacement projects. Projects that are not programmed are emergency repairs to bridges that have been damaged by vehicles with overheight loads, vehicle crashes, fire, fatigue, or accelerated deterioration.

Bridge repair projects can include a single repair, but most projects include multiple repairs. A project may involve any of the following:

- Deck repairs
- Joint repair or replacement,
- Bearing repair or replacement,
- Drain and scupper repair,
- Curb repair,
- Backwall and diaphragm repair,
- Barrier rail retrofit,
- Steel cover plate end retrofit,
- Steel member strengthening,
- Approach pavement replacement,
- Steel cleaning and painting, and
- Concrete surface sealing.

A repair project, as well as a deck overlay or deck replacement project, may involve paving of the adjacent roadway, strengthening of shoulders, replacing of guardrails, and other improvements to the highway. For that reason, the designer will need to closely coordinate these types of projects with the District and the Design Bureau (DB).

The basic purpose of most deck overlay projects is to overlay a bridge deck with 1 3/4 inch of low slump concrete. Before the overlay is placed, concrete is removed from the original bridge deck, and the deck is repaired. If the deck has either a hot mix asphalt (HMA) overlay or a previous portland cement concrete (PCC) overlay, the existing overlay always is removed before placing the new overlay. Deck overlay projects also may involve any of the bridge repairs listed above that are necessary to bring the structure

to a reasonable condition, especially full depth deck repair, bridge joint repair or replacement, abutment backwall and diaphragm repair, and bridge rail retrofit.

Deck replacement projects are generally reserved for bridges with significant deck deterioration, but still have superstructure (e.g. beams) and substructure in a good condition. In most cases, the bridge will have already had one or two bridge deck overlay projects. The bridge live load rating with the new dead loads should be considered. Determining whether a bridge has sufficient roadway width on the bridge is also an important factor when considering whether to replace a deck. Deck replacement projects may involve some of the bridge repairs listed above that are necessary to bring the structure to a reasonable condition, especially abutment backwall and diaphragm repair.

Projects that obstruct a waterway identified on the DNR Paddling Map (see BDM 3.2.2.11 for a link) will include notification to the DNR and signage to make recreational users aware of the paddling route closures that will be in place for the duration of the project construction. See BDM 3.2.2.11 for a full discussion of the requirements including the list of project types affected. The concept letter templates include language for the designer to address these requirements in the concept. If signage is required, designers shall verify restricted paddling signage is included on the roadway sheets.

When beginning a programmed project, the designer should

(1) Check the contract letting schedule;
(2) Review special instructions for other repairs adjacent to the bridge;
(3) Review current repair policies;
(4) Review the bridge files available in the SIIMS database, including plans, photos, and inspection reports;
(5) Review Program Recommendations and Maintenance Recommendations in SIIMS;
(6) Determine the rated capacity of the bridge based on proposed repairs;
(7) Organize a checklist for the field exam;
(8) Conduct the field exam for the structure;
(9) Review the scope of project with the supervising Unit Leader; and
(10) Write a concept letter.

After the concept is approved, the designer can begin final design.

It is common on some programmed repair projects, for a significant amount of time to pass between concept development and final design. Therefore, the designer shall review the concept statement along with all relevant updates to the SIIMS documentation prior to starting final design. The designer will decide if the intended scope of work in the concept is still appropriate. Any scope adjustments to the concept shall be reviewed with the supervising Unit Leader. The designer shall initiate communication with the District, Traffic and Safety Bureau, and Design Bureau early on regarding the concept traffic control statement, staging, and anticipated closure periods.

Consultants shall proceed as described in the above paragraph. In addition, they shall email the Bureau's Consultant Coordination Unit, Project Development Engineer, Bridge Inspection Engineer and Bridge Preservation Engineer after their concept review, indicating their agreement with the scope of work as outlined or, if needed, any proposed modifications to the scope of work. BSB will respond acknowledging their acceptance or rejection of the Consultant's recommendation.

Emergency repair projects must proceed on an accelerated schedule and close coordination with the District. In general, an emergency project will include an evaluation for traffic restriction, a field exam, a concept, and a final design.

12.1.2 Design information

For a repair project, the designer needs to make use of information from other Bureaus and groups at the Iowa Department of Transportation. The Bridge Maintenance and Inspection Unit will make recommendations for repair based on biennial inspections. The recommendations will be documented in

the SIIMS database. The District will supply a deck sounding plot for a deck repair or overlay project when requested, the Location and Environment Bureau (LEB) will provide paint scrape tests when requested, the Construction and Materials Bureau (CMB) will provide testing when needed, and the Design Bureau will provide roadway information and traffic control information for repair projects. The Traffic and Safety Bureau (TSB) will review traffic control plans for high traffic areas.

Traffic volumes or Average Daily Traffic (ADT) on the title sheet of repair plans shall always be the sum of the ADT in both directions regardless of whether or not the highway is divided. The designer shall label the ADT on the plan title sheet as “Includes WB and EB Lanes” or “Includes NB and SB Lanes” as appropriate. Since ADT in both directions is required to establish traffic control plans, including the labels with ADT will remove any ambiguity. The ADT listed for repair of ramp bridges shall only include the ADT of the ramp and shall be labelled “Ramp lane(s) only.”

Deck sounding/survey plots for first-time bridge deck overlay projects are typically performed using non-destructive evaluation (NDE) techniques. Currently automated acoustic sounding (AAS) is the NDE technique commonly used to produce sounding plots. The Bridge Preservation Engineer works with the Special Projects Engineer to schedule AAS for first-time bridge deck overlay projects two years prior to project letting. AAS plots include patched, spalled, and delaminated (hollow) areas on the deck as well as cracks in the top of the deck. AAS plots are placed in SIIMS and can be placed directly into plan sets. If an AAS plot is not available contact the Bridge Preservation Engineer to request the District to provide an audible/visual sounding plot. The District will conduct a site visit to prepare a plot based on visual inspection and deck sounding by manual chain drag and hammer. All hollow, spalled, and patched areas should be included in the District’s deck survey plot. Deck survey plots for first-time bridge deck overlay projects shall be included in plan sets, but shall only include delaminated areas designated as Class A deck repair areas and, when required, Class B deck repair areas. Manual deck sounding for re-overlay projects are performed after letting once the existing overlay has been removed.

The Bridge Maintenance and Inspection Unit often makes recommendations for repairs and includes them in the regular inspection report, which is available in the SIIMS database. The recommended repairs shall be included in the design plans when the repairs are of immediate concern and when they affect bridge load capacity. The need for these repairs should be verified during the field exam. Based on observations from the field exam and the bridge documentation file, the supervising Unit Leader will decide which repairs to include in the project.

Whenever a repair project involves painted parts of the existing bridge the paint shall be tested to determine whether it is expected to generate hazardous waste. Early in the design process the designer should contact the Location and Environment Bureau to request a scrape test. Results of the scrape test shall be included on the plans. If the results of the scrape test and bridge repairs require removal of hazardous paint, the supervising Unit Leader shall inform the Location and Environment Bureau of the need for an Environmental Protection Agency (EPA) hazardous waste identification number for disposal of the paint.

The Construction and Materials Bureau will be available to perform testing, such as deck cores and chloride content. Cores provide helpful information for large areas of suspected Class B bridge deck repair and for soundness of deck when considering a second overlay. The designer shall discuss need for testing with the supervising Unit Leader.

New railing policy for interstate and primary highway bridges affects major repair projects involving deck replacement, superstructure replacement, and widening. If a major repair project is initiated in the Design Bureau’s Pre-Design Unit, that unit will determine the required Test Level (and associated height) for the railing. Otherwise, the Preliminary Bridge Design Unit in the Bridges and Structures Bureau (BSB) will determine the required Test Level. However, new railings are not required if an interstate or primary highway project is determined to be a rail retrofit project. For rail retrofit projects the designer shall use the standard designs [BSB SS 1031-1031T].
The Design Bureau will design the shouldering, guardrail, bridge approach pavement, and traffic control including floodlighting, traffic signals, and pavement markings that are required for deck repair plans. The

Bridges and Structures Bureau will be responsible for the temporary barrier rail (TBR) layouts except where the bridge has a sidewalk, bicycle lane, shared use path, or another special situation. In those situations, the TBR layouts will be completed as a joint effort of the Bridges and Structures Bureau and the Design Bureau. For staged construction and other construction situations that involve traffic control in high traffic volume areas the designer should coordinate the design directly with the Traffic and Safety Bureau and ensure that the Design Bureau is informed of the traffic control plans.

IDOT SS 1105.11, D and Chapter 11 of the Construction and Materials Bureau's (CMB) Construction Manual have established limits for construction loading. If the limits are exceeded the contractor will be required to submit for review and approval a structural analysis by an Iowa-licensed engineer. Thus the designer may be required to review construction loads after letting of the repair contract.

12.1.3 Definitions

Bridge Deck Overlay consists of removing deck concrete to a depth ¼ inch below the existing surface, transporting the existing concrete removed from the project, and placing a concrete course of a designated depth. See the Iowa DOT Standard Specifications for the complete definition [IDOT SS 2413.01,C,]. Also, see the Bureau standard sheet [BSB SS 1038].

Class A bridge deck repair includes removing deck concrete less than full depth. See the Iowa DOT Standard Specifications for the complete definition [IDOT SS 2413.01, B, 1]. Also, see the Bureau standard sheet [BSB SS 1038].

Class B bridge deck repair includes removing deck concrete for full depth. See the Iowa DOT Standard Specifications for the complete definition [IDOT SS 2413.01, B, 2]. Also, see the Bureau standard sheet [BSB SS 1038].

Scrape test refers to the scratch test mentioned in the standard specifications [IDOT SS 2508.01]. Scrape test and scratch test are interchangeable terms for the same test.

12.1.4 Abbreviations and notation

ADT, average daily traffic
BRIS, BRridge Information System, a record of design projects on the Iowa Department of Transportation website (accessible to Iowa DOT personnel only)
CADD, computer aided design and drafting
CIP, cast in place
CWPG, continuous welded plate girder
EPA, Environmental Protection Agency
ERMS, Electronic Records Management System (accessible from within the Iowa DOT only)
HMA, hot mix asphalt, which includes asphalt cement as a binder. Many older Iowa DOT documents refer to this material as asphalt cement concrete (ACC).
NDT, nondestructive testing
NHS, National Highway System, composed of Interstate and Commercial and Industrial Network. See the detailed listing of highways and map in the manual introduction [BDM 1.3].
LEB, Location and Environment Bureau
PCC, portland cement concrete
PPCB, pretensioned prestressed concrete beam
RSB, rolled steel beam
SIIMS, Structure Inventory and Inspection Management System
TBR, temporary barrier rail

12.1.5 References

Albrecht, P., A. Sahli, and D. Vannoy. *End Bolted Cover Plates: Fatigue Strength of Retrofitted Cover Plate Ends, FHWA/MD-82/02*. Department of Civil Engineering at University of Maryland, 1983.

American Association of State Highway and Transportation Officials (AASHTO). *Guide Specifications for Fatigue Evaluation of Existing Steel Bridges* with *1993 and 1995 Interims*. Washington: AASHTO, 1990.

Federal Highway Administration (FHWA). "NCHRP Report 350 Hardware." (The web site is at http://safety.fhwa.dot.gov/fourthlevel/pro_res_road_nchrp350.htm.)

Klaiber, F.W., T.J. Wipf, F.M. Russo, R.R. Paradis, and R.E. Mateega. *Field/Laboratory Testing of Damaged Prestressed Concrete Girder Bridges, Final Report, HR 397*. Ames: Iowa Department of Transportation and Department of Civil and Construction Engineering at Iowa State University, 1999. (Available on the Internet at:https://iowadot.gov/research/reports/Year/2003andolder/fullreports/hr397.pdf)

Construction and Materials Bureau. *Construction Manual.* Ames: Construction and Materials Bureau, Iowa Department of Transportation, 2006. (Available on the Internet at: http://www.iowadot.gov/erl/current/CM/Navigation/nav.pdf)

Pfeifer, B.G., R.K. Faller, J.C. Holloway, and E.R. Post. *Full-Scale 18,000 lb. Vehicle Crash Test on the Iowa Retrofit Concrete Barrier Rail, Transportation Research Report TRP-03-19-90.* Lincoln: Civil Engineering Department at University of Nebraska-Lincoln, 1990. (This report certified that the Iowa retrofit concrete barrier rail met the criteria for the AASHTO PL-2 performance level, which FHWA later evaluated as equivalent to NCHRP 350 Test Level-4. See "NCHRP Report 350 Hardware" above.)

Ross, H.E., D.L. Sicking, R.A. Zimmer, and J.D. Michie. *Recommended Procedures for the Safety Performance Evaluation of Highway Features, NCHRP Report 350.* Washington: Transportation Research Board, National Research Council, 1993. (Available on the Internet at http://gulliver.trb.org/publications/nchrp/nchrp_rpt_350-a.pdf and -b.pdf)

12.1.6 Field exams

A programmed bridge repair, overlay project or deck replacement project is typically initiated by the Bridges and Structures Bureau in cooperation with the District. It is the designer's responsibility to do the following:

- Review the request;
- Request a survey of site utilities from the District [Consultants shall provide a One Call (811) Design Information Request of the utilities];
- Review the bridge plan, inspection, and rating files;
- Check the bridge rating;
- Arrange a field exam of the bridge;
- Conduct the field exam;
- Consult with the supervising Unit Leader; and
- Prepare a concept statement [BDM 12.1.11].

All items should be completed before preparing plans and specifications for the repairs.

During 2003 the bridge inspection and other documentation files were scanned and converted to electronic form. The bridge plan, inspection, photo, rating, and other files now are available in SIIMS. The designer should access SIIMS and review the files for the bridge to be repaired, especially the plans and the full-depth inspection report. The designer should view the bridge in Google Maps (or equivalent), including Street View, prior to the field exam to preview the bridge deck, rail, joint, approach slab, and drainage conditions.

The designer should check the design history for the bridge and ensure all original plans and previous repair plans are available during the field exam. If the bridge has not been coded for repair, the designer should notify the bridge maintenance and inspection group of the planned repair so that inspection teams can schedule their regular biennial inspections for the bridge with due consideration of the repair project.

After reviewing the repair request and the bridge files in SIIMS, the designer should plan for and schedule the field exam. The field exam should include input from the District and the Design Bureau. When

organizing the field exam the designer should contact the District Maintenance Manager and the appropriate unit leader in the Design Bureau so that representatives from those Bureaus can participate in the field exam. The field exam date should be coordinated with the Design Bureau, the District Maintenance Manager, and others (See the cc: list for the Concept Statement in the commentary [BDM C12.1.11].) so that all interested parties can attend.

Although a programmed repair project initially may be proposed as a deck overlay or deck replacement, the project may need to include several other repairs to bring the bridge to an acceptable condition. The additional repairs may involve joint and backwall repair, retrofit barrier rails, guardrail update, and approach work. Usually all the repair work is performed under traffic and thus will require traffic control. In many cases the repairs will require staging.

The following guidelines provide an organized process for examining the bridge. Although the guidelines cover typical repairs, the designer should document any additional conditions that may need repair. In addition to taking notes, the designer should make dimensioned sketches and take ample photographs.

(1) Deck
- (a) If possible, check the depth of the cover over the top reinforcement, to determine if concrete can be removed to the one-quarter-inch deep specification requirement for Bridge Deck Overlay, except in areas planned for Class A bridge deck repair or Class B bridge deck repair [IDOT SS 2413.01]. If shallow reinforcement in the top of the deck is suspected based on inspection information in SIIMS check with the District if they can use a pachometer to determine depth of cover. If shallow reinforcement is suspected during the site visit ask the District if they can follow up on determining depth of cover with a pachometer. Include any findings about shallow reinforcement in the concept.
- (b) Check the underside of the deck for possible full depth repair areas, which are identified as Class B bridge deck repair [IDOT SS 2413.01, B]. Dampness on the underside of the deck often indicates areas in need of full depth repair. While in the field, draw a sketch with dimensions to locate the Class B repair, and locate the areas on the plans. If the Class B repair has an area more than 5 square yards a separate bid item is required, otherwise it is covered by the standard specifications [IDOT SS 2413.05].
- (c) Check for any areas of the curb that need repair. Make sketches of the areas in the field, and locate them on the plans. Usually curb repair is included in the bid item “Concrete Repair” quantity. Additional information regarding the repair is given in a standard note [BDM 13.5.2, E431] and on a standard sheet [BSB SS 1045].
- (d) Note if an existing overlay is in place on the deck and the type of overlay. Review inspection sketches in SIIMS for measured deck thickness (original deck thickness and deck thickness with overlay, if available) and compare to plan set information for original deck and overlay thickness. If measured deck thickness indicates the existing overlay may be 0.75” thicker (or more) than the plan sets indicate request the District to measure depth to top reinforcement using a pachometer and to measure total deck thickness using a hammer drill to core through the deck. Include any findings about reinforcement cover and deck thickness in the concept.
- (e) Note if existing repairs are in place on the deck. Also note if HMA is present anywhere on the deck.
- (f) Estimate the amount of class A deck repair for decks without overlays in place based on the field exam and the deck inspection sketches in SIIMS.

(2) Joints
- (a) If the joint is an expansion joint, check the joint opening, and record the air temperature. Even if the joint is closed, it does not automatically need to be repaired or replaced. If there is no distress or deterioration of the substructure due to the lack of expansion room or deterioration of the bridge seat due to runoff, the existing joint probably will be retained. Based on the information the designer obtains during the field exam, the supervising Unit Leader will decide whether to repair the joint.
- (b) Check soundness of the joint anchorage, both to the superstructure and the substructure.

(c) If the existing joint is a compression seal, note the position of the seal in the joint and the keeper bar condition.
(d) If the existing joint is a sliding plate joint, plan to replace the joint with a strip seal if possible. Past practice of adding raise plates is generally discouraged.
(e) If the existing joint is a strip seal, check leakage, tears in the seal, detail at curbs, and turn-up detail at the barrier rail. Plan to carry to the field exam the special tool required to remove cap screws that hold the barrier cover plate on the rail.
(f) If the existing joint is a finger joint, plan to taper the overlay to avoid replacing the joint. Review this decision with the Chief Structural Engineer. If the joint has no neoprene trough to direct runoff away from bearings and beam ends, consider retrofitting the joint to add the trough with appropriate drainage details.
(g) Note the existing condition of fixed joint materials.

(3) Approaches
(a) Note the condition and size of the joint between the bridge and approach pavement. Record the type and condition of joint material.
(b) Look for and document evidence of approach pavement repairs, settlement, erosion, and voids. If a portland cement concrete (PCC) approach slab has been mud-jacked to fill voids, there will be filled core holes visible in the top of the slab. Another typical repair is a localized and tapered hot mix asphalt (HMA) overlay. If signs of excessive settlement are present and PCC approach slabs are proposed to be replaced, replacement of the paving notches should be included. The condition of the paving notches will be verified during construction. Replacement paving notches can be deleted if it is found they are not needed during construction.
(c) Note the type of approach surface: HMA, PCC, or gravel. Possible repairs are an HMA wedge, a PCC wedge, or a slab replacement. The proposed repair needs to be coordinated with the Design Bureau. HMA wedges should not be used on NHS routes due to volume of traffic/truck traffic.
(d) If the approach is full depth HMA, a pressure relief joint is not required. However, if the approach is PCC full depth or PCC with an HMA overlay, a pressure relief joint is required.
(e) Document any existing relief joints. Record width, location, and condition.

(4) End posts and wings
(a) Determine if posts or walls are broken. Photograph any damage.
(b) Determine if a guardrail is attached to each end post or wing and the type of guardrail.
(c) Determine if erosion is present around wings. Potential erosion mitigation includes armoring the wings, installing rock flumes and installation of raised curbs on the first approach panels.

(5) Backwalls
(a) If the full-depth inspection report in the bridge documentation file recommends any backwall repairs, examine the locations of those recommended repairs first. Sound the backwall with a hammer as needed and sketch hollow areas.
(b) Check the top of the backwall for any spalling or crushing. Because overlays on the backwall have not performed well, the current Bureau philosophy is to replace some or all of the backwall. The designer will need to develop details; no standard is available.
(c) If the backwall condition is uncertain, recommend repair. Examine cracks carefully to be certain they are not just shrinkage cracks. Document fully any possible repair areas with photos and sketches with dimensions.
(d) Consider replacing only the bad sections rather than the entire backwall. Weigh the decision against bearing settings, expansion device openings, and other related factors.
(e) Measure and record the distance from the centerline of each beam bearing to the face of the backwall.

(6) Bridge bearings and seats

(a) Note condition of the bearings. If settlement or impact is causing damage to the end of the superstructure or bearing seats, consider replacing the bearings and additional necessary repairs.
(b) Plan to reset bearings only if the existing setting is critical. However, often the bearings are reset if the entire backwall is replaced.
(c) If the bridge seat is spalled in the bearing area, sound the area well with a hammer, and sketch the proposed repair area with dimensions.
(d) Note condition and effectiveness of intermediate bearings under abutment floor beams on two girder bridges. If bearings appear to be non-functioning, consider replacement with laminated pads.

(7) Drains and scuppers
(a) Drains should have been extended by maintenance crews. Discuss any missing extensions with the supervising Unit Leader because it may be advisable to have the extensions added by maintenance crews rather than the repair contractor.
(b) Do not plan to extend the drains on a slab bridge because there are no beams to be deteriorated by deicer runoff. Drains on a slab bridge should extend slightly below the bottom of deck level to minimize slab underside deterioration.
(c) Curb scuppers at the ends of the bridge may need to be plugged or reconstructed. Consider the effects of drainage across a deck joint and on spread if proposing to plug scuppers, and consider the locations of drain tubes if proposing to reconstruct scuppers.

(8) Railing
(a) Measure and record the heights of the curbs and rails. The dimensions are very helpful for determining whether there is an overlay already on the deck and for planning retrofit cast-in-place (CIP) barrier height. Determine if the bridge is on the NHS system using SIIMS (NBI item 104 = 1). NHS status will determine required rail heights [BDM 12.1.9.2.2.1].
(b) As part of an overlay project, the railing will be updated to current safety standards [BDM 12.1.9.2.2]. A CIP barrier rail will be added, if one is not already in place. Before the field exam, check the full depth inspection report and BRIS, to determine if a CIP barrier rail has been added during a previous project. Existing metal railing, whether steel or aluminum, is removed and becomes the property of the contractor in almost all cases, even if the rail does not interfere with the CIP barrier rail. Exceptions to metal rail removal or to rail becoming the contractor's property should be confirmed with the District.
(c) If the curb is narrow, measure it to determine if the standard 10-inch wide CIP retrofit barrier rail [BSB SS 1031] will need to be modified to fit.
(d) Examine curbs at the construction joint between top of deck and bottom of curb. Curbs are typically tied to the deck with reinforcing hoops. The vertical legs of the hoops experience section loss and failure from exposure to de-icing chemicals in the construction joint. This is not always apparent from the front face of the curb. The exterior edge of deck/fascia should also be examined for signs of deterioration and corrosion stains. If extensive section loss/failure of reinforcing is present on most of the curb hoops, consideration should be given to replacing the curbs/rail/deck overhang. In some cases, depending on the shoulder width available, it may be feasible to install a 6-inch thick concrete fascia with dowels and reinforcing to strengthen the curb and rail. Depending on field exam findings, a recommendation may be warranted for the Bridge Preservation Engineer in coordination with the District to do a follow up investigation involving limited concrete fascia curb removal at various locations in order to determine the condition of the reinforcement and subsequently the most appropriate repair option.
(e) Examine the condition of the existing rail and note areas that require repair.
(f) On interstate and primary highway systems for deck replacement, superstructure replacement, and widening projects there are additional railing considerations [BDM 12.1.9.2.2]. Plan to take field measurements accordingly. Note however that railing retrofit projects shall continue to use the standard retrofit rails, which are 2 ft -10 in tall.

(g) The Design Bureau will plan the guardrail arrangement. On short bridges the Design Bureau may run the guardrail across the length of the bridge and attach it to the CIP barrier rail or to the existing concrete rail.

(9) Paint

(a) In general, painting of the bridge is avoided in the repair plans. There are environmental concerns due to use of lead-based paints in the past, and the new painting specifications require careful attention to surface preparation, disposal, and paint system. However, painting is included in some areas such as raise plates for a sliding plate joint, heat-straightened beams, and strengthened beams.

(10) Beams

(a) Observe in general for corrosion, cracks, impact areas, damage, or sag. Take special note of prestressed concrete beam ends and deterioration at bridge deck joints. Document any significant observations with sketches and photographs.

(11) Substructure

(a) Examine the substructure for repair needs, especially below-deck joints and areas identified in the full depth inspection report. Sound any potential areas of repair with a hammer. Document the areas with sketches and photographs. Consult with the supervising Unit Leader regarding which areas to repair and which method to use for the repairs.

(b) Examine abutments for erosion and scour damage. Determine if abutment footings are undermined. If footings are undermined, determine how many and what type of piles are exposed.

(12) Traffic

(a) Note any situation that would affect traffic controls during repair, such as field entrances, intersections, medians, sidewalks, bicycle lanes, and shared use paths. Usually the Bridges and Structures Bureau will develop the TBR layout, but the repair designer will need to consult with the Design Bureau for special situations such as those noted above. Keep in mind that special approach signing will be required if a traffic lane is less than 14.5 feet. In special situations the Methods Unit of the Design Bureau will develop the layout.

(b) The designer shall notify the District and Traffic and Safety Bureau early in the design process when the repair project is on a roadway with high traffic volume and work directly with the Traffic and Safety Bureau in developing the traffic control plan, ensuring that the Design Bureau is informed.

(13) Guardrail

(a) Guardrail often is updated on bridge repair and overlay projects. The Design Bureau will decide whether to update the guardrail and will prepare any necessary plans.

Note overall condition of guardrail, type of bridge rail end section and type of end treatment. See Design Manual 8C-6 for further guidance. If guardrail is up-to-date and needs to be removed for other work items, the guardrail can be removed and reinstalled.

(14) Slope Protection

(a) Determine the type of slope protection present and condition. Note condition of joints in concrete panels. Note any signs of undermining under concrete panels.

(15) Rating

(a) Before a deck replacement, overlay or a retrofit cast-in-place (CIP) barrier rail is added, the designer shall check the bridge rating as outlined in the next article [BDM 12.1.7]. The current rating will be in the full depth inspection report

(16) General
- (a) Repair only what needs to be repaired. Review any questionable repair items with the supervising Unit Leader.
- (b) The designer should review examples of other, similar repair plans.
- (c) The designer shall use the applicable standard CADD notes [BDM 13].
- (d) Multiple field exams may be completed in a day. Organize notes and photos for each structure. Take sufficient photos of all areas of each bridge.

12.1.7 Rating

[AASHTO-I 3.23, 3.24]

Before planning improvements, the designer shall check the bridge rating according to the guidelines in this article, which generally are based on the AASHTO Standard and LRFD Specifications. Load Factor Rating (LFR) or Load and Resistance Factor Rating (LRFR) are acceptable rating methods if the method is not older than the method the controlling member was designed for. The Bureau does not intend to repair or rehabilitate a bridge and then require it to be posted for legal loads or embargoed for annual permit loads.

To determine if a bridge has adequate capacity for a cast-in-place barrier rail, deck overlay or deck replacement, follow the guidelines below. Be alert for unusual situations that may require a rating even if the guidelines indicate that no rating is required. Consult with the Bridge Rating Engineer if there are any questions.

(1) Does the project involve widening (*,**)?
- a. Yes: Check the bridge capacity with new dead load for legal and permit loads and, if acceptable, go to (4). If not acceptable, do not proceed.
- b. No: Go to (2).

(2) Is the operating rating at the design level (***) greater than 1.38 for LFR or 1.3 for LRFR and the new deck thickness not more than 1.5 inches thicker than the original deck thickness without overlay?
- a. Yes: Go to (4).
- b. No: Go to (3).

(3) Is the bridge capacity with new dead load acceptable for legal and permit loads?
- a. Yes: Go to (4).
- b. No: If not acceptable, do not proceed.

(4) Is the bridge on an interstate?
- a. Yes: Ratings for Emergency Vehicles (EVs) shall be evaluated if the inventory rating factor for the design load is less than 1.0 for the existing structure. If it is greater than 1.0, then no check is needed.
- b. No: No check is needed.

(*) The definition of widening means adding one or more beam lines to an existing bridge. The definition does not include increasing the bridge roadway width by 6” to 24” during a deck replacement project while keeping the number of beam lines the same.
(**) When widenings are performed on curved steel beam structures the consultant contract for final design shall include rating the final design.
(***) Operating rating at the design level means HS-20 or design lane for LFR or HL-93 for LRFR.

Rate beams, girders, and longitudinal slab strips at the operating level for Iowa legal loads, annual permit loads, and EVs as appropriate (but not for HS-20 or HL-93). For rating steel beams or girders, follow the guidelines in Table 12.1.7-1 for bridges without shear connectors and the guidelines in Table 12.1.7-2 for

bridges with shear connectors. Note that for bridges with shear connectors, deck reinforcing should be considered part of the cross section in negative moment regions. When doing deck replacements on steel beam bridges without shear connectors consider adding shear connectors to make the bridge composite as part of the project.

Table 12.1.7-1. Guidelines for rating steel beam bridges without shear connectors (noncomposite bridges) for an overlay or new concrete barrier rail

Beam Cross Section	Load Type	Load Distribution
Beam only	Beam weight	Directly to beam
	Deck weight	Based on simple span deck between each pair of beams and overhanging deck edge to exterior beam
Beam with strengthening angles(1)	Overlay weight	Equally to all beams
	Curb, existing rail, and new concrete barrier rail weights	For bridge widths not exceeding 44 feet, equally to all beams; for bridge widths greater than 44 feet, one-half to exterior beam, one-quarter to the first interior beam, and one-quarter to the second interior beam
	Legal live load and impact	According to AASHTO specifications

Table note:

(1) In the unusual cases where strengthening angles are added to steel beams, the angles are to be included in the beam cross section for all loads applied after the angles are installed.

Table 12.1.7-2. Guidelines for rating steel beam bridges with shear connectors (composite bridges) for an overlay or new concrete barrier rail

Beam Cross Section	Load Type	Load Distribution
Beam only	Beam weight	Directly to beam
	Deck weight	Based on simple span between each pair of beams and overhanging deck edge to exterior beam
	Curb weight, if curb is poured with deck	Directly to exterior beam
In positive moment regions, composite beam including deck(1); in negative moment regions, composite beam including longitudinal deck reinforcing	Curb weight, if curb is not poured with deck, and existing rail weight	For bridge widths not exceeding 44 feet, equally to all beams; for bridge widths greater than 44 feet, one-half to exterior beam, one-quarter to the first interior beam, and one-quarter to the second interior beam
	Overlay weight	Equally to all beams

Beam Cross Section	Load Type	Load Distribution
In positive moment regions, composite beam including strengthening angles(2) and deck(1); in negative moment regions, composite beam including strengthening angles(2) and longitudinal deck reinforcing	New concrete barrier rail weight	For bridge widths not exceeding 44 feet, equally to all beams; for bridge widths greater than 44 feet, one-half to exterior beam, one-quarter to the first interior beam, and one-quarter to the second interior beam
	Legal live load and impact	According to AASHTO Specifications

Table notes:

(1) The Bureau prefers not to include a concrete overlay in the composite cross section. If it appears that an overlay must be included for a successful rating, consult with the supervising Unit Leader and the Bridge Rating Engineer.

(2) In unusual cases where strengthening angles are added to steel beams, the angles are to be included in the beam cross section for all loads applied after the angles are installed.

The Bureau has strengthened steel beam or girder bridges by bolting on angles when bending stresses have approached or exceeded $0.65F_y$, and the method may be used with permission of the supervising Unit Leader. If strengthening angles are to be added, the designer shall proceed as follows. Specify that the angles are to be in place before an overlay and new concrete barrier rail are added to the side being strengthened. If possible, strengthen to $0.55F_y$ with Iowa legal loads. Deduct for bolt holes when checking beam stresses in tension regions. Require Charpy V-notch testing for the strengthening angles.

For rating concrete tee girders, generally follow the guidelines in Table 12.1.7-2 for composite bridges but adapt the guidelines for the tee girders. Check both bending and shear.

For rating concrete slab bridges, the designer shall follow the guidelines in Table 12.1.7-3 for a one-foot wide longitudinal strip. Check bending but not shear per AASHTO. Note that the rating distribution of the curb, rail, and concrete barrier rail weights is different than for design.

Table 12.1.7-3. Guidelines for rating slab bridges

Longitudinal Strip Cross Section	Load Type	Load Distribution
One-foot wide by thickness at 6.50 feet from gutterline, if slab thickness varies	Slab and overlay weights	Directly to longitudinal strip
	Curb, rail, and concrete barrier rail weights	Equally over the entire bridge width (total load times ratio of strip width to bridge width)
	Legal live load and impact	According to AASHTO Specifications

12.1.8 Staging and sequencing

12.1.8.1 Structural considerations

For most bridge repair projects it is assumed that construction can take place without cranes, construction vehicles, construction equipment, and concentrated quantities of construction materials on the bridge. However, the designer should consider potential construction loads when planning for repairs and review any critical situations with the supervising Unit Leader. If the contractor needs to place significant loads on the bridge, the contractor will be required to submit structural analysis by an Iowa-licensed engineer for approval as required in IDOT SS 1105.11, D and Chapter 11 of the Construction and Materials Bureau's Construction Manual. Thus, the bridge designer should be prepared to review construction loading after letting of the bridge contract.

Due to structural concerns, ready mix trucks are not allowed on the prepared portions of decks or slabs for overlay and re-overlay projects per BDM CADD Note E447.

If deck surface removal will seriously weaken a main reinforced concrete structural member such as a concrete slab, a concrete tee, or a concrete box, the designer shall consider the following options. In some situations, full road closure with an off-site detour may be needed.

- The preferred option is to sequence removal and repairs in narrow longitudinal strips to always maintain a functioning portion of a concrete box or tee girder flange. When the work sequence is critical, the designer shall include on the plans clear and specific notes regarding the sequence.
    - Concrete slab bridges which are more common typically have two main areas of concern that might require sequenced strip removal and repair. The first involves Class A slab repair in negative moment regions over piers where exposure of the top longitudinal tension rebar is possible. CADD Notes E410B and E410E are meant to address these concerns. The second involves Class B slab repair at the abutments. (Class B slab repair is not typical, but when it does occur it is typically at the abutments.)
- A second option is to provide support falsework during repairs. This option is less desirable since falsework behavior during repairs is complex and difficult to control. It is doubtful that original stresses in main bridge members can be duplicated or that design stresses will be achieved in the field.

Significant amounts of full-depth Class B repairs for beam bridges need to be carefully considered.

- Full depth deck removal over an exterior beam resulting in loss of beam support for the deck overhang of 6 feet or more may need to consider sequenced removal and repair. The capacity of the remaining intact bridge deck overhang to span longitudinally across the removal opening needs to be evaluated. When appropriate the capacity of the rail to span the removal opening may also be considered.
- Full depth deck removals adjacent to temporary barrier rail (TBR) for staged construction scenarios may need to consider tie-downs for the TBR due to drop-off. See BDM 12.1.8.3 for more information on drop-off requirements.
- Full depth deck removals adjacent to temporary barrier rail (TBR) for staged construction scenarios need to consider the capacity of the remaining intact deck adjacent to the removal area to carry the TBR and traffic loading. Sequenced removal and repair may be required with longitudinal strips as small as 2 feet wide. For ease of construction it may be desirable to end the full depth removal at the centerline of the beam, but this would result in poor shear connection where shear connectors are present and questionable strength for part of the composite compression flange.
- Plan details shall be specific about removal terminations and construction staging particularly when significant Class B repair is indicated. Under some conditions redistribution of beam stresses may also need to be considered.
- The designer should consider complete deck removal and replacement when significant Class B repair is expected.

12.1.8.2 Construction considerations

For bridge roadway widths to a maximum of 44 feet when standard traffic control layouts apply, no construction joints need to be shown on the overlay plans. The construction joint for these standard situations is at the centerline of the approach roadway.

Standard temporary barrier rail (TBR) layouts will need to include a minimum traffic lane width. If traffic lanes place traffic on the approach shoulder, the shoulder may need to be strengthened. TBR layouts developed by the bridge designer should be given to the Design Bureau as soon as possible to aid in road plan development. If the bridge has a sidewalk, bicycle lane, shared use path, or other special situations the designer will need to consult with the Design Bureau while developing the TBR layout.

Preferred minimum ~~T~~traffic lane width~~s~~ should be ~~at least 14.50~~15.50 feet wide to allow for 6 inches of clearance on each side of a 14.50 feet wide load. Restricted width signing is required when the available

width between two fixed obstacles is reduced to 15.50 feet or less. Restricted width signing is posted with a width of one foot less than the actual available width to give oversized vehicles at least six inches on each side to pass the obstacles. If it appears that traffic lanes must be narrower, consult with the supervising Unit Leader. Although concrete TBR is much-preferred, steel TBR may be required for narrow lanes.

The designer shall contact the Design Bureau whenever the first or both of the following narrow construction lane conditions apply:

- The roadway width between barriers during construction is equal to or less than ~~14.50~~15.50 feet. In this case the Design Bureau needs to provide details for signing in advance of the work area.
- The roadway width during construction is less than 10.50 feet on primary highways or 12.42 feet on interstate highways. In these cases the Traffic and Safety Bureau will need to review the TBR design.

Staging for high peak hourly traffic volume in one direction may require more than one lane open to traffic for that direction at certain times. Check with the Traffic and Safety Bureau for traffic routing through the project site, and keep the District informed of the proposed traffic routing. See BDM 12.1.11 for additional requirements.

For special traffic control layouts, overlay construction joint locations need to be determined and shown on the bridge plans. Construction joint locations should be established based on TBR dimensions, finishing machine dimensions and limitations [BDM C12.1.8.2], roadway width, and minimum number of required traffic lanes. The designer shall inform the Traffic and Safety Bureau of the bridge staging so that Bureau can develop the traffic control layout. The Traffic and Safety Bureau also will need to include on road plans a tabulation for control devices under the “Traffic Control” bid item.

12.1.8.3 Temporary barrier rail

[AASHTO-I 3.24.5.2]

Except for special circumstances such as urban applications, extremely narrow roadways, and low traffic counts [DB SRP TC-211], temporary barrier rail (TBR) shall be used for bridge deck repairs. Example TBR layouts for several standard bridge roadways are given in the commentary [BDM C12.1.8.3]. Bridge plans shall include a bid item for temporary barrier rail, and the contractor will be paid for the measured length of all setups as noted in the standard specifications [IDOT SS 2528.04, C, and 2528.05, C]. Traffic control layouts, either standard or special, will determine the number and extent of TBR sections. TBR should be flared at 6:1 in accordance with standard plan sheets [BSB SS 1049, 1050, 1056, and 1058].

Special traffic control layouts (such as for ramp bridges, flared roadways, high traffic volume roadways, and bridges with sidewalks, bicycle lanes, or shared use paths) may require the bridge designer to establish the construction staging before completion of the traffic control plan. In these cases the TBR layout will be specific for the project site, and the designer shall consult with the Design Bureau and Traffic and Safety Bureau.

Placing of the TBR during staged construction should be planned carefully with respect to the existing superstructure at each stage. Bureau policy is to place the TBR along the centerline of an existing beam wherever possible. If the TBR must be placed on a deck cantilever, the designer shall consult with the supervising Unit Leader and shall follow the guidelines below.

- Place the TBR on the deck cantilever, limiting the placement so that the traffic side of the barrier face is a maximum of one foot from the centerline of the stage exterior beam. Also, provide a minimum of 6-inches clearance from the outside edge of the TBR to the edge of the deck. The maximum temporary deck cantilever length should be approximately 3.50 feet.
- Check the transverse top slab reinforcement due to a distributed load from a collision on the TBR. The collision load may occur at the TBR joint where the anchorage is located. Use the effective length of slab for continuous concrete parapet found in the AASHTO Standard Specifications [AASHTO-I 3.24.5.2]. For allowable stress analysis of the reinforcing steel, use 75% of yield.

When performing the analysis, consider loss of slab concrete and corrosion of reinforcement. Because the situation is temporary, the designer may exercise some flexibility in the analysis.

Tie-downs are required for TBR near drop-offs. For severe drop-offs such as the edge of a bridge deck, tie-downs are required when the backside of the TBR to deck edge is less than 3.75 feet. With a Type B tie down strap the backside of the TBR may be as close as 6 inches to the edge of a bridge deck [DB DM 9B-9].

12.1.9 Programmed projects

12.1.9.1 Repair

12.1.9.1.1 Deck repairs

The bridge maintenance file will contain a sketch of the bridge deck, but the sketch will not show all areas that need repair. Because of traffic the bridge inspection crew may not sound all areas and may do so in a zigzag pattern. The deck inspection sketches may be used to estimate concept costs for Class A/B repairs but should not ordinarily be relied on for final plan preparation.

Unless the bridge deck has an existing hot mix asphalt (HMA) overlay or an existing PCC overlay, each deck repair project will include a sounding/survey plot that indicates areas of repair. Each sounding plot should include an estimate of the total quantity of delaminated (hollow), spalled, and patched areas. Deck sounding plots for first-time bridge deck overlay projects are typically performed using non-destructive evaluation (NDE) techniques. Currently automated acoustic sounding (AAS) is the NDE technique commonly used to produce sounding plots. The Bridge Preservation Engineer works with the Special Projects Engineer to schedule AAS for first-time bridge deck overlay projects two years prior to project letting. AAS plots include patched, spalled, and delaminated (hollow) areas on the deck as well as cracks in the top of the deck. AAS plots are placed in SIIMS and can be placed directly into plan sets. If an AAS plot is not available contact the Bridge Preservation Engineer to request the District to provide an audible/visual sounding plot. The District will conduct a site visit to prepare a plot based on visual inspection and deck sounding by manual chain drag and hammer. All hollow, spalled, and patched areas should be included in the District's deck survey plot. Deck survey plots for first-time bridge deck overlay projects shall be included in plan sets but shall only include delaminated areas designated as Class A deck repair areas and, when required, Class B deck repair areas. Manual deck sounding for re-overlay projects are performed after letting once the existing overlay has been removed.

When an AAS plot is available, the designer should increase the repair area, based on delaminated area in the plot, by 25% and include it as the basic quantity of Class A bridge deck repair [BDM 13.5.2, E400A or E400C]. The 25% increase assumes needed repair areas are somewhat larger than shown in the plot and consider "squaring" of the repair area removals. For the repair plans, the designer shall add the following to the plot: centerline of piers, centerline of roadway, north arrow, and date of completion.

When the District submits an audible/visual survey, the designer should increase the estimated repair area by 25% and include it as the basic quantity of Class A bridge deck repair [BDM 13.5.2, E400A or E400C]. The 25% increase assumes needed repair areas are somewhat larger than shown in the plot and consider "squaring" of the repair area removals. For the repair plans, the designer shall include the following to the plot: centerline of piers, centerline of roadway, north arrow, and date of completion.

When soundings indicate repair areas exceeding 50% (1.25*37.5%) of the total deck area, consult the supervising Unit Leader to determine if the entire deck should have Class A bridge deck repair or if the deck should be replaced.

Sounding plots shall not be given on the repair plans for bridges with an existing PCC overlay [BDM 13.5.2, E400B]. Instead, show existence and thickness of PCC overlays on the plans, and provide a bid quantity item for removal of the PCC overlay. If the District does provide soundings through an existing

PCC overlay, it is Bureau policy to disregard the soundings because they typically are unreliable. Estimate Class A bridge deck repair as 20% of deck area for bridges with existing PCC overlays.

If an existing PCC overlay thickness is reasonably determined to be 3/4” thicker (or more) than indicated in existing plan sets discuss with supervising Unit Leader on the need to modify BDM CADD Note E412 and plan details to address milling of the existing overlay and depth of the new re-overlay. In general, it is desirable and required to remove all the existing overlay and to extend a 1/4” into the original deck to ensure the new overlay is adequately bonded. Any exceptions to the requirements in the previous statement must be approved by the Chief Structural Engineer. Modifying plan notes and details may be needed to ensure the contractor accounts for any additional costs in their bid when existing and new overlay thicknesses are 3/4” or greater than what is typical. In general, it is not desirable to reduce the new overlay thickness and thereby alter the final riding surface from the existing riding surface to save on overlay material and cost since it may affect rideability on the bridge deck and approaches, deck drainage, and bridge expansion joints. An exception may apply if the bridge rating did not account for the increased thickness and is adversely affected by it.

Many bridge decks with existing PCC overlays will have had epoxy injection. Removing exposed epoxy prior to applying the new overlay is necessary to achieve a good bond. The amount of epoxy in a deck and the level of effort to remove exposed epoxy can vary. Include CADD Note E400 for projects that have an existing PCC overlay to ensure any exposed epoxy is removed.

Sounding plots shall not be given on the repair plans for bridges with an existing HMA overlay [BDM 13.5.2, E400B]. Instead, show existence and thickness of HMA on the plans, and provide a bid quantity item for removal of the HMA. If the District does provide soundings through an existing HMA overlay, it is Bureau policy to disregard the soundings because they typically are unreliable. Estimate Class A repair as 50% of deck area for HMA-covered bridges, except as noted below for short simple spans. In all cases, consult the supervising Unit Leader for the percentage to use.

HMA-covered decks of short simple spans to approximately 50 feet should be considered for Class A repair over the entire floor. Age of asphalt cover and age of bridge should enter into this decision. In general, decks covered by asphalt for 15 years or more should receive complete Class A repair.

Because of structural concerns the designer should give continuous concrete slabs, concrete box girders, and concrete tee girders a careful appraisal for Class A and B repair. See BDM 12.1.8.1 for additional discussion. If the deck is asphalt covered, cores or excavation of the HMA may be necessary to determine condition of the concrete in the negative moment regions.

Some older concrete slab bridges do not have a top reinforcing mat in the positive moment region. For those areas without a top mat, require Class A repair with a minimum of 1½ inches removal.

The designer is responsible for identification of full-depth, Class B repair areas. The designer should not include a token amount of Class B repair if none is anticipated because the standard specifications provide for a contingency amount of Class B repair up to 5 square yards [IDOT SS 2413.05].

The upper boundary for Class A or Class B repair is defined as the lower boundary for overlay [IDOT SS 2413.01 and BSB SS 1038]. For situations where there will be no overlay, the Class A or Class B repair will extend to the original deck surface. This exception must be noted in the design plans. The plans also should note that the finishing and curing is as required for an overlay.

IDOT SS 2413 requires contractors to clean epoxy coated reinforcing with hand tools to prevent damage to the coating. The IDOT Standard Specifications do not currently address repairs to exposed epoxy coated reinforcement which is damaged or deteriorated in deck repair situations. BSB has determined that, in most cases, epoxy coating need not be repaired since any repairs to the coating are likely to be difficult and relatively ineffective. Unless determined otherwise, plans involving deck repair may remain silent with respect to damaged epoxy-coating.

12.1.9.1.2 Overlays

The usual preparation for a deck overlay is to remove deck concrete to ¼ inch below the original surface [IDOT SS 2413.01, C, and BSB SS 1038]. Where the overlay preparation will be greater than that amount, the designer shall identify the locations on the design plans and redefine the classification between overlay and repair by means of plan notes.

Due to structural concerns, ready mix trucks are not allowed on the prepared portions of decks or slabs for overlay and re-overlay projects per BDM CADD Note E447.

Currently, hydrodemolition [per IDOT SS 2413.03, C.2.b] will only be permitted on an overlay project when requested by the District or Chief Structural Engineer. Hydrodemolition may be permitted when Class A repair is minimal since the probability of breaching the deck is reduced. Hydrodemolition shall not be used for CCS bridges since the top longitudinal bars in negative moment regions over the piers are susceptible to exposure which could adversely affect the structural integrity of the bridge. DS-15094 "Partial Removal of Existing Bridge Deck Using Hydrodemolition" shall be specified when hydrodemolition is used. [BSB SS 1069, which at one time contained the appropriate hydrodemolition notes to include in the plan set, has been voided and is replaced by DS-15094.]

For an overlay, the deck surface raise shall be 1½ inches. This amount of raise is intended to provide at least 1 3/4 inches of thickness for the overlay. Where the end of the overlay is not armored, the designer shall provide Class A repair for a distance of 2 feet from the end of the overlay [BSB SS 1040].

There are some cases where the roadway crown or the longitudinal profile could be altered by varying the thickness of the overlay. Unless the crown or profile is intolerable, it is best to detail a constant surface raise over the entire deck area.

If possible, the surface raise should be carried uniformly from end to end of the bridge. Because it usually is not cost effective to add raise plates to finger joints the designer should consider tapering the overlay to meet these joints. In most instances an overlay taper will be the best solution at a finger joint.

Where a taper is necessary, set the taper at 1½ inches to 40 feet, subject to approval of the Design Bureau, and core out the deck for a minimum thickness of 1½ inches. On the plans the taper area should be indicated by redefining the lower boundary of the overlay as the lower boundary of preparation for taper.

The standard specifications allow either Class O concrete [CMB IM 529] or Class HPC-O concrete for bridge deck overlays [IDOT SS 2413.02, D]. Latex modified concrete no longer is allowed.

For a few years prior to FY 2024 specific deck overlay projects were selected to use polypropylene fibers in the Class HPC-O concrete mix to help reduce early age cracking. Beginning in FY 2024 all Class HPC-O concrete for bridge deck overlays included polypropylene fibers. Polypropylene fiber shall be specified as follows:

- Reference Developmental Specifications for Fiber Reinforcement for Structural Concrete [DS-23076] on the plans.
- Include 2413-1000005 bid item quantity in SY for Fiber Reinforcement for Concrete Repair/Overlay.
- Include 2403-1000010 bid item quantity as LS for Trial Batch and Test Placement (Fiber Reinforced Concrete).

12.1.9.1.3 Deck joints

Whether a joint is replaced, repaired, or left in place should be based on both the condition of the joint and the condition of the bridge seat. The designer shall follow the guidelines below.

(1) If there is salt damage to the bridge seat, design a new waterproof joint even if the existing joint is sound.
(2) If there is no salt damage to the bridge seat, retain the existing joint if it is sound.

(3) If the project includes backwall or joint repair, replace or modify the joint to prevent leakage.
(4) If existing sliding plates are retained, clean the existing plates, paint with rust inhibitor type primer and final coat, and add raise plates. See the cleaned painted raise plate note [BDM 13.5.2, E470 (M470)].
(5) Unarmored concrete slab ends may be raised and left unarmored, but the end of the overlay shall have a Class A repair for a distance of 2 feet [BDM 12.1.9.1.2, BSB SS 1040].
(6) Unarmored compression seals may be used at joints that have little or no movement. The maximum width for unarmored compression seals shall be 1 5/8 inches because slab edges ravel badly at wider joint openings.
(7) Use a strip seal for modification or replacement of joints with movement. List on the plans the total design movement in inches for the strip seal.
(8) Galvanize joint armor and steel extrusions, including extrusions to be welded to existing sliding plates.
(9) If possible, taper an overlay to finger joints to avoid requiring raise plates. Review the design with the supervising Unit Leader.
(10) If an existing finger joint has no drainage trough, consider adding the trough.

12.1.9.1.4 Drains and scuppers

Due to past maintenance programs, all drain tubes now should be extended below the exterior beams. If drain tubes are not extended, it is Bureau policy not to extend them as part of a bridge repair or overlay project. Exceptions to this policy may include cases where drainage from existing drain tubes are leading to localized beam deterioration. If drain tubes are extended the extension attachments should not be made with bolts that pass through the drain openings since the obstructions may lead to clogging from debris.

Curb scuppers, which are 5- to 6-foot long curb openings at the bridge ends, should be plugged or reconstructed. If the designer chooses to plug scuppers, the designer will need to consider the effect of drainage across a deck joint. If the designer chooses to reconstruct scuppers, the designer will need to remodel each scupper to accommodate a drain tube.

The effect of plugging scuppers or drains on the width of spread should be considered with respect to the guidelines in BDM 5.8.4. Minimal increases in spread width due to plugging/removing scuppers or drains may be acceptable.

12.1.9.1.5 Curbs

Repairs to the top and batter face of curbs shall meet the requirements for structural concrete repair [IDOT SS 2426]. The repairs require a bid item for concrete repair, and the standard sheet for concrete repairs [BSB SS 1045] shall be included in the design plans.

In the field there has been difficulty with the combination of curb reconstruction and Class B deck repair. If Class B deck repair is adjacent to curbs, the designer must consider the problem of curb removal and curb support. Notes on the plans regarding construction sequence and procedures need to be very clear. See BDM 12.1.8.1 for additional discussion.

When curbs are to be reconstructed for their entire cross section, they shall be constructed with Class D concrete before the overlay placement is started. The designer should include bid item “Structural Concrete” and note on the plans that the concrete shall be Class D. The designer also should note on the plans that the deck repair quantity will not include the plan area under the curbs.

12.1.9.1.6 Miscellaneous concrete

Miscellaneous concrete repairs shall be in accordance with the standard sheet for concrete repairs [BSB SS 1045] and the standard specifications for structural concrete repair [IDOT SS 2426].

12.1.9.1.7 Backwalls and diaphragms

Class C structural concrete shall be used for reconstruction of diaphragms and backwalls. New concrete should be placed to the final riding surface as shown in Figure 12.1.9.1.7 and finished [BDM 13.5.2, E461]. Plans should provide specific details showing the limits of Class C concrete. Depending on the depth of the reconstruction, the limits may be given in one of two ways.

(1) If the reconstruction involves a large concrete quantity and reinforcing steel, the backwall detail can note an upper limit for Class C concrete, which then is included as a bid item.
(2) If the reconstruction involves little concrete below the bottom of the deck and no reinforcing steel, the repair can be included as “Deck Repair Class B” area. The designer shall note on the plans that the cost of all removal and all concrete replacement below the bottom of the deck is to be included in the price bid for “Deck Repair Class B”.

When replacing backwalls full height, the designer should incorporate existing rebar into new work only for tie purposes. Existing bars should be exposed and cut off to the specified development length. The existing rebar should not be considered for strength in the new work. New bars should be doweled into the existing concrete to satisfy strength requirements.

When doing repair projects that involve replacing the backwall and modifying the expansion device, the designer shall indicate on the plans that the vertical face of the existing expansion joint be cleaned and painted as indicated in Figure 12.1.9.1.7. Cleaning and painting should be similar to that specified for raise plates on sliding plate expansion devices [BDM 12.1.9.1.3].

The tops of the new diaphragms and backwalls shall not be sealed with concrete sealer.

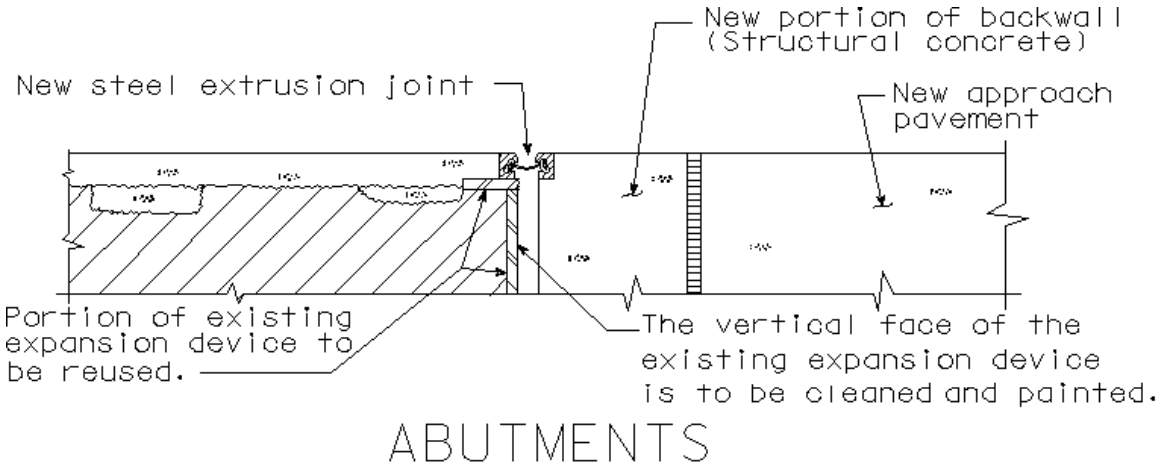

Figure 12.1.9.1.7. Backwall replacement with remodeled expansion joint

If backwalls are not reconstructed, as a minimum the designer shall rebuild the wall to the top of the paving notch.

12.1.9.1.8 Shotcrete

Currently the Bureau does not use shotcrete for bridge repairs. Any exceptions shall be approved by the Chief Structural Engineer.

12.1.9.1.9 Asbestos

~~In unusual cases~~ Prior to plan turn-in, the asbestos inspection by the Location and Environment Bureau will determine the presence of asbestos material~~that asbestos materials are present~~ in a bridge to be repaired. In most cases, the Iowa DOT will require the contractor to remove the asbestos during the project if present. In unusual cases, the~~The usual~~ procedure can be~~is~~ to remove the asbestos materials in

advance of repair with a separate contract so that the repair project can proceed without delay. If this is the case, the~~The~~ designer should note on the plans that the asbestos removal will be accomplished before the repair contract is issued.

If asbestos materials cannot be removed in advance of a repair project the designer shall be very specific on the plans to require ~~in~~ a general note in the form of CADD Note E485 that the asbestos materials need to be removed before any demolition or other repair activities commence. The designer also shall include in the plans a bid item for removal of asbestos with a reference note listing the asbestos material, amount to be removed, and Standard Specifications reference for asbestos removal [IDOT SS 2536]. The designer shall also provide the asbestos test report in the project E-files which will help the contractor find the location of the asbestos.

12.1.9.2 Retrofit

12.1.9.2.1 Doweled bars

To meet the TL-4 retrofit barrier rail design, dowels intended to attach the rail shall be placed in 10-inch deep holes [BSB SS 1031-1031F]. Dowels intended to attach other structural components may be placed in deep or shallow holes depending on design conditions. For a deep hole (The hole is deep enough to fully develop the dowel.) the designer shall follow the guidelines below for choosing the dowel-setting material.

- Polymer grout: All dowels may use an approved polymer grout system [IDOT SS 2301.03, E, CMB IM 491.11]. Different polymer grouts are approved for vertical or horizontal installation. Holes are to be 1/8 inch larger in diameter than the nominal size of the dowels.
- Hydraulic cement grout: Only those dowels that are set vertical or with a slope not less than 1:1 may use the hydraulic cement grout system. Holes drilled for the dowels are to be 2 1/2 times the dowel diameter and are to be blown clean with compressed air immediately prior to placing grout. The hydraulic cement grout system shall be approved in advance [CMB IM 491.13].

If the hole for setting a dowel is shallow, 4 to 6 inches deep, the designer shall use only an approved polymer grout system. When the dowel is subjected to intermittent tension, the designer shall limit tension to the allowable value given in Table 12.1.9.2.1, which is based on a factor of safety of four applied to average pullout value. The minimum factor of safety based on 7-day pullout test criteria [CMB IM 491.11] will be less than four but greater than two. Dowels with an approved polymer grout system shall not be subjected to permanent tension.

Table 12.1.9.2.1. Allowable intermittent tension values for short #6 rebar dowels set in epoxy in 7/8-inch diameter holes

Embedment, Inches	Allowable Intermittent Tension Load, kips	
	#6 black dowel	#6 epoxy dowel
4	3.775	2.828
6	5.000	3.744

To ensure full capacity all dowels shall be placed a minimum of 4 inches from center of dowel to edge of concrete.

12.1.9.2.2 TL-4 barrier rails

Bureau policy is to upgrade existing barrier rails on bridges in the vicinity of road construction projects. The standard Iowa retrofit barrier rail [BSB SS 1031-1031T] carries a Test Level-4 (TL-4) rating [BDM 12.1.5]. If a bridge has no concrete barrier rails or outdated barrier rails, the bridge should be retrofitted with current barrier rails as part of a repair, overlay, or paving project.

With a rating of TL-4 the standard retrofit barrier rail is adequate for retrofit rail projects on the interstate or primary highway systems. However, for deck replacement, superstructure replacement, or widening

projects on those systems the designer shall consider the need for taller rails with a TL-5 rating. More information is given in the railings article [BDM 5.8.1.2.1]. Questions should be referred to the Chief Structural Engineer.

A retrofit barrier rail consists of both a standard section and two end sections. The standard section is of constant cross section, and the end sections include turnouts with connections to thrie beam guardrail. Because the new thrie beam connection requires a significant amount of reinforcement, which is inconsistent with reasonable dowel placement, the modified end section will require use of the Design Bureau's connection to existing endposts [DB SRP BA-202].

Both the standard rail section and the end sections usually are replaced in the same project but, in some cases when the standard section is adequate, only the end sections are replaced. The decision is based on the adequacy of both standard and end sections and the need to provide for connection to guardrail. Standard sheets provide details for retrofit rails for several usual conditions [BSB SS 1031-1031T].

When a bridge repair includes an overlay or updated end rail section, there may be need to apply sealer to the traffic faces and tops of existing rails. If the barrier has severe deterioration, consider whether repairs need to be made first before sealing, or if the sealing is worth the cost. Do not seal rails unless other repairs require traffic control for both sides of the bridge. If existing rails are to be sealed use CADD Note E463/M463 [BDM 13.5.2].

New concrete barrier rails shall not be sealed. The sealant may prevent proper curing of the concrete.

12.1.9.2.2.1 Standard section

[AASHTO-I 2.7.1.3]

Except for the unusual case where TL-5 rails are required, if no concrete barrier rails or retrofit barrier rails are present, new 34-inch height, TL-4 retrofit barrier rails shall be added to the bridge. The designer shall check capacity of exterior beams to carry the new barrier rails.

For a bridge on a National Highway System (NHS) route [BDM 1.3], existing concrete barrier rails or retrofit barrier rails are adequate if they have a final height after overlay, if overlay is part of the project, of at least 29 inches above the riding surface at the gutter line. On other routes they are adequate if they have a final height after overlay, if overlay is part of the project, of at least 27 inches above the riding surface at the gutter line. When the existing concrete barrier rails or existing retrofit barrier rails do not meet the applicable requirement, they shall be increased to a height of 34 inches.

Thickness of retrofit barrier rails shall be 10 inches [BSB SS 1031, 1031C, 1031E] if the bridge does not have electrical conduit installed in the existing curb and will not have conduit in the retrofit rail. If the existing curb contains conduit or if conduit will be installed in the retrofit rail, the thickness shall be 14 inches [BSB SS 1031D, 1031F]. In cases where the curb contains conduit, the thicker rail is necessary to avoid penetrating the conduit with holes for dowel anchorage [BDM 13.5.2, E490]. In cases where conduit is installed in the retrofit rails no more than two conduits may be placed in one rail, and the maximum conduit sizes are two 2-inch or one 2-inch and one 3-inch.

Under the AASHTO Standard Specifications a barrier rail standard section shall be designed for a 10-kip force at the top edge [AASHTO-I 2.7.1.3].

If concrete retrofit barrier rail is being installed, any existing steel rail shall be removed. Unless otherwise requested by the District, the rail shall become the property of the contractor [BDM 13.5.2, E441A]. In most cases existing aluminum rail should be removed, but the District may request that it be left in place behind the new concrete barrier rail. When the aluminum rail is removed, the District may request that the rail remain the property of the state [BDM 13.5.2, E441B] or that it become the property of the contractor [BDM 13.5.2, E441A].

If a bridge has both an existing concrete barrier rail and a metal rail, the District shall make the decision to remove the metal rail or leave it in place.

When metal rails are to be removed, the designer shall include the following in “Retrofit Barrier Railing Notes.”

- A note "Existing bridge rail is not to be removed until authorized by the Engineer.”
- A scrape test note for a steel rail.
- A standard note describing the rail and disposition of the rail after removal [BDM 13.5.2, E441A, E441B].

12.1.9.2.2.2 End sections

[AASHTO-I 2.7.1.3]

In general, existing concrete end sections or retrofit end sections are judged to be adequate if they meet both of the following criteria:

- End sections will have a final height at least 32 inches above the riding surface at the gutter line after overlay, if overlay is part of the project.
- End sections include a turnout at least 24 inches long by 6 inches deep.

For each bridge the designer shall verify the adequacy of any existing end sections with the Design Bureau.

When existing end sections are judged to be adequate, thrie beam guardrail will be attached by drilling holes in the end sections. See the Design Bureau standard sheet [DB SRP BA-202] for details.

For a dual bridge it is not necessary to update the thrie beam connection for the trailing end because guardrail will not be used in a head-to-head staging operation.

When concrete end sections are judged to be inadequate, or end sections are not present, new end sections are required. End section height shall be 34 inches above the final riding surface at the gutter line to allow for a thrie-beam connection. The 34-inch height shall be maintained for a distance of 30 inches back from the turnout and then sloped down at 1:10 to the height of the standard section if it is less than 34 inches. If the 1:10 slope is difficult to achieve, see additional guidelines for sloped transitions in the commentary for this article [BDM C12.1.9.2.2.2].

If expansion joints exist at the end of the bridge deck, the end sections should be separated from the standard rail section at the expansion joints. If the gap between a detached end section and a standard end section exceeds 4 inches, a curb plate is required. A less-preferred option at expansion joints is to cantilever the end sections over the deck expansion joints.

At the joint with the standard section, end sections preferably should be the same thickness but may be thicker than the standard section.

Under the AASHTO Standard Specifications an end section shall be designed for a 10-kip force at the top edge [AASHTO-I 2.7.1.3]. If end sections cannot be attached to existing curbs and wing walls to resist the load, an acceptable option is to place supporting footings to a depth at least 48 inches below ground line.

No portion of an existing curb shall protrude from the turnout. When necessary, parts of existing curbs should be removed.

Guardrail information is to be furnished by the Design Bureau and included in the final plans.

12.1.9.2.3 Cover plates

When a project includes replacing the deck of a cover-plated steel I-beam bridge the designer shall discuss the cover plate repair options with the supervising Unit Leader. Two of the options that should be considered are peening of cover plate end welds and bolted cover plate end splices.

12.1.9.2.4 Other

Reserved

12.1.9.3 Strengthening steel members

12.1.9.3.1 Beams and girders

Structural steel repair material for main members shall meet Charpy V-Notch toughness requirements [IDOT SS 4152.02] and be so noted on the plans. Strengthening angles for a main member, although technically not considered main members themselves, will need to meet Charpy requirements because of the sizable stress range to which they are subjected.

On repair plans, where there is a small amount of miscellaneous structural steel, a note should specify whether Charpy V-Notch toughness is or is not required.

12.1.9.3.2 Other

Reserved

12.1.9.4 Replacements

12.1.9.4.1 Approach pavement

The designer shall inform the Design Bureau if there is a need to remove approach pavement to facilitate repair of a backwall or modify a paving notch. For replacing the approach pavement, the designer should request appropriate details from the Design Bureau. The designer should specify that the pavement joint between the bridge and approach slab be placed by the bridge contractor. For backwall removal down to paving notch level, remove 5’ of approach pavement. For semi-integral abutment conversions and full backwall replacement, remove the first 20’ full approach pavement panel.

In cases not involving backwall repair the Design Bureau in coordination with District personnel and the Bridges and Structures Bureau will make the decision to replace or not to replace approach pavement.

If approach pavement is to remain in place, the Design Bureau will provide details for pavement adjustments. The adjustments may be an HMA runout taper or a tapered PCC overlay.

12.1.9.4.2 Decks

Generally deck replacements that do not involve widening or other alterations to the superstructure configuration of a bridge do not require a situation plan (or TS&L) prepared by the Preliminary Bridge Design Unit. Therefore a Final Design Unit will be responsible for the typical bridge deck replacement project. Because deck replacements will require closing part or all of a bridge, the final designer should consider accelerated construction methods in order to minimize traffic disruption and work with the Design Bureau as needed to coordinate adjacent construction work.

For deck replacements with staged construction the designer needs to check the capacity of the existing bridge to handle staged traffic. Bridges with staged construction shall be able to carry all legal loads. Bridges with only two beams supporting staged traffic are of particular importance especially when the exterior beam is smaller than the interior beam. Rating of the existing bridge shall be based on the requirements in BDM 12.1.7.

Full and partial deck replacements should not typically include specific plan provisions for debris containment systems attached to the superstructure regardless of whether deck removal occurs over roadways, waterways, or railroads. Deck removal and debris handling techniques are generally considered to be part of the contractor’s means and methods. The contractor shall be required to submit a demolition plan for review. In cases of removal over railroads, review and approval by the railroad will also be required. Include CADD Note E417 in the plan set for deck removals over railroads.

To properly specify deck elevations on the plans for a deck replacement, the final designer shall request a survey of the existing deck. A bridge occasionally will settle several inches during years of service and, without the survey, elevations for the new deck will not be accurate for the intended deck thickness. Per BDM 1.8.2.1, a Construction Survey, Location Survey bid item shall also be included in the project plans for deck replacements projects with or without widening.

In relatively old bridges, steel beams or girders may not be composite with the deck. In those cases the designer should consider adding shear studs to make the superstructure composite.

Before shear studs were commonly available, angle-plus-bar shear lugs were in use in Iowa from about 1947 to 1970 to provide composite action between steel beams and concrete decks. Because the AASHTO Standard or LRFD Specifications do not give a method for determining nominal resistance of the lugs, the commentary for this article [BDM C12.1.9.4.2] has a method that was checked with laboratory tests. The designer shall check composite shear capacity of the existing lugs and provide additional shear studs on the project plans as needed.

The designer also shall provide for a field inspection of top flanges and shear lugs after deck removal. Any cracks, gouges, nicks, and cuts in tension flanges and in shear lugs above tension flanges need to be ground out or otherwise repaired. After all damage has been assessed and repaired the contractor shall be required to provide additional shear studs to compensate for the shear lug damage. The designer shall consult with the Chief Structural Engineer for any project involving shear lugs.

For a deck replacement project fatigue of a steel superstructure is an important consideration. Cover plated beams may have a relatively short remaining fatigue life, and the designer should consider retrofit options given in the cover plate article [BDM 12.1.9.2.3].

For deck replacements the designer also needs to address potential lateral buckling of steel beams in superstructures with integral abutments. During service conditions with the deck in place, closely spaced shear connectors prevent lateral buckling of the beams when they are in compression along with the deck and pushing against the abutments. However, when the deck is removed there is no compression resistance from it, and the lateral support for the beams is widely spaced at diaphragms only. If a temperature rise in the bare superstructure is large enough, the beams will not be able to push the abutments back into the approach fills, and the beams will buckle laterally between diaphragms.

12.1.9.4.3 Other

Reserved

12.1.9.5 Coatings

12.1.9.5.1 Scrape tests

Scrape tests are required whenever any steel is to be removed or repaired, including the following:

- Removal of an existing bridge with painted steel,
- Removal of existing painted steel handrail,
- Cleaning and painting of steel, such as raise plates and strengthening angles, and
- Painting of steel beams.

The designer should request scrape test results from the Location and Environment Bureau at the time design plans are being prepared. If results are not available at turn-in time, the designer shall notify the supervising Unit Leader.

Scrape test results shall be given on the plans in the format of a standard note [BDM 13.5.2, E480].

12.1.9.5.2 Cleaning and painting

Many bridge repair projects require small amounts of field painting. The designer needs to be very specific in identifying the areas to be painted and as needed, to include special details to clarify the extent of the painting. If the areas to be painted are not clearly identified, or if the plans suggest that additional areas need painting, a contractor will not be able to prepare a proper bid.

Table 12.1.9.5.2 lists examples of typical field painting and plan notes [BDM 13.5.2, 13.10.2] required for each example. Removal of non-hazardous paint [IDOT SS 2508.01, A], removal of hazardous paint [IDOT SS 2508.01, B], and painting of structural steel [IDOT SS 2508.02] shall be in accordance with the standard specifications.

Table 12.1.9.5.2. Typical field painting examples and plan notes

Field Painting Example	Scrape Test	Containment	Cleaning and Painting
New raise plate above existing expansion device	E480		E470
New strip seal device replacement for existing sliding plate expansion device	E480		E471
Existing masonry and sole plates	E480	E474	E473
New strengthening angles added to existing steel beams	E480	E474	E1000, E472C

For the examples in the table, bid items for “Painting Structural Steel” and “Containment” shall be included on the plans. For painting areas other than those in the table, the plan notes and bid items will be determined on a case-by-case basis with approval of the supervising Unit Leader.

If the existing paint system includes excessive amounts of leachable chromium or lead, the paint is considered to be hazardous. For projects with hazardous paint systems, additional precautions for removal and disposal of paint are required [IDOT SS 2508.01, B]. The Iowa DOT is obligated to obtain an EPA hazardous waste identification number, and the supervising Unit Leader shall contact the Location and Environment Bureau (LEB) to inform them of the need to obtain the number. If the bridge already has an EPA number, it may be placed on the plans based on consultation with LEB. If the bridge does not have an EPA number, the number cannot be placed on the plans because the contractor needs to generate waste before the number can be obtained.

12.1.9.5.3 Concrete sealer

As part of a repair or overlay project, the concrete barrier rails, curbs, and adjacent roadway surface shall be sealed [IDOT SS 2413.03, G]. The sealer should be applied continuously from the outside top edge of the rail to a line on the roadway surface one foot from the curb. Cost of the sealer should be made incidental to a bid item such as “Concrete Repair”, “Repair Beam Ends”, “Bridge Deck Overlay”, or “Structural Concrete”.

The bridge seats and wash areas under joints also should be sealed [IDOT SS 2403.03, P, 3]. If abutments or piers have extensive scale and/or map cracking, sealing to the ground line may be justified. If abutment backwalls and diaphragms are replaced, the tops are not to be sealed.

The designer shall specify any other areas of the bridge that are to be sealed.

12.1.9.5.4 Other

Reserved

12.1.10 Emergency projects

Quite regularly overpasses are struck and damaged by vehicles with overheight loads. Emergency repair projects for such damage must proceed on an accelerated schedule and close coordination with the

District. In general an emergency repair project will include an evaluation for traffic restriction, a field exam, a concept, and a final design.

After discovering the damage, the first problem facing the District is to determine if immediate traffic restriction is needed. There is no substitute for sound engineering judgment, but traffic restriction must be considered if any of the following conditions are observed:

- Open cracks or severe section loss in the lower flange or web of a damaged beam or girder,
- Severed prestressing strands or strands that are visibly deformed in a pretensioned prestressed concrete beam (PPCB),
- Significant misalignment (either horizontal or vertical) of the lower flange, or
- An open horizontal crack at the junction of the web and the top flange of a PPCB.

The District will consider safety when proposing traffic restrictions.

If the damage is severe, or possibly severe, the District should report the damage immediately by telephone to the Bridges and Structures Bureau. At the time of the call, the decision on traffic restriction should be confirmed. The telephone report of the incident must include at least the following information:

- Positive identification of the bridge, including the bridge number,
- Positive identification of the beams or girders that were damaged,
- A description of the damage with respect to the conditions listed above,
- Approximately when the bridge was damaged, and
- What traffic restriction, if any, has been installed.

If the damage is severe, shortly after the report the Bridges and Structures Bureau will arrange to inspect the bridge. The persons conducting the field exam will need to work with bridge or field maintenance to reserve a high lift and arrange traffic control.

In preparation for an inspection of an overheight collision, the repair designer should do the following.

- Review the bridge maintenance folder to determine:
  - If there has been a history of collisions on the bridge and whether there have been repairs due to collision damage,
  - If there is current damage that hasn't been repaired, and
  - The documented clearance at the site.
- Make copies of the plans to take to the site.
- Review with maintenance any information that is available on the collision and any traffic restrictions that are currently in place because of the collision.
- Reserve the digital camera.
- Check out hardhat, vest, tape measure, level, clipboard, flashlight, and ruler.
- Check out flashing emergency light for vehicle.

12.1.10.1 PPCB overpass repair

The following items are guidelines for the field exam of a PPCB bridge.

- Check for cracks or severe section loss in the lower flange or in the web of each damaged beam. Estimate loss of section.
- Check for severed prestressing strands or strands that are visibly deformed. Record number and location.
- Check for an open horizontal crack at the junction of the web and the top flange in each damaged beam.
- Determine any displacement between cracked sections.
- Determine if cracks extend completely through each cracked member by measuring along both interior and exterior surfaces.
- Inspect diaphragms.
- Inspect slab at beam-to-slab connections.

- Inspect beams adjacent to obviously damaged members to make sure all damage has been found.
- Note any existing collision damage from past accidents.
- Measure vertical clearance at point of impact.
- Sketch plan and elevation views of each damaged beam. Include dimensions.
- Take as many photos as possible, including dimension references such as rulers or extended tape measures. Key photo locations to sketches.
- Obtain a copy of the collision report from the Iowa State Patrol, if a report is available.
- Review traffic restrictions to make sure they are adequate.
- Recommend whether a diaper is needed to protect the public from loose concrete.

At the time of the field exam, usually it is possible to determine the necessity for continued traffic restriction.

Beams that are severely damaged often will continue to drop concrete onto the roadway below for several days. If there is any chance that chunks of loose concrete will drop, a canvas diaper should be draped around and below the damaged area. If possible, installation of this diaper should be delayed until after the field exam.

Options for a damaged beam include the following:

- Replace the beam,
- Repair damage and install a steel sleeve,
- Repair damage and place epoxy wrapping,
- Clean and coat exposed strands,
- Inject epoxy in cracks, or
- Do nothing.

If the severity of the beam damage is moderate, the Bureau prefers to make the decision to repair or replace the beam within a few days after the field exam. The decision can be difficult and can best be made back in the Bureau in consultation with the supervising Unit Leader and Bridge Project Development Engineer. Replacement of a PPCB costs about $45,000, and the cost will enter into the decision.

After the basic decisions regarding the repair are made, it is the designer's responsibility to write a concept for the repair project and prepare final plans as quickly as possible.

If the decision is made to replace a PPCB, the designer should detail deck removal at the face of the adjacent beam. During construction it is difficult to cut the deck between beams because the deck must be cut from both below and above. Any concrete diaphragms attached to the beam to be replaced also should be removed and replaced, which will not require the contractor to save any of the diaphragm reinforcing steel.

12.1.10.2 Steel beam or girder overpass repair

The following items are guidelines for the field exam of a rolled steel beam (RSB) or CWPG bridge.

- Note torn members and missing pieces of the superstructure.
- Using a level or string line, measure the horizontal and vertical displacement of each damaged beam or girder at the impact location and at any kinks or angular displacements at other locations.
- Measure rotations of damaged members.
- Measure gouges in damaged members for loss of section.
- If no cracks are visible but may be suspected, discuss the situation with the supervising Unit Leader, and consider requesting nondestructive testing (NDT) of the damaged areas.

- Inspect each damaged beam or girder at restrained locations such as the diaphragms. Check for cracks or broken welds where the diaphragm stiffener is connected, and check diaphragm connections at adjacent girders where impact may have been absorbed.
- Inspect adjacent beams or girders to make sure all damage has been found.
- Check for damage to the slab at beam or girder to slab connections.
- Check for buckling of diaphragms or other diaphragm damage.
- Check for weld or bolt damage at diaphragm connections.
- Note any existing collision damage from past accidents.
- Measure vertical clearance at point of impact.
- Sketch plan and elevation views of each damaged beam or girder. Include dimensions.
- Take as many photos as possible, including dimension references such as rulers or extended tape measures. Key photo locations to sketches.
- Obtain a copy of the collision report from the Iowa State Patrol, if a report is available.
- Review traffic restrictions to make sure they are adequate.

At the time of the field exam, usually it is possible to determine the necessity for continued traffic restriction.

Options for a damaged beam or girder include the following:

- Replace a section of the member,
- Heat-straighten the member,
- Grind out gouges and nicks,
- Repair damage, or
- Do nothing.

If the severity of the beam or girder damage is moderate, the Bureau prefers to make the decision to repair or replace the beam within a few days after the field exam. The decision shall be made back in the Bureau in consultation with the supervising Unit Leader and Bridge Project Development Engineer.

After the basic decisions regarding the repair are made, it is the designer's responsibility to write a concept for the repair project and prepare final plans as quickly as possible.

If the decision is made to replace a RSB or CWPG, the designer should detail deck removal at the face of the adjacent member. During construction it is difficult to cut the deck between members because the deck must be cut from both below and above.

12.1.10.3 Other

Reserved

12.1.11 Concept statements

Because bridge repair projects need to be tailored to a variety of existing conditions, repair projects cannot be developed in the same way as new or replacement projects. Administrative and funding procedures within the Iowa Department of Transportation are different for new and for repair projects. For programmed bridge repairs the Bridges and Structures Bureau is responsible for developing the project concept with the approval of the Design Bureau and the District.

In general, there are three types of repair projects: programmed bridge repairs, programmed deck overlays and deck replacements, and emergency repairs. Each type of repair requires a concept letter. Concept letter templates for each type of repair can be found on the W drive at W:\Highway\Bridge\Concepts\Concept Naming Convention & Templates\Concept Document Templates.

In 2017 the DOT began to emphasize the institutionalization of Transportation Systems Management and Operations (TSMO). One TSMO service layer that directly affects bridge repair concepts is work zone

management and the identification of Traffic Critical Projects (TCP). Concept letters shall identify which projects are designated TCP and which are not.

- TCP: In general, these projects are traffic critical because the work zone cannot be effectively mitigated below a critical level as carried out in the traffic critical checklist. The concept writer shall collaborate with the Work Zone Mitigation Team (from the Design Bureau, District, Traffic and Safety Bureau and Construction and Materials Bureau) to determine the traffic management strategy, and in rare cases develop a Transportation Management Plan (TMP). The concept writer shall clearly indicate in the concept that the project is traffic critical and which traffic management strategies will be implemented as developed by the team.
- Not TCP: Work with Design Bureau to obtain a simple statement and strategy on the traffic control methods and staging for the project to include in the concept. Clearly indicate in the concept that the project is not TCP. Projects may be TCP unless traffic mitigation strategies are implemented to make it not TCP. In these cases, the concept writer shall join forces with the Work Zone Mitigation Team to develop a traffic management strategy (or strategies) that mitigates the project work to a level below traffic critical following the design checklist. For these projects, the concept writer should specifically list the traffic management strategies that make the project not TCP.

The tools needed to determine if a project is TCP include TCP Checklist web-tool, Lane Closure Planning Tool Manual and the TSMO Work Zone Service Layer Management Plan. Typically holding a Work Zone Mitigation Team Meeting serves as the most efficient method for determination of TCP projects and the traffic management strategies to implement for the work.

In connection with TSMO, the term “narrow bridge” was coined around 2024 to address traffic management concerns for bridge repair projects on narrow interstates and high ADT primary divided routes. Narrow bridges are somewhat loosely defined as a pair of bridges on four lane interstate highways having roadway deck widths of 39 feet or less. When bridge roadway deck widths are this narrow it is difficult to maintain two lanes of traffic in each direction during staged construction activities. Additionally increasing traffic volumes on the interstate have led to the development of District Static Lane Closure Maps (https://iowadot.gov/workzonereferencelibrary) which can effectively eliminate some types of repair due to the limited work windows allowed under a single lane closure. In response to these issues a Traffic Evaluation Flowchart and Traffic Management Matrix were developed to help navigate the decision making process. These tools should be used when appropriate and can be found in commentary article BDM C12.1.11.

In addition to the above, the designer shall follow the procedures below for each repair type.

Programmed bridge repairs are initiated and programmed by the Bridges and Structures Bureau in cooperation with the District, but the repairs are described only in general terms. It is necessary for the Bureau to determine the repairs in detail.

- The assigned designer from the Bridges and Structures Bureau shall visit the project site, preferably with a representative from the District, to ascertain the details of the required repairs.
- The designer shall write a concept letter to the Assistant District Engineer listing the work to be accomplished and the estimated cost. The designer shall obtain a rough estimate of traffic control and roadway costs from the Design Bureau to include in the concept letter. See the example format for the letter in the commentary for this article.
- If the designer receives comments during the review period stated in the letter, at the end of the period the designer shall write a second letter to the Assistant District Engineer listing the revised work to be accomplished. The revised work will consist of the original concept plus or minus any items agreed upon during the review period. The second letter will constitute the approved concept and shall be used for plan development. If no comments are received, the first concept letter is considered final and shall be used for plan development.

Deck overlay and deck replacement projects also are initiated and programmed by the Bridges and Structures Bureau in cooperation with the District. These projects usually involve other items such as retrofit rails, joint work, and concrete repair. The designer should develop an individual concept letter for each bridge overlay project. The bulleted steps above for programmed repairs shall be followed.

Emergency repairs typically are necessary due to collision damage, such as when an overhead structure is struck by a vehicle with an overheight load. No funds are programmed for these emergency repairs, and contingency funding must be approved to accomplish any repairs. Aside from the funding, the repair project is developed in a similar way to a programmed project but at an accelerated pace. The Bridges and Structures Bureau inspects the damage when requested to do so and develops a concept letter reporting the damage, giving repair recommendations, and estimating costs. In general, the concept letter should have a format similar to the letter for programmed repairs in the commentary for this article. Discussions with the District at the concept stage are used to determine if the repairs will be done by Iowa Department of Transportation forces or by contract. Necessary funding usually is obtained with a staff action for contingency funds written by the Bridge Project Development Engineer.

For Consultant prepared concepts:

Prepare a summary of field exam observations for each bridge prior to meeting with Bridges and Structures Bureau staff to discuss. Submit notes one week prior to the meeting. Include the following in the field exam notes:

(1) Field exam date.
(2) Consultant and District attendees.
(3) Bridge maintenance number, FHWA number and location.
(4) Route carried and feature(s) crossed.
(5) NHS status.
(6) ADT and percentage of trucks.
(7) Year of construction.
(8) Previous work and year completed.
(9) Bridge type, skew, length, gutter to gutter width and location.
(10) Determine traffic control for overlay/re-overlay/re-deck. If staged construction is proposed, ensure lane width works.
(11) Summarize issues and recommended repairs.
(12) Include photos with labels.
(13) List original development cost.

Provide photos of key areas in an appendix to be included with the final concept.

12.1.12 Design documents

12.1.12.1 Drawings

The following outline covers the drawings required for a repair project. However, each project is unique and may require additional plans, details, and notes. The outline is only the first step in developing a set of repair plans.

(1) Situation Plan
The designer should show the following items on the situation plan.
(a) Centerline, highway number, lane direction of approach roadway
(b) Centerline, highway number of roadway lanes over passed; centerline of track and railroad over passed; general channel limits and name of stream over passed
(c) North arrow
(d) Location of dual structure. Indicate which of the dual structures is to be repaired.
(e) Roadway width and span lengths
(f) Bridge deck overlay limits
(g) Joint locations
(h) Notes keyed to area locations for repairs other than the deck
(i) Stationing, especially at abutment bearings. The Design Bureau will use this stationing in their traffic control layout.

(j) Approach formed beam guardrail
(k) Design history

(2) General Plan
Usually a general plan is not required because the traffic control plan provides sufficient information.

(3) Roadway Cross Section
For a deck overlay project the designer should show a reasonably complete cross section. Although the general notes state that old plans are available, the contractor seldom will use the old plans during construction. Stringer or girder web spacing and the existing slab thickness are especially important when unexpected Class B repair is found. If traffic control is different from the standard layouts, the designer may need to show construction staging.

The roadway cross section should show the following items.
(a) Roadway width, curb width, centerline of roadway
(b) Crown coordinates
(c) Stage joints. For staging construction for box or tee girders the designer shall avoid establishing a stage joint in the critical part of the effective flange. The designer should consider composite construction carefully when establishing joints.

(4) Deck Sounding Plot Sheet
In some cases additional hand-drawn information from the field will need to be added to the deck sounding plot

(5) Notes
See and subsequent articles in this manual [BDM 13.3, 13.5, and 13.10] for typical deck repair notes. In the manual, explanations with notes will provide additional information.

12.1.12.2 Specifications

Unless the project includes extensive structural repairs, no design specifications or design stresses need to be noted on the plans.

In most cases the Iowa DOT Standard Specifications are adequate for repair projects; however, if additional specifications are required, the designer shall list the applicable Supplemental Specifications, Developmental Specifications, and Special Provisions.

12.1.12.3 Notification of repairs

After the repair design is complete, the designer should notify the bridge maintenance and inspection group again with the specific repairs, design number, and schedule for contract letting. After the construction is completed, the repair plans will be included in the file for the bridge so that the plans are available to inspection teams and designers in the future.

12.2 Culvert repair

Reserved

C12 Bridge and culvert repair

C12.1.6 Field exams

2011 ~ Pedestrian and Bicyclist Access During Repair Projects

Unless a bridge can be closed during a repair project, vehicular access on the bridge must be maintained, but the bridge repair designer also needs to consider the needs of other users, including pedestrians and bicyclists on bridges with existing sidewalks, bicycle lanes, or shared use paths. For pedestrian and bicyclist access the designer cannot use the suggested temporary barrier rail layouts given in the Bridge and Culvert Repair section commentary [BDM C12.1.8.3] when developing a traffic control plan and should consult with the Design Bureau and, in complex situations, also with the Traffic and Safety Bureau. Along with pedestrian access the designer will need to address Americans with Disabilities Act (ADA) requirements. Although the Design Bureau intends to consider all users and ADA when developing traffic control plans for work zones [DB DM 9A-1 and 9A-5] the bridge repair designer needs to be aware of the issues and consult with the Design Bureau as soon as possible in special situations.

C12.1.8 Staging

C12.1.8.2 Construction considerations

1998 ~ Finishing machine dimensions for overlay and barrier rail

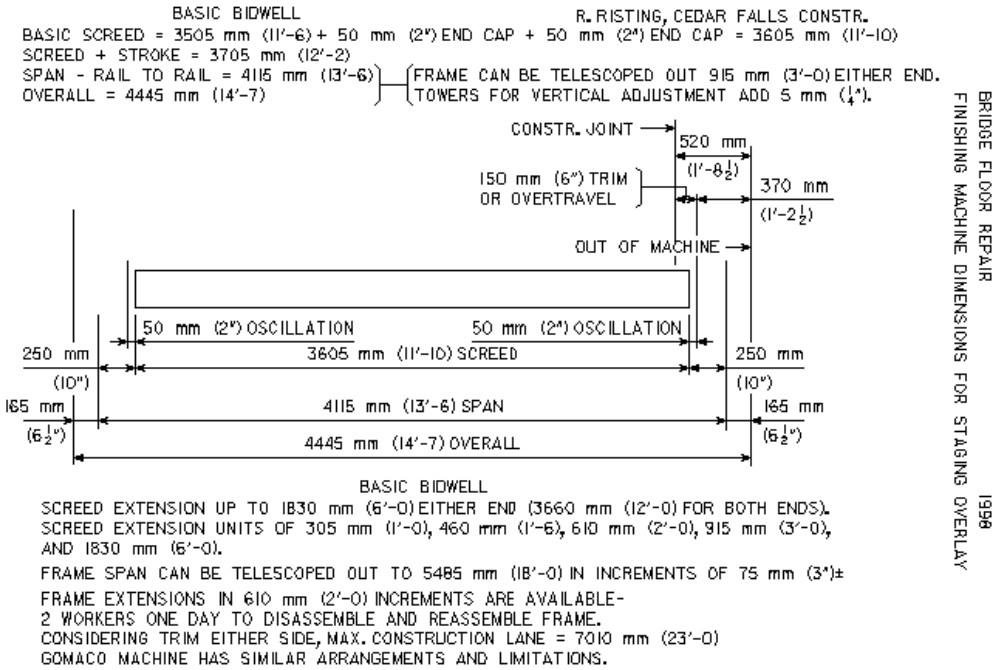

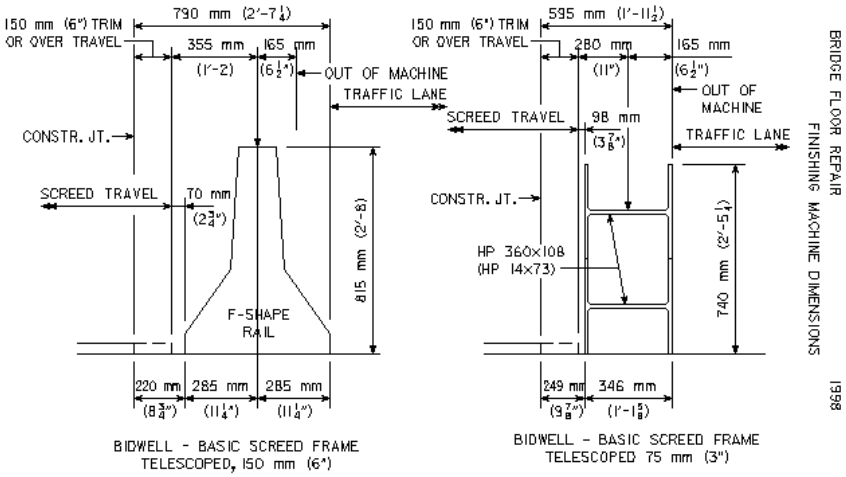

C12.1.8.3 Temporary barrier rail

2011 ~ Pedestrian and Bicyclist Access During Repair Projects

Unless a bridge can be closed during a repair project, vehicular access on the bridge must be maintained, but the bridge repair designer also needs to consider the needs of other users, including pedestrians and bicyclists on bridges with existing sidewalks, bicycle lanes, or shared use paths. For pedestrian and bicyclist access the designer cannot use the suggested temporary barrier rail layouts given in the Bridge and Culvert Repair section commentary [BDM C12.1.8.3] when developing a traffic control plan and should consult with the Design Bureau and, in complex situations, also with the Traffic and Safety Bureau. Along with pedestrian access the designer will need to address Americans with Disabilities Act (ADA) requirements. Although the Design Bureau intends to consider all users and ADA when developing traffic control plans for work zones [DB DM 9A-1 and 9A-5] the bridge repair designer needs to be aware of the issues and consult with the Design Bureau as soon as possible in special situations.

1998 ~ Example TBR layouts

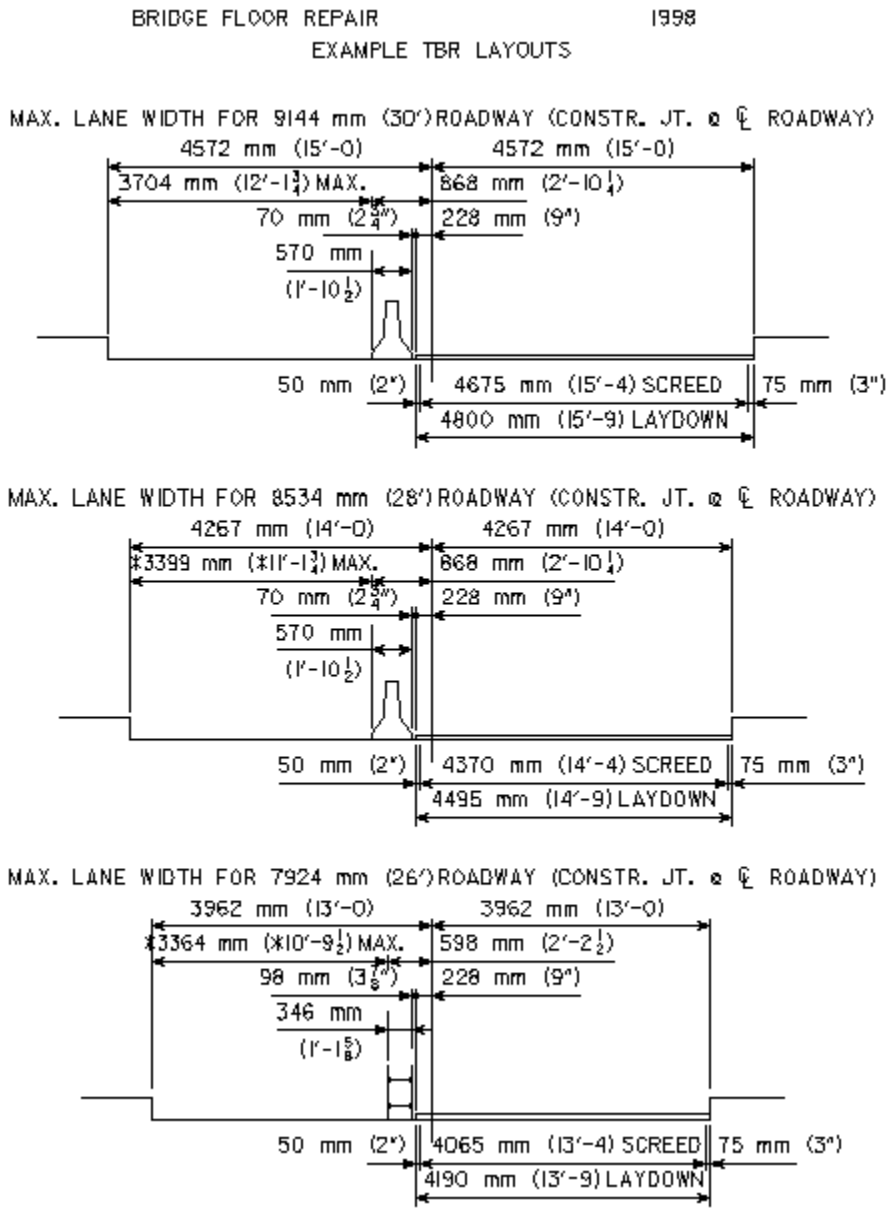

Figure note: All cases illustrated above require special signing because the roadway width is less than 14.50 feet between barriers. If the lane width is less than 10.50 feet the Traffic and Safety Bureau also will need to review the TBR design. See the manual text [BDM 12.1.8.3].

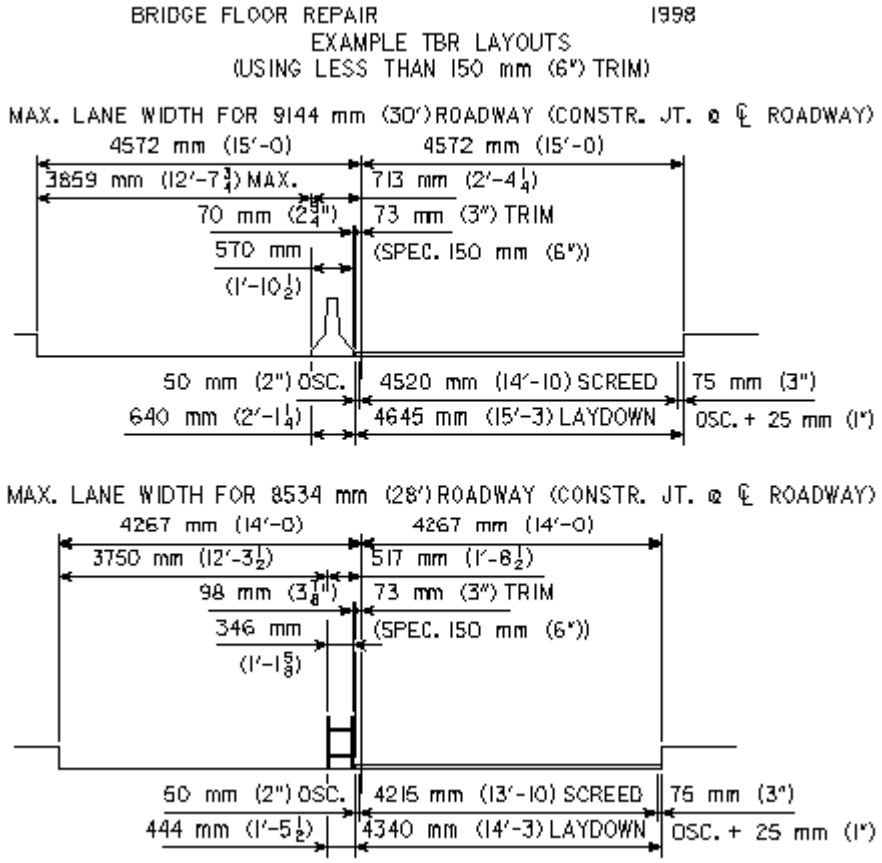

Figure notes: When less trim is used than required by the Standard Specifications, include deck repair note E432 [BDM 13.5.2]. Reduce trim only when needed to maximize roadway width.

All cases illustrated above require special signing because the roadway width is less than 14.50 feet between barriers. If the width is less than 10.50 feet the Traffic and Safety Bureau also will need to review the TBR design. See the manual text [BDM 12.8.1.3].

C12.1.9.2 Retrofit

C12.1.9.2.1 Doweled bars

Prior to 25 August 1993 ~ Iowa DOT Pullout Test Results

Plain and epoxy coated No.6 rebars were installed in 7/8" diameter holes in 4000 psi concrete at 4-inch and 6-inch depths, and pull-out loads were determined after a seven day epoxy cure. Results are as follows:

4-inch embedment depth

Bar type	Plain No. 6	Epoxy-coated No. 6
Test result	15,100 lb	12,750 lb
		11,000 lb
		10,100 lb
Average test result	15,100 lb	11,312 lb
With factor of safety of 4	3,775 lb	2,828 lb

6-inch embedment depth

Bar type	Plain No. 6	Epoxy-coated No. 6
Test result	20,000 lb	16,000 lb
		15,750 lb
		13,150 lb
Average test result	20,000 lb	14,975 lb
With factor of safety of 4	5,000 lb	3,744 lb

C12.1.9.2.2 TL-4 barrier rails

C12.1.9.2.2.2 End sections

May 2013 ~ Sloped transitions for rigid barrier rail

The following information is from University of Nebraska via the Design Bureau.

> When transitioning the height of a rigid barrier, a taper rate of 10:1 is preferred. Where a more aggressive rate is needed, apply the following:
>
> - Where the height of the lower barrier is less than 32 inches, use a maximum taper rate of 8:1.
> - Where the height of the lower barrier is 32 inches or greater, use a maximum taper rate of 6:1.

C12.1.9.4.2 Decks

2011 ~ Deck replacement

As the inventory of Iowa bridges ages, a deck overlay is not always sufficient for repair of a deteriorated deck, and the deck may need to be replaced. Generally deck replacements are the responsibility of final design, but the preliminary designer needs to be involved in projects that include significant bridge widening. There have been problems with deck replacement projects when bridges settled in service. Without surveys of the existing decks, the project plans showed deck elevations that would have resulted in very thick decks. Therefore the final designer needs to request a deck survey and base the deck elevations on the survey rather than on the original bridge plans.

A second issue with deck replacements is the resistance of existing angle-plus-bar shear lugs that were used in composite steel beam-deck design from about 1947 to about 1970. The ultimate strength (nominal resistance) of those lugs can be determined approximately from a modified AASHTO Standard Specifications channel connector formula. The formula is mentioned (but not given) in Part I of the final report for Iowa Highway Research Board project HR-238 and is as follows:

$$S_u = (550)\,(1.5\,t)\,(W)\,(f'_c)^{0.5}$$

S_u = ultimate strength (nominal resistance), pounds
t = angle thickness, inches
W = angle width perpendicular to centerline of beam, inches
f'_c = 28-day strength of concrete in the new deck, psi

Shear resistance may be augmented with new shear studs if the existing angle-plus-bar lugs are insufficient based on design computations.

In addition, because the existing lugs and top flanges may be damaged during deck removal, there should be a field inspection to determine damage to the lugs and flanges. Any cracks in lugs above tension flanges need to be ground out so that cracks do not progress into the flanges. Also, gouges, nicks, and cuts in the tension flanges need to be repaired. After all damage has been addressed new shear studs need to be added to replace any shear resistance lost due to damage and repair of damage.

There is no specific information available for fatigue resistance of angle-plus-bar shear lugs.

During design the designer also needs to address potential lateral buckling of steel beams in superstructures with integral abutments. During service conditions the closely spaced shear connections to the deck prevent lateral buckling of beams in compression but, when the deck is removed, the lateral support is widely spaced at diaphragms only. In another state, the summer sun increased temperature in the steel beams, the beams expanded, pushed against the integral abutments, were unable to move the abutments back into the approach fills, and buckled laterally between diaphragms.

Reference: Klaiber, F.W., D.J. Dedic, K.F. Dunker, and W.W. Sanders, Jr. (1983). *Strengthening of Existing Single Span Steel Beam and Concrete Deck Bridges, Final Report Part I.* Engineering Research Institute, Iowa State University, Ames, Iowa. (Available on the Iowa DOT web site at:

https://iowadot.gov/research/reports/Year/2003andolder/fullreports/HR-238.pdf)

C12.1.9.5.2 Cleaning and painting

1 November 2005 ~ Removal of Hazardous Paint (Comments regarding EPA number from Brad Azeltine, Location and Environment Bureau, edited and added 27 December 2005)

Brad Azeltine's clarification on the timing of obtaining the EPA ID number: We need to wait until the painting contractor has generated some blast waste so it can be sampled and analyzed before we request a generator ID number from EPA (to confirm we have a hazardous waste). We also need the contractor to provide the quantity of waste expected to be generated, the estimated time period of the waste generation, and the expected number and timing of waste shipments. In other words, we typically won't have an ID number until the work is actually in progress. However, this is a moot point for those bridges that already have an EPA ID number (e.g. US20 J.D. Bridge, Allamakee IA9 over the Mississippi, Pottawattamie I-80 over the Missouri, etc.) In those cases, the ID number could be placed on the plans.)

C12.1.11 Concept statements

2024 ~ Process for Determining Traffic Management Strategies for Narrow Bridges

In 2022, several stakeholders at the Iowa DOT identified the need to address traffic management on "narrow bridges" on I-80, as increasing traffic volumes rendered our historical traffic management strategies inefficient. A "narrow bridge" is defined as a bridge on a four-lane highway having a deck width of 39 feet or less, since our traffic control options are significantly limited at or below this width. A survey of our bridge records indicates there are 120 narrow bridges on I-80, let alone the rest of Iowa's interstate network. As such, the Transportation Development and Systems Operations Divisions asked for a metric and process to help determine the best traffic safety and mobility mitigation for projects that include narrow bridges. The goal was to develop a uniform process that is easy to use to determine the best mitigations for these projects. A task force was established to develop better tools to make these decisions for narrow bridges. After working through several scenarios, the task force determined that the preferred traffic control strategy should be selected when the concept is completed. To best support the concept writers, the task force determined that a process flow chart supported by a matrix of bridge maintenance and construction work types and traffic control strategies would provide the desired

guidance. The writeup that follow serves as an outline and instructions for the use of the flow chart and matrix.

Refer to "Traffic Evaluation Flow Chart for Narrow Bridges" below.

Project Work Type

As a first step in this process, select the work type to accomplish the needed repair. For this first step, do not take traffic management into account; that will be accounted for throughout this process. This step identifies the minimum work type needed to complete the repair as cost-effectively as possible.

Traffic Management Options

The Traffic Management Matrix (TMM) presents options for traffic control depending on the work duration for a given work type. The options are graded from most cost effective to least cost effective. Refer to the instructions below.

When selecting an initial traffic control option, start with the most cost effective. If that option proves to be feasible, the process is complete. If it is not, then revisit the options in the matrix and select the next possibility. Continue in this fashion until a solution is found or it is time to consider a different work type for the traffic and bridge needs.

Closure Review

- ## Find Allowable Closures

When developing the traffic control options for a project, navigate to the Work Zone Reference Library (WRL: https://iowadot.gov/workzonereferencelibrary) and locate the "District Static Lane Closure Maps" link on the left-hand side. Click the map for the appropriate district and the map will open. Note: some maps have more than one page.

- ## Review Closure Maps

Locate your project location on the map. If your route is not shown (or it is shown but not shaded), there are no restrictions on the duration of lane closures; move on to “Check for Unique Restrictions.” If the route is shown and shaded, move on to the “Review Work Durations” step. Note: these maps focus on the higher-volume roadway network (all Interstates, some expressways, and some primary routes in Metro areas or other areas of high traffic volumes). Not all routes are shown for a district if they don’t meet the criteria.

- ## Review Work Durations

Locate the closure restriction information matching the color of the shading at the project location. If the chosen work type and traffic control scenario falls within the allowable closures, the step is complete; move on to “Check for Unique Restrictions.” If not, additional analysis will be needed; proceed to “Advanced Closure Review.” Note: If there are questions about the restriction information, contact the TSMO Engineer for the area in question.

- ## Check for Unique Restrictions

If the work type, work duration, and permissible closure windows align, the last check is to look for special circumstances. This must be done in collaboration with District staff (most likely the TSMO Engineer). Any restrictions regarding holidays, special events, other projects, and/or other circumstances should be reviewed to affirm the selected method of traffic control will be successful.

- ## Advanced Closure Review

This step will be needed if the work type, work duration, and permissible closure windows do not align. The starting point for this on is the Lane Closure Planning Tool (LCPT: https://apps.iowadot.gov/lcpt/).

The LCPT can show seasonal, time of day, and day of week travel patterns. There may be opportunities to complete the work within these additional windows.

The TSMO Engineer can assist with utilization of the LCPT if necessary. Additionally, the TSMO Engineer should be consulted if the project is within an interchange (system or service), or the traffic control may spill into the influence area of a systems interchange. This type of evaluation may require a review beyond the capabilities of the LCPT.

- ## Work Zone Mitigation Team Meeting

A Work Zone Mitigation Team may be assembled for the project if an Advanced Review is necessary. This optional step should be included if the project requires advanced traffic control scenarios and is the best way to achieve consensus from a wide variety of staff before completing the project concept.

Members of this team should include:

- Work Zone Operations Engineer, Bureau of Construction & Materials
- Special Projects Engineer, Bureau of Traffic & Safety

- Work Zone Design Engineer, Bureau of Design
- Assistant District Engineer, District Staff
- District Construction Engineer, District Staff
- Traffic Technician, District Staff
- Regional TSMO Engineer, District Staff

The concept writer should work through traffic management options and find at least the first option for the team to review. It would be recommended to have one additional option prepared as well. When scheduling the team meeting, an agenda will be helpful to discuss the issues at hand and guide the team to a decision.

• Start Iteration

If the Advance Closure Review fails to yield a successful traffic management strategy, the concept writer should review other options available in the Traffic Management Matrix. It is possible some projects may be required to reconsider the work type in order to address traffic needs.

Acceptable Traffic Approach

After an acceptable traffic management solution is found, the next steps are to include the proposed solution in the project concept and to complete the Traffic Critical Project (TCP) Checklist (https://webapps.srfconsulting.com/idottcp/). If a Work Zone Mitigation Team was used be sure to distribute meeting notes to the team.

Using the Traffic Management Matrix (TMM)

The objective of the narrow bridge Traffic Management Matrix (TMM) is to provide designers, or concepting engineers, a preliminary guidance tool to select an acceptable traffic control option to implement for the project work type on multi-lane divided highways and interstates. The overarching goal is to find a traffic control strategy that reduces the risk of work zone accidents at the site, but also to optimize the project cost and duration of traffic interruption as appropriate for the project site.

What you need to know about the TMM:

- The matrix is colored coded on a sliding scale for the most economical solution (green cells) and most costly solution (red cells).
- The general pattern will be to start on the left side and use the heat map to balance the appropriate amount of traffic duration impact with the cost.
- The traffic control baselines used to predict cost economy are comprised of three criteria: (1) lanes maintained during work activity, (2) duration of traffic impact, and (3) use/no use of detour pavement.
- The work types are color coded to match the traffic control baselines.

Use the TMM to implement the most economical traffic solution possible. Here are some strategies for using the TMM:

- Use the traffic control baseline as the “first option” for that work type because it offers economy and appropriate work zone strategies.
- After selection of a traffic control strategy, return to the "Traffic Evaluation Flow Chart for Narrow Bridges." If that traffic control strategy is unacceptable, select another option from the TMM that is to the right of the previous option.
- The traffic control strategies associated with higher costs on the heat map, or a condensed work period for a work type (i.e. ABC) should be reviewed with the District ADE, Project Delivery Bridge Engineer, and Traffic Mitigation team prior to implementation.
- Some strategies are noted with an asterisk (*) on the heap map because it is viewed to be outside the normal recognized solution, but it is still considered viable if properly researched by the designer and Traffic Mitigation Team.

The traffic control management solutions represent the work zone on divided multi-lane roadways (e.g. I-80, I-35, US 30, etc.), but the work type represents the work on one bridge (for one bound of traffic). Potential traffic management solutions may exist beyond this matrix.

Traffic Evaluation Flow Chart for Narrow Bridges

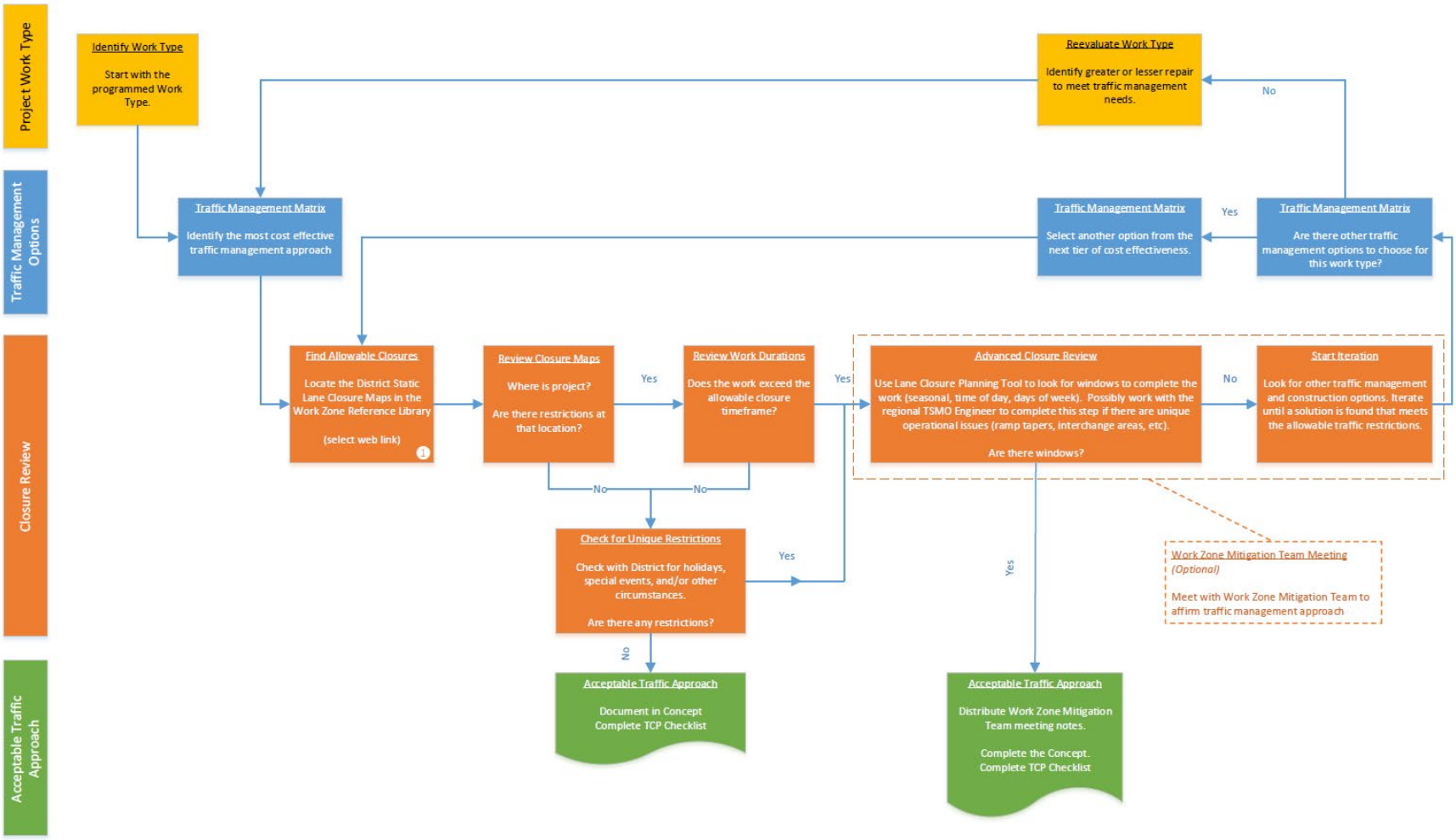

1 Closures refer to impacts to existing lanes

Traffic Management Matrix (TMM) for High Volume Divided Highways and Interstates for Bridge Repairs

Version 7 [05-10-2024]

Advisory Statement for User:

The traffic control management solutions represent the work zone on a high-volume, divided multi-lane roadway (both bounds included) with a total AADT of approximately 15,000 or greater (e.g. I-80, I-35, I-380, urban U.S. 30, urban U.S. 218, etc.), but the work type represents the work on one bridge (for one bound of traffic). The user of the TMM shall strive to implement the most economical traffic solution if possible. The matrix is colored coded on a sliding scale for the most economical solution (green cells) and most costly solution (red cells). The user of the matrix shall note the baselines shown to predict cost economy is based on three criteria: (1) lanes maintained during work activity, (2) duration of traffic impact, and (3) use/no use of detour pavement. The user will notice that work types are color coded to match the baselines for Traffic Control strategies. The baseline traffic strategy is meant to be the “first option” for that work type because it offers economy and appropriate work zone strategies. The general pattern will be to start on the left side and use the heat map to balance the appropriate amount of traffic duration impact with the cost. After the initial selection of the traffic control method, the designer shall proceed to the "Traffic Evaluation Flow Chart for Narrow Bridges." If the traffic control option is rejected by the flow chart evaluation, return to the Traffic Management Matrix and proceed to evaluate more options to the right of the previous option. The traffic control solutions associated with higher costs on the heat map, or a condensed work period for a Work Type (i.e. ABC) may need to be evaluated with the District ADE, Project Delivery Bridge Engineer, and Traffic Mitigation team prior to implementation. Some strategies are noted with an asterisk (*) on the heap map because it is viewed to be outside the normal recognized solution, but it is still considered viable if properly researched by the designer and Traffic Mitigation Team. Potential traffic management solutions may exist beyond this matrix.

HEAT MAP LEGEND	
	BEST ECONOMY
	BETTER ECONOMY
	AVERAGE COST
	ABOVE AVERAGE COST
	PREMIUM CONSTRUCTION
TRAFFIC CONTROL & WORK TYPE COST INFLUENCE	

~WORK TYPE	^STRUCTURAL limitations to be evaluated prior to Traffic Control Validation	# TRAFFIC IMPACT DURATION	~TRAFFIC CONTROL MANAGEMENT ALTERNATIVES ON HIGH VOLUME MULTI-LANE DIVIDED HIGHWAYS										
			Single Lane Closure (one bound)	Two Stage Single Lane Closure (one bound)	2-Lane Shift (one bound)	One Direction, 3 phases, maintain 2-lanes (one bound)	2-Lane 2-way using Crossover	Contraflow using Crossover (bridge widths of 36 ft. or greater)	**Bridge Widening & Two Lane Shifts (one bound)	Contraflow using **Widening & Crossover	**All lanes use of Off-Alignment	Detour on Ramps if Interchange (short duration)	Extended Detour off of main roadway at nearby interchange
	LANES MAINTAINED FOR ONE BRIDGE WITH MAXIMUM OF TWO LANES MAINTAINED		ONE	ONE	TWO	TWO	ONE	TWO	TWO	TWO	TWO	ONE	ONE
BRIDGE DECK REPLACEMENT	X	2-3 MONTHS (ABC)		*				*			*		
		≤ 6 MONTHS		*			*	*					
		≤ 1 SEASON		*			*	*					
**BRIDGE WIDENING	X	2-3 MONTHS (ABC)	*								*		
		≤ 6 MONTHS	*				*						
		≤ 1 SEASON											
BRIDGE SUPERSTRUCTURE REPLACEMENT	X	2-3 MONTHS (ABC)		*				*	*	*	*		
		≤ 6 MONTHS		*				*					
		≤ 1 SEASON		*				*					
BRIDGE SUPER STRENGTHEN	X	< 3 DAYS (ABC)				*	*	*					
		≤ 2 WEEKS		*				*					
		≤ 1 MONTH		*			*	*					
BRIDGE REHABILITATION / BRIDGE REPAIR MAJOR	X	≤ 7 DAYS (ABC)	*	*				*					
		≤ 1 MONTH	*	*				*	*	*	*		
		≤ 6 MONTHS	*	*			*	*					
BRIDGE REPAIR MINOR (i.e. rail structural repair, beam end repairs,)		≤ 24 HOURS (ABC)				*							
		≤ 3 DAYS										*	*
		≤ 2 WEEKS	*	*			*						
BRIDGE DECK OVERLAY (PC) W/ CLASS A or B or UHPC OVERLAY	X	≤ 3 WEEKS (ABC)		*				*					
		≤ 6 WEEKS		*				*					
		≤ 6 MONTHS		*			*	*					

BRIDGE DECK OVERLAY (THIN POLYMER OR LATEX MODIFIED)		≤ 48 HOURS (ABC)				*							
		≤ 3 DAYS					*					*	*
		≤ 2 WEEKS		*				*	*	*	*		
DECK JOINT REPAIR MAJOR	X	≤ 3 DAYS (ABC)		*		*		*					
		≤ 2 WEEKS		*				*				*	*
		≤ 1 MONTH		*				*					
DECK JOINT REPAIR MINOR (no PC concrete work)		≤ 1 SHIFT				*							
		≤ 24 HOURS				*							
		≤ 3 DAYS										*	*
MAINLINE BRIDGE RAISE OVER RD.		≤ 3 DAYS (ABC)									*		
		≤ 1 MONTH										*	*
BRIDGE RAISE OVERHEAD OVER MAINLINE (falsework below)		≤ 3 DAYS											
		≤ 2 WEEKS										*	*
BRIDGE PRESERVATION / PAINTING (i.e. sealer, bridge painting, epoxy injecting)		≤ 24 HOURS				*							
		≤ 3 DAYS											
		≤ 2 WEEKS					*	*					
PPCB/STEEL GIRDER REPAIR (MAJOR) OVERHEAD	X	≤ 2 WEEKS (ABC)	*	*									
		≤ 1 MONTH										*	*
		≤ 2 MONTHS											
PPCB/STEEL GIRDER REPAIR (MINOR) OVERHEAD	X	≤ 3 DAYS						*					
		≤ 2 WEEKS	*	*				*					
PPCB/STEEL GIRDER REPAIR (MAJOR) OVER LOCAL RD	X	≤ 2 WEEKS (ABC)						*			*		
		≤ 1 MONTH	*					*			*		
		≤ 2 MONTHS						*					
PPCB/STEEL GIRDER REPAIR (MINOR) OVER LOCAL RD	X	≤ 3 DAYS						*					
		≤ 2 WEEKS						*					

DECK PATCHING		≤ 3 DAYS										*	*
		≤ 2 WEEKS											
BRIDGE DECK GROOVING		≤ 24 HOURS										*	*
		≤ 3 DAYS											
RAIL RETROFIT		≤ 3 DAYS					*	*				*	*
		≤ 2 WEEKS						*					
BARRIER RAIL REPLACEMENT		≤ 1 WEEK					*	*				*	*
		≤ 2 WEEKS						*					
EPOXY INJECTION		≤ 24 HOURS										*	*
		≤ 48 HOURS											
ABUTMENT REPAIR (paving notch + short panel approach)	X	≤ 2 WEEKENDS (ABC)					*	*				*	*
		≤ 2 WEEKS						*					
BRIDGE APPROACH REPLACEMENT (Full panels + paving notch + guardrail)	X	≤ 2 WEEKENDS (ABC)					*	*				*	*
		≤ 2 WEEKS						*					
		≤ 1 MONTH						*					
****BRIDGE APPROACH REPAIR/PATCHING**	X	≤ 24 HOURS (ABC)										*	*
		≤ 3 DAYS				*							
		≤ 1 WEEK											
****BRIDGE APPROACH HMA OVERLAY (1 course/taper)**		≤ 48 HOURS										*	*
		≤ 3 DAYS											
****GUARDRAIL REPLACEMENT (assumed steel beam style)**		≤ 3 DAYS					*	*				*	*
		≤ 1 WEEK						*					

Footnotes:

~ **Baseline cost for traffic control solutions are based on three criteria which are lanes maintained, duration of traffic impact, and use of detoure pavement:**

Baseline 1 -- Traffic interruption no more than 2 weeks, maintaining one lane of traffic, and no significant detour pavement

Baseline 2 -- Traffic interruption that is completed in more than 3 days, but less than one construction season, maintain 2 traffic lanes, and no significant detour pavement

Baseline 3 -- Traffic interruption that is completed in more than 2 months, maintain 1 lane of traffic with a crossover, and use of significant detour pavement

Baseline 4 -- Traffic interruption that is completed in more than 2 months, maintain 2 lanes of traffic, and use of significant detour pavement.

Other TC solutions -- Other traffic management strategies that can be implemented as partial solutions for Work Type as applicable to the site. Not a complete solution.

^DISCLAIMER: All Traffic Control Options tabulated as potential solutions for the work type is subject to Structural Review by Bridges & Structures (Green column)

"Traffic Impact Duration" represents the time normal traffic conditions are affected by the implementation of the traffic control alternative implemented to carry out an activity or work type. Please note that some Work Types may require a group of traffic control alternatives to be implemented to carry out the full scope of the project. Any traffic solutions identified for the time duration need to be verified through Traffic Mitigation Measures and Risk Assessment to ensure the work zone condition is acceptable.

DISCLAIMER: Please note the cost information compiled for the heat map is not based on factual data or research but engineering judgement based on a peer exchange group of Iowa DOT engineers.

* Potential to use option, but cost or duration of work makes option less desirable. Discuss option with an advisory team that includes that Traffic Mitigation team for the Iowa DOT.

** Work Type is not concepted through Bridge Bureau

TABLE OF CONTENTS ~ CADD NOTES

13 CADD Notes
13.1 General
13.1.1 Sheet name conventions
13.1.2 Note cell libraries
13.1.3 Note organization
13.1.4 Abbreviations
13.1.5 References
13.2 Project
13.2.1 Index
13.2.2 Listing
13.3 New bridge
13.3.1 Index
13.3.2 Listing
13.4 Future notes
13.4.1 Index
13.4.2 Listing
13.5 Bridge repair
13.5.1 Index
13.5.2 Listing
13.6 Future notes
13.6.1 Index
13.6.2 Listing
13.7 Culvert
13.7.1 Index
13.7.2 Listing
13.8 Bridge substructure
13.8.1 Index
13.8.2 Listing
13.9 Bridge superstructure
13.9.1 Index
13.9.2 Listing
13.10 New and repair bridge detail
13.10.1 Index
13.10.2 Listing
13.11 Estimate reference
13.11.1 Index
13.11.2 Listing

13 CADD Notes

13.1 General

13.1.1 Sheet name conventions

The naming conventions for sheets may be found on the Iowa DOT website at:

https://iowadot.gov/projectdev/#30292410-quick-links
https://iowadot.gov/bridge/Automation-Tools/CONNECT-Applications

13.1.2 Note cell libraries

The Bureau maintains MicroStation cell libraries for standard notes. The cell libraries in design file format are available through the Iowa DOT web site at the following address:

https://www.iowadot.gov/bridge/automation-tools/microstation-v8-tools

The designer should use the standard notes where appropriate when developing bridge, culvert, and repair design plans. The designer should recognize, however, that the standard notes do not cover all possible conditions, and it will be necessary to add supplementary notes for each project.

The standard notes in the cell libraries also are listed in following articles in this manual.

13.1.3 Note organization

Each of the articles that follows is in sequence based on note number range, and each article begins with an alphabetical topic index. If a note has an A, B, or C suffix, the note is one of a series, and only one of the series should be used. In some cases, there are instructions for use of the note, and those instructions follow the note. Table 13.1.3 gives an overview of the notes by article, general topic, typical sheet, and note number range.

Table 13.1.3. Overview of CADD notes

Article	General Topic: Typical Sheet	Note Number Range
13.2	Project: title sheet, general notes and quantities sheet, and situation plan sheet	1-99
13.3	New bridge: general notes and quantities sheet	100-299
13.4	Future notes	300-399 reserved
13.5	Bridge repair: general notes sheet, situation plan and quantities sheet, and specific detail sheets	400-499
13.6	Future notes	500-599 reserved
13.7	Culvert: general notes and quantities sheet	600-699
13.8	Bridge substructure: pier details sheets, and abutment details sheets	700-899
13.9	Bridge superstructure: superstructure details sheets	900-999
13.10	New and repair bridge detail: general notes sheet, and specific detail sheets	1000-1099
13.11	Estimate reference: general notes and quantities sheet	Reserved

13.1.4 Abbreviations

The following abbreviations are in standard notes and on standard sheets, and the designer may use the abbreviations on project plans. Abbreviations are not used on the plan title sheet.

ABUT. – ABUTMENT
ADDL. - ADDITIONAL
ALT. – ALTERNATE
APPROX. – APPROXIMATE
B.F. – BACK FACE
BARR. – BARRIER
BKWL. – BACKWALL
BL (overlapped) – BASELINE
BOTH F. - BOTH FACES
BOTT. – BOTTOM
BRG. – BEARING or BRIDGE
CL. – CLEAR(ANCE)

CL (overlapped) – CENTERLINE
CONC. – CONCRETE
CONST. – CONSTRUCTION
CONT. – CONTINUOUS
CTR. – CENTERS
DES. – DESIGN
DIA. – DIAMETER
DIAPH. – DIAPHRAGM
DNR – DEPARTMENT OF NATURAL RESOURCES
E. – EAST
EA. – EACH
E.B. – EASTBOUND
E.F. – EACH FACE
ELEV. – ELEVATION
EQ. – EQUAL
EXCAV. – EXCAVATION
EXIST. – EXISTING
EXP. – EXPANDED or EXPANSION
EXT. – EXTENSION or EXTERIOR
F.F. – FRONT FACE
FHWA – FEDERAL HIGHWAY ADMINISTRATION
F.L. – FLOWLINE
FTG. – FOOTING
GALV. – GALVANIZED
GR. – GRADE
HDWL. - HEADWALL
H.M.A. – HOT MIX ASPHALT
HORIZ. – HORIZONTAL
H.P.C. – HIGH PERFORMANCE CONCRETE
H.S. - HIGH STRENGTH
H.W. – HIGH WATER
I-29, I-380, ETC. – INTERSTATE ROAD
IA 5, IA 92, ETC. – STATE ROAD
I.D.C. – IMPROVED DURABILITY CONCRETE
INT. – INTERIOR
INTERM. - INTERMEDIATE
I.T.S. – INTELLIGENT TRANSPORTATION SYSTEMS
JT. – JOINT
K21, F63, ETC. – COUNTY ROAD
L.A. – LEFT AHEAD
LGTH. – LENGTH
LLV – LONG LEG VERTICAL
LONGIT. – LONGITUDINAL
LT. – LEFT
MAINT. - MAINTENANCE
MATL. - MATERIAL
MAX. – MAXIMUM
MIN. – MINIMUM
M.S.E. – MECHANICALLY STABILIZED EARTH
N. – NORTH
N.B. – NORTHBOUND
NO. – NUMBER
O.C. – ON CENTER
P.C.C. – PORTLAND CEMENT CONCRETE
P.G.L. – PROFILE GRADE LINE
PL (overlapped) – PLATE

PPT. - PARAPET
PROP. – PROPOSED
QTY. – QUANTITY
R.A. – RIGHT AHEAD
RAD. – RADIUS
R.C.B. – REINFORCED CONCRETE BOX
RDWY. - ROADWAY
REINF. – REINFORCEMENT
RR – RAILROAD
RT. – RIGHT
S. – SOUTH
S.B. – SOUTHBOUND
SDWK. – SIDEWALK
SECT. - SECTION
SHLD. – SHOULDER
SHT. – SHEET
SLV – SHORT LEG VERTICAL
SPA. – SPACES
SPCG. – SPACING
ST. – STREET
STA. – STATION
STD. – STANDARD
STGG'D. - STAGGERED
STIFF. – STIFFENER
STRUCT. – STRUCTURE
SUPERELEV. – SUPERELEVATION
SYM. – SYMMETRICAL
TEMP. – TEMPORARY
TRANSV. – TRANSVERSE
TWP. - TOWNSHIP
TYP. – TYPICAL
U.A.C. – USE AS CONSTRUCTED
US 20, US 65, ETC. – FEDERAL HIGHWAY
VAR. – VARIES or VARIABLE
VERT. – VERTICAL
W. – WEST
W.B. – WESTBOUND
W.P. – WORKING POINT

13.1.5 References

American Association of State Highway and Transportation Officials (AASHTO). *Guide Design Specification for Bridge Temporary Works*. Washington: AASHTO, 1995. Note that this guide is based on the 5th edition of *Formwork for Concrete* and the 1991 edition of *National Design Specification for Wood Construction* and *Supplement.*

13.2 Project

These notes usually are placed on the title sheet, on the general notes and quantities sheet, and on the situation plan sheet.

13.2.1 Index

Abutment modification
Stub abutment piling behind MSE walls..... E55

Construction permit
Sovereign lands E25
Deck
Deck pour monitoring E75
Design stresses (See Specifications and design stresses below.)
Pollution prevention plan
See design sheet E40A
Shown elsewhere in plans E40B
Tied projects (includes PPP and 404 permit) E40C
Project coordination
More than one contractor in area E46
Reinforcing Bars, Dowels
General notes E48
Roadway quantities
Tied projects E44
Shown elsewhere in plans E45
Seals
Index……E20
Engineering seals note for multiple asset ID structures ..... E22Specifications and design stresses
LRFD superstructure and substructure bridge ~~2017~~ E50E
Nonstandard culverts and extensions E50B
Bridge repair E50
Subdrain
Slope rate……E60
Traffic control plan
Roadway closed, responsibility of road contractor E33
Roadway closed, shown elsewhere E31B
Roadway closed, tied projects E30B
Roadway not open, relocation E34
Roadway open, see design sheet E32
Roadway open, shown elsewhere E31A
Roadway open, tied projects E30A
Working drawing and calculation submittals
Item list……E65
Steel bridge
Girder erection plan……E70

13.2.2 Listing

E20: Seals, index

INDEX OF SEALS

SHEET NO.	NAME
1	
2	
3	
4	
5	

E22: Seals, engineering seals note for multiple asset ID structures

ENGINEERING SEAL NOTE

REFER TO PROJECT PLANS OF _____ COUNTY WITH DESIGN NO._____, AND ASSET ID NO. _____ FOR THE STRUCTURAL ENGINEERING SEAL APPLICABLE TO THIS DESIGN.

For project plans with multiple structure Asset ID numbers submitted in a single plan set to Contracts Bureau, the note should be placed on the first sheet for each additional structure. The Engineer's structural seal is placed on the first sheet or title sheet of the plan set, but will be stored in SIIMS under that Asset ID. The plan note for subsequent designs references the Asset ID, County, and Design number of the first structure in the plan. This plan note allows for multiple designs to be separated into SIIMS and helps future DOT employees find where the Engineer's Seal of Record is stored. For NBI structures, the Asset ID is the same as the FHWA number.

E25: Construction permit, sovereign lands

SOVEREIGN LANDS CONSTRUCTION PERMIT ____ SHALL APPLY TO WORK ON THIS PROJECT. THE IOWA DNR CONSERVATION OFFICER FOR THE AREA SHALL BE CONTACTED. AT LEAST 48 HOURS PRIOR TO COMMENCING WORK CONTACT ____ AT ____.

Fill in the permit number, name of the local Iowa DNR conservation officer, and full telephone number of the officer. The officer's name and telephone number are available on the Sovereign Lands Construction Permit for the bridge project.

E30A: Traffic control plan, roadway open, tied projects

TRAFFIC CONTROL PLAN

THE ROADWAY WILL BE OPEN TO THRU TRAFFIC. REFER TO THE TRAFFIC CONTROL PLAN INCLUDED IN THE TIED ROAD PLANS, PROJECT NO. ?.

When traffic is maintained through the project, but the traffic control plan is included in a tied project, use this note and fill in the tied project number.

E30B: Traffic control plan, roadway closed, tied projects

TRAFFIC CONTROL PLAN

THE ROADWAY WILL BE CLOSED TO THRU TRAFFIC. REFER TO THE TRAFFIC CONTROL PLAN INCLUDED IN THE TIED ROAD PLANS, PROJECT NO. ?.

When the roadway is closed to traffic, but the traffic control plan is included in a tied project, use this note and fill in the tied project number.

E31A: Traffic control plan, roadway open, shown elsewhere

TRAFFIC CONTROL PLAN

THE ROADWAY WILL BE OPEN TO THRU TRAFFIC. REFER TO THE TRAFFIC CONTROL PLAN SHOWN ELSEWHERE IN THESE PLANS.

When traffic is maintained through the project we will continue to get traffic control notes and plans from the Design Bureau for inclusion in our plans.

E31B: Traffic control plan, roadway closed, shown elsewhere

TRAFFIC CONTROL PLAN

THE ROADWAY WILL BE CLOSED TO THRU TRAFFIC. REFER TO THE TRAFFIC CONTROL PLAN SHOWN ELSEWHERE IN THESE PLANS.

E32: Traffic control plan, roadway open, see design sheet

TRAFFIC CONTROL PLAN

THE ROADWAY WILL BE OPEN TO THRU TRAFFIC. REFER TO THE TRAFFIC CONTROL PLAN ON DESIGN SHEET x.

When traffic is maintained through the project we will continue to get traffic control notes and plans from the Design Bureau for inclusion in our plans.

E33: Traffic control plan, roadway closed, responsibility of contractor

TRAFFIC CONTROL PLAN

THE ROADWAY WILL BE CLOSED TO THRU TRAFFIC. ROAD CLOSURE WILL BE THE RESPONSIBILITY OF THE ROAD CONTRACTOR AS SHOWN ON THE ROAD PLANS.

E34: Traffic control plan, roadway not open, relocation

TRAFFIC CONTROL PLAN

THIS STRUCTURE IS BEING CONSTRUCTED ON A RELOCATION AND THE ROAD WILL NOT BE OPEN TO TRAFFIC UNTIL AFTER COMPLETION OF CONSTRUCTION.

E40A: Pollution prevention plan, see design sheet

SEE DESIGN SHEET x FOR POLLUTION PREVENTION PLAN.

E40B: Pollution prevention plan, shown elsewhere in plans

POLLUTION PREVENTION PLAN SHOWN ELSEWHERE IN THESE PLANS.

E40C: Pollution prevention plan, tied projects (includes PPP and 404 permit)

404 PERMIT INFORMATION AND THE POLLUTION PREVENTION PLAN ARE INCLUDED IN THE TIED ROAD PLANS, PROJECT NO. ?.

Use this note when road sheets are not included because the road project is tied to the bridge project. This note precludes OBS from having to track down 404 permit information for tied projects. In cases where road sheets are included in the bridge plans, the PPP and 404 permit information will automatically be included making this note unnecessary.

E44: Roadway quantities, tied projects

ROADWAY QUANTITIES ARE INCLUDED IN THE TIED ROAD PLANS, PROJECT NO. ?.

E45: Roadway quantities, shown elsewhere in plans

ROADWAY QUANTITIES SHOWN ELSEWHERE IN THESE PLANS.

E46: Project coordination, more than one contractor in area

DURING CONSTRUCTION OF THIS PROJECT THE BRIDGE CONTRACTOR WILL BE REQUIRED TO COORDINATE OPERATIONS WITH THOSE OF OTHER CONTRACTORS WORKING WITHIN THE SAME AREA. OTHER WORK IN PROGRESS DURING THE SAME

PERIOD OF TIME WILL INCLUDE, BUT IS NOT LIMITED TO, CONSTRUCTION OF THE FOLLOWING PROJECTS:

_____ _____
_____ _____
_____ _____
_____ _____
_____ _____

This note is to be used where more than one contractor is in the area. Check with the supervising Section Leader about which other projects will be in progress while the bridge/culvert contractor is working.

Verify this information with the District Construction Engineer and/or Assistant District Engineer prior to hand in. Modify the note to indicate "Culvert Contractor" when project involves culvert construction.

E48: Reinforcing Bars, Dowels

ALL REINFORCING BARS AND BARS NOTED AS DOWELS SUPPLIED FOR THIS STRUCTURE SHALL BE DEFORMED REINFORCEMENT UNLESS OTHERWISE NOTED OR SHOWN.

Use this note for all dowel bar situations. The note prevents the contractor from using smooth bars instead of deformed bars.

E50: Specifications and design stresses, bridge repair

SPECIFICATIONS:
DESIGN: AASHTO SERIES OF 2002.
CONSTRUCTION: IOWA DEPARTMENT OF TRANSPORTATION STANDARD SPECIFICATIONS FOR HIGHWAY AND BRIDGE CONSTRUCTION, SERIES 2023, PLUS APPLICABLE GENERAL SUPPLEMENTAL SPECIFICATIONS, DEVELOPMENTAL SPECIFICATIONS, SUPPLEMENTAL SPECIFICATIONS AND SPECIAL PROVISIONS SHALL APPLY TO CONSTRUCTION WORK ON THIS PROJECT.
?
?

DESIGN STRESSES:
DESIGN STRESSES FOR THE FOLLOWING MATERIALS ARE IN ACCORDANCE WITH THE AASHTO STANDARD SPECIFICATIONS FOR HIGHWAY BRIDGES, SERIES OF 2002.
REINFORCING STEEL IN ACCORDANCE WITH SECTION 8, GRADE 60.
CONCRETE IN ACCORDANCE WITH SECTION 8, f'c = 4.0 KSI. .
PRESTRESSED CONCRETE BEAMS, SEE DESIGN SHEET ?.
STRUCTURAL STEEL IN ACCORDANCE WITH SECTION 10. ASTM A709 GRADE 36, GRADE 50, AND GRADE 50W (AASHTO M270 GRADE 36, GRADE 50, AND GRADE 50W).
FATIGUE STRESS CYCLES BASED ON CASE ?.

These standard bridge design notes are to be used on the front estimate sheet. See BDM Article 12.1.12.2 for more information.

E50B: Specifications and design stresses, nonstandard culverts and extensions

SPECIFICATIONS:
DESIGN:
AASHTO LRFD BRIDGE DESIGN SPECIFICATIONS, 5TH ED., SERIES OF 2010.

CONSTRUCTION:
IOWA DEPARTMENT OF TRANSPORTATION STANDARD SPECIFICATIONS FOR HIGHWAY AND BRIDGE CONSTRUCTION, CURRENT SERIES, PLUS APPLICABLE GENERAL SUPPLEMENTAL SPECIFICATIONS, DEVELOPMENTAL SPECIFICATIONS, SUPPLEMENTAL SPECIFICATIONS AND SPECIAL PROVISIONS.

DESIGN STRESSES:
DESIGN STRESSES FOR THE FOLLOWING MATERIALS ARE IN ACCORDANCE WITH THE AASHTO LRFD BRIDGE DESIGN SPECIFICATIONS, 5TH ED., SERIES OF 2010:
REINFORCING STEEL IN ACCORDANCE WITH AASHTO LRFD SECTION 5, GRADE 60.
CONCRETE IN ACCORDANCE WITH AASHTO LRFD SECTION 5, f'c = 4.0 KSI.

These culvert design notes are to be used on the front estimate sheet for new culverts (non-standard sizes and fills) and extensions.

E50E: Specifications and design stresses, LRFD superstructure and substructure bridge ~~2017~~

SPECIFICATIONS:
DESIGN: AASHTO LRFD 10th Ed, SERIES OF 2024, EXCEPT AS NOTED IN THE CURRENT IOWA BRIDGE DESIGN MANUAL.

CONSTRUCTION: IOWA DEPARTMENT OF TRANSPORTATION STANDARD SPECIFICATIONS FOR HIGHWAY AND BRIDGE CONSTRUCTION, SERIES 2023, PLUS APPLICABLE GENERAL SUPPLEMENTAL SPECIFICATIONS, DEVELOPMENTAL SPECIFICATIONS, SUPPLEMENTAL SPECIFICATIONS AND SPECIAL PROVISIONS SHALL APPLY TO CONSTRUCTION WORK ON THIS PROJECT.
?
?

DESIGN STRESSES:
DESIGN STRESSES FOR THE FOLLOWING MATERIALS ARE IN ACCORDANCE WITH THE AASHTO LRFD BRIDGE DESIGN SPECIFICATIONS, 10th Ed, SERIES OF 2024, EXCEPT AS NOTED IN THE CURRENT IOWA BRIDGE DESIGN MANUAL.

REINFORCING STEEL IN ACCORDANCE WITH AASHTO LRFD SECTION 5, GRADE 60 FOR EPOXY COATED AND NON-COATED, AND GRADE 60 OR 75 FOR STAINLESS.

CONCRETE IN ACCORDANCE WITH AASHTO LRFD SECTION 5, f'c = 4.0 KSI, EXCEPT PRESTRESSED BEAM CONCRETE AS NOTED [AND BRIDGE DECK CONCRETE f'c = 4.5 KSI. REFER TO ~~DS-15056~~"DEVELOPMENTAL SPECIFICATIONS FOR STRUCTURAL CONCRETE (4500 PSI OR GREATER)" FOR BRIDGE DECK CONCRETE].

PRESTRESSED CONCRETE BEAMS, SEE DESIGN SHEET?

STRUCTURAL STEEL IN ACCORDANCE WITH AASHTO LRFD SECTION 6. ASTM A709 GRADE 36, GRADE 50, AND GRADE 50W (AASHTO M270 GRADE 36, GRADE 50, AND GRADE 50W).
FATIGUE DESIGN BASED ON FATIGUE I LOAD COMBINATION AND INFINITE LIFE (or FATIGUE DESIGN BASED ON FATIGUE II LOAD COMBINATION AND 75 YEAR FINITE LIFE WITH SINGLE LANE ADTT ($ADTT_{SL}$) OF ?.

This LRFD bridge design note is to be used on the front estimate sheet when the superstructure and substructure were designed by the AASHTO LRFD 10th Edition, Series 2024. Some PPCB Designs currently require 4.5 ksi deck concrete so the exception in brackets must be included if that is the case. ~~DS-15056 shall be included~~

~~when deck concrete strength exceeds 4.0 ksi.~~ Bid item 2403-0100030 shall be used for the deck concrete when the deck concrete is 4.5 ksi or greater regardless of whether Class C or HPC is specified. If HPC is also specified for the deck concrete when the deck concrete is 4.5 ksi or greater, then reference the Developmental Specification for HPC by title, "Developmental Specifications for High Performance Concrete for Structures", in the bid item reference note for bid item 2403-0100030. See individual PPCB standard sheets to determine which beams require deck concrete strengths greater than 4.0 ksi.

E55: Abutment modification, stub abutment piling behind MSE wall

THE BRIDGE CONTRACTOR SHALL DRIVE ABUTMENT PILING BEFORE THE MECHANICALLY STABILIZED EARTH (MSE) WALL IS CONSTRUCTED AND MAINTAIN PROPER POSITION OF PILING WHILE THE MSE WALL IS BEING CONSTRUCTED. THE PILING SHALL BE TIED TOGETHER BY MECHANICAL MEANS AND ANCHORED TO PREVENT DISPLACEMENT DURING BACKFILLING OPERATIONS AND MSE WALL CONSTRUCTION. THE CONTRACTOR SHALL SUBMIT A PLAN TO THE ENGINEER FOR APPROVAL OF THE CONNECTIONS AND ANCHORAGE.

This CADD general note shall be provided in the plans requiring the contractor to tie the abutment piling group together and provide anchorage for the pile group to prevent shifting of the piles during backfilling. This note may be modified for special cases, such as partial driving, addition of tie backs, or if additional rows of piles are required for the abutments.

E60: Subdrain, slope rate

NOTE: SUBDRAIN SLOPED x"
PER FOOT FROM _____
TO EXTEND THRU FILL (TYPICAL BOTH ABUTMENTS).

E65: Working drawing and calculation submittals, item list

WORKING DRAWING AND CALCULATION SUBMITTALS

WORKING DRAWINGS AND CALCULATIONS SHALL BE SUBMITTED FOR THE FOLLOWING ITEMS SHOWN IN THE TABLE BELOW. (NOTE ADDITIONAL WORKING DRAWINGS AND CALCULATIONS MAY BE REQUIRED IN ACCORDANCE WITH ARTICLE 1105.03 OF THE STANDARD SPECIFICATIONS.)

SUBMITTAL REQUIREMENTS FOR WORKING DRAWINGS AND CALCULATIONS SHALL BE IN ACCORDANCE WITH 1105.03 OF THE STANDARD SPECIFICATIONS FOR HIGHWAY AND BRIDGE CONSTRUCTION OF THE IOWA DEPARTMENT OF TRANSPORTATION. THE ABSENCE OF A CERTIFICATION REQUIREMENT FOR A SUBMITTAL DOES NOT RELIEVE THE CONTRACTOR OF THE RESPONSIBILITY TO ATTAIN CERTIFICATION.

CALCULATION SUBMITTALS IN THIS TABLE WHICH ARE ASSOCIATED WITH WORKING DRAWING SUBMITTALS SHALL BE SUBMITTED ON THE SAME DAY. REVIEW TIME FOR CALCULATION SUBMITTALS SHALL BE OF THE SAME DURATION AS AND RUN CONCURRENTLY WITH REVIEW TIME FOR ASSOCIATED WORKING DRAWINGS. THE CALCULATION SUBMITTALS LISTED IN THE TABLE ARE NOT MEANT TO BE AN EXHAUSTIVE LIST AND DO NOT RELIEVE THE CONTRACTOR FROM PROVIDING ADDITIONAL CALCULATION SUBMITTALS IF REQUESTED BY THE ENGINEER.

NO.	WORKING DRAWING DESCRIPTION	WORKING DRAWING FILE NAME CONVENTION FOR SUBMITTAL	CERTIFIED BY IOWA P.E. (YES/NO)
1			

2			
3			
4			
X			
NO.	CALCULATION DESCRIPTION	CALCULATION FILE NAME CONVENTION FOR SUBMITTAL	CERTIFIED BY IOWA P.E. (YES/NO)
5			
6			
7			
X			

This note is to be used for all projects involving working drawing and calculation submittals. Designers shall completely fill out the table for all required working drawings and calculations. File name convention for working drawings and calculations shall be as follows:

(Paren)_County_DesignNumber_SubmittalDescription.pdf
Example: (090)_Blackhawk_Design915_DeckDrains.pdf

Many working drawing submittals will not require certification by an Iowa PE. The primary exception is working drawing submittals that have a corresponding calculation submittal with a certification requirement. Certification by an Iowa PE is required for:

- Falsework for slab bridges per IDOT SS 2403.03, L, 1, a and 2403.03, L, 7, a
- Shoring plans
- Transparent stay-in-place deck forms, when allowed
- Cofferdams, when a submittal is requested
- Temporary sheet pile, when a submittal is requested
- Steel girder erection plan in connection with DS-15076

List any calculation submittals required in Special Provisions in the table above. Calculation submittals should ordinarily require certification by an Iowa PE. While contractors may be expected to perform calculations for a variety of work, calculation submittals to the DOT are only requested, on occasion, for the following:

- Falsework for slab bridges when deemed important
- Shoring plans when deemed important
- Transparent stay-in-place deck forms, when used, is required
- Cofferdam design when deemed important and a bid item is present for Excavate and Dewater
- Temporary sheet pile when deemed important
- Steel girder erection plan in connection with DS-15076 when deemed important

The designer may request calculation submittals for other work if it is determined to be in the interest of the State to do so and the Chief Structural Engineer approves of the request. If calculation submittals are requested the designer shall review the calculations and stamp them similar to working drawings.

E70: Steel bridge, girder erection plan

IN ACCORDANCE WITH IOWA DOT STANDARD SPECIFICATIONS SECTION 1105, THE CONTRACTOR SHALL SUBMIT A GIRDER ERECTION PLAN (GEP) CONSISTING OF ERECTION PLANS, ERECTION PROCEDURES, AND ERECTION ENGINEERING CALCULATIONS TO THE ENGINEER ACCORDING TO SPECIAL PROVISION SP-XX-XX “GIRDER ERECTION PLAN”.

A girder erection plan only needs to be submitted when the steel bridge meets one of the conditions found in BDM 5.5.1.4.4.

13.3 New bridge

These notes usually are placed on the general notes and quantities sheet.

13.3.1 Index

Approach fills
- Driving piles, waiting period E175
- Not in same contract, shape berms E183A
- Tied projects, shape berms E183B

Bridge deck
- Dimension table E110
- Two-course, surface preparation E234

Concrete barrier rails
- Slipform method, concrete class E188

Concrete sealer
- Bridge seats E181

CCS falsework
- Staged construction E192

Earth retention
- Behind abutments E170
- Temporary shoring E171
- Temporary shoring, PE required E172

Excavation
- Channel by bridge contractor, approximate limits E140
- Channel by others, separate contracts E141
- Channel not in contract, shape berms E142A
- Channel tied contracts, shape berms E142B
- Class 20 assumption E145
- Roadway by others, separate contract E143A
- Roadway, tied contract E143B
- Sites for excess material E14

Existing structure
- Faint lines E102
- Field verify dimensions E101
- Repair, widening, etc. E100A
- Repair, widening, etc. structural steel E100B

Guardrail
- Placed by others, separate contracts E105A
- Included in tied projects E105B

Live load
- HL-93 bridge E104D
- HS20-44 (MS18) E104A
- HS20-44 (MS18) plus alternate military E104B

Longitudinal grooving
- Is in a tied project E206
- Paving by others E205

Nuclear density checks
- Deck test wells E233

Paint
- Non-weathering steel, new bridge E214
- Weathering steel, new bridge E213

Pile points
- H-piles E187

Precast concrete deck panels
Option E200
Prebored holes
Integral abutment piles E184
Pretensioned prestressed concrete beams
Nonstandard E201
Temporary bracing E202
Railroad overpass
Coordination E108
Reinforcing
English, metric designation on plans E189
Removal of existing structure
Bridge E131
Feather edging E13
Miscellaneous E132
Partial E130
Scrape test
Lead and chromium ppm (in BDM 13.5.2) E480
Transparent Stay-In-Place Deck Forms
Contractor's Option E235
Steel beams
Temporary bracing E204
Traffic control
Road closed E120
Road open E121
Utility notification
Rural E103A
Urban E103B
Weathering steel
Stain protection for substructure concrete E186
Wing slopes
Dress after bridge repair E185

13.3.2 Listing

E100A: Existing structure, repair, widening, etc.

ELECTRONIC COPIES OF ORIGINAL DESIGN PLANS ARE AVAILABLE TO THE CONTRACTOR AS PART OF THE E-FILES SUPPLIED WITH THE CONTRACT DOCUMENTS. DIMENSIONS SHOWN ON THESE PLANS ARE BASED ON DESIGN PLANS (ORIGINAL DESIGN NO. _____).

Use this note on all repair work, widening or remodeling, culvert extensions, or retrofit rails.

E100B: Existing structure, repair, widening, etc., structural steel

ELECTRONIC COPIES OF THE ORIGINAL DESIGN PLANS ARE AVAILABLE TO THE CONTRACTOR AS PART OF THE E-FILES SUPPLIED WITH THE CONTRACT DOCUMENTS. SHOP DRAWINGS WILL BE AVAILABLE TO THE CONTRACTOR BY CONTACTING THE OFFICE OF CONTRACTS HIGHWAY DIVISION - IOWA DOT - AMES. DIMENSIONS SHOWN ON THESE PLANS ARE BASED ON DESIGN PLANS (ORIGINAL DESIGN NO. _____).

Use this note on all repair work and widening or remodeling involving existing structural steel.

E101: Existing structure, field verify dimensions

ALL ALIGNMENT, STATIONING, CONNECTING DIMENSIONS, AND ELEVATIONS USED IN THE NEW DETAILS IN THESE PLANS WERE DEVELOPED BASED ON THE EXISTING BRIDGE PLANS (include AND FIELD SURVEY when applicable). THE BRIDGE CONTRACTOR SHALL FIELD VERIFY THESE DETAILS BEFORE STARTING CONSTRUCTION.

This note shall be used on all widening projects, deck replacement projects and major repair projects. At a minimum, field survey should have been requested or should have been available for use in the design of bridge widening and bridge deck replacement projects.

E102: Existing structure, faint lines

FAINT LINES ON PLANS INDICATE THE EXISTING STRUCTURE.

E103A: Utility notification, rural

UTILITY COMPANIES WHOSE FACILITIES ARE SHOWN ON THE PLANS OR KNOWN TO BE WITHIN THE CONSTRUCTION LIMITS SHALL BE NOTIFIED BY THE BRIDGE CONTRACTOR OF THE STARTING DATE.

Use this note for bridge projects in rural areas.

E103B: Utility notification, urban

THE CITY AND UTILITY COMPANIES WHOSE FACILITIES ARE SHOWN ON THE PLANS OR KNOWN TO BE WITHIN THE CONSTRUCTION LIMITS SHALL BE NOTIFIED BY THE BRIDGE CONTRACTOR OF THE CONSTRUCTION STARTING DATE.

Use this note for bridge projects in urban areas.

E104A: Live load, HS20-44

THIS BRIDGE IS DESIGNED FOR HS20-44 LOADING, PLUS 20 LBS. PER SQUARE FOOT OF ROADWAY FOR FUTURE WEARING SURFACE.

Use this note for the design live load requirement for all new bridges on primary highways, excluding interstates. For interstate bridges use the note that includes alternate military load [E104B].

E104B: Live load, HS20-44 plus alternate military

THIS BRIDGE IS DESIGNED FOR HS20-44 + ALTERNATE MILITARY LOADING, PLUS 20 LBS. PER SQUARE FOOT OF ROADWAY FOR FUTURE WEARING SURFACE.

Use this note for the design live load requirement for all new bridges on interstates.

E104D: Live load, HL-93 bridge

THIS BRIDGE IS DESIGNED FOR HL-93 LOADING, PLUS 20 LBS. PER SQUARE FOOT OF ROADWAY FOR FUTURE WEARING SURFACE.

Use this note for the design live load requirement for all new bridges on primary highways, where both the superstructure and substructure are designed using LRFD.

E105A: Guardrail, placed by others, separate contracts

GUARDRAIL IS TO BE PLACED BY OTHERS.

Verify whether guardrail work is a part of the bridge contract or another contract.

On jobs where road and bridge plans are combined do not reference work shown in the plans to be done "by others". On combined plans there are no "others" and no general note is necessary.

If guardrail is included in a “tied” road project in the same letting, note E105B shall be used.

E105B: Guardrail, included in tied projects

GUARDRAIL WILL NOT BE INSTALLED IN THIS PROJECT, BUT IT WILL BE INSTALLED IN ANOTHER TIED PROJECT ASSOCIATED WITH THIS CONTRACT.

Verify whether guardrail work is a part of the bridge project or the “tied” project in the same letting. If the guardrail is in the “tied” project, include this note in the general notes of the bridge plans.

If guardrail will be included in the road sheets of the bridge project, no note is necessary.

E108: Railroad overpass, coordination

THE BRIDGE CONTRACTOR SHALL WORK IN SUCH A MANNER THAT EQUIPMENT AND MATERIALS SHALL NOT BE ALLOWED TO INTERFERE WITH TRAIN TRAFFIC OR BE ALLOWED TO FALL ON THE RAILROAD TRACKS. INTERFERENCE ABOVE THE RAILROAD TRACK AREA SHALL BE COORDINATED WITH THE RAILROAD.

E110: Bridge deck, dimension table

BRIDGE DECK DIMENSIONS TABLE			
ITEM		UNITS	QUANTITY
1	DECK LENGTH	L.F.	
2	MINIMUM DECK WIDTH	L.F.	
3	MAXIMUM DECK WIDTH	L.F.	
4	DECK AREA	S.F.	

1. DECK LENGTH IS MEASURED FROM FACE-TO-FACE OF PAVING NOTCHES ALONG THE CENTERLINE OF THE ROADWAY.
2, 3. DECK WIDTHS ARE MEASURED FROM OUT-TO-OUT OF DECK PERPENDICULAR TO THE CENTERLINE OF ROADWAY.
4. DECK AREA IS TO BE BASED ON THE FACE-TO-FACE PAVING NOTCH DISTANCE AND OUT-TO-OUT DECK DIMENSIONS.

Lengths should be to the nearest 0.1 of a foot, and areas should be to the nearest 1 ft^2. E110 is only necessary on new and replacement bridges.

E120: Traffic control, road closed

THE ROAD WILL BE CLOSED TO TRAFFIC DURING CONSTRUCTION. SEE TRAFFIC CONTROL PLAN NOTE ON DESIGN SHEET x.

Always relate traffic notes to the traffic control plan note.

E121: Traffic control, road open

THE ROAD WILL BE OPEN TO TRAFFIC DURING CONSTRUCTION. SEE TRAFFIC CONTROL PLAN NOTE ON DESIGN SHEET x.

Always relate traffic notes to the traffic control plan note.

E130: Removal of existing structure, partial

"REMOVALS AS PER PLAN" INCLUDE ALL COSTS ASSOCIATED WITH REMOVING THE_____.
REMOVALS SHALL BE IN ACCORDANCE WITH SECTION 2401, OF THE STANDARD SPECIFICATIONS. ANY DAMAGE TO OTHER PORTIONS OF THE EXISTING STRUCTURE NOT NOTED FOR REMOVAL SHALL BE THE RESPONSIBILITY OF THE BRIDGE CONTRACTOR AND SHALL BE REPAIRED AT NO EXTRA COST TO THE STATE.

Use this note where partial removal of a structure is required. Refer to the instructions for E131 for comments concerning salvage of material. Include scrape test note if painted steel items are involved in the removal.

E131: Removal of existing structure, bridge

THIS DESIGN IS FOR THE REPLACEMENT OF THE EXISTING (describe) DESIGN NO. _____ WITH A YEAR OF CONSTRUCTION OF _____. ELECTRONIC PLANS OF THE EXISTING STRUCTURE ARE AVAILABLE TO THE CONTRACTOR AS PART OF THE E-FILES SUPPLIED WITH THE CONTRACT DOCUMENTS.

THE LUMP SUM BID FOR "REMOVAL OF EXISTING BRIDGE" SHALL INCLUDE (describe bridge & any special removal limits).

REMOVALS SHALL BE IN ACCORDANCE WITH SECTION 2401, OF THE STANDARD SPECIFICATIONS.

This note is to be used on bridge replacement projects. Describe the existing structure and any removal limits that are different from what is specified in the Standard Specifications. Include scrape test note if painted steel items are involved in the removal.

When structural steel is to be removed as part of a federal aid project (this includes removal of the complete bridge or a portion of the bridge such as a bridge rail) normally the steel is given to the contractor [IDOT SS 2401.01]. In this case, FHWA will participate in the cost of the removal.

Occasionally the steel removed will be retained by the state or given to the county. The Standard Specifications state the contractor is required to stockpile this material at the site [IDOT SS 2401.03, E]. In this case the FHWA will participate in the cost of removal. The stockpiling at the site will be included in the removal item. The plan shall indicate which steel is to remain property of the contracting authority. In the event the county would like the contractor to assist them in loading the material onto county vehicles or hauling the material to another site for storage, they are expected to negotiate these items separately with the contractor. These items shall not be mentioned on the plan. If the state would like the contractor to assist them in loading the material onto state vehicles or hauling the material to another site for storage, the items should be bid separately (hauling and storing structural steel). This item will be considered as non-participating and so noted in the estimate reference information on the plans.

The FHWA requires the salvaged material removed using a federal participation removal item must be reused on projects eligible for federal aid funds. We will assume this will be the case unless we have knowledge to the contrary. If the salvage material will not be reused on a project eligible for federal aid, the FHWA will be reimbursed for the salvage value of the material.

In accordance with 2401.03A, the contractor is required to notify the DNR prior to starting bridge demolition. The notification form will require “year of construction” as an entry on

the form. This information will be required for all contracts which include the “Removal of existing bridge” item. As per 2401.03 A 3 any asbestos found during inspection is assumed to be removed prior to award of this contract. Typically this will be done by a separate contract initiated by the Location and Environment Bureau (LEB). If the asbestos removal cannot be accomplished prior to award of the bridge contract due to accessibility issues, the asbestos removal must be addressed by the bridge contractor. If asbestos removal must be accomplished as part of the bridge removal process, the designer shall include an asbestos removal note (E485) and appropriate bid item.

E132: Removal of existing structure, miscellaneous

THE BID ITEM "REMOVALS AS PER PLAN" SHALL INCLUDE ALL COSTS ASSOCIATED WITH REMOVING THE _____. REMOVALS SHALL BE IN ACCORDANCE WITH SECTION 2401, OF THE STANDARD SPECIFICATIONS.

Use this note when the removals involve miscellaneous items (retaining walls, pipes, etc.)

E133: Removal of existing structure, feather edging

THE BRIDGE CONTRACTOR IS TO PROVIDE A METHOD OF REMOVAL THAT WILL PREVENT FEATHER EDGING AT THE BOTTOM OF THE EXISTING SLAB. CARE SHALL BE TAKEN WHEN EXPOSING EXISTING REINFORCING SO THE BOND TO EXISTING CONCRETE IS NOT BROKEN AT THE CONCRETE BREAK LINES.

Use this note for bridge widening, beam replacements, or other projects where a portion of the slab is to be removed.

E140: Excavation, channel by bridge contractor, approximate limits

THE BRIDGE CONTRACTOR IS TO CLEAR AND/OR SHAPE THE CHANNEL WITHIN THE APPROXIMATE LIMITS OF THE AREAS AS SHOWN ON THE "SITUATION PLAN" AND "LONGITUDINAL SECTION ALONG CENTERLINE ROADWAY" ON DESIGN SHEET x.

This note is to be used when the bridge contractor completes all channel excavation. Show limits on the plan details.

If road and bridge work are combined in a single contract, all channel excavation should be included with road quantities.

E141: Excavation, channel by others, separate contracts

WHEN CHANNEL EXCAVATION IS DONE BY OTHERS, THE "CLASS 10 CHANNEL EXCAVATION" BID ITEM WILL BE DELETED FROM THE BRIDGE CONTRACT. NO PAYMENT WILL BE MADE FOR WORK DELETED.

On jobs where road and bridge plans are combined, do not reference work shown in the plans to be done "by others". On combined plans there are no "others". For those cases this note should not be used.

Often, there is a quantity for a pay item on the bridge plans for Class 10 channel excavation for that amount of earth to be removed from the stream channel under the bridge. The grading plans on a separately contracted project may also have an item for Class 10 channel excavation which includes that amount to be excavated under the bridge.

This has caused problems on several projects in the past. Some bridge contractors have then asked for partial payment for the item of channel excavation even though they have not been required to do the work. They claim that a portion of their fixed overhead cost was included in this item and deletion of the item denies them recovery of that fixed cost.

If there is uncertainty on whether the class 10 excavation is completed in the separate grading contract, then this note shall be used.

E142A: Excavation, channel not in contract, shape berms

THE CHANNEL EXCAVATION AS SHOWN IS NOT A PART OF THIS CONTRACT, BUT SHALL BE COMPLETED BEFORE ABUTMENT PILES ARE DRIVEN. THE BRIDGE CONTRACTOR IS TO LEVEL OFF AND SHAPE THE BERMS TO THE ELEVATIONS AND DIMENSIONS SHOWN. DRESSING OF SLOPES OUTSIDE THE BRIDGE AREA NOT DISTURBED BY THE BRIDGE CONTRACTOR SHALL BE PAID FOR AS EXTRA WORK.

Use this note when the Design Bureau has agreed to place channel excavation on road plans of another project with a separate contract prior to the bridge project.

Bridge plans generally include a note requiring the contractor to "level off and shape the berms to the elevations and dimensions shown." On large fills, the bridge contractor is often required to do extensive shaping and dressing of the slopes because the grading contractor did not properly shape them. To fix the responsibility for the various items of work upon the proper contractor, please use this note.

E142B: Excavation, channel tied contracts, shape berms

THE CHANNEL EXCAVATION IS NOT A PART OF THIS PROJECT, BUT IT WILL BE INCLUDED IN ANOTHER TIED PROJECT ASSOCIATED WITH THIS CONTRACT. THE CHANNEL EXCAVATION AS SHOWN SHALL BE COMPLETED BEFORE ABUTMENT PILES ARE DRIVEN.

Use this note when the Design Bureau has agreed to place all channel excavation on the tied road plans.

E143A: Excavation, roadway by others, separate contract

ROADWAY EXCAVATION IS TO BE DONE BY OTHERS AND IS NOT A PART OF THIS CONTRACT. EXCAVATION QUANTITIES FOR THE PIERS ARE BASED ON THE ASSUMPTION THAT ROADWAY EXCAVATION WILL HAVE BEEN COMPLETED AND ABUTMENT FILLS ARE IN PLACE PRIOR TO STARTING CONSTRUCTION OF THE PIERS.

Use this note for an overhead structure when roadway excavation is required to establish a grade or ditches on the road below, but the roadway plan is let in a separate contract. Coordinate with the Design Bureau.

On jobs where road and bridge plans are combined, do not reference work shown in the plans to be done "by others". On combined plans there are no "others". In this case, no plan note is necessary.

If the roadway excavation is in a “tied” project in the same letting, note E143B shall be used.

E143B: Excavation, roadway, tied project

ROADWAY EXCAVATION WILL NOT BE A PART OF THE PROJECT, BUT IT WILL BE INCLUDED IN A TIED PROJECT ASSOCIATED WITH THIS CONTRACT. EXCAVATION QUANTITIES FOR THE PIERS ARE BASED ON THE ASSUMPTION THAT ROADWAY EXCAVATION WILL HAVE BEEN COMPLETED AND ABUTMENT FILLS ARE IN PLACE PRIOR TO STARTING CONSTRUCTION OF THE PIERS.

Use this note for an overhead structure when roadway excavation is required to establish a grade or ditches on the road below, but the roadway plan is placed in a tied project. Coordinate with the Design Bureau.

E144: Excavation, sites for excess material

IT SHALL BE THE BRIDGE CONTRACTOR'S RESPONSIBILITY TO PROVIDE SITES FOR EXCESS EXCAVATED MATERIAL. NO PAYMENT FOR OVERHAUL WILL BE ALLOWED FOR MATERIAL HAULED TO THESE SITES.

Use this note on all plans that have excavation (Class 10 Channel, Class 20, 21, and 22) unless we provide an overhaul bid item.

If a significant amount of excess excavated material is involved and a separate road contractor is at the site, this material may need to be stockpiled. Check with the Design Bureau.

E145: Excavation, Class 20 assumption

CLASS 20 EXCAVATION QUANTITIES ARE BASED ON THE ASSUMPTION THAT THE CHANNEL EXCAVATION IS COMPLETED PRIOR TO STARTING CONSTRUCTION OF THE ABUTMENTS AND PIERS.

Do not use this note if channel excavation is part of the bridge plan. Assume the contractor will be paid for Class 10 down to noted elevation and Class 20 below noted elevation. See the Standard Specifications [IDOT SS 2402.04, A]. If channel excavation is by others, include this note. This assumes Class 10 has been completed prior to this contract. If not the contractor will be paid for additional Class 20 excavation.

E170: Earth retention, behind abutments

THE BRIDGE CONTRACTOR IS TO RETAIN EARTH AND/OR GRANULAR MATERIAL BEHIND THE PORTION OF ABUTMENTS SUBJECTED TO TRAFFIC DURING WIDENING BY METHODS APPROVED BY THE ENGINEER. ALL COSTS FOR RETAINING THE EARTH AND/OR GRANULAR MATERIAL SHALL BE INCLUDED IN THE PRICE BID FOR "CLASS 20 EXCAVATION".

Use this note for widening projects or stage construction projects when appropriate.

E171: Earth retention, temporary shoring

THE CONTRACTOR SHALL PROVIDE TEMPORARY SHORING (SHEET PILE OR OTHER) TO PREVENT THE EARTH UNDER THE TRAFFIC LANE, FROM SLOUGHING IN DURING CONSTRUCTION. ALL COST OF SHORING, WILL BE CONSIDERED INCIDENTAL TO CONSTRUCTION AND NO DIRECT PAYMENT WILL BE MADE. ALL MATERIAL USED FOR SHORING SHALL REMAIN THE PROPERTY OF THE CONTRACTOR. SHORING IS TO BE REMOVED ONLY AFTER BACKFILLING HAS BEEN COMPLETED. THE CONTRACTOR SHALL SUBMIT SHORING PLANS FOR REVIEW. IN ADDITION TO THE REQUIREMENTS NOTED ABOVE, ARTICLE 1107.07 OF THE STANDARD SPECIFICATIONS STILL APPLIES.

Use this note when excavation in Zone 2 is required. (See the commentary for information on Zone 2.)

Staged construction may require excavation very close to a traffic lane and temporary embankment support (shoring) may be necessary to safely maintain traffic. The plans shall require the Contractor to provide adequate shoring and the details shall be reviewed and approved by the Engineer.

This note will need to be modified to accommodate specific job situations such as type of structure, embankment location, etc.

For situations where traffic is shifted to the shoulders, consideration should be given to shoring or slope stability. The temporary slope of 1.5:1 for Zone 1 is limited to fill heights of less than 20 ft. unless a global stability analysis is performed.

E172: Earth retention, temporary shoring, PE required

TEMPORARY SHORING (SHEET PILE OR OTHER) SHALL BE REQUIRED AS NECESSARY TO PREVENT THE EARTH UNDER THE TRAFFIC LANE FROM SLOUGHING IN DURING CONSTRUCTION.

THE CONTRACTOR SHALL SUBMIT A TEMPORARY SHORING PLAN FOR REVIEW. THE TEMPORARY SHORING PLAN SHALL BE DESIGNED AND CERTIFIED BY A PROFESSIONAL ENGINEER LICENSED IN THE STATE OF IOWA. WHEN DETERMINING SLOPE STABILITY TO SUPPORT STRUCTURES SUCH AS BRIDGES, CULVERTS AND RETAINING WALLS, A GLOBAL STABILITY ANALYSIS SHALL BE INCLUDED IN THE DESIGN OF THE TEMPORARY SHORING IN ACCORDANCE WITH CHAPTER 200F-1 IN THE DESIGN MANUAL OF THE IOWA DOT, DESIGN BUREAU. THE CONTRACTOR SHALL NOT PROCEED WITH INSTALLATION OF THE TEMPORARY SHORING WITHOUT NOTICE TO PROCEED FROM THE ENGINEER.

THE TEMPORARY SHORING SUBMITTAL SHALL INCLUDE:

- DESIGN CALCULATIONS (INCLUDING A GLOBAL STABILITY ANALYSIS)
- SOIL PROPERTIES
- SHORING MATERIAL PROPERTIES
- SHORING PLAN LAYOUT (SHOWING LOCATION OF TRAFFIC)
- SHORING DETAILS

TEMPORARY SHORING SHALL BE PAID FOR AS A LUMP SUM INCLUDING ALL COST FOR DESIGNING, FURNISHING, INSTALLING AND REMOVAL. ALL MATERIAL USED FOR SHORING SHALL REMAIN THE PROPERTY OF THE CONTRACTOR. SHORING IS TO BE REMOVED ONLY AFTER BACKFILLING HAS BEEN COMPLETED. IN ADDITION TO THE REQUIREMENTS NOTED ABOVE, ARTICLE 1107.07 OF THE STANDARD SPECIFICATIONS STILL APPLIES.

Use this note when excavation is in Zone 3. (See the commentary for information on Zone 3.) Also, use the appropriate lump sum bid item for temporary shoring along with note E172.

2501-8400172	Temporary Shoring	LS	(English)

The contractor will be paid a lump sum contract price for temporary shoring. This payment shall be full compensation for all costs associated with designing, furnishing, installing and removing the temporary shoring.

Design and review of the temporary shoring is to be based on *AASHTO Guide Design Specification for Bridge Temporary Works* [BDM 13.1.5].

E175: Approach fills, driving piles, waiting period

ABUTMENT PILES SHALL NOT BE DRIVEN FOR A MINIMUM OF ?? DAYS FOLLOWING COMPLETION OF APPROACH FILLS. THE TIME PERIOD BETWEEN COMPLETION OF FILLS AND DRIVING PILES MAY BE CHANGED AS ORDERED BY THE ENGINEER BASED UPON REVIEW OF SETTLEMENT PLATES.

This note shall be used in situations where new berms are being constructed and settlement is an issue. The number of days used in the note will be based on recommendations from the Soils Section of the Design Bureau. Typical delay periods range from 90 to 180 days; however, longer or shorter periods are possible.

E181: Concrete sealer, bridge seats

CONCRETE SEALER IS TO BE APPLIED TO THE EXPOSED BRIDGE SEAT AND WASH SURFACES AT THE ABUTMENTS (and at piers?).

Preparation and payment for sealer is covered in the Standard Specifications [IDOT SS 2403.03, P, 3, and 2403.05, C]. For new construction, place concrete sealer on any abutment seat and wash surfaces. Include pier tops below a joint in the deck. For repairs, check with the supervising Section Leader to determine if concrete sealer should be placed.

E183A: Approach fills, not in same contract, shape berms

THE APPROACH FILLS AS SHOWN ARE NOT A PART OF THIS CONTRACT, BUT ARE TO BE IN PLACE BEFORE ABUTMENT PILES ARE DRIVEN. THE BRIDGE CONTRACTOR IS TO LEVEL OFF AND SHAPE THE BERMS TO THE ELEVATIONS AND DIMENSIONS SHOWN. DRESSING OF SLOPES OUTSIDE THE BRIDGE AREA NOT DISTURBED BY THE BRIDGE CONTRACTOR SHALL BE PAID FOR AS EXTRA WORK.

Use this note when road work and bridge work are on separate projects. Soil under the approach fill may contain compressible material and consolidation may occur. If this is the case, a delay note prior to driving piles may be required.

If a delay is required, the Soils Design Section will give its recommendations.

This note may be combined with E142A if channel excavation is also required.

If the approach fills are in a “tied” project in the same letting, note E183B shall be used.

E183B: Approach fills, tied projects, shape berms

THE APPROACH FILLS ARE NOT A PART OF THIS PROJECT, BUT IT WILL BE INCLUDED IN ANOTHER TIED PROJECT ASSOCIATED WITH THIS CONTRACT. THE APPROACH FILL AS SHOWN ARE TO BE IN PLACE BEFORE ABUTMENT PILES ARE DRIVEN.

Verify whether approach fill grading is a part of the bridge project or the “tied” grading project in the same letting. If the approach fill is in the “tied” project, include this note in the general notes of the bridge plans. If approach fills will be included in the road sheets of the bridge project, no note is necessary.

Soil under the approach fill may contain compressible material and consolidation may occur. If this is the case, a delay note prior to driving piles may be required.
If a delay is required, the Soils Design Section will give its recommendations.

This note may be combined with E142B if channel excavation is also required.

E184: Prebored holes, integral abutment piles

THE BRIDGE CONTRACTOR SHALL PREBORE HOLES FOR ABUTMENT PILES. HOLES SHALL BE BORED TO THE ELEVATIONS SHOWN ON THE "LONGITUDINAL SECTION ALONG CENTERLINE ROADWAY" ON DESIGN SHEET x. PILES SHALL BE DRIVEN THROUGH THE HOLES TO AT LEAST THE SPECIFIED DESIGN BEARING.

This note is to be used when prebored holes are required at the abutment. See integral abutment information elsewhere in the manual for where to use prebored holes [BDM 6.5.1.1.1].

Except for bridges with lengths 130 feet or less, the Bureau requires piles to be driven in prebored holes to (1) provide for lateral movement of the pile at integral abutments or (2)

eliminate drag load forces induced by settlement. The prebored hole voids are to be filled with natural bentonite slurry. The Bureau believes that the bentonite slurry will provide for good lateral movement of the piles at integral abutments. The Soils Design Section believes that the bentonite slurry is a good material for eliminating drag forces.

E185: Wing slopes, dress after bridge repair

THE BRIDGE CONTRACTOR SHALL DRESS UP THE SLOPES AROUND THE WINGS WHICH ARE DISTURBED DURING CONSTRUCTION. THIS WORK SHALL BE CONSIDERED INCIDENTAL AND NO EXTRA PAYMENT WILL BE MADE.

This note is to be used on repair projects that involve a wing area.

E186: Weathering steel, stain protection for substructure concrete

SUBSTRUCTURE CONCRETE SHALL BE PROTECTED FROM STAINING BY A WRAPPING OF POLYETHYLENE OR SIMILAR MATERIALS WHICH SHALL BE LEFT IN PLACE AND KEPT IN A SERVICEABLE CONDITION UNTIL AFTER THE DECK HAS BEEN PLACED. IF SUBSTRUCTURE CONCRETE IS STAINED, THE STAINS SHALL BE REMOVED BY METHODS APPROVED BY THE ENGINEER. ALL COSTS ASSOCIATED WITH THE PROTECTION AND ANY REQUIRED CLEANING OF THE SUBSTRUCTURE CONCRETE SHALL BE INCLUDED IN THE PRICE BID FOR "STRUCTURAL STEEL".

This note is to be used for weathering steel bridges only.

E187: Pile points, H-piles

CAST IN-ONE-PIECE STEEL PILE POINTS ARE REQUIRED FOR THE (designate which abutment or pier) PILES IN ACCORDANCE WITH ARTICLE 4167.02 OF THE CURRENT STANDARD SPECIFICATIONS AND MATERIALS IM 468.

E188: Concrete barrier rails, slipform method, concrete class

CONCRETE BARRIER RAILS PLACED USING THE SLIPFORM METHOD WILL REQUIRE THE USE OF A CLASS BR CONCRETE IN ACCORDANCE WITH ARTICLE 2513.03, A, 2, OF THE STANDARD SPECIFICATIONS. CAST-IN-PLACE BARRIER RAILS SHALL USE CLASS C MIX. CLASS D CONCRETE IS NOT PERMITTED FOR CONCRETE BARRIER RAILS (CAST-IN-PLACE OR SLIPFORMED METHOD).

Due to quality issues contractors no longer have the option of Class D concrete for placement of barrier rails by the slipform or cast-in-place method.

E189: Reinforcing, English designation on plans

THESE BRIDGE PLANS LABEL ALL REINFORCING STEEL WITH ENGLISH NOTATION (5a1 is 5/8 inch diameter bar). ENGLISH REINFORCING STEEL RECEIVED IN THE FIELD MAY DISPLAY THE FOLLOWING “BAR DESIGNATION”. THE “BAR DESIGNATION” IS THE STAMPED IMPRESSION ON THE REINFORCING BARS, AND IS EQUIVALENT TO THE BAR DIAMETER IN MILLIMETERS.

ENGLISH SIZE:	3	4	5	6	7	8	9	10	11
BAR DESIGNATION:	10	13	16	19	22	25	29	32	36

The table was revised to fit note sheets more efficiently.

E192: CCS falsework, staged construction

THIS BRIDGE WILL BE BUILT IN STAGES AND THE FALSEWORK FOR STAGE I CONSTRUCTION SHALL REMAIN IN PLACE UNTIL STAGE II IS COMPLETE. THE STAGE I FALSEWORK SHALL BE REMOVED WITH THE STAGE II FALSEWORK.

It is permissible to allow live load on the cured Stage I deck with the falsework in place. The falsework need not be designed to carry HL-93 loads. When falsework is to remain in place for more than one construction season consult with the Chief Structural Engineer about requiring the falsework to be designed for ice loads.

The note in the J-standards for CCS bridges already accounts for the possibility of staged construction.

E200: Precast concrete deck panels, option

AT THE OPTION OF THE BRIDGE CONTRACTOR, THE PRECAST PRESTRESSED CONCRETE DECK PANELS AS SHOWN ON DESIGN SHEET x MAY BE USED IN CONSTRUCTION OF THE BRIDGE DECK IN LIEU OF THE CONVENTIONAL DECK AS SHOWN ON DESIGN SHEET x.

This note to be used when precast concrete deck panels are permissible. See prestressed deck panels criteria [BDM 5.2.4.3] to determine if these panels are appropriate. See the Standard Specifications for basis of payment [IDOT SS 2425.05].

E201: Pretensioned prestressed concrete beams, nonstandard

NON-STANDARD BEAMS WITH HIGHER THAN USUAL CONCRETE STRENGTHS ARE REQUIRED FOR THIS BRIDGE. ADDITIONAL STRANDS ARE ALSO REQUIRED.

Use this note when wider beam spacings are used and the design requires higher concrete strengths and additional strands for some or all of the beams.

E202: Prestressed concrete beam bridge, temporary bracing

THE CONTRACTOR SHALL BE RESPONSIBLE FOR ENSURING STABILITY OF PRESTRESSED CONCRETE BEAMS DURING ERECTION AND CONSTRUCTION UP THROUGH THE CONCRETE BRIDGE DECK REACHING ITS FULL 28-DAY STRENGTH. THE CONTRACTOR SHALL PROVIDE SUFFICIENT TEMPORARY ANCHOR BRACING AT BEAM ENDS AND TEMPORARY INTERMEDIATE BRACING AS NEEDED TO ENSURE PRESTRESSED BEAM STABILITY. PARTIALLY OR FULLY INSTALLED PERMANENT BRACING AS SHOWN IN THESE DESIGN PLANS SHALL NOT BE ASSUMED SUFFICIENT TO BRACE PRESTRESSED BEAMS DURING ERECTION AND CONSTRUCTION. TEMPORARY BRACING SHALL NOT BE WELDED TO PRESTRESSED BEAM STIRRUPS.

Include this plan note in the General Notes for all new PPCB bridges and projects involving deck replacements.

E204: Steel beams, temporary bracing

THE CONTRACTOR IS RESPONSIBLE TO PROVIDE SUFFICIENT TEMPORARY BRACING TO MINIMIZE LATERAL DEFLECTION AND ROTATION OF EXTERIOR STEEL BEAMS DURING DECK PLACEMENT. LATERAL DEFLECTION AND ROTATION OF EXTERIOR BEAMS MAY RESULT IN THIN DECKS AND AN UPWARDS SHIFT IN BAR MATS WHICH CAN DECREASE CONCRETE COVER. PARTIALLY OR FULLY INSTALLED PERMANENT BRACING AS SHOWN IN THESE DESIGN PLANS SHALL NOT BE ASSUMED SUFFICIENT TO MINIMIZE LATERAL DEFLECTION AND ROTATION OF EXTERIOR BEAMS DURING DECK PLACEMENT. TEMPORARY BRACING SHALL NOT BE WELDED TO THE STEEL BEAMS OR ITS ATTACHMENTS INCLUDING THE STUDS.

Include this plan note in the General Notes for all new steel beam bridges and projects involving deck replacement.

E205: Longitudinal grooving, paving by others

LONGITUDINAL GROOVING WILL NOT BE A PART OF THIS CONTRACT, BUT WILL BE DONE BY OTHERS PRIOR TO OPENING THE BRIDGE TO TRAFFIC.

When bridge decks (and bridge approaches) are a separate contract, but will be followed by a paving contract responsible for opening the road to traffic, the designer shall calculate the quantity of longitudinal grooving necessary for the bridge deck for inclusion in the paving plan. This quantity shall be forwarded to the Design Bureau for their use in developing quantities for the paving project. Remind the Design Bureau that our quantity is only for the bridge deck, and they will need to calculate the quantity for the approach sections.

E206: Longitudinal grooving, is in a tied project

LONGITUDINAL GROOVING WILL NOT BE A PART OF THIS PROJECT, BUT WILL BE INCLUDED IN ANOTHER PROJECT ASSOCIATED WITH THIS CONTRACT.

Prior to using this note, the designer shall verify with the Contracts and Specifications Bureau that the projects will be tied.

E213: Paint, weathering steel, new bridge

THIS STRUCTURE SHALL BE BUILT WITH WEATHERING STEEL. ALL STRUCTURAL STEEL, EXCEPT AS NOTED, SHALL CONFORM TO ASTM A709 GRADE 50W. PAINTING REQUIREMENTS FOR THIS STRUCTURE SHALL BE IN ACCORDANCE WITH ARTICLE 2408.02, Q, OF THE STANDARD SPECIFICATIONS.

Use this note in the general notes for all new structures using weathering steel. A number of other notes particular to weathering steel bridges are required. See E930.

E214: Paint, non-weathering steel, new bridge

PAINTING REQUIREMENTS FOR THIS STRUCTURE SHALL BE IN ACCORDANCE WITH ARTICLE 2408.02, Q, OF THE STANDARD SPECIFICATIONS.

Use this note on any new steel structure, which cannot use weathering steel. The Standard Specifications require shop applied inorganic zinc silicate paint. The specifications do allow the use of the topcoat to be optional. If the topcoat is to be used, then the location (example exterior face of exterior beam) must be specified in the plans.

E233: Nuclear density checks, deck test wells

TWO COURSE DECKS USING LOW SLUMP OVERLAY MIXES WILL REQUIRE TEST WELLS BE CAST IN THE FIRST CONCRETE DECK COURSE. TEST WELLS SHALL BE LOCATED AS NOTED IN MATERIALS IM 204, APPENDIX M.

PRIOR TO DECK PLACEMENT THE CONTRACTOR SHALL SUBMIT A TEST WELL LOCATION PLAN TO THE ENGINEER FOR APPROVAL. THE PLAN SHALL SHOW THE PROPOSED EXTENT OF EACH SECOND STAGE PLACEMENT AND PROPOSED TEST WELL LOCATIONS. ALL COSTS ASSOCIATED WITH CONSTRUCTING THE TEST WELLS SHALL BE CONSIDERED INCIDENTAL TO STRUCTURAL CONCRETE BRIDGE OR HIGH PERFORMANCE STRUCTURAL CONCRETE ?????.

On some bridges a two-course bridge deck may be specified. This note is required when the second course is a low slump concrete overlay. Testing is not required if a high performance overlay is used. The top course usually will not be thick enough to accommodate the probe of a nuclear density gauge designed to determine the in-place density of plastic concrete. The probe is somewhat longer than 2 inches in length. Therefore, design plans should have this note. Cost shall be incidental to Structural

Concrete, Bridge or High Performance Structural Concrete depending on the concrete specified to be used for the bridge deck.

E234: Bridge deck, two-course, surface preparation

NO CURING COMPOUNDS SHALL BE USED ON THE SURFACE OF THE CONCRETE DECK (FIRST COURSE).

THE SURFACE OF THE FIRST COURSE SHALL BE INTENTIONALLY ROUGHENED (COMBED) TO A MINIMUM DEPTH OF 1/8” AND A MAXIMUM DEPTH OF 1/4”. THIS ROUGHENED SURFACE SHALL BE ACCOMPLISHED ON PLASTIC CONCRETE BY USE OF A MECHANICAL DEVICE AS PRESCRIBED IN ARTICLE 2301.03, H, OF THE STANDARD SPECIFICATIONS OR ON HARDENED CONCRETE BY UNIFORMLY SCARIFYING THE ENTIRE DECK AREA. THE INTENT IS TO GIVE THE CONTRACTOR THE OPTION OF ACHIEVING THE REQUIRED SURFACE ROUGHNESS ON THE PLASTIC OR HARDENED CONCRETE SO THE SECOND COURSE WILL BOND PROPERLY.

This note replaces E923 and should be used with two course decks for new bridges. Curing compounds should not be allowed, so the second course will bond properly.

E235: Transparent Stay-In-Place Deck Forms, Contractor’s Option

AT THE CONTRACTORS OPTION, A TRANSPARENT STAY-IN-PLACE DECK FORMING SYSTEM MAY BE PROPOSED FOR THIS PROJECT. THE STAY-IN-PLACE FORMS SHALL HAVE A MINIMUM AVERAGE TRANSPARENCY OF 70% TO ALLOW FOR CLEAR INSPECTION OF THE DECK UNDERSIDE. THE SYSTEM SHALL BE CONSTRUCTED OF DURABLE MATERIAL WITH SUPPORTING MEMBERS CONSTRUCTED FROM CORROSION PROTECTED STEEL. THE FORMING SYSTEM, INCLUDING ANY ADDITIONAL CONCRETE REQUIRED, SHALL NOT ADD MORE THAN A MAXIMUM UNIT WEIGHT OF 3.5 PSF OVER THE FULL FORM PANEL AREA. AT A MINIMUM, THE FORMING SYSTEM SHALL BE DESIGNED FOR LOADS IN ACCORDANCE WITH ARTICLE 2403.03, L, 4, OF THE STANDARD SPECIFICATIONS. SHOP DRAWINGS AND CALCULATIONS SHALL BE SUBMITTED FOR THE ENGINEER’S REVIEW. THE TRANSPARENT STAY-IN-PLACE FORM MATERIAL AND INSTALLATION COST SHALL BE INCLUDED IN THE PAY ITEM FOR STRUCTURAL CONCRETE (BRIDGE), WITH NO ADDITIONAL COST TO THE STATE.

This note to be used when transparent stay-in-place deck forms are permissible. See transparent stay-in-place deck form criteria [BDM 5.2.4.5] to determine if these panels are appropriate. The transparent stay-in-place form material and installation cost shall be included in the pay item for Structural Concrete (Bridge), with no additional cost to the State.

13.4 Future notes

13.4.1 Index

Reserved

13.4.2 Listing

Reserved

13.5 Bridge repair

These notes are placed on the general notes sheet, on the situation plan and quantities sheet, and on specific detail sheets.

13.5.1 Index

Approach pavement
- New PCC E450
- PCC overlay E451

Asbestos removal
- Location and areas E485

Backwall repair
- Class C concrete E461
- Earth support, stage construction E462

Concrete sealer
- Abutment seats E438
- Barrier rail E463

Curb repair
- Concrete notes E431

Existing structure
- Faint lines E436
- Field verify dimensions E434
- Field verify dimensions, steel E435

Deck replacement
- Railroad overpass coordination E417

Deck survey
- Manual or automated sounding plot E400A
- No plot, HMA surfacing or PCC overlay present E400B
- Manual or automated sounding with no plot E400C

Deck surfacing, repair, and overlay
- Beam bridge E410A
- HPC-O concrete curing E415
- Re-overlay E412
- Re-overlay, beam bridge E410D
- Re-overlay, slab bridge E410E
- Shallow reinforcing (rare) E410C
- Slab bridge E410B
- Slab bridge, no top reinforcing E411

Heavy construction equipment
- Bridge protection during beam replacement E445
- Bridge protection during overlays and re-overlays E447

Keyways
- Dimensions and bevel E443

Overlay construction joint
- Temporary barrier rail conflict E432A
- Sandblasting E432B

Paint
- Bearing repainting, concrete bridge E473
- Complete repainting, steel bridge E472B
- Containment and disposal E474
- Minor part repainting, steel bridge E472A
- Raise plate on expansion device E470
- Strengthening angles, steel bridge E472C
- Strip seal on sliding plate E471

Reinforcing
- Minimum clearances E437

Removal
- Handrail, property of contractor E441A
- Handrail, property of Iowa DOT E441B

HMA overlay E442
Scheduled items E440
Repair project
General outline of work E430
Retrofit barrier rail
Existing conduit E490
Scrape test
Lead and chromium ppm E480
Bridge demolition, hazardous levels of lead and chromium E481
Stage construction
Construction options, rebuilding a backwall E422
Maintain traffic E420
Reverse stages option E421
Superstructure raise
Vertical tolerance and horizontal support E429
Surface raise
Restriction E433

13.5.2 Listing

E400A: Deck survey, manual or automated sounding plot

PLAN QUANTITY OF DECK REPAIR IS BASED ON THE "SURVEY PLOT" AS SHOWN IN THESE PLANS. HATCHED PORTIONS REPRESENT CLASS A BRIDGE DECK REPAIR. CROSS HATCHED PORTIONS, IF SHOWN, REPRESENT CLASS B BRIDGE DECK REPAIR. THE PLAN QUANTITY FOR “CLASS A DECK REPAIR” IS ESTIMATED AS _____ SY BASED ON _____ SOUNDING OF THE DECK PLUS 25% INCREASE FOR ESTIMATING PURPOSES. ACTUAL SPALLED AND HOLLOW AREAS AS DETERMINED BY THE ENGINEER AT THE TIME OF CONSTRUCTION SHALL BE REPAIRED.

This note is typically used when the deck soundings have been done by manual or automation and includes a plot. The 25% increase is based on past experience. Fill in total SY and indicate if “MANUAL” or “AUTOMATED” sounding was used.

E400B: Deck survey, no plot, HMA surfacing or PCC overlay present

NO PRELIMINARY DECK SURVEY IS SHOWN. THE PLAN QUANTITY FOR "CLASS A BRIDGE DECK REPAIR" IS ESTIMATED AS ___ OF THE TOTAL DECK AREA. THE ACTUAL QUANTITY IS DETERMINED BY THE ENGINEER AFTER THE ___ HAS BEEN REMOVED. ACTUAL SPALLED AND HOLLOW AREAS AS DETERMINED BY THE ENGINEER SHALL BE REPAIRED.

This note is used when there is HMA surfacing or a PCC overlay already on the deck. In these cases deck soundings are not reliable.

1. For HMA surfacing fill in 100% of deck area for shorter bridges and 50% of deck area for longer bridges. For PCC overlays already on the deck fill in 20% of deck area. Consult with the supervising Section Leader on percentage to use.
2. Fill in H.M.A. SURFACING or P.C.C. OVERLAY as applicable.

E400C: Deck survey, manual or automated sounding with no plot

NO PRELIMINARY DECK SURVEY IS SHOWN. THE PLAN QUANTITY FOR “CLASS A DECK REPAIR” IS ESTIMATED AS _____ SY BASED ON _____ SOUNDING OF THE DECK PLUS 25% INCREASE FOR ESTIMATING PURPOSES. THE ACTUAL QUANTITY IS DETERMINED BY THE ENGINEER AT THE TIME OF REPAIR. ACTUAL SPALLED AND HOLLOW AREAS AS DETERMINED BY THE ENGINEER SHALL BE REPAIRED.

This note is typically used when there is no plot. In most cases this will occur when the District needs to manually sound the deck, but is not able to prepare a plot. The 25% increase is based on past experience. Fill in total SY and indicate if “MANUAL” or “AUTOMATED” sounding was used.

E410A: Deck surfacing, repair, and overlay, beam bridge

PRESENT DECK THICKNESS IS ABOUT _____ INCHES. THE CONTRACTOR SHALL EXERCISE CARE IN REMOVING CONCRETE IN ORDER TO PREVENT UNNECESSARY UNBONDING OF REINFORCING STEEL.

This note is typically used on beam type bridges.

E410B: Deck surfacing, repair, and overlay, slab bridge

PRESENT DECK THICKNESS IS ABOUT _____ INCHES. THE CONTRACTOR SHALL EXERCISE CARE IN ORDER TO PREVENT UNNECESSARY REMOVAL OF CONCRETE BELOW THE TOP OF THE TOP REINFORCING. THE ENERGY OF HAND TOOLS SHALL BE RESTRICTED NEAR THE BOTTOM OF THE DESIGNATED CLASS A REPAIR AREAS IN ORDER TO PREVENT UNBONDING OF REINFORCING. NO CONCRETE SHALL BE REMOVED BELOW THE TOP OF THE TOP LONGITUDINAL REINFORCING WITHOUT PRIOR PERMISSION FROM THE BRIDGE ENGINEER.

This note is used on bridge superstructures where the main reinforcing is parallel with the roadway such as a concrete slab bridge.

E410C: Deck surfacing, repair, and overlay, shallow reinforcing (rare)

PRESENT DECK THICKNESS IS ABOUT _____ INCHES. THE DECK REINFORCING IS QUITE SHALLOW FOR A PORTION OF THE DECK AREA. IN THOSE AREAS WHERE REINFORCING IS LESS THEN 1/4 " CLEAR BELOW THE ORIGINAL FINISHED SURFACE, THE BOTTOM LIMIT OF BRIDGE DECK OVERLAY WILL BE CONSIDERED AS THE TOP OF THE TOP REINFORCING. UNSOUND CONCRETE BELOW THE TOP OF THE TOP REINFORCING SHALL BE REPAIRED AS CLASS A BRIDGE DECK REPAIR. THE CONTRACTOR WILL BE REQUIRED TO CAREFULLY REGULATE SCARIFYING DEPTH AND EMPLOY HAND METHODS AS NECESSARY IN ORDER TO PREVENT DAMAGE OR UNBONDING OF REINFORCING.

This note is only used if there is very little cover over top reinforcing, which should be quite infrequent.

E410D: Deck surfacing, repair, and overlay, re-overlay beam bridge

PRESENT DECK THICKNESS IS ABOUT _____ INCHES, INCLUDING EXISTING OVERLAY. THE CONTRACTOR SHALL EXERCISE CARE IN REMOVING CONCRETE IN ORDER TO PREVENT UNNECESSARY UNBONDING OF REINFORCING STEEL.

E410E: Deck surfacing, repair, and overlay, re-overlay slab bridge

PRESENT DECK THICKNESS IS ABOUT _____ INCHES, INCLUDING EXISTING OVERLAY. THE CONTRACTOR SHALL EXERCISE CARE IN ORDER TO PREVENT UNNECESSARY REMOVAL OF CONCRETE BELOW THE TOP OF THE TOP REINFORCING. THE ENERGY OF HAND TOOLS SHALL BE RESTRICTED NEAR THE BOTTOM OF THE DESIGNATED CLASS A REPAIR AREAS IN ORDER TO PREVENT UNBONDING OF REINFORCING. NO CONCRETE SHALL BE REMOVED BELOW THE TOP OF THE TOP LONGITUDINAL REINFORCING WITHOUT PRIOR PERMISSION FROM THE BRIDGE ENGINEER.

E411: Deck surfacing, repair, and overlay, slab bridge, no top reinforcing

THE MINIMUM DEPTH FOR CLASS A REPAIR IS TO BE 1 1/2 INCHES IN AREAS WHERE TOP REINFORCING IS NOT PRESENT.

This note is used when a slab bridge does not have top steel for some or all of the slab.

E412: Deck surfacing, repair, and overlay, re-overlay

THE BRIDGE DECK IS COVERED WITH A _____ INCH THICK PORTLAND CEMENT CONCRETE OVERLAY. THE CONTRACTOR SHALL NOTE THE REDEFINING OF THE CLASSIFICATION LINE (BOUNDARY BETWEEN REPAIR AND OVERLAY) FOR THIS PROJECT DUE TO THE EXISTING _____ INCH OVERLAY. THE CLASSIFICATION LINE WILL BE DEFINED AS _____ INCHES BELOW THE TOP OF EXISTING OVERLAY. THIS WILL NECESSITATE THE REMOVAL OF THE EXISTING BRIDGE DECK OVERLAY BEFORE PLACING THE PROPOSED NEW BRIDGE DECK OVERLAY.

THE BRIDGE DECK MAY HAVE BEEN EPOXY-INJECTED. THE CONTRACTOR SHALL REMOVE ALL EXPOSED EPOXY. REMOVAL OF EPOXY IS INCIDENTAL TO "REMOVAL OF EXISTING P.C.C. OVERLAY" AND "DECK REPAIR, CLASS A" AS APPROPRIATE.

ALL COSTS ASSOCIATED WITH THE REMOVAL OF THE EXISTING OVERLAY SHALL BE INCLUDED IN THE BID ITEM "REMOVAL OF EXISTING P.C.C. OVERLAY". REMOVAL OF EXISTING OVERLAY SHALL BE COMPUTED IN SQUARE YARDS FROM THE MEASUREMENT OF AREAS REMOVED. THE CONTRACTOR WILL BE PAID THE CONTRACT PRICE PER SQUARE YARD FOR FURNISHING ALL EQUIPMENT AND LABOR NECESSARY TO REMOVE THE CONCRETE TO WITHIN 1/4 INCH ABOVE THE CLASSIFICATION LINE. ALL COSTS, INCLUDING FURNISHING EQUIPMENT AND LABOR, ASSOCIATED WITH REMOVAL OF THE NEXT 1/4 INCH OF CONCRETE (TO THE CLASSIFICATION LINE) SHALL BE INCLUDED IN THE BID ITEM "DECK OVERLAY".

UPON COMPLETION OF THE REMOVAL OF CONCRETE DOWN TO THE CLASSIFICATION LINE, THE ENGINEER SHALL DETERMINE THE AREAS OF BRIDGE DECK TO BE REPAIRED AS "DECK REPAIR, CLASS A". ACTUAL HOLLOW AREAS, AS DETERMINED BY THE ENGINEER, SHALL BE REPAIRED.

The existing overlay thickness shall include the original surface raise and scarification. The depth to the new classification line shall be 1/4" below the original classification line.

If existing PCC overlay thickness is reasonably determined to be 0.75” thicker (or more) than indicated in existing plan sets discuss with supervising Unit Leader on the need to modify this note and plan details to address milling of the existing overlay and depth of the new re-overlay. In general, it is required to remove all of the existing overlay and to extend a 1/4” into the original deck. Modifying notes and details may be needed to ensure the contractor accounts for any additional costs in their bid when existing and new overlay thickness are greater than what is typical.

Discuss with the supervising Section Leader the possibility of requesting concrete cores from the bridge deck to determine the integrity of the original deck and if overlay is a wise investment.

The second paragraph of this note is necessary to provide method of measurement and basis of payment for the bid item "Removal of Existing P.C.C. Overlay", since it is not included in the Standard Specifications.

The last 1/4" of concrete removal is included in the bridge deck overlay item. This eliminates the need of redefining bridge deck overlay (which includes 1/4" of deck scarification as per the Standard Specifications [IDOT SS 2413.01, C]).

E415: Deck surfacing, repair, and overlay, HPC-O concrete curing

IF THE CONTRACTOR USES HPC-O MIX THE SURFACE SHALL BE CURED FOR AT LEAST 168 HOURS. FOR THE FIRST 96 HOURS, KEEP THE BURLAP CONTINUOUSLY WET BY MEANS OF AN AUTOMATIC SPRINKLING OR WETTING SYSTEM. AFTER 96 HOURS, THE CONTRACTOR MAY COVER THE WET BURLAP WITH A LAYER OF 4 MIL POLYETHYLENE FILM FOR A MINIMUM OF 72 HOURS IN LIEU OF USING THE SPRINKLING OR WETTING SYSTEM. IF THE POLYETHYLENE FILM IS USED, THE CONTRACTOR SHALL BE REQUIRED TO VERIFY THE BURLAP REMAINS WET FOR THE 72 HOUR PERIOD.

This note which supersedes Article 2413.03, F, 2 of the Standard Specifications shall only be used on the plans at the District's request.

E417: Deck replacement, railroad overpass coordination

WORK WITHIN RAILROAD RIGHT-OF-WAY, INCLUSIVE OF OVERHEAD WORK, SHALL COMPLY WITH RAILROAD REQUIREMENTS. WORK ACTIVITIES WHICH HAVE POTENTIAL TO IMPACT THE OPERATION, PROPERTY AND/OR FACILITIES OF THE RAILROAD SHALL BE SUBJECT TO REVIEW AND APPROVAL BY THE RAILROAD. PRIOR TO CONSTRUCTION, THE CONTRACTOR SHALL SUBMIT PROPOSED MATERIALS AND PROCEDURES APPLICABLE TO SHORING, ERECTION, DEMOLITION, FALSEWORK, AND OTHER WORK ACTIVITIES IDENTIFIED BY THE RAILROAD AS RELEVANT. ALL COSTS OF LABOR, EQUIPMENT AND MATERIALS FOR COORDINATING AND EXECUTING THE WORK IN ACCORDANCE WITH RAILROAD REQUIREMENTS SHALL BE INCIDENTAL TO THE PRICE BID FOR THE WORK.

Place with General Notes. At a minimum, the contractor is required to submit a demolition plan.

E420: Stage construction, maintain traffic

CONSTRUCTION SHALL BE DONE IN STAGES WITH AT LEAST ONE LANE TRAFFIC MAINTAINED AT ALL TIMES IN ACCORDANCE WITH "TRAFFIC CONTROL PLAN" NOTE.

E421: Stage construction, reverse stages option

CONSTRUCTION STAGES I & II AS DETAILED ON THESE PLANS MAY BE REVERSED AT THE CONTRACTOR'S OPTION SUBJECT TO THE ENGINEER'S APPROVAL.

Use this note only when stage numbers are shown on the plans and it is feasible to reverse the staging.

E422: Stage construction, construction options, rebuilding a backwall

BEFORE PROCEEDING WITH BRIDGE DECK OVERLAY AND BRIDGE DECK REPAIR THE CONTRACTOR MAY COMPLETE ALL STAGES OF OTHER CONSTRUCTION. ANY CONSTRUCTION SHALL HAVE STAGE LIMITS, TEMPORARY BARRIER RAIL AND TRAFFIC CONTROL AS DETAILED ON THESE PLANS. TEMPORARY BARRIER RAIL AND TRAFFIC CONTROL MAY BE ADJUSTED TO FIT THE ACTUAL WORK AND STORAGE AREA. WHEN BACKWALLS AND/OR APPROACH SECTIONS ARE TO BE REBUILT TO A RAISED SURFACE, AND WHEN DECK OVERLAY IS NOT A PART OF THE SAME STAGE, THE CONTRACTOR SHALL PROVIDE FOR PROFILE TRANSITION WITH H.M.A. SURFACING. PROFILE TRANSITION SHALL BE TAPERED AT A RATE OF 25' FOR 1 1/2 INCHES OF RAISE. THE H.M.A. TRANSITION MATERIAL SHALL BE A COMMERCIAL GRADE HOT SURFACING MIX OR A MIX APPROVED BY THE ENGINEER H.M.A. MAY BE PLACED BY HAND METHODS AND MAY BE COMPACTED BY ANY APPROVED METHOD. ALL COSTS FOR ADDITIONAL TRAFFIC CONTROL, REPOSITI0NING OF BARRIER AND H.M.A. SURFACING SHALL BE BORNE BY THE CONTRACTOR.

Usually this note is only necessary when plans indicate rebuilding a backwall.

E429: Superstructure raise, vertical tolerance and horizontal support

THE BRIDGE SUPERSTRUCTURE IS TO BE RAISED AS A SINGLE UNIT USING A SUFFICIENT NUMBER OF HYDRAULIC JACKS AT EACH SUPPORT. IN ORDER TO PREVENT OVERSTRESSING OF THE SUPERSTRUCTURE MEMBERS, THE ENTIRE SUPERSTRUCTURE SHALL BE RAISED UNIFORMLY AND SIMULTANEOUSLY, WITH NO MORE THAN

- A 1 INCH LONGITUDINAL ELEVATION DIFFERENCE BETWEEN ADJACENT BENTS AND
- A ¼ INCH TRANSVERSE ELEVATION DIFFERENCE BETWEEN ADJACENT BEAMS.

THE TRANSVERSE ELEVATION DIFFERENCE MAY ACCUMULATE ACROSS THE BRIDGE, BUT THERE SHALL BE NO MORE THAN A 1 INCH TOTAL ACCUMULATION. IF THERE ARE ANY SIGNS OF DISTRESS DURING OR AFTER RAISING OPERATIONS THESE LIMITS SHALL BE ADJUSTED DOWNWARD AS DETERMINED BY THE ENGINEER. LONGITUDINAL AND LATERAL SUPPORT OF THE SUPERSTRUCTURE SHALL BE PROVIDED DURING RAISING OPERATIONS TO PREVENT HORIZONTAL MOVEMENT OF THE SUPERSTRUCTURE.

Include this note with the general notes when a superstructure needs to be raised. Even with a correct jacking setup contractors cannot raise the superstructure perfectly uniformly and need a small amount of vertical tolerance. The ¼ inch tolerance between adjacent beams is based on information from the field for a successful superstructure raising project. The 1 inch longitudinal tolerance between adjacent bents should generally be acceptable for even short span bridges. Traffic should not be permitted on the bridge during the jacking and raising. Once the bridge is raised, blocked, and longitudinally and laterally supported, traffic may be permitted. The Contractor shall provide details illustrating the blocking system, and longitudinal and lateral support to the Engineer for approval. Traffic permitted on a raised bridge with expansion joints, particularly higher speed traffic, will require additional remediation due to discontinuities in the riding surface.

E430: Repair project, general outline of work

THIS DESIGN IS FOR REPAIRS TO THE EXISTING ___. ELECTRONIC COPIES OF ORIGINAL DESIGN PLANS WILL BE MADE AVAILABLE TO THE CONTRACTOR AS PART OF THE E-FILES SUPPLIED WITH THE CONTRACT DOCUMENTS. REPAIR SHALL CONSIST OF:

1. _____

2. _____

The general notes should lead off with the above. Fill in a description of the existing structure and the highway it is on and the feature crossed. Specify in general the extent of work covered in the plans (bridge and road) for the project such as bridge deck repair and overlay, removal of existing handrail, placing new cast-in-place barrier rail, replacing guardrail, etc.

E431: Curb repair, concrete notes

AREAS OF CURB INDICATED ON THE "SURVEY PLOT" OR DESIGNATED BY THE ENGINEER ARE TO BE REPAIRED USING CONCRETE REPAIR NOTES AND DETAILS INCLUDED IN THESE PLANS.

Repair of curbs is addressed better with the concrete repair notes and details than with the note specifying Class A Bridge Deck Repair. Include the concrete repair detail sheet [OBS SS 1045] in the plans. Bid this area of repair as "Concrete Repair".

E432A: Overlay construction joint, temporary barrier rail conflict

SCREED EXTENSION OR OVERLAY BEYOND THE LONGITUDINAL CONSTRUCTION JOINT MAY BE LESS THAN THE 6 INCHES REQUIRED BY ARTICLE 2413.03, A, 4, OF THE STANDARD SPECIFICATIONS. THE ENGINEER MAY REQUIRE ADDITIONAL VIBRATION OR SPECIAL FINISHING PROCEDURES ADJACENT TO THE LONGITUDINAL CONSTRUCTION JOINT.

Use this note only when the temporary barrier rail is placed less than 8" from the overlay construction joint.

E432B: Overlay construction joint, sandblasting

SURFACE PREPARATION SHALL BE ACCORDING TO ARTICLE 2413.03, B AND C OF THE STANDARD SPECIFICATIONS. THE CONTRACTOR SHALL ENSURE THE VERTICAL EDGE OF THE STAGE 1 OVERLAY IS PREPARED FOR PLACEMENT OF THE NEW CONCRETE FOR STAGE 2 BY SANDBLASTING OR SHOT BLASTING, FOLLOWED BY AN AIR BLAST. ENSURE THIS CLEANING REMOVES ALL DIRT, OIL, AND OTHER FOREIGN MATERIAL. ENSURE IT REMOVES ALL UNSOUND CONCRETE, LAITANCE, OR LOOSE MATERIAL FROM THE SURFACE AND EDGES AGAINST WHICH THE SURFACE MIXTURE IS TO BE PLACED. THE CLEANING SHOULD ROUGHEN THE SURFACE IN ORDER TO PROVIDE SATISFACTORY BOND WITH THE SURFACING MIXTURE.

E433: Surface raise, restriction

SURFACE RAISE, AS SHOWN ON THE PLANS, SHALL BE CONSIDERED A MINIMUM. IN ORDER TO LIMIT THE ADDITIONAL DEAD LOAD SURFACE RAISE SHALL BE RESTRICTED TO A MAXIMUM OF 1/2 " MORE THAN SHOWN ON THE PLANS. PROFILE MAY BE ADJUSTED TO THE EXTENT POSSIBLE WITHIN THESE LIMITS.

E434: Existing structure, field verify dimensions

ALL DIMENSIONS AND DETAILS SHOWN ON THESE PLANS PERTINENT TO NEW CONSTRUCTION SHALL BE VERIFIED IN THE FIELD BY THE CONTRACTOR BEFORE STARTING CONSTRUCTION.

E435: Existing structure, field verify dimensions, steel

ALL DIMENSIONS REQUIRED TO FABRICATE NEW STRUCTURAL STEEL SHALL BE FIELD VERIFIED BY THE CONTRACTOR.

When existing structural steel is replaced or new steel is attached to existing members include this note. Three examples when this note would be required are:

1. When replacing damaged truss members.
2. When replacing damaged rail members.
3. When adding raise plates to sliding plate expansion devices.

E436: Existing structure, faint lines

FAINT LINES ON PLANS INDICATE EXISTING PORTIONS OF THE BRIDGE.

E437: Reinforcing, minimum clearances

MINIMUM CLEAR DISTANCE FROM FACE OF CONCRETE TO NEAR REINFORCING BAR IS TO BE 2" UNLESS OTHERWISE NOTED OR SHOWN.

E438: Concrete sealer, abutment seats

IN ADDITION TO THE REQUIREMENTS OF ARTICLE 2413.03, G, OF THE STANDARD SPECIFICATIONS, BOTH EXPOSED ABUTMENT BRIDGE SEATS AND WASH SURFACES SHALL HAVE AN APPLICATION OF CONCRETE SEALER IN ACCORDANCE WITH ARTICLE 2403.03, P, 3, OF THE STANDARD SPECIFICATIONS.

Check with the supervising Section Leader for guidance for placing sealer on existing abutments.

All primary and interstate bridges with any type of expansion device shall have concrete sealer applied to the exposed bridge seat and wash surfaces.

E440: Removal, scheduled items

THE LUMP SUM BID FOR "REMOVALS, AS PER PLAN" SHALL INCLUDE ALL COSTS ASSOCIATED WITH REMOVING THE _____. REMOVAL OF SCHEDULED ITEMS SHALL BE IN ACCORDANCE WITH SECTION 2401 OF THE SPECIFICATIONS. ANY DAMAGE TO ANY STEEL OR CONCRETE NOT TO BE REMOVED SHALL BE THE RESPONSIBILITY OF THE CONTRACTOR AND REPAIRED AT NO EXTRA COST TO THE STATE.

Use this note when the removal includes partial removal of a structure. Describe what is to be removed.

E441A: Removal, handrail, property of contractor

THE BID ITEM "REMOVAL OF EXISTING HANDRAIL + END POST" SHALL INCLUDE ALL COSTS ASSOCIATED WITH DISMANTLING THE EXISTING _____ HANDRAIL (APPROXIMATELY _____ L.F. AND _____ POSTS). THE HANDRAILS ARE TO BECOME THE PROPERTY OF THE CONTRACTOR.

Specify steel or aluminum handrail, length of rail, and number of posts. If the bridge has no end posts, use the bid item “REMOVAL OF EXISTING HANDRAIL”.

E441B: Removal, handrail, property of Iowa DOT

THE BID ITEM "REMOVE AND STOCKPILE EXISTING HANDRAIL" SHALL INCLUDE ALL COSTS ASSOCIATED WITH THE DISMANTLING, HAULING AND STORING OF BOTH OF THE HANDRAILS (APPROXIMATELY _____ L.F. OF RAIL AND _____ POSTS). THE RAILS, POSTS AND HARDWARE ARE TO BE HAULED TO THE IOWA D.O.T. MAINTENANCE YARD AT _____. ANCHOR BOLTS NEED NOT BE SALVAGED.

This note should only be used if there is a specific request from the field office for the Iowa DOT to keep the railing. See also E131.

E442: Removal, HMA overlay

THE PRICE BID FOR "REMOVAL OF ASPHALT CEMENT CONCRETE SURFACING" SHALL BE CONSIDERED FULL COMPENSATION FOR REMOVAL OF THE EXISTING H.M.A. OVERLAY TO THE LIMITS SHOWN. THE REMOVED MATERIAL SHALL BECOME THE PROPERTY OF THE CONTRACTOR.

Use this note when a bridge has an HMA overlay.

E443: Keyways, dimensions and bevel

KEYWAY DIMENSIONS SHOWN ON THE PLANS ARE BASED ON NOMINAL DIMENSIONS UNLESS STATED OTHERWISE. IN ADDITION, THE BEVEL USED ON THE KEYWAY SHALL BE LIMITED TO A MAXIMUM OF 10 DEGREES FROM VERTICAL.

There has been some confusion in the field on the keyway dimensions for construction joints, whether they are based on nominal or actual dimensions (for example, 2 x 4 or 1½ inches x 3½ inches). Also, questions have been raised about the keyway bevel. Contractors generally prefer as much bevel as possible to make it easier to remove the keyway forms after casting; however, the Bureau would like to limit the bevel to provide a better shear plane across the joint.

Provide this note on all projects currently being developed. The Assistant Bridge Engineer will be working with the Specifications Committee to include information in the Iowa DOT Standard Specifications.

E445: Heavy construction equipment, bridge protection during beam replacement

HEAVY CONSTRUCTION EQUIPMENT WILL NOT BE ALLOWED ON THE BRIDGE DURING CONSTRUCTION UNLESS PRIOR WRITTEN APPROVAL OF THE ENGINEER IS OBTAINED. APPROVAL SHALL BE OBTAINED BY SUBMITTING A WRITTEN REQUEST TO THE ENGINEER. THIS REQUEST SHALL INCLUDE THE FOLLOWING:

1. A DETAILED PLAN ADEQUATELY DESCRIBING THE EQUIPMENT AND HOW IT IS PROPOSED TO BE USED. THIS PLAN SHALL CONTAIN, AS A MINIMUM, THE FOLLOWING INFORMATION:

A. THE CONFIGURATION AND WEIGHT OF THE EQUIPMENT PROPOSED TO BE PLACED ON THE BRIDGE.

B. THE PROPOSED LOCATION(S) OF THE EQUIPMENT ON THE BRIDGE DURING ALL LIFTING OPERATIONS.

C. THE WEIGHT OF ALL PROPOSED LIFTS TO BE MADE BY THE EQUIPMENT.

D. THE LOAD TO ALL WHEELS/AXLES/OUTRIGGERS/CRAWLERS RESULTING FROM THE PROPOSED LIFTING OPERATIONS, DURING ALL CRITICAL PHASES OF THE LIFTING OPERATIONS.

2. THE NECESSARY CALCULATIONS TO VERIFY THAT NO COMPONENT OF THE BRIDGE WILL BE OVERSTRESSED DURING THE PROPOSED USE OF THE EQUIPMENT ON THE BRIDGE. THE CALCULATIONS SHALL BE CERTIFIED BY A PROFESSIONAL ENGINEER CURRENTLY LICENSED TO PRACTICE ENGINEERING IN THE STATE OF IOWA.

When replacing prestressed concrete beams that have been damaged by high loads it has been Bureau practice to include a plan note that prohibits placing heavy construction equipment on the deck during repair operations. Several contractors have requested exceptions to this restriction stating that they have the necessary equipment to do any removal and/or replacement from the deck, and by so doing cause less of an obstruction to traffic using the highway below. In Chapter 11 of the Construction Manual the Construction and Materials Bureau recently defined loads that require review and approval, and thus there will be reason in addition to this plan note for the contractor to submit deck loading plans.

The Bureau has no objection to the placing of construction equipment on the bridge deck providing the traffic requirements across the bridge can still be satisfied and that no portions of the structure are overstressed during repair operations.

Therefore, on plans involving the replacement of damaged prestressed concrete beams this note should be included.

E447: Heavy construction equipment, bridge protection during overlays and re-overlays

READY MIX TRUCKS ARE NOT ALLOWED ON THE PREPARED PORTION OF THE BRIDGE DECK.

Since the deck or slab will be in a weakened state during an overlay or re-overlay project, ready mix trucks are specifically excluded from being on the prepared portion of the bridge deck.

E450: Approach pavement, new PCC

THE CONTRACTOR SHALL CONSTRUCT NEW BRIDGE APPROACH PAVEMENT AS NOTED AND SHOWN. THE PRICE BID FOR "BRIDGE APPROACH SECTION, REINFORCED AS PER PLAN" SHALL BE FULL COMPENSATION FOR FURNISHING AND INSTALLING P.C. CONCRETE APPROACH PAVEMENT, INCLUDING EXCAVATION REINFORCING STEEL AND JOINT MATERIAL REQUIRED.

This note should be used for approach slab repair (non-standard) situations where a portion of the approach slab is replaced or where special details or reinforcing is required in the approach slab and shown on the plans.

E451: Approach pavement, PCC overlay

THE CONTRACTOR SHALL PLACE PORTLAND CEMENT CONCRETE OVERLAY ON THE BRIDGE APPROACH PAVEMENT AS NOTED AND SHOWN ON STANDARD ROAD PLAN BR-111. PAYMENT FOR THIS WORK SHALL BE NOTED ON STANDARD ROAD PLAN BR-111.

Include this note only when the overlay quantity for the approaches is part of the bridge quantities.

E461: Backwall repair, Class C concrete

THE TOPS OF THE ABUTMENT BACKWALLS AS SHOWN SHALL BE CONSTRUCTED USING STRUCTURAL CONCRETE CLASS C. PROMPTLY AFTER THE CONCRETE HAS BEEN PLACED AND VIBRATED AS PROVIDED IN ARTICLES 2403.03, C, AND 2403.03, D, OF THE STANDARD SPECIFICATIONS, IT SHALL BE HAND FINISHED TO PROVIDE A SMOOTH SURFACE WITH THE PROPER CROWN. THE CONTRACTOR MAY ELECT TO USE FORMWORK WHICH IS MARKED OR TRIMMED TO THE CORRECT ELEVATION AND CROWN TO PROVIDE THE LIMITS FOR THE HAND FINISHING.

This note is used when a portion of or the entire backwall is being reconstructed.

Generally the top of the abutment backwall is 1.00 foot or less in width, depending on the type of expansion joint. This is too narrow an area to realistically use any type of vibrator screed. Typically the tops of abutment backwalls are surveyed and closely graded on the formwork. The concrete finishing is performed by vibrating the concrete with stinger vibrators, and then the concrete surface is hand float finished. The contractor would not be able to use either a finishing machine or a vibratory screed and achieve as good a grade and finish as they can by closely grading the formwork and hand float finishing.

E462: Backwall repair, earth support, stage construction

IT WILL BE NECESSARY TO SUPPORT THE EARTH AND/OR GRANULAR MATERIAL BEHIND THE ABUTMENT DURING RECONSTRUCTION OF THE ABUTMENT BACKWALLS BY SOME METHOD APPROVED BY THE ENGINEER. ALL COSTS FOR SUPPORTING THE EARTH AND/OR GRANULAR MATERIAL SHALL BE INCLUDED IN THE PRICE BID FOR "CLASS 20 EXCAVATION".

This note is used when a backwall is being reconstructed under stage construction.

E463: Concrete sealer, barrier rail

THE TOP AND INTERIOR FACES OF THE EXISTING CONCRETE RAILING ARE TO BE CLEANED AND SEALED IN ACCORDANCE WITH ARTICLE 2403.03, P, OF THE STANDARD SPECIFICATIONS. IF NEW SECTIONS OF RAIL ARE CONSTRUCTED, THE NEW SECTIONS SHALL NOT BE SEALED. ALL COSTS ASSOCIATED WITH CLEANING AND SEALING OF THE CONCRETE RAILS SHALL BE INCLUDED IN THE UNIT PRICE BID ITEM “ ?? “.

If repair work is being done on a bridge, the field has requested that we apply concrete sealer to the traffic face and top of the existing concrete barrier rails. This should apply

when overlays are being applied or when rail end sections are being updated on the structures. Do not seal rails unless other repairs require traffic control for both sides of the bridge.

New concrete barrier rails shall not be sealed. There is concern that the sealant prevents proper curing of the concrete and therefore should not be applied to new concrete surfaces.

The cost of the sealing should be made incidental to a contract item. Examples of bid items in which it could be included are: “Concrete Repair”, “Repair Beam Ends”, “Deck Overlay” or “Structural Concrete”.

One issue to consider before adding the sealing work to the plans is the condition of the existing barrier rail. If the barrier has severe deterioration, consider whether repairs need to be made first before sealing, or if the sealing is worth the cost.

E470: Paint, raise plate on expansion device

SURFACES OF EXISTING EXPANSION DEVICE ARE TO BE CLEANED OF EXISTING CORROSION AND PAINT IN PREPARATION FOR FIELD WELDING. THE 1 1/2 " THICK RAISE PLATES FOR THE EXPANSION DEVICE ARE TO BE CLEANED AND PAINTED AFTER FIELD WELDING TO THE EXISTING EXPANSION DEVICE. THE CLEANING IS TO BE BY VACUUM BLAST OR BY A NON-BLASTING METHOD AND IS TO COMPLY WITH THE STEEL STRUCTURES PAINTING COUNCIL SPECIFICATIONS SSPC-SP3. THE EXPOSED TOP SURFACES OF THE COMPLETED EXPANSION DEVICE ARE TO BE GIVEN ONE COAT OF BOTH A RUST INHIBITOR TYPE PRIMER AND FINAL COAT AS APPROVED BY THE ENGINEER. THE COLOR OF THE DRY PAINT SHOULD APPROXIMATE THE COLOR OF CONCRETE. ONLY THE EXPOSED SURFACES OF THE EXPANSION DEVICE AND RAISE PLATES ARE TO BE PAINTED. NO PAINTING OF OTHER STEEL IS REQUIRED. BECAUSE OF THE SMALL QUANTITY, ALL COST ASSOCIATED WITH CLEANING AND PAINTING OF THE EXPANSION DEVICE AS NOTED IS TO BE INCLUDED IN THE BID ITEM "PAINTING STRUCTURAL STEEL".

THE BID ITEM "STRUCTURAL STEEL" SHALL INCLUDE ALL COSTS ASSOCIATED WITH FURNISHING AND INSTALLING RAISE PLATES ON EXPANSION DEVICE AS SHOWN EXCEPT ITEMS INCLUDED IN THE BID ITEM " PAINTING STRUCTURAL STEEL" AND THE BID ITEM "CONTAINMENT".

Coating is to be specified in generic terms. Expand the definition of structural steel when appropriate. Use containment note and scrape test note. See the cleaning and painting article in the bridge design manual [BDM 12.1.9.5.2].

E471: Paint, strip seal on sliding plate

SURFACES OF EXISTING EXPANSION DEVICE AS DETAILED IN THESE PLANS ARE TO BE CLEANED OF EXISTING CORROSION AND PAINT IN PREPARATION FOR FIELD WELDING. THE NEW STEEL EXTRUSION TO BE PAINTED SHALL BE CLEANED AND PAINTED AFTER FIELD WELDING TO THE EXISTING EXPANSION DEVICE. THE CLEANING IS TO BE BY VACUUM BLAST OR BY A NON-BLASTING METHOD AND IS TO COMPLY WITH THE STEEL STRUCTURES PAINTING COUNCIL SPECIFICATIONS SSPC-SP3. THE EXPOSED SURFACES OF THE COMPLETED EXPANSION DEVICE ARE TO BE GIVEN ONE COAT OF BOTH A RUST INHIBITOR TYPE PRIMER AND FINAL COAT AS APPROVED BY THE ENGINEER. THE COLOR OF THE DRY PAINT SHOULD APPROXIMATE THE COLOR OF CONCRETE. ONLY THOSE SURFACES OF THE EXPANSION DEVICE NOTED TO BE PAINTED ARE TO BE PAINTED. NO PAINTING OF OTHER STRUCTURAL STEEL IS REQUIRED. BECAUSE OF THE SMALL QUANTITY, ALL COST ASSOCIATED WITH CLEANING AND PAINTING OF THE EXPANSION DEVICE AS NOTED IS TO BE INCLUDED IN THE BID ITEM "PAINTING STRUCTURAL STEEL".

THE BID ITEM "STEEL EXTRUSION JOINT WITH NEOPRENE" SHALL INCLUDE ALL COSTS ASSOCIATED WITH FURNISHING AND INSTALLING THE EXPANSION DEVICE AS SHOWN, EXCEPT ITEMS INCLUDED IN THE BID ITEM "PAINTING STRUCTURAL STEEL" AND THE BID ITEM "CONTAINMENT".

Coating is to be specified in generic terms. Use this note when a strip seal is to be installed on a sliding plate expansion device. The plans should show what is to be painted. Use containment note and scrape test note.
See the cleaning and painting article in the bridge design manual [BDM 12.1.9.5.2].

E472A: Paint, minor part repainting, steel bridge

THE LUMP SUM BID FOR " PAINTING STRUCTURAL STEEL" SHALL INCLUDE THE COST OF PREPARING ALL THE EXISTING STRUCTURAL STEEL FOR PAINTING (INCLUDING BEARINGS) AND FIELD PAINTING EXISTING STRUCTURAL STEEL AS NOTED IN THESE PLANS. CLEANING AND PAINTING SHALL BE IN ACCORDANCE WITH SECTION 2508, OF THE STANDARD SPECIFICATIONS. AN EPOXY PAINT SYSTEM SHALL BE USED.

Use this note for repainting of minor parts (bearings, expansion devices, etc.) of steel bridges. Repainting is normally a separate contract. Use containment note and scrape test note. The bid items “Bridge Cleaning for Painting” and “Blast Cleaning of Structural Steel” shall not be used, but considered incidental and included in “Painting of Structural Steel”.

E472B: Paint, complete repainting, steel bridge

THE LUMP SUM BID FOR “BRIDGE CLEANING FOR PAINTING” SHALL INCLUDE THE COSTS OF REMOVAL OF ACCUMULATED FOREIGN MATERIAL, LOOSE PAINT AND WATER WASHING IN ACCORDANCE WITH SECTION 2508, OF THE STANDARD SPECIFICATIONS.

THE LUMP SUM BID FOR “BLAST CLEANING OF STRUCTURAL STEEL” SHALL INCLUDE ALL COSTS FOR THE PREPARATION OF STEEL SURFACES THAT REQUIRE PAINTING IN ACCORDANCE WITH SECTION 2508, OF THE STANDARD SPECIFICATIONS.

THE LUMP SUM BID FOR “PAINTING OF STRUCTURAL STEEL” SHALL INCLUDE ALL COSTS FOR PAINTING THE STRUCTURAL STEEL IN ACCORDANCE WITH SECTION 2508, OF THE STANDARD SPECIFICATIONS. AN EPOXY PAINT SYSTEM SHALL BE USED. BEFORE CLEANING THE EXISTING STRUCTURAL STEEL, THE BRIDGE CONTRACTOR SHALL REMOVE ANY ATTACHMENTS NOT BEING REUSED. IN ADDITION, ANY EXISTING STEEL INACCESSABLE AFTER REASSEMBLY WILL BE GIVEN THE FULL PAINT SYSTEM BEFORE FINAL ASSEMBLY OF THE STRUCTURE.

Use this note for steel bridges that are being remodeled, where complete repainting is required. Use containment note and scrape test note.

E472C: Paint, strengthening angles, steel bridge

THE LUMP SUM BID ITEMS FOR “BRIDGE CLEANING FOR PAINTING”, “BLAST CLEANING OF STRUCTURAL STEEL” AND “PAINTING OF STRUCTURAL STEEL” SHALL INCLUDE THE COSTS OF CLEANING, BLAST CLEANING AND FIELD PAINTING OF THE EXISTING STRUCTURAL STEEL AREA WHERE THE STRENGTHENING ANGLES WILL BE INSTALLED. THE BID ITEMS SHALL BE IN ACCORDANCE WITH SECTION 2508, OF THE STANDARD SPECIFICATIONS. THE PAINT SYSTEM REQUIRED IS DESCRIBED IN THE “BEAM STRENGTHENING NOTES” IN THESE PLANS.

Bid items for “Bridge Cleaning for Painting”, “Blast Cleaning of Structural Steel” and “Painting of Structural Steel” and "Containment" shall be included on the plan in

accordance with Article 2508.01, A, Non-Hazardous Paint Removal, of the Standard Specifications.

Place "Beam Strengthening Notes" E1000 on the detail sheet, which shows the strengthening angles.

E473: Paint, bearing repainting, concrete bridge

ABUTMENT BEARINGS (SOLE PLATES AND MASONRY PLATES) ARE TO BE CLEANED AND PAINTED. CLEANING BY VACUUM BLASTING OR BY A NON-BLASTING METHOD IS REQUIRED. SURFACE TO BE PAINTED SHALL BE PREPARED IN ACCORDANCE WITH STEEL STRUCTURES PAINTING COUNCIL (SSPC) SP3. SURFACES OF THE ABUTMENT BEARINGS ARE TO BE GIVEN ONE COAT OF BOTH A RUST INHIBITOR TYPE PRIMER AND FINAL COAT AS APPROVED BY THE ENGINEER. THE COLOR OF THE DRY PAINT SHOULD APPROXIMATE THE COLOR OF CONCRETE. THIS WORK SHALL BE MEASURED AND PAID FOR AT THE CONTRACT UNIT PRICE PER LUMP SUM FOR THE BID ITEM, "PAINTING OF STRUCTURAL STEEL".

Coating is to be specified in generic terms. This note is to be used on repair of a concrete beam bridge when bearings require painting. Check with the supervising Section Leader or District personnel to see if this should be part of the contract or if the bridge crew can handle the work. Include containment note and scrape test note.

E474: Paint, containment and disposal

CONTAINMENT AND DISPOSAL OF WASTE SHALL BE IN ACCORDANCE WITH SECTION 2508, OF THE STANDARD SPECIFICATIONS. ALL COSTS ASSOCIATED WITH HAULING AND DEPOSITING OF WASTE AT THE DESIGNATED SITE/FACILITY SHALL BE THE RESPONSIBILITY OF THE CONTRACTOR AND INCLUDED IN THE CONTRACT PRICE BID FOR THE “CONTAINMENT” ITEM.

This note is to be used when removing paint from an existing structure. The scrape test results will be used to determine if the waste is considered hazardous or not. Different containment and disposal methods are specified for hazardous and nonhazardous paint. In addition, the bid item “Paint Waste Transport and Disposal” is required for hazardous waste.

E480: Scrape test, lead and chromium ppm

A SCRAPE SAMPLE WAS TAKEN FROM AN AREA OF THIS BRIDGE TO GET AN INDICATION OF THE EXISTENCE OF AND LEVEL OF TOTAL LEAD AND TOTAL CHROMIUM. ANALYSIS OF TOTAL LEAD ON THIS SAMPLE WAS ____ PARTS PER MILLION (PPM). ANALYSIS OF TOTAL CHROMIUM ON THIS SAMPLE WAS ____ PPM. THESE ANALYSES SHOW THE EXISTENCE OF THESE TWO TOXIC CONSTITUENTS. LEVELS INDICATED BY THESE TESTS COULD CREATE CONDITIONS ABOVE REGULATORY LIMITS FOR HEALTH AND SAFETY REQUIREMENTS. NO OTHER CONSTITUENTS WERE ANALYZED. THE BIDDER SHOULD NOT RELY ON THE IOWA DOT’S TESTING AND ANALYSIS FOR ANY PURPOSE OTHER THAN AS AN INDICATION OF THE EXISTENCE OF THESE TWO TOXIC CONSTITUENTS.

Place this note on any plan requiring a paint scrape test. Scrape tests will be required in the following situations:

1. When a new bridge or culvert requires removal of an existing bridge that has painted structural steel. If the only steel on an existing bridge is expansion joint plate steel, a scrape test is not required, however, if the scrape test data is already available include the note in the plans.
2. On retrofit rail projects when the existing steel rail is to be removed.

3. On repair projects when cleaning and painting structural steel, including raise plates, bearings, and strengthening angles.
4. Bridge remodeling or widening where painting of or removal of the steel beams is involved.

The designer within the DOT should check to see if scrape tests have been performed on an existing bridge by checking the following Location and Environment Bureau (LEB) database on the W-drive. If the bridge is not in the database, the designer should ask that the Assistant Bridge Engineer request a scrape test from LEB.

W:\Highway\EnvServices\RegulatedMaterials\Paint

Modify this note if a leachable amount of lead or chromium is provided with the scrape test results. In that case, place the leachable amount in parenthesis after the sample results as follows: (INCLUDES ___ PPM LEACHABLE).

If the leachable amount of lead or chromium is 5.0 PPM or greater the material is considered hazardous. If the lead or chromium is in excess of 35,000 PPM and a leachable amount is not available, it is assumed that the material is hazardous.

If the paint is removed from the steel by a cleaning process and there is a significant amount of paint waste (i.e. a widening or remodeling project involving complete repaint) and the paint is considered or assumed to be hazardous, the designer shall provide bid items to address handling of hazardous material.

Scrape tests are required for steel bridge removal, including steel rail retrofits. Designers need to inform the supervising Section Leader early in the design phase of any project requiring structural steel removal so that scrape tests can be received before job turn-in. The section leader will then notify the Assistant Bridge Engineer, who will order the scrape tests. Results of the test analyses will be returned to us to be included on the plans as noted.

If retrofit rail plans, including removal of steel handrails, are incorporated into road plans, place the scrape test note on the retrofit rail plan.

E481: Scrape test, bridge demolition, hazardous levels of lead and chromium

THE CONTRACTOR SHALL CONDUCT THEIR OPERATIONS IN SUCH A MANNER THAT ANY PAINT REMOVED DURING DEMOLITION IS CONTAINED, COLLECTED, AND DISPOSED OF IN ACCORDANCE WITH SECTION 2508, OF THE STANDARD SPECIFICATIONS. BEFORE DELIVERY OF ANY SCRAP STEEL THE CONTRACTOR SHALL PROVIDE A WRITTEN NOTICE TO THE RECEIVING FACILITY. THIS NOTICE SHALL AT A MINIMUM INCLUDE:

1. A NOTICE THAT THE SCRAP STEEL IS COATED WITH PAINT THAT HAS REGULATED MATERIALS AT LEVELS WHICH COULD BE HAZARDOUS TO EMPLOYEES OR THE ENVIRONMENT.

2. A COPY OF THE SCRAPE SAMPLE PROVIDED IN THE CONTRACT DOCUMENTS.

3. A SIGNATURE BLOCK FOR THE RECEIVING FACILITY TO CONFIRM THEIR RECEIPT OF THIS INFORMATION.

A COPY OF THIS NOTICE, SIGNED BY THE RECEIVING FACILITY, SHALL BE RETURNED TO THE ENGINEER BEFORE ANY SCRAP STEEL IS REMOVED FROM THE PROJECT.

This plan note should be used for bridge demolition projects that have hazardous levels of paint. This would include the minor projects where we remove painted railings, expansion devices, etc. as intact units. Hazardous levels are defined as levels of chromium or lead in the paint system at leachable levels of 5.0 PPM or greater determined by TCLP (leach test) or total levels greater than 35,000 PPM without a leachable amount determined by TCLP.

The designer within the DOT should check to see if scrape tests have been performed on an existing bridge by checking the following Location and Environment Bureau (LEB) database on the W-drive. If the bridge is not in the database, the designer should ask that the Assistant Bridge Engineer request a scrape test from LEB.

W:\Highway\EnvServices\RegulatedMaterials\Paint

Add the following sentence to the end of the note when the Section 2508 paint waste transport and disposal bid item is not being used. Removal of intact masonry plates having potentially hazardous paint would be an example of a situation that requires the additional sentence.

THE COST OF HANDLING AND DISPOSAL OF ANY PAINTED STEEL OR REMOVED PAINT IS INCIDENTAL TO THE REMOVAL BID ITEM.

E485: Asbestos removal, location and areas

LABORATORY ANALYSIS HAS IDENTIFIED ASBESTOS AT THIS SITE. ASBESTOS SHALL BE REMOVED PRIOR TO BRIDGE DEMOLITION OPERATIONS. REMOVAL, TRANSPORT, AND DISPOSAL SHALL BE IN ACCORDANCE WITH SECTION 2536, OF THE STANDARD SPECIFICATIONS. REQUIRED DNR INFORMATION INCLUDES:

YEAR CONSTRUCTED	_____
ASBESTOS LOCATION	_____
FHWA NUMBER (EXISTING)	INFORMATION PROVIDED ELSEWHERE IN PLAN
ROAD/ROUTE (CITY)	INFORMATION PROVIDED ELSEWHERE IN PLAN
COUNTY	INFORMATION PROVIDED ELSEWHERE IN PLAN
DIRECTIONS TO BRIDGE	INFORMATION PROVIDED ELSEWHERE IN PLAN
BRIDGE SIZE	INFORMATION PROVIDED ELSEWHERE IN PLAN
NUMBER OF DECKS	1
ASBESTOS INSPECTOR/AMOUNTS	INFORMATION PROVIDED BY ENGINEER

Identify year bridge was constructed and specific locations where asbestos is present. For example asbestos may be present in the grey caulk around the base plates of a walkway railing. If appropriate indicate the number of base plates and the area affected. Reword the note as necessary to describe particular situations. Include lump sum bid item 2536-6745045 Removal of Asbestos in the estimated quantities table. See BDM 12.1.9.1.9 for additional information.

E490: Retrofit barrier rail, existing conduit

THE CONTRACTOR'S ATTENTION IS DIRECTED TO THE EXISTING CONDUIT IN THE BRIDGE CURBS. IN ORDER TO ENSURE THE EXISTING CONDUITS ARE NOT DAMAGED DURING PLACEMENT OF THE CAST-IN-PLACE BARRIER RAIL, THE CONTRACTOR SHALL BE REQUIRED TO DO THE FOLLOWING:

1. PHYSICALLY LOCATE THE CONDUIT AT APPROXIMATELY 50 FOOT INTERVALS PRIOR TO DRILLING ANY HOLES FOR 3/4" DIAMETER DOWEL BARS.

2. AFTER COMPLETION OF DRILLING FOR THE 3/4" DOWEL BARS AND PRIOR TO PLACEMENT OF THE DOWELS, PROVE TO THE INSPECTOR BY A REASONABLE METHOD THE USABILITY OF THE CONDUIT HAS NOT BEEN COMPROMISED.

COST OF THESE OPERATIONS WILL BE CONSIDERED INCIDENTAL TO THE COST OF THE CAST-IN-PLACE BARRIER RAIL. ANY DAMAGE TO THE CONDUIT OR WIRING BY THE CONTRACTOR WILL BE THE RESPONSIBILITY OF THE CONTRACTOR AND REPAIRED AT NO EXTRA COST TO THE STATE.

On some of the urban bridges where rail retrofits are to be installed, conduits for future electrification may have been placed in the existing curb. When conduits are in the curb, the barrier rail shall be widened from 10" to 1'-2 to attempt to miss the conduit. In addition, this note shall be placed on the plans.

13.6 Future notes

13.6.1 Index

Reserved

13.6.2 Listing

Reserved

13.7 Culvert

These notes are placed on the general notes and quantities sheet.

13.7.1 Index

Backfill
- Flowable mortar E680

Bell joints
- Upstream end E607

Concrete
- Construction joint, top of wall E623
- Construction joints, keyway E622
- Finishing, roadway surface E624
- Floor barrel E621
- Minimum clearances E620

Design
- Culvert standards E604
- Intent, RCB culvert E600
- Specification, 1983 AASHTO E601A
- Specification, 1992 AASHTO E601B
- Specification, 2012 AASHTO E601C

Excavation
- By others E660
- Class 20 assumption E663
- Excess Class 20 ..... E661
- Rock encountered E662

Existing structure
- Faint lines E602

Headwall curtain walls
- Dewatering, alternate methods E606

Paving notch
- Dowels E63
- Protection E625

Precast
- Bridge replacements E685

Headwall and box option E690
Reinforcing
Concrete pipe or CMP openings E633
Construction joint, no bell joints E630
Splice, bar spacing 6 inches or more E632A
Splice, bar spacing less than 6 inches E632B
Support intervals E631
Removal
Entire structure E651
Parapet, RCB extension E650
Stage construction
Typical method E640
Temporary shoring
Culvert extensions E670
Traffic control plan
Roadway closed E610B
Roadway open E610A
Traffic maintained, flowable mortar E611
Utility notification
Rural E603B
Urban E603A

13.7.2 Listing

E600: Design, intent, RCB culvert

IT IS THE INTENT OF THIS DESIGN TO CONSTRUCT A ____ x ____ x ____ REINFORCED CONCRETE BOX CULVERT SKEWED ___° ___ AHEAD AT STATIONS ___+__.

Use this note on RCB culvert projects. Modify the description for tapered inlets, drop inlets, flume outlets, differently skewed headwalls, RCB extensions, structure replaced, etc.

E601A: Design, specification, 1983 AASHTO

THE R.C.B. CULVERT SECTIONS ARE DESIGNED FOR HS20-44 LIVE LOAD AND EARTH FILLS OF x FT. THIS DESIGN IS BASED ON LOAD FACTOR DESIGN, ACCORDING TO THE 1983 AASHTO SPECIFICATIONS, FOR VERTICAL LOADS THE WEIGHT OF EARTH IS ASSUMED AS 140 PCF AND FOR LATERAL EARTH LOADS EQUIVALENT FLUID PRESSURE IS ASSUMED AS 36 PSF/FT. Z = 170 k/in FOR CRACK CONTROL.

Loading given in this note is from 1983 AASHTO specifications and is applicable for culverts using the current English single and twin RCB standards. This note is not required on the plan if the RCB-G1-87 or TWRCB-G1-87 standard is referenced. Use the E601B note for RCB culverts designed using the program SIGLBOX or MULTIBOX.

E601B: Design, specification, 1992 AASHTO

THE R.C.B. CULVERT SECTIONS ARE DESIGNED FOR HS 20-44 LIVE LOAD AND EARTH FILLS OF x FEET. THIS DESIGN IS BASED ON LOAD FACTOR DESIGN, ACCORDING TO THE 1992 AASHTO SPECIFICATIONS, FOR VERTICAL LOADS THE WEIGHT OF EARTH IS ASSUMED AS 120·Fe PCF AND FOR LATERAL EARTH LOADS THE EQUIVALENT FLUID PRESSURE IS ASSUMED AS 30 PSF/FT. OR 60 PSF/FT. Z = 170 k/in FOR CRACK CONTROL.

Loading given in this note is from 1992 AASHTO specifications.

Use this note for non-standard English (The SIGLBOX or MULTIBOX program is used for lengths in excess of 25’ or box size not covered by standards.) or triple RCB English standards. Current triple RCB English standards are designed for this loading case, however single and twin RCB English standards are designed with 1983 AASHTO specifications. Additional work to update the standards to AASHTO LRFD will be addressed in the future.

E601C: Design, specification, 2012 AASHTO

THE RCB CULVERT SECTIONS ARE DESIGNED FOR HL-93 LIVE LOAD AND EARTH FILLS OF XXX FEET.

THE RCB CULVERT SECTIONS ARE DESIGNED FOR CLASS 1 EXPOSURE CONDITIONS EXCEPT: CLASS 2 EXPOSURE CONDITION IS UTILIZED FOR THE SLAB DESIGN IN 0' FILL INSTANCES.

E602: Existing structure, faint lines

FAINT LINES ON PLANS INDICATE EXISTING STRUCTURE.

E603A: Utility notification, urban

UTILITY COMPANIES AND MUNICIPALITIES WHOSE FACILITIES ARE SHOWN ON THE PLANS OR KNOWN TO BE WITHIN THE CONSTRUCTION LIMITS SHALL BE NOTIFIED BY THE CONTRACTOR OF THE CONSTRUCTION STARTING DATE.

E603B: Utility notification, rural

UTILITY COMPANIES WHOSE FACILITIES ARE SHOWN ON THE PLANS OR KNOWN TO BE WITHIN THE CONSTRUCTION LIMITS SHALL BE NOTIFIED BY THE CONTRACTOR OF THE CONSTRUCTION STARTING DATE.

E604: Design, culvert standards

STANDARDS:

FOR DETAILS AND NOTES NOT SHOWN REFER TO THE FOLLOWING IOWA D.O.T. – CULVERT STANDARDS:

STANDARD	LATEST REVISION
---	---
---	---
---	---

E606: Headwall curtain walls, dewatering, alternate methods

WHEN DE-WATERING PRESENTS A PROBLEM FOR PLACING THE CURTAIN WALLS AS DETAILED, ALTERNATE METHODS SUCH AS STEEL SHEET PILE AND PRECAST CONCRETE WALLS MAY BE APPROVED BUT AT NO ADDITIONAL COST. THE CULVERT CONTRACTOR IS TO SUBMIT TO THE ENGINEER FOR APPROVAL COMPLETE DRAWINGS OF THE PROPOSED CURTAIN WALL ALTERNATE BEFORE BEGINNING CONSTRUCTION.

Place this note on all culvert plans that have headwall curtain walls. The criteria for approving a sheet pile alternate to the cast in place concrete curtain wall are as follows:

1. The top of the sheet piles is to extend a minimum of 6" into the concrete culvert floor.

2. The bottom of the sheet piles is to extend into the ground to an elevation at least 3' lower than the bottom elevation of the concrete curtain wall being replaced.

3. The steel sheet pile shall be a minimum thickness of 3/8".

E607: Bell joints, upstream end

BELL JOINTS SHALL BE PLACED ON THE UPSTREAM END OF THE BARREL SECTIONS.

Use for all culverts that require bell joints.

E610A: Traffic control plan, roadway open

THE ROADWAY WILL BE OPEN TO TRAFFIC DURING CONSTRUCTION. SEE TRAFFIC CONTROL PLAN NOTE.

E610B: Traffic control plan, roadway closed

THE ROADWAY WILL BE CLOSED TO TRAFFIC DURING CONSTRUCTION. SEE TRAFFIC CONTROL PLAN NOTE.

E611: Traffic control plan, traffic maintained, flowable mortar

THIS CULVERT IS TO BE BUILT UNDER THE EXISTING xx WITH TRAFFIC MAINTAINED AT ALL TIMES. SEE DESIGN SHEETS IN THESE PLANS FOR ROAD WORK INCLUDED IN THIS PROJECT.

Use for flowable mortar backfill type projects. Give bridge size and type.

E620: Concrete, minimum clearances

REINFORCING BAR CLEARANCES WILL BE AS FOLLOWS:

EDGE CLEARANCES: 2" EXCEPT

TOP OF FLOOR	2 1/4 " TO NEAR TRANSV. REINF. BAR
BOTTOM OF FLOOR	3 1/2 " TO NEAR TRANSV. REINF.

BAR END CLEARANCES:

VERTICAL TOP	2"
VERTICAL BOTTOM	3 1/2 "
TRANSVERSE	2"

E621: Concrete, floor barrel

FLOOR OF BARREL IS TO BE FINISHED SMOOTH. SIDES OF FOOTING ARE TO BE FORMED TO INSURE CORRECT LINE AND GRADE.

E622: Concrete, construction joints, keyway

ALL CONSTRUCTION JOINTS ARE TO BE FORMED WITH BEVELED 2 x 4 KEYWAYS, EXCEPT AT BELL JOINTS.

E623: Concrete, construction joint, top of wall

THE PERMISSIBLE CONSTRUCTION JOINT AT THE TOP OF THE WALLS MAY BE LOWERED AT THE CONTRACTOR'S OPTION WITH ENGINEER'S APPROVAL.

E624: Concrete, finishing, roadway surface

THE TOP SLAB SURFACE WILL BE FINISHED IN ACCORDANCE WITH ARTICLE 2301.03. MACROTEXTURE SHALL BE APPLIED LONGITUDINALLY (PARALLEL TO CENTERLINE OF THE ROADWAY). MACROTEXTURE SHALL BE PLACED ON THE ENTIRE TOP SURFACE OF THE TOP SLAB EXCEPT IN THE AREA WITHIN APPROXIMATELY 2 FEET OF THE PARAPET.

Use note E624 to allow longitudinal tining by hand when traffic will ride on the top slab of the culvert.

E625: Paving notch, protection

IF NECESSARY TO PREVENT DAMAGE TO THE END OF THE CULVERT SLAB OR CULVERT WALLS FROM CONSTRUCTION EQUIPMENT, AN APPROPRIATE METHOD OF PROTECTION APPROVED BY THE ENGINEER SHALL BE PROVIDED BY THE CULVERT CONTRACTOR AT NO EXTRA COST TO THE STATE.

When traffic will ride on the top slab of the culvert, provide this note for paving notch protection.

E630: Reinforcing, construction joint, no bell joints

EXCEPT FOR DOWEL BARS 5r1, LONGITUDINAL REINFORCING IS NOT TO EXTEND THRU THE CONSTRUCTION JOINTS.

Use this note only if bell joints are not required.

E631: Reinforcing, support intervals

ALL SLAB AND FLOOR REINFORCING STEEL IS TO BE SUPPORTED AT INTERVALS OF NOT MORE THAN 3'-O IN EITHER DIRECTION AS OUTLINED IN THE STANDARD SPECIFICATIONS.

E632A: Reinforcing, splice, bar spacing 6 inches or more

THE VERTICAL BARS IN THE WALLS MAY BE SPLICED ABOVE THE FOOTING AT THE CONTRACTOR'S OPTION AS FOLLOWS:

BAR SIZE NUMBER	4	5	6	7	8
MINIMUM SPLICE LENGTH	17"	21"	25"	34"	44"

THIS SPLICE, IF USED WILL BE AT THE CONTRACTOR'S EXPENSE.

Use this note when vertical wall bars are spaced at 6" or greater intervals. Do not allow this splice if culvert height is 5' or less.

E632B: Reinforcing, splice, bar spacing less than 6 inches

THE VERTICAL BARS IN THE WALLS MAY BE SPLICED ABOVE THE FOOTING AT THE CONTRACTOR'S OPTION AS FOLLOWS:

BAR SIZE NUMBER	4	5	6	7	8
MINIMUM SPLICE LENGTH	21"	26"	31"	43"	55"

THIS SPLICE, IF USED WILL BE AT THE CONTRACTOR'S EXPENSE.

Use this note when vertical wall bars are spaced at less than 6" intervals. Do not allow this splice if culvert height is 5' or less.

E633: Reinforcing, concrete pipe or CMP openings

A ?" DIAMETER RF-1 PIPE (OR CMP) IS TO BE CAST IN THE WALL (OR SLAB) AT THE LOCATION INDICATED. THE CONTRACTOR IS TO FURNISH A 4 FOOT SECTION OF PIPE. THE PIPE IS TO BE CONSIDERED INCIDENTAL TO THE UNIT PRICE BID FOR STRUCTURAL CONCRETE. THE LONGITUDINAL AND TRANSVERSE BARS, IN THE AREA OF THE OPENING, ARE TO BE FIELD CUT AND BENT TO PROVIDE FOR 2" MINIMUM CLEARANCE ALL AROUND THE OPENING.

An estimate reference information note for the “Structural Concrete” bid item needs to be included. This note will indicate the pipe size and length and make the furnishing and placing incidental to the cost of the “Structural Concrete”.

E634: Paving notch, dowels

PAVING NOTCH DOWELS SHALL BE STAINLESS STEEL DEFORMED BAR GRADE 60, MEETING THE REQUIREMENTS OF MATERIALS I.M. 452. THE WEIGHT OF THE

STAINLESS STEEL PAVING NOTCH DOWEL BAR IS TO BE INCLUDED WITH THE WEIGHT OF THE EPOXY COATED REINFORCING STEEL. ADDITIONAL COST IS TO BE INCLUDED IN THE PRICE BID FOR "REINFORCING STEEL - EPOXY COATED".

When traffic will ride on the top slab of the culvert the approach slab shall be tied to the paving notch with stainless steel dowels. Use E634/M 634 to specify the stainless steel material.

E640: Stage construction, typical method

NEW CULVERT CONSTRUCTION SHALL BE DONE IN STAGES AS SPECIFIED ON THE STAGE CONSTRUCTION LAYOUTS. ONE LANE OF TWO-WAY TRAFFIC IS TO BE MAINTAINED ON THE EXISTING ROADWAY DURING STAGE I AND ON A TEMPORARY RUNAROUND DURING STAGE II.

This is the typical method for staging RCB culvert construction.

E650: Removal, parapet, RCB extension

REMOVAL OF THE EXISTING CULVERT SHALL BE ON A VERTICAL PLANE PARALLEL WITH AND AT THE FRONT FACE OF THE EXISTING PARAPET, AND TO THE WIDTH OF THE FLOOR OF THE PROPOSED EXTENSION. THE REMOVAL LINE SHALL BE INITIATED WITH A 2 1/2 "± DEEP SAW CUT ON THE TOP AND BOTH SIDES OF EACH WALL, AND ACROSS THE TOP OF THE FLOOR. THIS SAW CUT SHOULD CUT THRU ANY EXISTING LONGITUDINAL REINFORCING THEREBY FACILITATING A NEAT NON-SPALLED BREAK LINE, IF EXISTING TOP OF PARAPETS WILL BE WITHIN 0'-6 OF PROPOSED SUBGRADE ELEVATION, THE PARAPETS SHALL BE REMOVED DOWN TO AN ELEVATION 1"± ABOVE THE TOP OF THE EXISTING SLAB. ANY EXISTING PARAPET VERTICAL BARS EXPOSED DURING PARAPET REMOVAL SHALL BE CUT OFF FLUSH WITH THE PARAPET REMOVAL LINE AND PAINTED WITH TWO COATS OF ZINC RICH PAINT.

Use this note for RCB culvert extension projects.

E651: Removal, entire structure

REMOVALS SHALL BE IN ACCORDANCE WITH SECTION 2401, OF THE STANDARD SPECIFICATIONS.

E660: Excavation, by others

ANY CHANNEL EXCAVATION BEYOND THE INLET OR OUTLET ENDS OF THE CULVERT IS TO BE DONE BY OTHERS AND IS NOT A PART OF THIS CONTRACT.

On projects where road and bridge plans are combined, do not reference work shown in the plans to be done "by others". On combined plans there are no "others".

E661: Excavation, excess Class 20

EXCESS CLASS 20 EXCAVATION MATERIAL SUITABLE FOR BACKFILLING SHALL BE STOCKPILED AT THE CONSTRUCTION SITE, AS DIRECTED BY THE ENGINEER.

Notify the road design section how much excess excavation is available, and determine if the excess excavation is needed for backfilling or other roadwork.

If the material is suitable and can be used by another contractor at the site, include this note in the plan; otherwise the contractor must dispose of the material in accordance with the Standard Specifications [IDOT SS 2402.03, G]. This note is typically used when backfilling is done using flowable mortar.

E662: Excavation, rock encountered

IT IS ANTICIPATED THAT ROCK MAY BE ENCOUNTERED WHEN CONSTRUCTING THIS BOX CULVERT. IF IT IS ENCOUNTERED IN THE AREA OF THE FLOOR OF THE CULVERT, THE ROCK IS TO BE REMOVED AT LEAST TO THE BOTTOM OF THE FLOOR OF THE CULVERT. IF IT IS ENCOUNTERED IN THE AREA OF THE APRON CURTAIN WALLS, THE CURTAIN WALL IS TO EXTEND INTO THE ROCK A MINIMUM OF 6". SEE DETAILS IN THESE PLANS.

This note is to be used if Class 23 excavation is bid for earth removal.

The culvert design should be investigated to determine if the rock at the bottom of floor elevation creates a worse condition than the design assumptions made by the culvert design program. If stress conditions are worse, over excavation to 1' below the bottom of floor and backfilling with granular backfill should be considered.

E663: Excavation, Class 20 assumption

THE CLASS 20 EXCAVATION QUANTITY IS BASED ON THE ASSUMPTION THAT AT THE START OF CULVERT CONSTRUCTION, THE EXISTING GROUNDLINE SHOWN ON THE "SITUATION PLAN" FOR THIS DESIGN HAS REMAINED UNDISTURBED AND NO ROADWAY FILL HAS BEEN PLACED.

Use this note on all plans that will have roadway fill placed as part of another contract.

E670: Temporary shoring, culvert extensions

SINCE THE HIGHWAY WILL NOT BE CLOSED TO TRAFFIC DURING THIS CONSTRUCTION, THE CONTRACTOR MAY FEEL TEMPORARY SHORING (SHEET PILE OR OTHER) IS NECESSARY TO ENSURE THAT THE SHOULDER WILL NOT SLOUGH IN WHILE CULVERT IS BEING EXTENDED. HOWEVER, IF FOR ANY REASON SUCH SHORING IS DEEMED NECESSARY, THE CULVERT CONTRACTOR SHALL SUBMIT A SHORING PLAN TO THE ENGINEER FOR APPROVAL. COST OF SHORING, IF REQUIRED, WILL BE CONSIDERED INCIDENTAL TO CONSTRUCTION AND NO DIRECT PAYMENT WILL BE MADE. THEREFORE, ALL MATERIAL USED FOR SHORING SHALL REMAIN THE PROPERTY OF THE CONTRACTOR. IN ADDITION TO THE REQUIREMENTS NOTED ABOVE, ARTICLE 1107.07, OF THE STANDARD SPECIFICATIONS, STILL APPLIES.

Use this note for culvert extensions.

E680: Backfill, flowable mortar

THE CULVERT SHALL BE BACKFILLED WITH FLOWABLE MORTAR. FOR FLOWABLE MORTAR DETAILS AND OTHER ROAD WORK SEE ROAD SHEETS IN THESE PLANS.

Check with the Design Bureau to determine if flowable mortar is to be used as backfill.

E685: Precast, bridge replacements

THE CONTRACTOR SHALL SUBMIT A PRECAST BOX INSTALLATION PLAN FOR REVIEW. THE PRECAST BOX INSTALLATION PLAN SHALL COVER METHOD OF PLACEMENT FOR BOX SECTIONS INSTALLED UNDER THE EXISTING BRIDGE. THE CONTRACTOR SHALL NOT PROCEED WITH PRECAST BOX INSTALLATION WITHOUT NOTICE TO PROCEED FROM THE ENGINEER.

THE PRECAST BOX INSTALLATION SUBMITTAL SHALL INCLUDE:

- METHOD OF INSTALLATION (E.G. LIFTING, SLIDING, ETC.)
- EQUIPMENT TO MOVE BOXES
- BOX ATTACHMENT LOCATIONS AND BOX ATTACHMENT DETAILS FOR MOVING OPERATIONS
- TEMPORARY AND PERMANENT SUPPORT SURFACE DETAILS AND LIMITS FOR BOXES

PRECAST BOX INSTALLATION SUBMITTAL AND ALL MATERIAL USED TO PERFORM THE INSTALLATION SHALL BE INCIDENTAL TO THE PRECAST CONCRETE BOX CULVERT BID ITEM.

Additional information can be found in BDM Article 7.3.4.2.3.

E690: Precast, headwall and box option

THE CULVERT CONTRACTOR MAY USE PRECAST BOX SECTIONS AND PRECAST HEADWALLS INSTEAD OF THE CAST IN PLACE SECTIONS AND HEADWALLS SHOWN ON THE PLANS. BEFORE BEGINNING CONSTRUCTION THE CONTRACTOR SHALL SUBMIT DETAILS OF THE PROPOSED PRECAST BOX SECTIONS AND HEADWALLS TO THE ENGINEER FOR APPROVAL. THE DETAILS SHALL INCLUDE THE FOLLOWING:

A. THE HEADWALL SHALL INCLUDE A PARAPET AT LEAST 1'-0 WIDE EXTENDING A MINIMUM OF 1'-O ABOVE TOP OF SLAB.

B. HEADWALL WINGS MAY BE PARALLEL RATHER THAN FLARED. THE TOP OF WINGWALL BEGINS AT THE TOP OF PARAPET AND SLOPES DOWNWARD TO THE END OF APRON. AT THE END OF APRON THE TOP OF WINGWALL IS TO BE TWO FEET ABOVE FLOW LINE ELEVATION. FOR O° SKEW CULVERTS THE SLOPE OF WINGWALL SHALL BE THREE HORIZONTAL TO ONE VERTICAL.

C. THE CURTAIN WALL SHALL BE THE SAME WIDTH AND EXTEND THE SAME DISTANCE BELOW FLOW LINE AS THE CURTAIN WALL FOR THE CAST IN PLACE BOX SHOWN ON THE PLANS.

D. WHEN PARALLEL WINGWALLS ARE USED, THE CLEAR SPAN DISTANCE OF THE PRECAST BOX SHALL BE INCREASED TO ONE FOOT GREATER THAN THE SPAN OF THE CAST IN PLACE BOX SHOWN ON THE PLANS.

E. WHEN THE CULVERT IS CONSTRUCTED ON A SKEW TO THE CENTERLINE OF ROADWAY, THE BACK TO BACK OF PARAPET DIMENSION SHALL BE LENGTHENED. THE DISTANCE BETWEEN THE PARAPET CORNERS CLOSEST TO THE CENTERLINE OF ROADWAY SHALL EQUAL OR EXCEED THE BACK TO BACK OF PARAPET DIMENSION SHOWN ON THE PLANS. THE WINGWALLS OF SKEWED CULVERTS SHALL EXTEND TO A POINT WHERE THE END OF APRON CLOSEST TO THE CENTERLINE OF ROADWAY COINCIDES WITH A POINT TWO FEET ABOVE THE TOE OF THREE HORIZONTAL AND ONE VERTICAL FORESLOPE.

THE CONTRACTOR SHALL ALLOW TEN WORKING DAYS FOR THE ENGINEER'S REVIEW. FOR CONSTRUCTING THE PRECAST ALTERNATE THE CONTRACTOR WILL BE PAID THE UNIT BID PRICES FOR THE PLAN QUANTITIES OF STRUCTURAL CONCRETE AND REINFORCING STEEL.

The Specification Committee removed the option of using precast box culverts in 1995. (Reference Specification Committee minutes dated May 11, 1995.) The contractor may submit a value engineering proposal. Do not use this note unless specifically directed to do so. This note does not meet current Bureau policy and remain in the listing for history only.

On Primary and Interstate system projects, the use of precast barrel sections and precast headwalls for box culverts may be allowed provided the following criteria are met:

1. Only on new single box culverts

2. The fill height must be greater than 2 ft and less than 20 ft.

3. The expected settlement must be less than 0.5 feet.

13.8 Bridge substructure

These notes are placed on the pier details sheets and on the abutment details sheets.

13.8.1 Index

Abutment concrete
- Construction joints, keyways E802
- Expansion device, stub E803
- Mask wall, stub E801
- Minimum clearance E800

Abutment construction sequence
- Stub E830

Abutment piles
- H-pile points E821
- LRFD contract length and resistance E818
- LRFD driving and construction control E819

Abutment subdrains
- Integral and slab E831B
- Stub E831A

Bearing Resistance
- Nominal Bearing Resistance E835

Drilled shafts
- Rock socket grooving not required E740
- Diameter E745
- Casing design E748
- Downdrag E750

Excavate and dewater
- Pier footings E832
- Working Day Water Elevation E836

Pier anchor bolts
- Preset E730

Pier caps
- Early formwork removal permitted E735A
- Early formwork removal prohibited E735B

Pier columns
- Construction joint E715

Pier concrete
- Construction joints, keyways E701
- Minimum clearance E700

Pier piles
- Battered pile cutoff E724
- Driving over waterways E834
- Encasement, pile bents E723
- H-pile points E722

LRFD contract length and resistance E718
LRFD driving and construction control E719
Pier spread footings
Bearing, hard rock E721A
Bearing, soft rock E721B
Shale E721C
Pier reinforcing
Bar shift at anchor bolts E710
Column spiral E711
Column tie option E712
Column spiral reinforcement grade E713
Column tie option, not permissible E714
Pile downdrag
New earth fill E833

13.8.2 Listing

E700: Pier concrete, minimum clearance

MINIMUM CLEAR DISTANCE FROM FACE OF CONCRETE TO NEAR REINFORCING BAR IS TO BE 2" UNLESS OTHERWISE NOTED OR SHOWN.

E701: Pier concrete, construction joints, keyways

CONSTRUCTION JOINTS ARE TO BE FORMED WITH A 3 x 10 x * DRESSED AND BEVELED STRIP.

This note is to be used to key the columns of a T-pier to the cap and footing.

Length dimension shall be 5' less than out to out of shaft.

E710: Pier reinforcing, bar shift at anchor bolts

REINFORCING BARS MAY BE SHIFTED SLIGHTLY TO CLEAR ANCHOR BOLTS.

To be used when anchor bolts for bearings are to be preset in pier cap. Refer to note E730.

E711: Pier reinforcing, column spiral

SPIRAL REINFORCING IS TO BE NO. XXXX BAR WITH XXXX" DIAMETER, 12" PITCH WITH 4 EQUALLY SPACED L 7/8 x 7/8 x 1/8 SPACERS PUNCHED TO HOLD SPIRALS. SPIRALS ARE TO HAVE 1 1/2 EXTRA TURNS AT TOP AND BOTTOM COLUMNS.

THE SPIRAL REINFORCING MAY BE SPLICED BY LAPPING XXXX. THE LENGTH OF THE SPIRAL SHOWN DOES NOT INCLUDE THE LAPPED LENGTH OF THE SPLICES. THE COST OF THE LAPS AT SPLICES IS TO BE INCLUDED IN THE PRICE BID FOR OTHER REINFORCEMENT.

Use this note only with a 12" pitch spiral. Fill in bar size, column diameter, and lap length. Spiral reinforcement will typically consist of a No. 4 bar without epoxy coating and a 2’-1” lap.

E712: Pier reinforcing, column tie option

COLUMN TIES SPACED AT 12" CENTERS MAY BE SUBSTITUTED FOR THE SPIRAL REINFORCEMENT. PAYMENT WILL BE BASED ON THE WEIGHT OF SPIRAL REINFORCEMENT. NO ADJUSTMENTS IN REINFORCING STEEL PAY WEIGHT WILL BE ALLOWED. SEE BENT BAR DETAILS FOR SPLICE LAP LENGTH.

Use this note for columns with spirals with a 12" pitch. See the column detailing article [BDM 6.6.4.1.2.2].

E713: Pier reinforcing, column spiral reinforcement grade

ARTICLE 4151.03, A, 2, OF THE STANDARD SPECIFICATIONS SHALL NOT BE PERMITTED FOR SPIRAL REINFORCEMENT.

Use this note for columns with spirals if Grade 60 spiral reinforcement is required by design. Including this note will prevent possible substitution with Grade 40 reinforcement.

E714: Pier reinforcing. Column tie option, not permissible

SUBSTITUTION OF COLUMN TIES (HOOPS) IS NOT PERMITTED.

Use this note for spirally designed columns with spirals at 3" pitch. Substitution of column ties would result in an unconservative design.

E715: Pier columns, construction joint

PERMISSIBLE CONSTRUCTION JOINTS MAY BE USED TO PLACE CONCRETE FOR THE PIER COLUMNS IN TWO STAGES. THE PERMISSIBLE CONSTRUCTION JOINTS, IF USED, SHALL BE PLACED MIDWAY BETWEEN THE e1 COLUMN HOOP BARS ANYWHERE IN THE COLUMN. d1 VERTICAL COLUMN BARS MAY BE SPLICED WITH ONE LAP AT THE PERMISSIBLE CONSTRUCTION JOINT. THE MINIMUM LENGTH OF THE LAP SPLICE SHALL BE ?? . PAYMENT FOR d1 REINFORCING BARS SHALL BE BASED ON NO SPLICES, AND NO ALLOWANCE SHALL BE MADE FOR THE ADDITIONAL LENGTH OF BAR REQUIRED FOR THE USE OF SPLICES.

Use this note only if pier height exceeds 40 feet.

E718: Pier piles, LRFD contract length and resistance

THE CONTRACT LENGTH OF ___ FEET FOR THE PIER ___ PILES IS BASED ON A ___ SOIL CLASSIFICATION, A TOTAL FACTORED AXIAL LOAD PER PILE (PU) OF ___ KIPS, AND A GEOTECHNICAL RESISTANCE FACTOR (PHI) OF ___ FOR SOIL AND ___ FOR ROCK END BEARING. TO ACCOUNT FOR SOIL CONSOLIDATION UNDER THE NEW FILL, THE FACTORED AXIAL LOAD INCLUDES A FACTORED DOWNDRAG LOAD OF ___ KIPS. PIER PILES ALSO WERE DESIGNED FOR A FACTORED TENSION FORCE OF ___ KIPS.

THE NOMINAL AXIAL BEARING RESISTANCE FOR CONSTRUCTION CONTROL WAS DETERMINED FROM A ___ SOIL CLASSIFICATION AND A GEOTECHNICAL RESISTANCE FACTOR (PHI) OF ___ FOR SOIL AND ___ FOR ROCK END BEARING. PILES ARE ASSUMED TO BE DRIVEN FROM A START ELEVATION AT THE ___. DESIGN SCOUR (200-YEAR) WAS ASSUMED TO AFFECT THE UPPER ___ FEET OF EMBEDDED PILE LENGTH AND CAUSE ___ KIPS OF DRIVING RESISTANCE.

1. Fill in the contract length (ft).
2. Fill in pier number (1, 2…) or delete the blank if the note covers all piers.
3. Fill in soil classification for design (cohesive, mixed, or non-cohesive).
4. Fill in the total factored axial load per pile (P_u, kips).
5. Fill in the resistance factor (phi) for design in soil. If piles are to be driven to rock, add the resistance factor (phi) for rock; otherwise, delete the end of the sentence beginning with “for”. If piles are designed for rock bearing alone, delete ___ FOR SOIL AND.
6. If piles are subject to downdrag, fill in the factored downdrag load (P_u, kips).
7. If piles were designed for tension, fill in the factored tension force; otherwise delete the sentence.
8. Fill in soil classification for construction control (cohesive, mixed, or non-cohesive).

9. Fill in the resistance factor for construction control (phi).
10. Fill in location for start of pile driving (BOTTOM OF FOOTING for piers, BOTTOM OF PREBORE if prebore is present, BOTTOM OF PILE ENCASEMENT for steel H-pile bents, PROPOSED GROUND ELEVATION or STREAMBED ELEVATION as appropriate for pipe and prestressed pile bents).
11. If piles were designed for scour, fill in the affected embedded length (ft); otherwise, delete the sentence.
12. Revise this note for special conditions not covered above.
13. For steel H-pile bents include the sentence below at the end of the 2nd paragraph. In general, the optional start elevation for pile driving is assumed to be proposed ground elevation rather than existing ground elevation.

IF THE CONTRACTOR ELECTS TO DRIVE PILES FROM A START ELEVATION OF ___ THEN AN ADDITIONAL EMBEDDED PILE LENGTH OF ___ FEET CAUSES ___ KIPS OF ADDITIONAL DRIVING RESISTANCE.

Modify notes 10 and 13 as necessary to fit special conditions.

E719: Pier piles, LRFD driving and construction control

THE REQUIRED NOMINAL AXIAL BEARING RESISTANCE FOR PIER ___ PILES IS ___ TONS AT END OF DRIVE. IF RETAPS ARE NECESSARY TO ACHIEVE BEARING THE REQUIRED NOMINAL AXIAL BEARING RESISTANCE IS ___ TONS AT ONE-DAY RETAP, ___ TONS AT THREE-DAY RETAP, OR ___ TONS AT SEVEN-DAY RETAP. THE PILE CONTRACT LENGTH SHALL BE DRIVEN AS PER PLAN UNLESS PILES REACH REFUSAL. IN NO CASE SHALL A PILE BE EMBEDDED LESS THAN ___ FEET. CONSTRUCTION CONTROL REQUIRES A WEAP ANALYSIS WITH BEARING GRAPH.

1. Fill in pier number (1, 2…) or delete the blank if the note covers all piers.
2. Fill in end of drive bearing (tons).
3. For cohesive sites with consideration of setup, fill in applicable retap blanks. If only one-day retap is different, delete three-day and seven day-retap parts of the sentence. For cohesionless or mixed sites, piles driven to rock, or other cases with no difference in EOD and retap value, delete the retap sentence and add OR RETAP to the end of the first sentence.
4. If retap is specifically required for construction control, substitute the following sentence.
   - PILES SHALL BE RETAPPED AT ___ DAYS WITH A REQUIRED NOMINAL AXIAL BEARING RESISTANCE OF ___ TONS.
5. For timber piles replace the contract length sentence with the following:
   - THE PILE CONTRACT LENGTH SHALL BE DRIVEN AS PER PLAN UNLESS PILES REACH A DRIVING LIMIT OF 160 TONS.
6. If piles are subject to tension, scour, or other conditions requiring a minimum embedment length, fill in the length; otherwise delete the sentence.
7. Replace the construction control sentence if a method other than WEAP without planned retap is to be used. Alternate sentences are as follows:
   - CONSTRUCTION CONTROL REQUIRES AN IOWA DOT ENR FORMULA.
   - CONSTRUCTION CONTROL REQUIRES PDA/CAPWAP AND A WEAP ANALYSIS WITH BEARING GRAPH.
   - CONSTRUCTION CONTROL REQUIRES A WEAP ANALYSIS WITH BEARING GRAPH AND A RETAP AT ___ DAYS AFTER EOD.
8. Revise this note for special conditions not covered above.

E721A: Pier spread footings, bearing, hard rock

THE DESIGN BEARING PRESSURE FOR THE FOOTINGS ON _____ IS _____ TONS PER SQ.FT. FOOTINGS TO EXTEND AT LEAST 12" INTO _____ WITH THE FINAL 12" OF EXCAVATION TO BE TO NEAT LINES OF THE FOOTING.

Use this note for hard rock installation, limestone or cemented sandstone. Use the actual name of rock given in soundings. Consult with the Soils Design Section for allowable bearing value.

E721B: Pier spread footings, bearing, soft rock

THE DESIGN BEARING PRESSURE FOR THE FOOTINGS ON _____ IS __ TONS PER SQ.FT. FOOTINGS TO EXTEND AT LEAST 18" INTO _____ WITH THE FINAL 12" OF EXCAVATION TO NEAT LINES OF THE FOOTING.

This note is to be used for soft rock such as uncemented sandstone or siltstone. Consult with the Soils Design Section for allowable bearing value.

E721C: Pier spread footings, shale

FOOTINGS ARE TO EXTEND AT LEAST 18" INTO SOUND SHALE WITH THE FINAL 12" OF EXCAVATION TO BE TO NEAT LINES OF THE FOOTING. FOOTING CONCRETE IS TO BE PLACED NOT LATER THAN THE DAY FOLLOWING EXCAVATION OF ANY PORTION OF THE FOOTING AREA TO FINAL ELEVATION. THE FOUNDATION SHALL BE KEPT DRY DURING THE PERIOD BETWEEN FINAL EXCAVATION AND PLACING OF THE FOOTING CONCRETE.

The time limit for exposure of shale is used due to deterioration of shale when exposed to air.

E722: Pier piles, H-pile points

STEEL PILE POINTS ARE REQUIRED FOR THE STEEL H-PILES AT THE PIERS.

Pile points are used to penetrate boulders or to anchor piles into steeply inclined bedrock. If pile points are used, the recommendations should come from the Soils Design Section.

E723: Pier piles, encasement, pile bents

THE PIER PILE ENCASEMENTS ARE TO BE AS DETAILED AND NOTED ON IOWA D.O.T. STANDARD ____, AS SHOWN IN THESE PLANS. THE UNIT PRICE BID FOR ENCASEMENT SHALL BE FULL PAYMENT FOR FURNISHING AND PLACING ALL MATERIAL AND NECESSARY EXCAVATION. THE PILING ENCASEMENTS ARE TO EXTEND FROM THE BOTTOM OF PIER CAP TO ELEVATION SHOWN.

Use this note for individual encasement [BDM 6.6.4.2.2] of steel H piles, and insert the appropriate standard, P10L or P10A.

E724: Pier piles, battered pile cutoff

ALL BATTERED PILE SHALL BE TRIMMED TO A HORIZONTAL LINE TO AID IN THE PLACEMENT OF REINFORCING.

Use this note when footing reinforcement is placed directly above battered H-piles, pipe piles, or timber piles in pier footings. Do not use this note for battered prestressed concrete piles.

E730: Pier anchor bolts, preset

ANCHOR BOLTS ARE TO BE PRESET IN PIERS IN ACCORDANCE WITH ARTICLE 2405.03, H, 2, OF THE STANDARD SPECIFICATIONS. THE WEIGHT OF ANCHOR BOLTS IS INCLUDED IN THE STRUCTURAL STEEL QUANTITY.

The preferred method of setting anchor bolts is in drilled holes in accordance with the Standard Specifications [IDOT SS 2405.03, H, 2]. Preset the anchor bolts and include this note only if drilling is not desirable, such as very tight rebar spacing in the pier cap.

Do not preset anchor bolts in two adjacent piers unless provisions are made for construction inaccuracies and adjustments.

E735A: Pier caps, early formwork removal permitted

FORMS FOR PIER CAPS ON PIERS _____ MAY BE REMOVED WITH THE APPROVAL OF THE ENGINEER WHEN THE FOLLOWING TWO CONDITIONS HAVE BEEN MET:

- PIER CAP CONCRETE HAS BEEN IN PLACE FOR A MINIMUM OF 2 CALENDAR DAYS EXCLUDING DAYS THAT THE CONCRETE SURFACE IS SUBJECTED TO TEMPERATURES AT OR BELOW 40° F AND
- THE PIER CAP CONCRETE COMPRESSIVE STRENGTH IS AT LEAST 2500 PSI.

MINIMUM CONCRETE COMPRESSIVE STRENGTH OF 2500 PSI SHALL BE VERIFIED BY FLEXURAL STRENGTH ACCORDING TO MATERIALS I.M. 316 WITH A MINIMUM FLEXURAL STRENGTH OF 450 PSI OR BY THE MATURITY METHOD ACCORDING TO MATERIALS I.M. 383. CURING OF PIER CAP CONCRETE SHALL BE IN ACCORDANCE WITH THE STANDARD SPECIFICATIONS. PIER CAP CONCRETE SHALL BE SUBJECTED TO EXTERIOR LOADS IN ACCORDANCE WITH ARTICLE 2403.03, N, 2 OF THE STANDARD SPECIFICATIONS.

Insert the pier number(s) into the note to designate which pier caps may have forms removed early. The designer shall specifically call out which piers, if any, may have pier cap forms removed early and which ones, if any, shall not (see E735B). This note only applies to typical frame and T-pier caps. Pile bent caps, abutment caps and V-pier caps are not considered under this note. The designer shall verify the capacity of the pier cap for early form removal. If necessary, modify concrete strengths and flexural strengths.

E735B: Pier caps, early formwork removal prohibited

FORMS FOR PIER CAPS ON PIERS _____ SHALL BE REMOVED IN ACCORDANCE WITH THE STANDARD SPECIFICATIONS. EARLY FORM REMOVAL IS PROHIBITED.

Insert the pier number(s) into the note to designate which pier caps shall not have forms removed early. The designer shall specifically call out which piers, if any, shall not have pier cap forms removed early and which ones, if any, may (see E735A). This note shall be included on all projects involving frame piers and T-piers when E735A is not used.

E740: Drilled shafts, rock socket grooving not required

DRILLED SHAFT ROCK SOCKETS SHALL BE BRUSHED BUT SHALL NOT BE GROOVED.

Use this note for sockets in hard rock, as determined by the Soils Design Section. See also BDM C6.3.4.

E745: Drilled shafts, diameter

THE CONTRACT LENGTH OF THE DRILLED SHAFTS IS BASED ON AN AS-CONSTRUCTED SHAFT DIAMETER NOT EXCEEDING ___. IF THE EXCAVATION DIAMETER EXCEEDS THIS VALUE DURING CONSTRUCTION, THE ENGINEER MUST BE CONTACTED TO DETERMINE IF MODIFICATIONS TO THE DRILLED SHAFT DESIGN ARE NECESSARY. THE CONTRACTOR SHALL BE RESPONSIBLE FOR ALL COSTS ASSOCIATED WITH MODIFYING THE DRILLED SHAFT DESIGN TO ACCOUNT FOR SHAFT DIAMETER EXCEEDING THE MAXIMUM VALUE NOTED IN THE PLANS.

Fill in the size of the shaft diameter above the rock socket for which the shaft dead load was based on. Typically, this will be the 12 inches larger than the nominal shaft diameter above the rock socket. See BDM 6.3.4.

AN AS-CONSTRUCTED SHAFT DIAMETER LARGER THAN ___ SHALL NOT EXTEND ABOVE THE STREAM BED DUE TO HYDRAULIC CONSIDERATIONS.

Include this note for drilled shafts in waterways. Shaft diameters larger than what were assumed in the hydraulic analysis can adversely affect the bridge hydraulics and may not be permitted.

E748: Drilled shafts, casing design

THE CONTRACTOR IS RESPONSIBLE FOR THE DESIGN OF ALL DRILLED SHAFT TEMPORARY CASING AND PERMANENT CASING AS NEEDED FOR THIS PROJECT.

E750: Drilled shafts, downdrag

THE DRILLED SHAFTS FOR THIS PROJECT ARE DESIGNED TO RESIST DOWNDRAG FORCES CAUSED BY SETTLEMENT WITHIN THE COMPRESSIBLE SOIL LAYERS. THE DOWNDRAG FORCES APPLIED TO THE SHAFT ARE DEPENDENT ON THE SHAFT DIAMETER. THE CONTRACT LENGTH OF THE DRILLED SHAFTS IS BASED ON AN AS-CONSTRUCTED SHAFT DIAMETER NOT EXCEEDING ___. IF THE EXCAVATION DIAMETER EXCEEDS THIS VALUE DURING CONSTRUCTION, THE ENGINEER MUST BE CONTACTED TO DETERMINE IF MODIFICATIONS TO THE DRILLED SHAFT DESIGN ARE NECESSARY. THE CONTRACTOR SHALL BE RESPONSIBLE FOR ALL COSTS ASSOCIATED WITH MODIFYING THE DRILLED SHAFT DESIGN TO ACCOUNT FOR SHAFT DIAMETER EXCEEDING THE MAXIMUM VALUE NOTED IN THE PLANS.

Fill in the size of the shaft diameter for which downdrag was considered. Typically this will be 12 inches larger than the nominal shaft diameter above the rock socket. See BDM 6.3.4.

E800: Abutment concrete, minimum clearance

MINIMUM CLEAR DISTANCE FROM FACE OF CONCRETE TO NEAR REINFORCING BAR IS TO BE 2" UNLESS OTHERWISE NOTED OR SHOWN.

E801: Abutment concrete, mask wall, stub

THE MASKWALL IS TO BE POURED BEFORE THE SUPERSTRUCTURE SLAB IS POURED.

Use this note for stub abutments.

E802: Abutment concrete, construction joints, keyways

CONSTRUCTION JOINT KEYWAYS ARE TO BE FORMED WITH BEVELED 2 x 8's, EXCEPT AS NOTED.

Keyways shall preferably be indicated in details and not in notes.

E803: Abutment concrete, expansion device, stub

THE PORTION OF THE BACKWALL CONTAINING THE ABUTMENT ANCHORAGE OF THE EXPANSION DEVICE IS TO BE PLACED AFTER THE BRIDGE DECK IS PLACED.

Use this note for stub abutments. The construction sequence allows for proper setting of the expansion joint.

E818: Abutment piles, LRFD contract length and resistance

THE CONTRACT LENGTH OF ___ FEET FOR THE ___ ABUTMENT PILES IS BASED ON A ___ SOIL CLASSIFICATION, A TOTAL FACTORED AXIAL LOAD PER PILE (PU) OF ___ KIPS, AND A GEOTECHNICAL RESISTANCE FACTOR (PHI) OF ___ FOR SOIL AND ___ FOR ROCK END BEARING. TO ACCOUNT FOR SOIL CONSOLIDATION UNDER THE NEW FILL, THE FACTORED AXIAL LOAD INCLUDES A FACTORED DOWNDRAG LOAD OF ___ KIPS. ABUTMENT PILES ALSO WERE DESIGNED FOR A FACTORED TENSION FORCE OF ___ KIPS.

THE NOMINAL AXIAL BEARING RESISTANCE FOR CONSTRUCTION CONTROL WAS DETERMINED FROM A ___ SOIL CLASSIFICATION AND A GEOTECHNICAL RESISTANCE FACTOR (PHI) OF ___ FOR SOIL AND ___ FOR ROCK END BEARING. PILES ARE ASSUMED TO BE DRIVEN FROM A START ELEVATION AT THE BOTTOM OF ___. DESIGN SCOUR (200-YEAR) WAS ASSUMED TO AFFECT THE UPPER ___ FEET OF EMBEDDED PILE LENGTH AND CAUSE ___ KIPS OF DRIVING RESISTANCE.

1. Fill in the contract length (ft).
2. Fill in abutment location (north, east, south, or west) or delete the blank if the note covers both abutments.
3. Fill in soil classification for design (cohesive, mixed, or non-cohesive).
4. Fill in the total factored axial load per pile (P_u, kips).
5. Fill in the resistance factor (phi) for design in soil. If piles are to be driven to rock, add the resistance factor (phi) for rock; otherwise, delete the end of the sentence beginning with “FOR”. If piles are designed for rock bearing alone, delete ___ FOR SOIL AND.
6. If piles are subject to downdrag, fill in the factored downdrag load (P_u, kips).
7. If piles were designed for tension, fill in the factored tension force; otherwise delete the sentence.
8. Fill in soil classification for construction control (cohesive, mixed, or non-cohesive).
9. Fill in the resistance factor for construction control (phi).
10. Fill in location for start of pile driving (FOOTING for abutments with no prebore, PREBORE if prebore is present).
11. If piles were designed for scour, fill in the affected embedded length (ft); otherwise, delete the sentence.
12. Revise this note for special conditions not covered above.

E819: Abutment piles, LRFD driving and construction control

THE REQUIRED NOMINAL AXIAL BEARING RESISTANCE FOR ___ ABUTMENT PILES IS ___ TONS AT END OF DRIVE. IF RETAPS ARE NECESSARY TO ACHIEVE BEARING, THE REQUIRED NOMINAL AXIAL BEARING RESISTANCE IS ___ TONS AT ONE-DAY RETAP, ___ TONS AT THREE-DAY RETAP, OR ___ TONS AT SEVEN-DAY RETAP. THE PILE CONTRACT LENGTH SHALL BE DRIVEN AS PER PLAN UNLESS PILES REACH REFUSAL. IN NO CASE SHALL A PILE BE EMBEDDED LESS THAN ___ FEET. CONSTRUCTION CONTROL REQUIRES A WEAP ANALYSIS WITH BEARING GRAPH.

1. Fill in abutment location (north, east, south, or west) or delete the blank if the note covers both abutments.
2. Fill in end of drive bearing (tons).
3. For cohesive sites with consideration of setup, fill in applicable retap blanks. If only one-day retap is different, delete three-day and seven day-retap parts of the sentence. For cohesionless or mixed sites, piles driven to rock, or other cases with no difference in EOD and retap value, delete the retap sentence and add OR RETAP to the end of the first sentence.
4. If retap is specifically required for construction control, substitute the following sentence:
   - PILES SHALL BE RETAPPED AT ___ DAYS WITH A REQUIRED NOMINAL AXIAL BEARING RESISTANCE OF ___ TONS.
5. For timber piles, replace the contract length sentence with the following:
   - THE PILE CONTRACT LENGTH SHALL BE DRIVEN AS PER PLAN UNLESS PILES REACH A DRIVING LIMIT OF 160 TONS.
6. If piles are subject to tension, scour, or other condition requiring a minimum embedment length, fill in the length (ft); otherwise, delete the sentence.
7. Replace the construction control sentence if a method other than WEAP without planned retap is to be used. Alternate sentences are as follows:
   - CONSTRUCTION CONTROL REQUIRES AN IOWA DOT ENR FORMULA.

- CONSTRUCTION CONTROL REQUIRES PDA/CAPWAP AND A WEAP ANALYSIS WITH BEARING GRAPH.
- CONSTRUCTION CONTROL REQUIRES A WEAP ANALYSIS WITH BEARING GRAPH AND A RETAP AT ___ DAYS AFTER EOD.

8. Revise this note for special conditions not covered above.

E821: Abutment piles, H-pile points

STEEL PILE POINTS ARE REQUIRED FOR THE STEEL H-PILES AT THE ABUTMENTS.

Steel pile points are sometimes used to penetrate a layer of boulders or to anchor into steeply inclined bedrock. Pile points should not be indicated on the plans unless recommended by the Soils Design Section.

E830: Abutment construction sequence, stub

BEAMS AND MASONRY PLATES ARE TO BE SET BEFORE BACKWALL IS PLACED.

Use this note for stub abutments.

E831A: Abutment subdrains, stub

THE COST OF RESILIENT JOINT FILLER, FURNISHING AND PLACING SUBDRAIN (INCLUDING EXCAVATION), FLOODABLE BACKFILL, POROUS BACKFILL, AND COST OF FURNISHING AND PLACING CONCRETE SEALER IS TO BE INCLUDED IN THE PRICE BID FOR "STRUCTURAL CONCRETE".

Use this note for stub abutments. See the Standard Specifications [IDOT SS 2403.05].

E831B: Abutment subdrains, integral and slab

THE COST OF FURNISHING AND PLACING SUBDRAIN (INCLUDING EXCAVATION), FLOODABLE BACKFILL AND POROUS BACKFILL IS TO BE INCLUDED IN THE PRICE BID FOR "STRUCTURAL CONCRETE".

Use this note for integral abutment and slabs.

E832: Excavate and dewater, pier footings

THE LUMP SUM BID ITEM, “EXCAVATE AND DEWATER” SHALL INCLUDE ALL COSTS ASSOCIATED WITH THE EXCAVATION AND DEWATERING REQUIRED TO CONSTRUCT THE PIER FOOTINGS IN THE DRY, IN ACCORDANCE WITH SECTION 2405, OF THE STANDARD SPECIFICATIONS. THE LENGTH AND WIDTH OF THE SEAL COAT WAS BASED ON THE REQUIRED ONE FOOT CLEARANCE BETWEEN THE TIP OF THE SHEET PILES AND THE BATTERED PILING. THE CONCRETE SEAL COAT, IF USED, SHALL BE ?? FEET THICK, BASED ON A WATER ELEVATION OF ??. IF THE WATER ELEVATION IS HIGHER THAN ?? AT THE TIME OF CONSTRUCTION, A LARGER SEAL COAT MAY BE REQUIRED TO MAINTAIN THE CLEARANCE BETWEEN THE SHEET PILES AND BATTERED PILING. THE BRIDGE ENGINEER SHALL BE NOTIFIED BEFORE USING A LARGER SEAL COAT.

Use this note when the “Excavate and Dewater” bid item is used. See the seal coat article in the Bridge Design Manual for additional information [BDM 6.6.4.1.4].

E833: Pile downdrag, new earth fill

ABUTMENT (OR PIER) PILES ARE DESIGNED TO ACCOMMODATE DOWNDRAG FORCE DUE TO SOIL CONSOLIDATION UNDER THE NEW EARTH FILL. PILES SHALL BE DRIVEN TO ___ TONS BASED ON THEORETICAL DRIVING RESISTANCE. THIS INCLUDES ___ TONS OF RESISTANCE IN AND ABOVE THE COMPRESSIBLE LAYERS, ___ TONS RESISTANCE FOR DOWNDRAG FORCES AND ___ TONS RESISTANCE FOR DEAD AND LIVE LOAD BEARING CAPACITY.

See the downdrag article [BDM 6.2.2.3].

E834: Pier piles, driving over waterways

PIER PILES ARE DESIGNED TO ACCOMMODATE THE ABSENCE OF SCOURABLE SOILS ABOVE THE 100 YEAR SCOUR ELEVATION SHOWN IN THESE PLANS. PILES SHALL BE DRIVEN TO ?? TONS BASED ON THEORETICAL DRIVING RESISTANCE. THIS INCLUDES ?? TONS OF RESISTANCE IN THE SCOURABLE LAYERS, AND ?? TONS RESISTANCE FOR DEAD AND LIVE LOAD BEARING CAPACITY.

When designing piers supporting bridges over waterways, current design practice is not to count skin friction through layers above the computed 100 year scour elevation, and to develop the required design bearing for the piles below this elevation. To clarify the intentions of our design for the field and to alleviate the need for the Construction and Materials Bureau to adjust the design bearing value given in our plans, we will now be including the driving resistance through the scourable soil layers on our plans in a fashion similar to the driving resistance listed for abutment piles with downdrag.

E835: Bearing Resistance

THE NOMINAL BEARING RESISTANCE FOR _____ FOOTING IS _____ KSF (SERVICE LIMIT STATE) AND _____ KSF (FACTORED LRFD STRENGTH 1 LIMIT STATE).

E836: Working Day Water Elevation

WITH RESPECT TO WORKING DAYS, WATERWAY ELEVATIONS OF <*enter elevation here*> FEET OR BELOW WILL NOT BE CONSIDERED A CONDITION BEYOND THE CONTROL OF THE CONTRACTOR.

The Working Day Water Elevation (WDWE) shall be included on new bridge projects and bridge replacement projects which cross a waterway and which meet one of the following two conditions:

- The Excavate and Dewater bid item is included as part of the plans per BDM 6.6.1.4.4. The use of this bid item implies construction of a pier footing with a seal coat.
- The bridge crosses a meandered stream. The streams in Iowa defined as meander streams are listed in BDM C3.10.1. This condition is independent of pier and foundation type.

The WDWE shall ordinarily be determined as the Excavation Classification Line + 3.00'. The WDWE should not exceed a bank full condition. The WDWE elevation shall be discussed with the District RCE to determine if site conditions warrant establishing a WDWE based on the specific project site conditions. The Designer shall also verify with the RCE and Contracts and Specifications Bureau if the project contract is based on working days or a no excuse completion date. If working days are not included in the contract then the note should be excluded from the plans.

The purpose of the WDWE is to establish a consistent methodology to ensure fair bidding practices based on a reasonable assumption of when the Contractor should be able to suspend work if the controlling item of work is affected. The WDWE is not intended to mandate an elevation for the Contractor's temporary works (e.g. stream access, cofferdams, etc.). Contractors are expected to prepare bids based on their own risk analysis.

13.9 Bridge superstructure

These notes are placed on the superstructure details sheets.

13.9.1 Index

Anchor bolts
Placement E924
Empirical deck
Reinforcing placement E921
Expansion joint
Finger plate concrete placement E910
Prestressed concrete beam bridge
Deck placement E926
Steel bridge
Charpy V-notch E901
Field verify dimensions E900
Minimum temperature for field cutting, drilling, etc. E903
Shop drill option E902
Intended erected position E904
Suggested girder erection sequence E905
Weathering steel E930

13.9.2 Listing

E900: Steel bridge, field verify dimensions

ALL DIMENSIONS AND DETAILS SHOWN IN THESE PLANS PERTINENT TO FABRICATION OF STRUCTURAL STEEL SHALL BE VERIFIED IN THE FIELD BY THE BRIDGE CONTRACTOR BEFORE FABRICATION OF THE STRUCTURAL STEEL.

This note is to be used on all repair widening or remodeling projects requiring fabricating of structural steel.

E901: Steel bridge, Charpy V-notch

CHARPY V-NOTCH TOUGHNESS REQUIREMENTS IN ACCORDANCE WITH ARTICLE 4152.02, OF THE STANDARD SPECIFICATIONS SHALL APPLY TO ALL CROSS FRAMES AND CONNECTION STIFFENERS AT CROSS FRAMES.

This note is to be used where steel girders are designed to be horizontally curved.

This requirement puts us in agreement with the AASHTO Standard Specifications [AASHTO-I 10.20.1], which states that cross frames for horizontally curved steel girder bridges shall be designed as main members.

E902: Steel bridge, shop drill option

THE BRIDGE CONTRACTOR MAY SHOP DRILL ANY CONNECTION THAT IS SHOWN AS FIELD DRILLED IF PERTINENT DIMENSIONS ARE ACCURATELY FIELD MEASURED AND THE BRIDGE CONTRACTOR CAN ENSURE PROPER FIT BETWEEN NEW AND EXISTING STRUCTURAL STEEL.

E903: Steel bridge, minimum temperature for field cutting, drilling, etc.

NO TORCHWORK, CUTTING, GRINDING OR DRILLING OF HOLES ON THE EXISTING STRUCTURAL STEEL OF THE BRIDGE SHALL BE PERFORMED WHEN THE AIR TEMPERATURE AND STEEL TEMPERATURE ARE BELOW 40 °F.

On all repair work involving main members (as defined in the Standard Specifications [IDOT SS 4152.02]) include this note.

E904: Steel bridge, intended erected position

THE GIRDERS ARE TO BE FABRICATED FOR A STEEL DEAD LOAD FIT CONDITION.

Note that horizontally curved girders with an $(L/R)_{max}$ ratio greater than or equal to 0.2 are recommended to be fabricated for a no-load fit condition.

E905: Steel bridge, suggested girder erection sequence

THE SUGGESTED GIRDER ERECTION SEQUENCE SHOWN IN THESE PLANS IS INTENDED FOR PRELIMINARY SCHEMATIC PURPOSES ONLY AND DOES NOT SUPPLANT THE CONTRACTOR'S RESPONSIBILITY FOR THE FABRICATION, ERECTION, AND CONSTRUCTION OF ANY PART OF THE BRIDGE. THE CONTRACTOR MAY CHOOSE AN ALTERNATIVE GIRDER ERECTION SEQUENCE TO THAT PRESENTED IN THE CONTRACT DOCUMENTS. THE CONTRACTOR SHALL BE RESPONSIBLE FOR ENSURING THE STABILITY OF EACH GIRDER DURING ALL PHASES OF ERECTION AS NOTED IN THE SPECIAL PROVISION SP-XX-XX "GIRDER ERECTION PLAN".

Include this note when a suggested girder erection sequence is included in the plans per BDM 5.5.1.4.4. This note assumes the special provisions for the girder erection plan will also be included.

E910: Expansion joint, finger plate concrete placement

CONCRETE SHALL BE FORCED UNDER AND AROUND FINGER PLATE SUPPORTING HARDWARE, STUDS AND BARS. PROPER CONSOLIDATION SHALL BE ACHIEVED BY LOCALIZED INTERNAL VIBRATION.

Include this note with the finger plate details. This note replaces past references to hand packing concrete under the finger plate armor as suggested in AASHTO LRFD C14.5.3.5.

E921: Empirical deck, reinforcing placement

TOP TRANSVERSE REINFORCING STEEL IS TO BE PARALLEL TO AND 2 1/2 INCHES CLEAR BELOW THE TOP OF SLAB. TOP REINFORCING MAT IS TO BE TIED RIGIDLY WITH APPROVED TIES AT 100 PERCENT OF REINFORCING STEEL INTERSECTIONS. THE TOP MAT SHALL BE SUPPORTED BY INDIVIDUAL EPOXY COATED METAL BAR CHAIRS SPACED AT NO MORE THAN 2.0 FEET CENTERS LONGITUDINALLY AND TRANSVERSELY OR BY CONTINUOUS ROWS OF EPOXY COATED METAL BAR HIGH CHAIRS OR SLAB BOLSTERS SPACED NOT MORE THAN 2.0 FEET APART.

BOTTOM TRANSVERSE REINFORCING STEEL IS TO BE PARALLEL TO AND 1 INCH CLEAR ABOVE THE BOTTOM OF SLAB. BOTTOM REINFORCING MAT IS TO BE TIED RIGIDLY WITH APPROVED TIES AT ALTERNATE INTERSECTIONS SO THAT 50 PERCENT OF THE INTERSECTIONS ARE TIED. THE BOTTOM MAT SHALL BE SUPPORTED BY INDIVIDUAL EPOXY COATED METAL BAR CHAIRS SPACED AT NO MORE THAN 2.5 FEET CENTERS LONGITUDINALLY AND TRANSVERSELY OR BY CONTINUOUS ROWS OF EPOXY COATED METAL BAR CHAIRS OR SLAB BOLSTERS SPACED NOT MORE THAN 2.5 FEET APART.

This note is to be included for all LRFD empirical design bridge decks.

E924: Anchor bolts, placement

WELDING OF ANCHOR BOLTS SHALL NOT BE ALLOWED. THE CONTRACTOR SHALL OBTAIN A TEMPLATE FROM THE MANUFACTURER / FABRICATOR FOR PROPER PLACEMENT OF THE ANCHOR BOLTS.

Welding of reinforcing bars to anchor bolts to maintain alignment of the bolts is of concern because the welding may alter material properties of the bolts, possibly causing brittle fractures.

E926: Prestressed concrete beam bridge, deck placement

NOTE: CONCRETE DECK SHALL BE PLACED IN SECTIONS AND SEQUENCES INDICATED. (AN APPROVED ALTERNATE PROCEDURE IS TO PLACE THE CONCRETE DECK IN ONE CONTINUOUS POUR BEGINNING AT ONE END OF THE BRIDGE. << or >> PLACING THE CONCRETE DECK IN ONE CONTINUOUS POUR IS PROHIBITED AND WILL NOT BE CONSIDERED FOR APPROVAL AS AN ALTERNATE PROCEDURE DUE TO << Indicate Reason(s)>>.) ALTERNATE PROCEDURES FOR PLACING DECK CONCRETE MAY BE SUBMITTED FOR APPROVAL TOGETHER WITH A STATEMENT OF THE PROPOSED METHOD AND EVIDENCE THAT THE CONTRACTOR POSSESSES THE NECESSARY EQUIPMENT AND FACILITIES TO ACCOMPLISH THE REQUIRED RESULTS. THE BRIDGE ENGINEER SHALL REVIEW ANY ALTERNATE PROCEDURES. THE COST OF ANY ADDITIONAL ANALYSIS AND PLAN MODIFICATIONS SHALL BE PAID FOR BY THE CONTRACTOR. THE ENGINEER SHALL DETERMINE IF A RETARDING ADMIXTURE IS REQUIRED TO MAINTAIN PLASTICITY OF THE CONCRETE DECK DURING PLACEMENT.

DECK CONCRETE SECTIONS SHALL CURE FOR A MINIMUM OF 48 HOURS AND SHALL ACHIEVE A MINIMUM STRENGTH OF 75% OF THE 28 DAY DECK CONCRETE STRENGTH PRIOR TO REMOVING DECK HEADERS AND BEGINNING AN ADJACENT POUR.

If the total volume of deck concrete is 500 CY or less and the designer has no structural or constructability concerns, then allow the contractor to place the deck in one continuous pour. **Do not explicitly exclude an end-to-end continuous deck pour based on the total volume of deck concrete exceeding 500 CY since larger contractors may want to propose an end-to-end pour as an alternate procedure.** If the continuous deck pour should start at a specific end of the bridge, then modify the note accordingly. If the designer determines a continuous deck pour is not permissible, then explicitly exclude the option in the note with an explanation. The designer must seek approval from the Chief Structural Engineer when a continuous deck pour is specifically prohibited.

If the total volume of deck concrete exceeds 500 CY, then consider allowing a series of sequential pours sized between 300 to 500 CY from one end of the bridge to another in the plan note. See BDM 5.2.4.1.2 and C5.2.4.1.2 for additional information and examples, respectively.

Average deck retarders are pre-approved for about 10 hours. Contractors typically pour concrete decks at a rate of 50 CY per hour which results in the volume limit of 500 CY per pour.

E930: Steel bridge, weathering steel

ALL STRUCTURAL STEEL, EXCEPT AS NOTED, SHALL CONFORM TO ASTM A709 GRADE 50W. THE MINIMUM YIELD POINT FOR GRADE 50W STRUCTURAL STEEL IS 50 KSI FOR PLATES 4 INCHES AND UNDER IN THICKNESS, AND ALL STRUCTURAL SHAPES. THE GRADE 50W STEEL IS A WEATHERING STEEL AND IS TO REMAIN UNPAINTED, EXCEPT AS NOTED.

DECK DRAINS INCLUDING PLATES WELDED TO THE DRAIN FOR DRAIN SUPPORT ARE TO BE GRADE 36 STEEL.

ALL PIECES COMPRISING THE [ABUTMENT AND] PIER BEARINGS SHALL COMPLY WITH THE REQUIREMENTS AS STATED IN THE NOTES ON DESIGN SHEET/S ? & ?.

SHEAR STUDS ARE TO BE OF AN APPROVED TYPE LISTED IN MATERIALS I.M. 453.10, APPENDIX A.

THE FINISH ON DECK DRAINS, BEARINGS AND WEATHERING STEEL SHALL BE IN ACCORDANCE WITH THE PLAN NOTES AND SECTION 2408, OF THE STANDARD SPECIFICATIONS. [ALL WEATHERING STEEL EMBEDDED INTO AN INTEGRAL ABUTMENT SHALL BE PAINTED TO A DISTANCE OF 1 FOOT FROM THE CONCRETE FACE AND SEALED BY CAULKING AT THE ABUTMENT CONCRETE AND STEEL INTERFACE.] EXTERIOR SURFACES OF ALL GALVANIZED COMPONENTS WHICH ARE DESIGNATED IN THE CONTRACT DOCUMENTS TO BE PAINTED SHALL BE PREPARED ACCORDING TO ARTICLE 2509.03, OF THE STANDARD SPECIFICATIONS.

BOLTS FOR USE WITH WEATHERING STEEL SHALL BE A325 TYPE III WITH A563 GRADE DH3 NUTS AND F436 TYPE III WASHERS.

BOLTS USED TO SPLICE GIRDER SECTIONS ARE TO BE INSTALLED SUCH THAT NUTS ARE ON THE INSIDE FACE OF THE GIRDER WEBS FOR THE EXTERIOR GIRDERS, AND ON THE TOP OF BOTH TOP AND BOTTOM FLANGES OF ALL THE GIRDERS.

THE STEEL SHALL BE KEPT FREE OF OIL, GREASE, DIRT, CRAYON OR CHALK MARKS, CONCRETE SPATTER AND ANY OTHER FOREIGN MATTER THAT MAY AFFECT THE NATURAL OXIDATION OF THE STEEL. ANY FOREIGN MATTER REMAINING ON THE STEEL AFTER COMPLETION OF BRIDGE CONSTRUCTION SHALL BE REMOVED BY THE BRIDGE CONTRACTOR AS DIRECTED BY THE ENGINEER. THE RESULTANT SURFACE SHALL BE FREE OF ALL VISIBLE RESIDUES. ALL COSTS ASSOCIATED WITH CLEANING STEEL SURFACES SHALL BE BORNE BY THE BRIDGE CONTRACTOR.

SEAL MATERIAL FOR CAULKING SHALL BE NEUTRAL CURE AND NON SAG SILICONE. TWO PRODUCTS MEETING THESE CRITERIA ARE DOW 888, CRAFCO ROAD SAVER SILICONE, OR CSL342 JOINT SEALANT.

13.10 New and repair bridge detail

These notes are placed on the general notes sheet and on specific detail sheets.

13.10.1 Index

Beam ends
- Sealing E1005

Beam stirrups
- Adjustment E1090
- Extension E1091

Beam strengthening
- Angles E1000
- Shear studs E1001

Bearings
- Bronze plates and neoprene sheets E1010B
- Curved sole plate, welding E1011
- Neoprene sheets E1010A

Conduit
- I.T.S. Conduit E1085

Deck drains
- Material and cost E1050

Deck placement
- Screed rail location E1036

Deck placement sequence

Steel girder E1040A
Steel girder, two span E1040B
Steel girder, unbalanced two span E1040C
Dowels
Installation E1025
Cost E1026
Paving block
Installation and removal E1060
Reinforcing
Mechanical splices, stage construction E1020
Pier spiral E1070
Sheet pile
Material and installation E1030
Temporary barrier rail
Layout E1080

13.10.2 Listing

E1000: Beam strengthening, angles

BEAM STRENGTHENING NOTES:

THE EXISTING _____ BEAMS TO BE STRENGTHENED WITH NEW STEEL __ x __ x __ STRENGTHENING ANGLES IN ACCORDANCE WITH THE FOLLOWING CONSTRUCTION SEQUENCE:

1.THE AREA OF THE EXISTING BEAMS WHICH WILL BE UNDER THE STRENGTHENING ANGLES AND AT LEAST ONE INCH OUTSIDE THE AREAS SHALL BE BLAST CLEANED TO A NEAR-WHITE CONDITION IN ACCORDANCE WITH SECTION 2508, OF THE STANDARD SPECIFICATIONS. VACUUM BLAST SHALL BE USED. IF THE CONTRACTOR RECYCLES THE BLAST MATERIAL, IN NO CASE SHALL THE RECYCLING PROCESS UTILIZE A WET SEPARATION METHOD. CONTAINMENT AND DISPOSAL OF WASTES SHALL BE IN ACCORDANCE WITH SECTION 2508, OF THE STANDARD SPECIFICATIONS.

2. THE PORTION OF THE BLAST-CLEANED SURFACES WHICH WILL BE UNDER THE STRENGTHENING ANGLES AND AN ADDITIONAL ONE INCH OUTSIDE THESE AREAS SHALL BE GIVEN A PRIME COAT OF ZINC SILICATE PAINT IN ACCORDANCE WITH SECTION 2508, OF THE STANDARD SPECIFICATIONS. THE STRENGTHENING ANGLES SHALL RECEIVE THE ZINC SILICATE PRIMER ALSO. THE ZINC SILICATE PAINT SHALL MEET THE REQUIREMENTS OF MATERIALS IM. 482.02 APPENDIX A. CARE SHALL BE TAKEN TO INSURE THAT ZINC SILICATE PRIMER IS APPLIED ONLY ON BLAST-CLEANED STEEL SURFACES AND THAT NONE IS APPLIED OVER OLD PRIMER OR PAINT.

3. RESTRICT TRAFFIC TO ONE LANE OF TWO-WAY TRAFFIC ON THE SIDE OF THE BRIDGE AWAY FROM THE EXTERIOR BEAM BEING STRENGTHENED.

4. FIELD DRILL THE EXISTING I-BEAM WEB FOR 3/4 " DIA. H.S. BOLTS USING THE SHOP DRILLED HOLES IN THE STRENGTHENING ANGLES AS A TEMPLATE, EXCEPT AT DIAPHRAGM CONNECTIONS (NOTE AND DETAIL AS APPROPRIATE).

5. AFTER DRILLING, REMOVE STRENGTHENING ANGLES AND CLEAN ALL BURRS AND CUTTINGS FROM THE STRENGTHENING ANGLES AND BEAM MEMBERS.

6. BOLT THE _____ ANGLE TO THE I-BEAM WITH 3/4 " DIA. H.S. BOLT. FULLY TIGHTEN ALL BOLTS FOR A FRICTION TYPE CONNECTION. DURING THE TIGHTENING OF BOLTS, ALL POSSIBLE EFFORTS SHALL BE MADE BY THE CONTRACTOR TO MINIMIZE THE

AMOUNT OF EQUIPMENT AND SUPPLIES STORED ON THE BRIDGE DECK AS DIRECTED BY THE ENGINEER. TRAFFIC MAY BE RESTORED AFTER ALL BOLTS ARE TIGHTENED.

7. PAINT THE BOLTS, NUTS, ANGLES, AND THE BLAST-CLEANED AREA AROUND IT IN ACCORDANCE WITH SECTION 2508, OF THE STANDARD SPECIFICATIONS, AND WITH THE FOLLOWING ADDITIONS/EXCEPTIONS:

A. REMOVE ANY SILICATE PRIMER APPLIED (IN STEP 2 ABOVE) OVER OLD PRIMER OR PAINT.

B. APPLY EPOXY ALUMINUM PRIMER TO THE ATTACHED ANGLES AND AN ADDITIONAL 3 INCHES OUTSIDE THE ANGLES.

C. APPLY WATERBORNE ACRYLIC PAINT FINISH COAT OVER THE EPOXY ALUMINUM PRIMER. FINAL PAINT COAT SHALL MATCH THE COLOR OF THE EXISTING PAINT.

STRENGTHENING ANGLES SHOULD BE PLACED PRIOR TO PLACEMENT OF ANY OVERLAY OR CAST IN PLACE BARRIER RAIL.

ANY DAMAGE BY THE CONTRACTOR TO PORTIONS OF THE STRUCTURE AND ITS PAINT SYSTEM NOT SPECIFICALLY COVERED BY THE SCOPE OF THESE PLANS SHALL BE REPAIRED OR REPLACED BY THE CONTRACTOR AT THE CONTRACTOR'S EXPENSE.

ALL NEW BOLTS ARE TO BE 3/4 " DIA. H.S. BOLTS AND ALL HOLES ARE TO BE 13/16 " DIA. BOLTS SHALL BE INSTALLED IN ACCORDANCE WITH THE STANDARD SPECIFICATIONS. NO ADDITIONAL DEAD LOADS AND/OR CONSTRUCTION LOADS WILL BE ALLOWED ON THE BRIDGE WHILE BOLTS ARE BEING TORQUED TO SPECIFICATIONS.

THE PRICE BID FOR "STRUCTURAL STEEL" SHALL INCLUDE ALL COSTS ASSOCIATED WITH FURNISHING AND INSTALLING STRENGTHENING ANGLES (INCLUDING FIELD DRILLING EXISTING BEAMS) AS NOTED ABOVE EXCEPT FOR ITEMS INCLUDED IN THE BID ITEMS FOR “BRIDGE CLEANING FOR PAINTING”, “BLAST CLEANING OF STRUCTURAL STEEL”, “CONTAINMENT AND PAINTING OF STRUCTURAL STEEL". CHARPY V NOTCH TESTING IS REQUIRED FOR THE STRENGTHENING ANGLES. ALSO SEE GENERAL NOTES FOR OTHER ITEMS INCLUDED IN STRUCTURAL STEEL.

This series of notes specifies surface preparation, paint application, and construction sequence for the installation of beam strengthening angles for a deck repair and overlay project. Place this series of notes with the details for the strengthening angles, not in the general notes. Modify notes as appropriate. Include notes for paint containment and disposal (E474), painting strengthening angles (E472C), and scrape test (E480) in general notes.

E1001: Beam strengthening, shear studs

SHEAR STUDS WHICH ARE UNACCEPTABLE BY TESTING AFTER ATTACHMENT MAY BE REPAIRED BY ADDING A 5/16 " MINIMUM FILLET WELD IN PLACE OF THE MISSING WELD IN ACCORDANCE WITH OFFICE OF MATERIALS IM 558.

This note should be placed on the plans when old beams (pre-1940) are to be strengthened by adding shear studs.

E1005: Beam ends, sealing

THE PRICE BID ITEM “SEALER COAT-PRESTRESSED CONCRETE BEAM ENDS” SHALL INCLUDE ALL COSTS INCLUDING LABOR AND MATERIAL FOR PREPARING AND SEALING OF THE PRESTRESSED CONCRETE BEAM ENDS AT EACH EXPANSION JOINT LOCATION

TO THE LIMITS SHOWN ON THESE PLANS. THE WORK SHALL BE PAID FOR PER “EACH” BEAM END THAT IS SEALED. SEALANT MATERIAL FOR THE BEAM ENDS SHALL BE FROM THE APPROVED MATERIAL LIST IM 491.19B. THE CONTRACTOR SHALL APPLY THE SEALANT IN ACCORDANCE WITH THE MANUFACTURER’S REQUIREMENTS.

E1010A: Bearings, neoprene sheets

NEOPRENE SHEETS UNDER BEARINGS SHALL BE CONSIDERED INCIDENTAL TO THE STRUCTURAL STEEL BID ITEM.

E1010B: Bearings, bronze plates and neoprene sheets

LUBRICATED BRONZE PLATES AND NEOPRENE SHEETS ARE A PART OF THE SUPERSTRUCTURE STEEL QUANTITY. UNIT PRICE BID FOR "STRUCTURAL STEEL" SHALL INCLUDE ALLOWANCE FOR COST OF BRONZE PLATES.

E1011: Bearings, curved sole plate, welding

AFTER WELDING THE CURVED PLATE TO THE 7 x 3/4 SOLE PLATE, THE WELD AND THE SURROUNDING AREA ARE TO BE CLEANED AND COATED IN ACCORDANCE WITH ASTM DESIGNATION A780-93a. USE "ZINC BASED SOLDERS" SPECIFIED UNDER PARAGRAPH 4.2.1 AND CLEAN AS SPECIFIED IN ANNEXES A1 OF THE SPECIFICATION.

This note is to be used on PPCB bridges when the bearing plate is more than one inch thick and requires a built up sole plate. Place this note adjacent to the detail showing the built up sole plate.

E1020: Reinforcing, mechanical splices, stage construction

THE ___ BARS IN THE ABUTMENT BACKWALLS SHALL BE SPLICED AT THE LOCATIONS SHOWN USING MECHANICAL SPLICE ASSEMBLIES. MECHANICAL SPLICE ASSEMBLIES CONSIST OF MECHANICAL SPLICERS AND REINFORCING SPLICE BARS AS REQUIRED TO FACILITATE THE USE OF THE MECHANICAL SPLICER. THE MECHANICAL SPLICE ASSEMBLY USED SHALL MEET THE REQUIREMENTS OF MATERIALS IM 451 APPENDIX E. REINFORCING SPLICE BARS SHALL BE A MINIMUM OF ____ INCH DIA.

ALL MECHANICAL SPLICE ASSEMBLIES TO BE USED IN SPLICING ___ BARS IN THE ABUTMENT BACKWALLS SHALL BE EPOXY COATED.

THE COST OF ALL SPLICE ASSEMBLIES IS TO BE INCLUDED IN THE PRICE BID FOR "REINFORCING STEEL EPOXY COATED" AND NO SEPARATE PAYMENT WILL BE MADE. THE WEIGHT OF MECHANICAL SPLICE ASSEMBLIES IS NOT INCLUDED IN THE QUANTITY SHOWN FOR "REINFORCING STEEL EPOXY COATED". A TOTAL OF x EPOXY COATED SPLICE ASSEMBLIES WILL BE REQUIRED.

This note is to be used in stage construction of the backwall where space is tight and bars in Stage I construction cannot extend past the construction joint and provide the required lap for Stage II construction. A note similar to this may be used whenever stage construction interferes with Stage I rebar placement (i.e. pier caps, abutment footing, bridge slab adjacent to sheet pile).

E1025: Dowels, installation

THE _____ BARS SHALL BE SET AS DOWELS IN DRILLED HOLES. HOLES ARE TO BE 10" DEEP. THE DOWELS SHALL BE INSTALLED IN ACCORDANCE WITH THE MANUFACTURER'S RECOMMENDATIONS. EITHER OF THE FOLLOWING SYSTEMS MAY BE USED AS A BONDING AGENT FOR VERTICAL DOWELS, BUT ONLY SYSTEM "A" MAY BE USED FOR HORIZONTAL DOWELS:

A. POLYMER GROUT SYSTEM IN ACCORDANCE WITH ARTICLE 2301.03, E, OF THE STANDARD SPECIFICATIONS.

B. HYDRAULIC CEMENT GROUT SYSTEMS. DRILLED HOLES ARE TO BE 2 ½ TIMES THE DOWEL DIAMETER AND ARE TO BE BLOWN CLEAN WITH COMPRESSED AIR IMMEDIATELY PRIOR TO PLACING GROUT. THE HYDRAULIC CEMENT GROUT SHALL BE ONE OF THOSE APPROVED IN MATERIALS I.M. 491.13 AND SHALL BE USED IN ACCORDANCE WITH THE MANUFACTURER'S RECOMMENDATIONS.

Indicate dowel setting procedure on the plans.

E1026: Dowels, cost

THE PRICE BID FOR "STRUCTURAL CONCRETE" SHALL INCLUDE THE COSTS OF SETTING BARS AS DOWELS IN THE _____.

E1030: Sheet pile, material and installation

THE SHEET PILE MATERIAL SHALL MEET THE REQUIREMENTS FOR ASTM A328/A328M OR A572/A572M GRADE 50 STEEL FOR STRENGTH AND WELDABILITY. OTHER SHEET PILE MAY BE USED IN PLACE OF THE ONE DETAILED, BUT THE MINIMUM SECTION MODULUS REQUIRED SHALL NOT BE LESS THAN _____ CU. IN. PER FOOT OF WALL. SHEET PILES SHALL BE DRIVEN TO FULL PENETRATION.

Use this note when sheet pile is a bid item. Note that the ASTM A328/A328M specification has a minimum yield point of 39 ksi, which will control the sheet pile design.

E1036: Deck placement, screed rail location

BRIDGE DECK FINISHING MACHINE SCREED RAILS SHALL NOT BE PLACED ON PREVIOUSLY POURED STAGES OF THE DECK OR ON THE DECKS OF EXISTING STRUCTURES. SCREED RAILS SHALL ORDINARILY BE PLACED ON BEAM OVERHANG FORMWORK OR, WHEN NECESSARY DUE TO SPACE LIMITATIONS, DIRECTLY OVER A BEAM. THE CONTRACTOR IS RESPONSIBLE FOR THE STRUCTURAL ADEQUACY AND FUNCTIONALITY OF THE SUPPORT SYSTEM FOR THE SCREED RAIL AND FINISHING MACHINE.

Include this note on all bridge widening projects and staged construction projects where a deck closure pour is being used. A finishing machine shall not be supported on an existing adjacent deck since differential deflection between the existing deck and the deck being poured will lead to finishing issues in the new deck.

E1040A: Deck placement sequence, steel girder

NOTE: CONCRETE DECK SHALL BE PLACED IN SECTIONS AND SEQUENCES INDICATED. (AN APPROVED ALTERNATE PROCEDURE IS TO PLACE THE CONCRETE DECK IN ONE CONTINUOUS POUR BEGINNING AT ONE END OF THE BRIDGE. << or >> PLACING THE CONCRETE DECK IN ONE CONTINUOUS POUR IS PROHIBITED AND WILL NOT BE CONSIDERED FOR APPROVAL AS AN ALTERNATE PROCEDURE DUE TO << Indicate Reason(s)>>.) ALTERNATE PROCEDURES FOR PLACING DECK CONCRETE MAY BE SUBMITTED FOR APPROVAL TOGETHER WITH A STATEMENT OF THE PROPOSED METHOD AND EVIDENCE THAT THE CONTRACTOR POSSESSES THE NECESSARY EQUIPMENT AND FACILITIES TO ACCOMPLISH THE REQUIRED RESULTS. THE BRIDGE ENGINEER SHALL REVIEW ANY ALTERNATE PROCEDURES. THE COST OF ANY ADDITIONAL ANALYSIS AND PLAN MODIFICATIONS SHALL BE PAID FOR BY THE CONTRACTOR. THE ENGINEER SHALL DETERMINE IF A RETARDING ADMIXTURE IS REQUIRED TO MAINTAIN PLASTICITY OF THE CONCRETE DECK DURING PLACEMENT.

DECK CONCRETE SECTIONS SHALL CURE FOR A MINIMUM OF 48 HOURS AND SHALL ACHIEVE A MINIMUM STRENGTH OF 75% OF THE 28 DAY DECK CONCRETE STRENGTH PRIOR TO REMOVING DECK HEADERS AND BEGINNING AN ADJACENT POUR.

If the total volume of deck concrete is 500 CY or less and the designer has no structural or constructability concerns, then allow the contractor to place the deck in one continuous pour. **Do not explicitly exclude an end-to-end continuous deck pour based on the total volume of deck concrete exceeding 500 CY since larger contractors may want to propose an end-to-end pour as an alternate procedure.** If the continuous deck pour should start at a specific end of the bridge, then modify the note accordingly. If the designer determines a continuous deck pour is not permissible, then explicitly exclude the option in the note with an explanation. The designer must seek approval from the Chief Structural Engineer when a continuous deck pour is specifically prohibited.

If the total volume of deck concrete exceeds 500 CY, then consider allowing a series of sequential pours sized between 300 to 500 CY from one end of the bridge to another in the plan note. See BDM 5.2.4.1.2 and C5.2.4.1.2 for additional information and examples, respectively.

Average deck retarders are pre-approved for about 10 hours. Contractors typically pour concrete decks at a rate of 50 CY per hour which results in the volume limit of 500 CY per pour.

E1040B: Deck placement sequence, steel girder, two span

NOTE: CONCRETE DECK SHALL BE PLACED IN SECTIONS IN THE FOLLOWING SEQUENCES:

A. SECTION 1 AND SECTION 2 SHALL BE PLACED IN THE SAME DAY. HOWEVER, THE SECTION PLACED FIRST MUST REMAIN PLASTIC UNTIL THE OTHER SECTION IS COMPLETELY PLACED.

B. SECTIONS 3, 4 AND 5 MAY NOT BE PLACED UNTIL SECTIONS 1 AND 2 HAVE CURED FOR A MINIMUM OF 48 HOURS AND ACHIEVED A MINIMUM STRENGTH OF 75% OF THE 28 DAY DECK CONCRETE STRENGTH. DECK HEADERS SHALL ONLY BE REMOVED AFTER MEETING THESE REQUIREMENTS.

(AN APPROVED ALTERNATE PROCEDURE IS TO PLACE THE CONCRETE DECK IN ONE CONTINUOUS POUR BEGINNING AT ONE END OF THE BRIDGE. << or >> PLACING THE CONCRETE DECK IN ONE CONTINUOUS POUR IS PROHIBITED AND WILL NOT BE CONSIDERED FOR APPROVAL AS AN ALTERNATE PROCEDURE DUE TO << Indicate Reason(s)>>.) ALTERNATE PROCEDURES FOR PLACING DECK CONCRETE MAY BE SUBMITTED FOR APPROVAL TOGETHER WITH A STATEMENT OF THE PROPOSED METHOD AND EVIDENCE THAT THE CONTRACTOR POSSESSES THE NECESSARY EQUIPMENT AND FACILITIES TO ACCOMPLISH THE REQUIRED RESULTS. THE BRIDGE ENGINEER SHALL REVIEW ANY ALTERNATE PROCEDURES. THE COST OF ANY ADDITIONAL ANALYSIS AND PLAN MODIFICATIONS SHALL BE PAID FOR BY THE CONTRACTOR. THE ENGINEER SHALL DETERMINE IF A RETARDING ADMIXTURE IS REQUIRED TO MAINTAIN PLASTICITY OF THE CONCRETE DECK DURING PLACEMENT.

Use this note on two-span steel bridges with integral abutments. Place positive moment sections first and then the negative moment sections over the piers and abutments. Two-span steel bridges with stub abutments or semi-integral abutments should also use this note, but will exclude sections 3 and 5 at the abutments since those deck areas will be combined with positive moment sections 1 and 2.

If the total volume of deck concrete is 500 CY or less and the designer has no structural or constructability concerns, then allow the contractor to place the deck in one continuous pour. **Do not explicitly exclude an end-to-end continuous deck pour based on the total volume of deck concrete exceeding 500 CY since larger contractors may want to propose an end-to-end pour as an alternate procedure.** If the continuous deck pour

should start at a specific end of the bridge, then modify the note accordingly. If the designer determines a continuous deck pour is not permissible, then explicitly exclude the option in the note with an explanation. The designer must seek approval from the Chief Structural Engineer when a continuous deck pour is specifically prohibited.

If the total volume of deck concrete exceeds 500 CY, then consider accommodating a series of sequential pours sized between 300 to 500 CY in the plan note. See BDM 5.2.4.1.2 and C5.2.4.1.2 for additional information and examples, respectively.

Average deck retarders are pre-approved for about 10 hours. Contractors typically pour concrete decks at a rate of 50 CY per hour which results in the volume limit of 500 CY per pour.

E1040C: Deck placement sequence, steel girder, unbalanced two span

NOTE: CONCRETE DECK SHALL BE PLACED IN SECTIONS IN THE FOLLOWING SEQUENCES:

A. SECTION 1 AND SECTION 2 SHALL BE PLACED IN THE SAME DAY. HOWEVER, DUE TO UPLIFT CONCERNS AT THE _____ END OF THE BRIDGE, SECTION 1 MUST BE PLACED FIRST AND REMAIN PLASTIC UNTIL SECTION 2 IS COMPLETELY PLACED.

B. SECTIONS 3, 4 AND 5 MAY NOT BE PLACED UNTIL SECTIONS 1 AND 2 HAVE CURED FOR A MINIMUM OF 48 HOURS AND ACHIEVED A MINIMUM STRENGTH OF 75% OF THE 28 DAY DECK CONCRETE STRENGTH. DECK HEADERS SHALL ONLY BE REMOVED AFTER MEETING THESE REQUIREMENTS.

(AN APPROVED ALTERNATE PROCEDURE IS TO PLACE THE CONCRETE DECK IN ONE CONTINUOUS POUR BEGINNING AT THE _____ ABUTMENT DUE TO UPLIFT CONCERNS. << or >> PLACING THE CONCRETE DECK IN ONE CONTINUOUS POUR IS PROHIBITED AND WILL NOT BE CONSIDERED FOR APPROVAL AS AN ALTERNATE PROCEDURE DUE TO << Indicate Reason(s)>>.) ALTERNATE PROCEDURES FOR PLACING DECK CONCRETE MAY BE SUBMITTED FOR APPROVAL TOGETHER WITH A STATEMENT OF THE PROPOSED METHOD AND EVIDENCE THAT THE CONTRACTOR POSSESSES THE NECESSARY EQUIPMENT AND FACILITIES TO ACCOMPLISH THE REQUIRED RESULTS. THE BRIDGE ENGINEER SHALL REVIEW ANY ALTERNATE PROCEDURES. ALTERNATE PROCEDURES MUST ADDRESS THE POTENTIAL FOR GRIDER UPLIFT AND WILL, AT A MINIMUM, REQUIRE CERTIFICATION BY A PROFESSIONAL ENGINEER LICENSED IN THE STATE OF IOWA IF POSITIVE RESTRAINTS OR COUNTERWEIGHTS ARE INCORPORATED TO ADDRESS UPLIFT. THE BRIDGE ENGINEER SHALL REVIEW ANY ALTERNATE PROCEDURES. THE COST OF ANY ADDITIONAL ANALYSIS AND PLAN MODIFICATIONS SHALL BE PAID FOR BY THE CONTRACTOR. THE ENGINEER SHALL DETERMINE IF A RETARDING ADMIXTURE IS REQUIRED TO MAINTAIN PLASTICITY OF THE CONCRETE DECK DURING PLACEMENT.

Use this note on a two-span steel bridge where one span is significantly longer than the other span. Place positive moment sections first and then the negative moment sections over the piers and abutments. For the positive moment sections, place concrete in the shorter span first to mitigate uplift. Two-span steel bridges with stub abutments or semi-integral abutments should also use this note, but will exclude sections 3 and 5 at the abutments since those deck areas will be combined with positive moment sections 1 and 2.

If the total volume of deck concrete is 500 CY or less and the designer has no structural or constructability concerns, then allow the contractor to place the deck in one continuous pour. **Do not explicitly exclude an end-to-end continuous deck pour based on the**

total volume of deck concrete exceeding 500 CY since larger contractors may want to propose an end-to-end pour as an alternate procedure. Indicate at which end of the bridge the pour should start. If the designer determines a continuous deck pour is not permissible, then explicitly exclude the option in the note with an explanation. The designer must seek approval from the Chief Structural Engineer when a continuous deck pour is specifically prohibited.

If the total volume of deck concrete exceeds 500 CY, then consider accommodating a series of sequential pours sized between 300 to 500 CY in the plan note. See BDM 5.2.4.1.2 and C5.2.4.1.2 for additional information and examples, respectively.

Average deck retarders are pre-approved for about 10 hours. Contractors typically pour concrete decks at a rate of 50 CY per hour which results in the volume limit of 500 CY per pour.

E1050: Deck drains, material and cost

NOTE: DRAINS ARE TO BE GALVANIZED. x DRAINS REQUIRED. SEE "SITUATION PLAN" FOR LOCATION. WEIGHT = x LBS. PER DRAIN IS BASED ON ROLLED TUBE. COST OF DRAINS TO BE INCLUDED IN PRICE BID FOR "STRUCTURAL CONCRETE".

This note is to be placed near the drain detail, not in the general notes. Include cost of drains in structural concrete unless the project has a structural steel bid item. If the cost of drains is included with structural steel, delete the sentence "COST OF DRAINS IS TO BE INCLUDED IN THE PRICE BID FOR ".

Current continuous concrete slab bridge standards indicate drain weight is based on welded plate and not rolled tube. This may be modified at some future date. Continue to use the slab bridge standards without change.

E1060: Paving block, installation and removal

BEFORE THE CONCRETE PAVING BLOCK IS PLACED, LINE THE NOTCH WITH TARPAPER TO PREVENT BOND. BLOCK IS TO BE REMOVED BEFORE PAVEMENT IS PLACED. PAVING BLOCK MAY BE MADE OF CLASS “C” OR CLASS “D” CONCRETE.

The paving block may not be required if traffic does not impact the bridge end before pavement is placed.

The Bureau recommends placing this note with the paving block detail and deleting it from the abutment notes. Length of paving block sections should be 6 to 8 feet. Paving block length should be rounded down to the nearest six inch interval.

E1070: Reinforcing, pier spiral

NOTE: SPIRAL REINFORCING IS TO BE NO.4 BAR WITH X" DIAMETER 12" PITCH WITH 4 EQUALLY SPACED L 7/8 x 7/8 x 1/8 SPACERS PUNCHED TO HOLD SPIRALS. SPIRALS ARE TO HAVE 1 1/2 EXTRA TURNS AT TOP AND BOTTOM OF COLUMNS.

E1080: Temporary barrier rail, layout

THE PLANS SHOW A LAYOUT FOR TBR FOR BOTH STAGE 1 AND STAGE 2 CONSTRUCTION. THE TEMPORARY BARRIER RAIL SECTIONS ADJACENT TO THE WORK AREA FOR STAGE 1 TRAFFIC ARE TO REMAIN IN PLACE UNTIL TRAFFIC IS SHIFTED TO THE STAGE 2 TRAFFIC LANE. THE TEMPORARY BARRIER RAIL SECTIONS ADJACENT TO THE WORK AREA FOR STAGE 2 TRAFFIC ARE TO BE IN PLACE PRIOR TO SHIFTING TRAFFIC TO THE STAGE 2 TRAFFIC LANE.

Place this note on one of the temporary barrier rail (TBR) plan sheets when TBR is placed adjacent to a large drop-off that may occur in stage construction projects.

The total TBR furnished equals the TBR necessary to protect Stage 1 traffic plus the TBR necessary to protect Stage 2 traffic. All sections are to be tied down, and a suitable detail should be shown.

This note is not required for deck repair projects.

E1085: Conduit, I.T.S. conduit

I.T.S. CONDUIT NOTES:

I.T.S. CONDUIT SHALL BE LIMITED TO SIX 45 DEGREE ELBOW BENDS FOR A CABLE PULL.

RIGID STEEL CONDUIT FOR I.T.S. APPLICATIONS SHALL BE INSTALLED AND PREPARED TO FACILITATE INSTALLATION OF FIBER OPTIC CABLE.

THE MINIMUM INSIDE BEND RADIUS FOR RIGID STEEL CONDUIT USED FOR I.T.S. APPLICATIONS SHALL BE 18 INCHES.

RIGID STEEL CONDUIT FOR I.T.S. APPLICATIONS SHALL BE CUT AND THREADED TO ELIMINATE EXPOSED THREADS AFTER COMPLETING THE CONNECTIONS; ALL COUPLINGS SHALL BE TIGHTENED UNTIL THE CONDUIT ENDS MEET TO ALLOW A CONTINUOUS INNER SURFACE THROUGHOUT THE ENTIRE LENGTH OF THE CONDUIT RUN. NIPPLES SHOULD BE USED TO ELIMINATE CUTTING AND THREADING SHORT LENGTHS OF CONDUIT.

ALL BURRS AND ROUGHENED SURFACES SHALL BE REMOVED FROM CONDUITS AND FITTINGS. ALL CONDUIT RUNS SHALL BE REAMED, CLEANED AND SWABBED FOR INSTALLATION OF FIBER OPTIC CABLE.

ONLY GALVANIZED FITTINGS SHALL BE USED WITH RIGID STEEL CONDUIT. DAMAGED GALVANIZED SURFACES OF RIGID STEEL CONDUIT OR FITTINGS SHALL BE PAINTED WITH AN ACCEPTABLE ZINC-RICH PAINT.

I.T.S. CONDUIT SHALL INCLUDE A POLYPROPYLENE PULL ROPE BETWEEN HANDHOLES WITH A MINIMUM 600 POUND TENSILE STRENGTH.

Separate conduit and junction boxes should be used in the rail when both conductor and I.T.S. communication wires are required. Add this note to lighting details sheet or other appropriate sheet when installing I.T.S. conduit in the rail.

E1090: Beam stirrups, adjustment

NOTE: FOR MODIFIED STIRRUP EXTENSIONS, SEE "BENT BAR DETAILS" AND BEAM DETAIL SHEET FOR DIMENSIONS AND LOCATIONS.

Add this note on beam detail note sheet when increasing the stirrup heights due to haunches more than 2".

E1091: Beam stirrups, extension

NOTE STIRRUP EXTENSION

Add this note on beam elevation detail sheet when haunches are more than 2". This note is to be used in conjunction with note E1090.

13.11 Estimate reference

Reserved

13.11.1 Index

Reserved

13.11.2 Listing

Reserved

C13 CADD Notes

C13.2 Project

C13.2.2 Listing

2011 ~ Increase Class C Concrete Strength to 4.0 ksi

In recent years the typical concrete strengths achieved by Class C concrete have been greater than the 3500 psi used for design. For structural components a higher strength concrete would be advantageous, and for a few of the longer prestressed concrete beams 4.0 ksi concrete is required for the bridge deck. After checking with state and district materials engineers it was decided to increase the design strength for Class C concrete to 4.0 ksi for design, except when a higher strength is required. The increase in design strength also requires an increase in minimum flexural strength to 575 psi for form removal. The change from psi to ksi units for design strength is consistent with the transition to AASHTO LRFD Specifications.

C13.3 New bridge

C13.3.2 Listing

24 March 2005, Revised 6 July 2005 ~ Temporary Shoring Adjacent to Roadway

To help clarify the use of temporary shoring the following guidelines using zones of excavation have been adopted. See also Figure 1. “Temporary Shoring Excavation Classification Line” for details of the temporary shoring limits and zones.

> Zone 1: If room is available for the contractor to temporarily slope the embankment back from the edge of shoulder at a minimum slope of 1.5 to 1, then no submittal for shoring is required. For situations where traffic is shifted to the shoulders, consideration should be given to shoring or slope stability. The temporary slope of 1.5:1 is limited to heights of less than 20 ft. unless a global stability analysis is performed.
>
> Zone 2: When excavation less than 5 ft. is required adjacent to the roadway, shoring shall be provided by the contractor. Shoring plans will be the responsibility of the contractor and shall be submitted for approval. Plan note E171 shall be used. The degree of formal review will be at the judgment of the RCE.
>
> Zone 3: When excavation 5 ft. and more is required adjacent to the roadway, shoring shall be required and a professional engineer shall seal the design. The department will review the design and details for approval. Plan note E172 shall be used. The Lump Sum “Temporary Shoring” bid item shall be used.
>
> Also see the flow chart for the approval process.

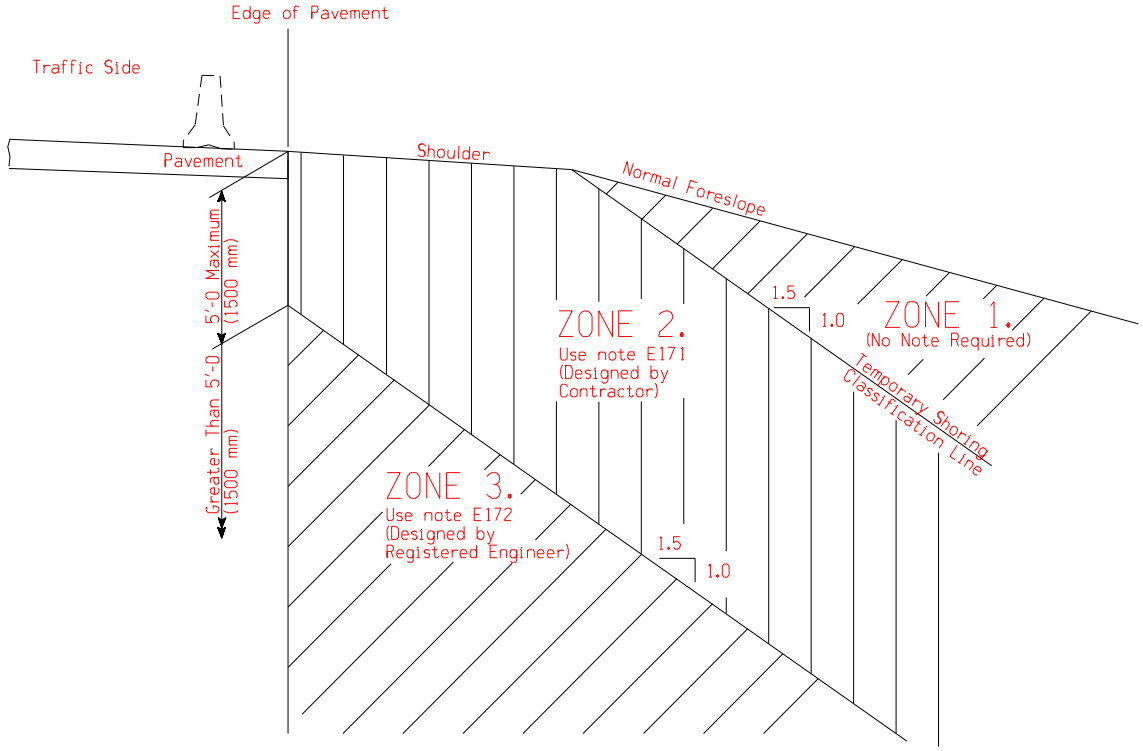

Figure 1. Temporary Shoring Excavation Classification Line

The Soils Design Section, should be the first to review the temporary shoring plans submitted. The Soils Design Section will review the contractor's soils assumption and the applied load generated. The Office of Bridges and Structures will then review the shoring system to verify the loads do not exceed the allowable stresses on the temporary shoring system and will check for adequacy of the details. See Figure 2 for a flowchart of the temporary shoring plan review.

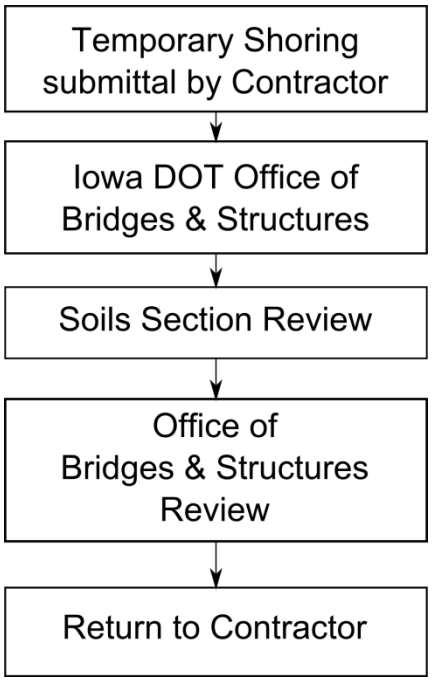

Figure 2 - Temporary Shoring Plan Review Flowchart for Zone 3 approval